PA-18 Drawing Index

File	Drawing	Title	Comments
1		Specification for Airplane USAF L-21A, Pg 1, Cover	
2		Specification for Airplane USAF L-21A, Pg 2, TOC	
3		Specification for Airplane USAF L-21A, Pg 3	
4		Specification for Airplane USAF L-21A, Pg 4	
5		Specification for Airplane USAF L-21A, Pg 5	
6		Specification for Airplane USAF L-21A, Pg 6	
7		Specification for Airplane USAF L-21A, Pg 7	
8		Specification for Airplane USAF L-21A, Pg 8	
9		Specification for Airplane USAF L-21A, Pg 9	
10		Specification for Airplane USAF L-21A, Pg 10	
11		Specification for Airplane USAF L-21A, Pg 11	
12		Specification for Airplane USAF L-21A, Pg 12	
13		Specification for Airplane USAF L-21A, Pg 13	
14		Specification for Airplane USAF L-21A, Pg 14	
15		Specification for Airplane USAF L-21A, Pg 15, Apx A	
16		Specification for Airplane USAF L-21A, Pg 16, Apx B	
17		Specification for Airplane USAF L-21A, Pg 17, Apx B	
18		Specification for Airplane USAF L-21A, Pg 18, Apx C	
19		Specification for Airplane USAF L-21A, Pg 19, Apx I	
20		Report 318, Protective Finish Spec., Cover	
21		Report 318, Protective Finish Spec., Pg 1 of 5	
22		Report 318, Protective Finish Spec., Pg 2 of 5	
23		Report 318, Protective Finish Spec., Pg 3 of 5	
24		Report 318, Protective Finish Spec., Pg 4 of 5	
25		Report 318, Protective Finish Spec., Pg 5 of 5	
26		Report 380, Pg 1	
27		Report 380, Pg 2	
28		Report 380, Addendum 1, Pg 3	
29		Report 380, Addendum 2 & 3, Pg 4	
30		Report 380, Addendum 4, Pg 5	
31		Report 380, Addendum 5, Pg 6	
32		Report 380, Addendum 6, Pg 7	
33		Report 380, Addendum 6, Pg 8	
34		Report 380, Addendum 6, Pg 9	
35		Report 380, Addendum 6, Pg 10	
36		Report 380, Addendum 7, Pg 11	
37		Report 380, Addendum 7, Pg 12	
38	**10016**	Strips - Felt (Sheet 3)	

39	**10021**	Gusset - Strut Point "N" Brace	
40	**10024**	Brake Assy - 5 x 1 Hayes Expander Tube	
41	**10024**	Brake Assy - 5 x 1 Hayes Expander Tube	
42	**10031**	Former - Wing Rib Aileron False Spar	
43	**10032**	Vee Assembly - Covered Landing Gear	
44	**10033**	Vee Assembly - Landing Gear	
45	**10034**	Line Assembly - Brake	
46	**10049**	Trimstrip	
47	**10050**	Door Assembly - Enclosure Upper	
48	**10061**	Channel - Window	
49	**10062**	Foot - Rear Drag Strut	
50	**10072**	Foot - Front Drag Strut	
51	**10081**	Clip	
52	**10096**	Strut Assembly - Rear Lift	
53	**10097**	Section - Rear Lift Strut	
54	**10098**	Strut Assembly - Front Lift	
55	**10098**	Strut Assembly - Front Lift	
56	**10099**	Section - Front Lift Strut	
57	**10099**	Section - Front Lift Strut	
58	**10100**	Plate - Front Lift Strut End	
59	**10112**	Tubes - Drag Strut	
60	**10118**	Cover Assembly - Fuel Tank	
61	**10128**	Wire Assembly - Single	
62	**10128**	Wire Assembly - Single	
63	**10134**	Channel - Brake Unit Support	
64	**10143**	Tube Assembly	
65	**10143**	Tube Assembly	
66	**10151**	Plate - Lock	
67	**10161**	Fitting - Type 1 Drag Wire Pull	
68	**10168**	Baffle Assembly - Engine Right Rear	
69	**10171**	Fitting - Type 2 Drag Wire Pull	
70	**10175**	Bracket - Rear Baffle	
71	**10189**	Cowl Assembly - Engine Nose	
72	**10192**	Contour - Engine Nose Cowl	
73	**10192**	Contour - Engine Nose Cowl	
74	**10201**	Nipple - #6-40 Tie Rod	
75	**10221**	Clevis - Tie Rod	
76	**10289**	Wire Assembly - Ignition	
77	**10291**	Angle - Rear Spar	

78	**10292**	Grommet	
79	**10293**	Grommet	
80	**10300**	Hinge	
81	**10302**	Hinge Assembly	
82	**10400**	Take Off Assembly - Air	
83	**10401**	Fitting - Front Spar Butt Hinge	
84	**10415**	Support - Baffle Hanger	
85	**10438**	Jumper - Fuse Terminal	
86	**10449**	Link - Elevator Horn Upper	
87	**10466**	Clamp - Round	
88	**10466**	Clamp - Round	
89	**10487**	Rod - Engine Baffle Tie	
90	**10525**	Hose - Air Duct	
91	**10531**	Plate - Wing Fabric Former	
92	**10541**	Plate - Reinforcement	
93	**10546**	Stringer - Fuselage Side	
94	**10548**	Wheel Assembly - 8.00 X 4	
95	**10548**	Wheel Assembly - 8.00 X 4	
96	**10549**	Brake Assembly	
97	**10550**	Vee Assembly - Landing Gear Complete	
98	**10551**	Vee Assembly - Cabane (Complete)	
99	**10552**	Housing Assembly - Pulley	
100	**10554**	Tube Assembly - Airspeed	
101	**10555**	Wire Assembly - Upper Tail Brace	
102	**10556**	Wire Assembly - Lower Tail Brace	
103	**10562**	Tubes - Fuselage	
104	**10562**	Tubes - Fuselage	
105	**10565**	Bracket Assembly - Fuselage Throttle	
106	**10565**	Bracket Assembly - Fuselage Throttle	
107	**10566**	Cover Assembly - Shock Cord	
108	**10567**	Plate - Shock Cord Cover End	
109	**10568**	Guide - Throttle Lever	
110	**10569**	Tube Assembly	
111	**10570**	Tube Assembly	
112	**10571**	Tube Assembly	
113	**10572**	Longeron Assembly	
114	**10574**	Tube - Fuselage	
115	**10613**	Channel - Fuselage Side	
116	**10614**	Channel - Fuselage Bottom	

117	**10630**	Cover Assembly - Leading Edge	
118	**10631**	Cover - Leading Edge	
119	**10631**	Cover - Leading Edge	
120	**10634**	Rib Assembly - Wing Full	
121	**10635**	Rib Assembly - Wing	
122	**10636**	Angle - Fuel Tank Cover Support	
123	**10639**	Reinforcement - Capstrip	
124	**10640**	Brace - Wing Rib Angle	
125	**10641**	Tube - Drag Brace	
126	**10643**	Bracket - Pulley	
127	**10644**	Bracket Assembly - Pulley	
128	**10645**	Strut Installation - #2 Drag	
129	**10648**	Strap Assembly - Front Fuel Tank	
130	**10649**	Strap Assembly - Rear Fuel Tank	
131	**10650**	Strap - Fuel Tank	
132	**10653**	Rib Assembly - Wing Full	
133	**10654**	Clamp Assembly - Front Strut Jury Strut	
134	**10655**	Clamp - Front Lift Strut	
135	**10656**	Clamp - Rear Strut Jury Strut	
136	**10657**	Cover Assembly - Fuel Tank	
137	**10668**	Trimstrip	
138	**10703**	Bracket Assembly - Aileron Hinge	
139	**10705**	Pull Assembly - Drag Wire	
140	**10706**	Pull Assembly - Drag Wire	
141	**10707**	Pull Assembly - Drag Wire	
142	**10709**	Pull Assembly - Drag Wire	
143	**10710**	Fittings Installation - Wing Butt Rear Spar	
144	**10711**	Pull Assembly - Drag Wire	
145	**10725**	Tank Assembly - Header	
146	**10725**	Tank Assembly - Header	
147	**10729**	Line Assembly - Fuel	
148	**10734**	Pedal Assembly - Front Brake	
149	**10737**	Floorboard - Front	
150	**10737**	Floorboard - Front	
151	**10738**	Floorboard - Rear	
152	**10738**	Floorboard - Rear	
153	**10741**	Section - Front Spar	
154	**10742**	Rib Assembly - Wing Tip	
155	**10743**	Section - Rear Spar	

156	**10748**	Grommet	
157	**10758**	Fitting - Fuel Tank Drain	
158	**10763**	Cushion Assembly - Rear Seat Bottom	
159	**10769**	Pedals Installation - Rudder	
160	**10776**	Panel - Cockpit Left Front	
161	**10784**	Lug - Cockpit Panel Attachment	
162	**10785**	Lug - Cockpit Panel Attachment	
163	**10792**	Firewall Assembly	
164	**10795**	Angle - Fuselage Cowl Reinforcement	
165	**10799**	Floorboard Assembly - Rear	
166	**10804**	Gage Assembly - Fuel	
167	**10818**	Tube - Rear Seat Back	
168	**10831**	Reinforcement - Rib Capstrip	
169	**10834**	Elbow	
170	**10836**	Screw - Drilled Head Cap	
171	**10837**	Gage - Fuel	
172	**10841**	Fitting - Trailing Edge Rib Bow Attachment	
173	**10847**	Bushing - Fuel Gage	
174	**10849**	Tank Assembly 1 of 2	
175	**10849**	Tank Assembly 2 of 2	
176	**10851**	Fitting - Leading Edge Rib Bow Attachment	
177	**10852**	Tube - Fuel Gage	
178	**10853**	Float - Fuel Gage	
179	**10865**	Cable Assembly - Rudder	
180	**10866**	Fitting Assembly - Rudder Cable Front	
181	**10867**	Fitting Assembly - Rudder Cable Center	
182	**10868**	Fitting Assembly - Rudder Cable Rear	
183	**10870**	Cable Assembly - Elevator	
184	**10906**	Bracket	
185	**10907**	Rib Assembly - Wing Full	
186	**10908**	Rib Assembly - Wing Full	
187	**10909**	Fitting	
188	**10911**	Knob Assembly	
189	**10912**	Bracket Assembly - Aileron Long Hinge	
190	**10914**	Connector - Hose	
191	**10921**	Block - Aileron Hinge Bearing	
192	**10930**	Panel - Cockpit Right Center	
193	**10931**	Clamp - Aileron Hinge Bracket False Spar	
194	**10932**	Panel - Cockpit Right Center (Flat Pattern)	

195	**10933**	Blanket - Fuselage Cowl Insulator	
196	**10934**	Blanket - Firewall Insulator	
197	**10936**	Plate - Stabilizer Indicator Cover	
198	**10940**	Spring - Bungee	
199	**10984**	Grommet	
200	**10985**	Bushing - Cable Attachment	
201	**10997**	Channel - Fuselage Stringer	
202	**10998**	Stringer - Fuselage Bottom	
203	**10999**	Spring - Tail Wheel	
204	**11015**	Placard - Starter	
205	**11034**	Cover Assembly - Drag Brace Tube	
206	**11122**	Cable Assembly - Battery Ground	
207	**11134**	Cable Assembly - Battery	
208	**11141**	Plate - Wing Rib Fairlead Bracket	
209	**11151**	Plate - Wing Rib Fairlead Bracket U	
210	**11200**	Pulley	
211	**11207**	Guard - Cable	
212	**11299**	Clamp Assembly	
213	**11300**	Line Assembly - Fuel	
214	**11321**	Fork - Lift Strut	
215	**11382**	Primer Assembly	
216	**11383**	Valve Assembly - Fuel	
217	**11390**	Jumper - Circuit Breaker	
218	**11408**	Angle	
219	**11420**	Link - Seat Spring	
220	**11422**	Plate - Insulator	
221	**11428**	Section - Weatherstrip Channel	
222	**11432**	Channel - Weatherstrip	
223	**11441**	Plate - Front Lift Strut Leading Edge End	
224	**11455**	Angle Assembly - Wing Root Fairing Attachment	
225	**11463**	Angle - Wing Root Fairing Attachment	
226	**11473**	Plate - Rectangular	
227	**11496**	Scoop - Bottom Cowl Air	
228	**11501**	Plate - Lift Strut Reinforcing	
229	**11511**	Plate - Rear Lift Strut Leading Edge Reinforcing	
230	**11523**	Fairing Assembly - Wing Root Upper	
231	**11535**	Channel - Fuselage	
232	**11546**	Channel - Fuselage Window Bottom	
233	**11555**	Channel - Fuselage Top Deck	

234	**11568**	Lugs - Attachment	
235	**11648**	Channel - Weatherstrip	
236	**11670**	Spar - Wing False	
237	**11672**	Bracket - Flap Bellcrank	
238	**11675**	Angle - Spar Reinforcement	
239	**11676**	Plate- Flap Hinge Reinforcement	
240	**11677**	Rod - Flap Control	
241	**11678**	Stop - Flap Bellcrank	
242	**11679**	Hinge - Flap Outboard	
243	**11680**	Hinge - Flap Inboard	
244	**11682**	Hinge Assembly - Flap Inboard	
245	**11683**	Cover - Flap Leading Edge	
246	**11684**	Edge Assembly - Flap Trailing	
247	**11692**	Bracket - Pulley	
248	**11694**	Cable Assembly - Flap Return	
249	**11697**	Lever Assembly - Flap Control	
250	**11699**	Plunger Assembly - Flap Control	
251	**11700**	Pawl - Flap Control Plunger	
252	**11718**	Block Assembly - Fuse	
253	**11719**	Plate Assembly - Wing Butt Rib	
254	**11821**	Fitting - Fuselage Rear Wing Hinge	
255	**11829**	Plate - Safety Belt Attachment	
256	**11857**	Tubes	
257	**11882**	Holder - Control Stick	
258	**11943**	Reinforcement - Baffle	
259	**11950**	Box Assembly - Carburetor Air	
260	**11957**	Tube - Engine Breather	
261	**11973**	Line Assembly - Fuel	
262	**11982**	Brace - Rib	
263	**11987**	Tube Assemblies	
264	**11991**	Capstrip - Rib	
265	**11994**	Gussets	
266	**12021**	Guard - Cable	
267	**12028**	Channel - False Spar Reinforcement	
268	**12033**	Angle - Battery Box Attachment	
269	**12044**	Box Assembly - Battery	
270	**12045**	Lid Assembly - Battery Box	
271	**12056**	Clamp - Aileron Hinge Bracket	
272	**12079**	Lever Assembly - Seat Catch	

273	**12086**	Frame Assembly - Left Front Seat	
274	**12117**	Clip - Serial Number Placard Attachment	
275	**12122**	Lug - Seat Lever Guide	
276	**12177**	Wire Assemblies Single	
277	**12178**	Tube - Fuselage Seat	
278	**12179**	Bracket - Pulley	
279	**12180**	Bracket - Pulley Housing Support	
280	**12183**	Frame Assembly - Fuselage	
281	**12183**	Frame Assembly - Fuselage (cleaned up)	
282	**12184**	Fitting Installation - Landing Gear & Lift Strut	
283	**12200**	Channel - Fuselage	
284	**12202**	Channel - Fuselage	
285	**12203**	Channel - Fuselage	
286	**12204**	Channel - Window	
287	**12205**	Channel - U	
288	**12206**	Channel - Fuselage	
289	**12207**	Tube - Top Deck Former	
290	**12210**	Plate - Reinforcement	
291	**12211**	Plate - "U"	
292	**12213**	Bracket Assembly - Engine Mount Attachment	
293	**12224**	Fittings Installation Front Spar Butt	
294	**12234**	Bracket - Pulley	
295	**12234**	Bracket - Pulley	
296	**12237**	Control Installation - Elevator and Aileron	
297	**12241**	Guard - Pulley	
298	**12244**	Back Assembly - Rear Seat	
299	**12249**	Window - Top Deck Front	
300	**12250**	Window - Topdeck Rear	
301	**12251**	Window - Enclosure Rear	
302	**12252**	Braces - Wing Channel	
303	**12253**	Window - Enclosure Front	
304	**12254**	Window Assembly - Front Sliding	
305	**12255**	Window Assembly - Rear Sliding	
306	**12256**	Door Assembly - Enclosure Upper	
307	**12257**	Frame Assembly - Enclosure Lower Door	
308	**12258**	Trimstrip - Window	
309	**12259**	Trimstrip - Window	
310	**12260**	Trimstrip - Window	
311	**12261**	Trimstrip - Window	

312	**12263**	Bungee Installation	
313	**12264**	Trimstrip	
314	**12265**	Trimstrip - Top Deck	
315	**12266**	Strip - Molding Attachment	
316	**12267**	Frame Assembly - Front Seat	
317	**12268**	Base Assembly - Front Seat	
318	**12269**	Lever - Front Seat Catch	
319	**12274**	Fairing - Lower Wing Root	
320	**12275**	Fairing Assembly - Lower Rear Wing Root	
321	**12276**	Fairing Assembly - Front Wing Root	
322	**12279**	Window - Enclosure Door	
323	**12284**	Panel - Baggage Compartment Lower	
324	**12286**	Canvas Assembly - Rear Seat Bottom	
325	**12287**	Canvas Assembly - Rear Seat Back	
326	**12289**	Cushion Assembly - Rear Seat Back	
327	**12290**	Canvas Assembly - Front Seat	
328	**12293**	Cushion Assembly - Front Seat Back	
329	**12294**	Cushion Assembly - Front Seat Bottom	
330	**12295**	Panel - Switch	
331	**12296**	Panel Assembly - Switch	
332	**12298**	Harness Assembly - Wire	
333	**12299**	Harness Assembly - Wire	
334	**12304**	Fabric Installation - Fuselage	
335	**12309**	Panel Assembly - Cockpit Left Top	
336	**12311**	Panel - Cockpit Right Front	
337	**12314**	Panel Assembly - Cockpit Top Rear	
338	**12314**	Panel Assembly - Cockpit Top Rear	
339	**12315**	Box Assembly - Cabin Heat	
340	**12331**	Edge Attachment - Wing Butt Rib Leading	
341	**12345**	Fitting Assembly - Tie Down	
342	**12350**	Tube - Engine Cowl Support	
343	**12351**	Mount Assembly - Engine	
344	**12353**	Box Assembly - Cabin Heat	
345	**12354**	Muffler Assembly (Lycoming Special)	
346	**12355**	Cowl Assembly - Engine Nose	
347	**12356**	Cowl Assembly - Engine Top	
348	**12357**	Cowl Assembly - Engine Bottom	
349	**12358**	Cowl Assembly - Engine Side	
350	**12359**	Channel - Cowl Reinforcement	

351	**12360**	Stud - Cowl Stop	
352	**12362**	Channel Assembly - Cowl Upper Mounting	
353	**12364**	Channel Assembly - Cowl Lower Mounting	
354	**12365**	Firewall Assembly	
355	**12366**	Cowl - Fuselage	
356	**12367**	Baffle Assembly - Engine Right Rear	
357	**12368**	Baffle Assembly - Engine Left Rear	
358	**12369**	Plate - Engine Baffle	
359	**12370**	Plate - Engine Baffle	
360	**12375**	Tube - Air Take-Off	
361	**12377**	Strip - Windshield Front Attachment	
362	**12378**	Strip - Windshield Rear Attachment	
363	**12379**	Angle - Cowl Channel Attachment	
364	**12381**	Cowl Assembly - Fuselage	
365	**12399**	Window - Top Deck Rear (Flat Pattern)	
366	**12400**	Switch Assembly - Ignition (Shielded)	
367	**12402**	Cover Assembly - Ignition Switch	
368	**12403**	Stick Assembly - Control	
369	**12406**	Gage Assembly - Oil Temperature and Pressure	
370	**12407**	Clamp Assembly	
371	**12408**	Clamp Assembly	
372	**12409**	Lug - Engine Stop Attachment	
373	**12410**	Channel - Engine Stop	
374	**12411**	Channel Assembly - Engine Stop	
375	**12413**	Drift	
376	**12414**	Tube Cowl Stop	
377	**12415**	Clip	
378	**12422**	Attachment - Aileron & Wing Trailing Edge	
379	**12424**	Baffle Assembly - Engine Right Side Rear	
380	**12425**	Baffle Assembly - Engine Right Side Front	
381	**12426**	Baffle Assembly - Engine Left Side Front	
382	**12427**	Baffle Assembly - Engine Left Side Rear	
383	**12428**	Baffle Assembly - Engine Left Front	
384	**12430**	Windshield	
385	**12431**	Clamp - Lift Strut Fairlead	
386	**12432**	Windshield (Flat Pattern)	
387	**12433**	Muffler Assembly	
388	**12436**	Shroud Assembly - Muffler	
389	**12437**	Muffler Assembly (Complete)	

390	12437	Muffler Assembly (Complete)	
391	12437	Muffler Assembly (Complete)	
392	12438	Plate Assembly - Muffler Baffle	
393	12439	Plate - Tailpipe Shroud End	
394	12440	Plate - Cabin Air Inlet	
395	12443	Panel - Baggage Compartment Rear	
396	12444	Panel - Cockpit Left Rear	
397	12445	Panel - Cockpit Right Rear	
398	12446	Fuselage Frame - Superstructure Assembly	
399	12447	Powerplant 125hp-135hp Engine	
400	12451	Tape Installation - Wing Rib Center	
401	12457	Stack Assembly - Exhaust	
402	12458	System Installation - Fuel	
403	12461	Tape Installation - Wing Rib Nose	
404	12478	Spar - Flap	
405	12499	Guard - Cable	
406	12521	Barrel Assembly - Lift Strut	
407	12524	Bracket - Landing Light Mounting	
408	12525	Plate - Landing Light Attachment	
409	12527	Plate - Landing Light Mounting	
410	12529	Plate - Rib Reinforcement	
411	12532	Window - Landing Light	
412	12533	Strip - Landing Light Window Attachment	
413	12540	Plate - Engine Cowl Air Vent	
414	12541	Flange - Engine Cowl Air Vent	
415	12543	Scoop - Engine Cowl Air	
416	12551	End Plate Assembly - Front Lift Strut	
417	12560	Bracket Assembly - Navigation Light	
418	12570	Cover Assembly - Fuel Tank	
419	12571	Struts - Wing Jury	
420	12573	Rudder Assembly - Covered	
421	12581	Fitting - Spar Jury Strut	
422	12590	Channel - 3/8 Superstructure (Sheet III)	
423	12591	Tube - Jury Strut Spacer	
424	12617	Panel - Cockpit Upper Left Trim	
425	12618	Panel - Cockpit Upper Right Trim	
426	12619	Screw - #10-32 Machine (Special)	
427	12641	Gusset - Wing Tip Nose Rib	
428	12642	Cushion Assembly - Front Seat Back	

429	**12651**	Bracket - Antenna Mast	
430	**12662**	Rib Assembly - Wing Nose	
431	**12694**	Control Assembly - Throttle	
432	**12707**	Cup - Cowl Fastener	
433	**12723**	Fastener Assembly - Cowl	
434	**12741**	Spring - Drag Wire Inspection Cover Plate	
435	**12749**	Baffle Assembly - Engine Right Front	
436	**12750**	Angle - Baffle Reinforcement	
437	**12751**	Plate - Inspection Opening Cover	
438	**12761**	Cover Assembly - Drag Wire Inspection	
440	**12762**	Hose Assembly	
441	**12764**	Bowl Assembly - Fuel Strainer	
442	**12767**	Fitting Assembly - Fuselage Front Wing Hinge	
443	**12768**	Flap Assembly	
444	**12769**	Stabilizer Assembly	
445	**12770**	Elevator Assembly	
446	**12773**	Flap Assembly - Covered	
447	**12774**	Lever Assembly - Flap Control (Complete)	
448	**12775**	Lever Assembly - Flap Control	
449	**12776**	Ratchet - Flap Lever	
450	**12777**	Lug Assembly - Flap Lever	
451	**12779**	Wing Assembly - Covered	
452	**12780**	Bearing Assembly - Pulley	
453	**12782**	Channel Assembly - Pulley Mounting	
454	**12784**	Spar Assembly - Wing Inboard False	
455	**12789**	Elevator Assembly - Covered	
456	**12790**	Stabilizer Assembly - Covered	
457	**12793**	Link - Flap Cable	
458	**12794**	Cable Assembly - Flap	
459	**12795**	Fairing - Flap	
460	**12796**	Channel - Fuselage Top Deck	
461	**12797**	Plate - Oil Cooler Lock	
462	**12798**	Spring - Tailwheel Steering	
463	**12806**	Fitting - Fuel Tank	
464	**12807**	Panel - Landing Light Switch	
465	**12810**	Cover - Pulley	
466	**12812**	Panel Assembly - Landing Light Switch	
467	**12818**	Panel - Fuselage Trim	
468	**12834**	Clip Assembly - Fuel Line	

469	**12835**	Plate - Fuel Valve Mounting	
470	**12836**	Clamp Assembly - Header Tank	
471	**12837**	Tank Assembly - Header	
472	**12838**	Plate - Fuel Valve	
473	**12839**	Canvas Assembly - Seat Back	
474	**12840**	Angle - Fuselage Cowl Reinforcement	
475	**12844**	Tube Assembly - Shock Strut	
476	**12845**	Fitting Assembly - Shock Strut End	
477	**12847**	Bracket Assembly - Door Catch Mounting	
478	**12855**	Lock Assembly - Control Stick	
479	**12857**	Pointer - Fuel Valve	
480	**12861**	Wires - Wing Drag	
481	**12875**	Fitting Assembly - Shock Strut End	
482	**12881**	Former - Wing Rib Aileron False Spar	
483	**12898**	Light Assembly - Cockpit	
484	**12902**	Rib Assembly - Wing Aileron Outboard	
485	**12914**	Pin - Seat Stop	
486	**12931**	Strut Assembly Left Front Jury	
487	**12944**	Channel - Floorboard Reinforcement	
488	**12958**	Case Assembly - Data	
489	**12964**	Bracket - Oil Cooler Mounting	
490	**12965**	Axle Assembly - Landing Gear	
491	**12982**	Pulley	
492	**12983**	Pulley	
493	**12993**	Bracket - Pulley	
494	**12995**	Guard Cable	
495	**12998**	Strut Assembly - Shock	
496	**12999**	Crank Installation - Stabilizer Adjustment	
497	**13000**	Yoke Installation - Stabilizer Adjustment	
498	**13003**	Tube - Tailpipe Support	
499	**13022**	Rib Assembly - Wing Three Quarter	
500	**13029**	Cowl Assembly - Engine Side	
501	**13030**	Strips - Nose Cowl Reinforcement	
502	**13042**	Rib Assembly - Wing Aileron Inboard	
503	**13052**	Rib Assembly - Wing Full	
504	**13072**	Cover - Wing Leading Edge	
505	**13099**	Scoop - Bottom Cowl Air	
506	**13126**	Rod - Shoulder Harness Guide	
507	**13127**	Keeper - Shoulder Harness Strap	

508	**13128**	Strap Assembly - Shoulder Harness	
509	**13129**	Strap Assembly - Shoulder Harness (Complete)	
510	**13131**	Brace Assembly - Aileron False Spar	
511	**13166**	Cap Assembly - Fuel Tank	
512	**13171**	Gusset - Wing False Spar	
513	**13177**	Channel - Fuselage	
514	**13178**	Board - Battery Mounting	
515	**13179**	Frame Assembly - Battery Access Door	
516	**13180**	Door Assembly - Battery Access	
517	**13182**	Box Assembly - Battery	
518	**13204**	Valve Assembly - Carburetor Air Box	
519	**13205**	Arm Assembly - Air Box Control	
520	**13206**	Bushing Assembly - Airbox	
521	**13207**	Plate Assembly - Air Box Ratchet	
522	**13208**	Box Assembly - Carburetor Air	
523	**13241**	Bolt - Lift Strut Fork	
524	**13300**	Bracket Assembly - Shoulder Harness Attachment	
525	**13305**	Clamp - Square Offset	
526	**13332**	Take-Off Assembly - Air	
527	**13334**	Scoop Assembly - Air	
528	**13363**	Panel Assembly - Covered Wing	
529	**13373**	Plate - Fuselage Cowl Trim	
530	**13375**	Marking Details - L-21A Airplane	
531	**13380**	Floorboards Installation	
532	**13382**	Box - Carburetor Heat Control	
533	**13383**	Panel Assembly - Ignition Switch	
534	**13384**	Panel Assembly - Cockpit Left	
535	**13385**	Gear Installation - Landing	
536	**13386**	Surfaces Installation - Tail	
537	**13387**	Wing Installation	
538	**13388**	Fuselage Assembly (Complete)	
539	**13389**	Rigging Diagram	
540	**13392**	Boot Assembly - Control Stick	
541	**13393**	Handle Assembly - Outside Door	
542	**13394**	Plate- Door Handle Trim	
543	**13396**	Light Installation - Landing	
544	**13397**	Handle Assembly - Inside Door	
545	**13398**	Panel Installation Instrument	
546	**13399**	Brake Installation	

547	**13400**	L-21A Complete Airplane	
548	**13402**	Seats Installation	
549	**13403**	Deck Installation	
550	**13404**	System Installation - Electrical	
551	**13405**	Strut Installation - Lift & Jury	
552	**13406**	Wire Installation - Navigation Light	
553	**13407**	Clip - Clamp Mounting	
554	**13408**	Plate - Flexible Control Lock	
555	**13410**	Deck	
556	**13412**	Stick Assembly - Control	
557	**13413**	Panel - Instrument	
558	**13414**	Indicator Assembly - Air Speed	
559	**13415**	Tachometer Assembly	
560	**13417**	Link	
561	**13422**	Holder Assembly - Airplane Checklist	
	13424	Plate - Pilot's Checklist	Drawing Not Available
562	**13541**	Tubing - Airspeed	
563	**13814**	Rib Outline - Wing Full	
564	**14161**	Fitting - Rear Spar Butt Hinge	
565	**14172**	Fitting - Front Spar Lift Strut	
566	**14182**	Fitting - Rear Spar Lift Strut	
567	**14192**	Fitting Assembly - Front Spar Lift Strut	
568	**14222**	Strut Assemblies - Drag	
569	**14232**	Strut Assembly - #1 Drag	
570	**14242**	Strut Installation - #5 Drag	
571	**14252**	Strut Installation - #2 or #3 Drag	
572	**14261**	Fitting - Aileron Pulley Bracket Attachment	
573	**14271**	Block - Rear Spar Lift Strut Fitting Filler	
574	**14283**	Fitting Installation - Rear Spar Lift Strut	
575	**14291**	Angle - Center Aileron Hinge Bracket Attachment	
576	**14323**	Bow Installation - Wing Tip	
577	**14351**	Tape Installation - Wing Rib Nose	
578	**14361**	Angle - Jury Strut Fitting Attachment	
579	**14371**	Block - Jury Strut Fitting Filler	
580	**14383**	Spar - Front	
581	**14393**	Spar Installation - Wing False	
582	**14394**	Panel Assembly - Wing	
583	**14401**	Angle - Front Spar	
584	**14411**	Angle - Rear Spar	

585	**14433**	Fittings Installation - Front Spar Lift Strut	
586	**14453**	Spar - Rear	
587	**14461**	Block - Front Spar Fitting Lift Strut Filler	
588	**14481**	Fork Assembly - Lift Strut	
589	**14541**	Brace Assembly - Aileron False Spar	
590	**14571**	Angle - Aileron Pulley Bracket Attach	
591	**14581**	Stop Assembly - Aileron Horn	
592	**14592**	Stop Installation - Aileron Horn	
593	**14611**	Bracket - Aileron Pulley (Inboard Half)	
594	**14621**	Bracket - Aileron Pulley (Outboard Half)	
595	**14642**	Outline - Nose Plate	
596	**14881**	Cover Inst. - Wing Pulley	
597	**14941**	Wire Assemblies Wing Drag	
598	**15041**	Brace - Wing Rib #1 Vertical	
599	**15051**	Brace - Wing Rib #4 Vertical	
600	**15061**	Brace - Wing Rib #5 Vertical	
601	**15101**	Brace - Wing Rib #1 Diagonal	
602	**15111**	Brace - Wing Rib #2 Diagonal	
603	**15121**	Brace - Wing Rib #3 Diagonal	
604	**15132**	Brace - Wing Rib #4 Diagonal	
605	**15141**	Brace - Wing Rib #5 Diagonal	
606	**15151**	Brace - Wing Rib #6 Diagonal	
607	**15161**	Brace - Wing Rib #7 Diagonal	
608	**15171**	Brace - Wing Rib #8 Diagonal	
609	**15191**	Brace - Wing Rib #1 Angle	
610	**15201**	Brace - Wing Rib # 2 Angle	
611	**15211**	Brace - Wing Rib #3 Angle	
612	**15221**	Brace - Wing Rib #4 Angle	
613	**15262**	Capstrip - Wing Three Quarter Rib	
614	**15272**	Capstrip - Wing Aileron Outboard Rib	
615	**15272**	Capstrip - Wing Aileron Outboard Rib	
616	**15311**	Brace - Wing Rib Special 3/4 Rib #1 Angle	
617	**15321**	Brace - Wing Rib Special 3/4 Rib #2 Angle	
618	**15382**	Capstrip - Wing Nose Rib	
619	**15403**	Brace Assembly - Strut Point "N"	
620	**15482**	Cover - Leading Edge Center	
621	**15562**	Spar - Wing False (Inboard Section)	
622	**15572**	Spar - Wing False (Outboard Section)	
623	**15581**	Brace - Aileron False Spar	

624	**15631**	Spacers - Lift Strut Fitting	
625	**15641**	Plug - Drag Strut	
626	**15712**	Rib Assembly - Wing Nose (Special)	
627			skipped number - not missing print
628	**15723**	Cover - Wing Tip Leading Edge	
629	**15731**	Brace - Nose Rib Diagonal	
630	**15742**	Reinforcement - Wing Leading Edge	
631	**15761**	Reinforcement - Wing Fabric	
632	**15844**	Capstrip - Wing Tip Rib	
633	**15844**	Capstrip - Wing Tip Rib	
634	**15851**	Brace - Wing Tip Rib #1 Diagonal	
635	**15861**	Brace - Wing Tip Rib #2 Diagonal	
636	**15871**	Brace - Wing Tip Rib #3 Diagonal	
637	**15881**	Brace - Wing Tip Rib #4 Diagonal	
638	**15891**	Brace - Wing Tip Rib #5 Diagonal	
639	**15901**	Brace - Wing Tip Rib #6 Diagonal	
640	**15911**	Brace - Wing Tip Rib #3 Vertical	
641	**15921**	Brace - Wing Tip Rib #4 Vertical	
642	**15931**	Brace - Wing Tip Rib #1 Angle	
643	**15941**	Brace - Wing Tip Rib #2 Angle	
644	**15951**	Brace - Wing Tip Rib #3 Angle	
645	**15961**	Brace - Wing Tip Rib #4 Angle	
646	**15991**	Brace - Wing Tip Rib #5 Diagonal	
647	**16011**	Brace - Wing Rib #4 Vertical	
648	**16131**	Brace - Wing Rib Angle (Special)	
649	**16141**	Brace - Wing Rib Angle (Special)	
650	**16151**	Brace - Wing Rib Angle (Special)	
651	**16162**	Capstrip - Wing Tip Nose Rib	
652	**16171**	Brace - Wing Tip Nose Rib Angle	
653	**16181**	Brace - Wing Tip Nose Rib Diagonal	
654	**16192**	Rib Assembly - Wing Tip Nose	
655			skipped number - not missing print
656	**16262**	Bow -Wing Tip	
657	**16462**	Tube Assembly - "N" Brace Upper	
658	**16472**	Tube Assembly - "N" Brace Lower	
659	**16551**	Fitting - Front Spar Bow Rear	
660	**16561**	Fitting - Front Spar Bow Front	
661	**16601**	Fitting - Rear Spar Bow Front	
662	**16611**	Fitting - Rear Spar Bow Rear	

663	**16621**	Section - Wing Rib Repair	
664	**16631**	Capstrip - Wing Rib Repair Section	
665			skipped number - not missing print
666	**16643**	Repairs - Rib	
667	**16651**	Reinforcement - Rib Repair	
668	**20151**	Fitting - Fuselage Wing Hinge "U"	
669	**20383**	Bracket Assembly - Fuselage Throttle	
670	**20391**	Clamp - Fairing Strip	
671	**20491**	Bearing Installation - Stab Screw Upper	
672	**20611**	Fitting - Fuselage Tailskid Rear	
673	**20631**	Fitting - Fuselage Tailskid Front "U"	
674	**20642**	Fittings Installation - Fuselage Tail	
675			skipped number - not missing print
676	**20652**	Handle Installation - Lifting	
677	**20671**	Fitting - Fuselage Lift Strut	
678	**20681**	Fitting - Fuselage Rear Landing Gear	
679	**20741**	Bracket - Torque Tube Rear Bearing	
680	**20751**	Bracket Assembly - Torque Tube Rear Bearing	
681	**20831**	Bracket - Torque Tube Stop	
682	**20841**	Stop Assembly - Torque Tube	
683	**20851**	Stop Installation - Torque Tube	
684	**20911**	Cup Assembly - Longeron Seal	
685	**20921**	Stop - Fuselage Door	
686	**20941**	Bracket - Torque Tube Front Bearing	
687	**20951**	Plate - Fuselage Aileron Pulley Housing	
688	**20961**	Plate - Fuselage Aileron Pulley Housing Flanged	
689	**20972**	Housing Installation - Fuselage Aileron Pulley	
690	**20981**	Bracket Assembly - Torque Tube Front Bearing	
691	**20992**	Bearing Installation - Torque Tube Lower	
692	**21011**	Clip - Stabilizer Adjustment Control Guide	
693	**21121**	Tubes - Fuselage Liner	
694	**21151**	Bracket - Stabilizer Rear Support	
695	**21161**	Support Assembly - Stabilizer Rear	
696	**21171**	Tube - Stabilizer Rear Support	
697	**21181**	Plate - Landing Gear Front Fitting	
699	**21191**	"U" Fitting - Landing Gear Front	
700	**21272**	Fitting Installation - Landing Gear Front	
701	**21281**	Stop - Elevator Front	
702	**21483**	Fittings Installation - Cockpit Floorboard	

703	**21571**	Bracket - Stabilizer Adjustment Crank	
704	**21621**	Stringers - Fuselage Fairing	
705	**21752**	Stop Installation - Fuselage Door	
706	**21811**	Bearing Assembly - Torque Tube	
707	**21852**	Arch Assembly - #3, #4, #5, #6, #7 Turtledeck	
708	**21861**	Arch Assembly - Turtledeck	
709	**22102**	Tubes - Fuselage	
710	**22212**	Channel - 1/2 Superstructure (Sheet 2)	
711	**22222**	Channel - 3/8 Superstructure (Sheet I)	
712	**22401**	Tailpost	
713	**22412**	Tailpost Assembly	
714	**22431**	Strap - Lock Seam Reinforcement	
715	**22471**	Clip - Instrument Panel	
716	**22481**	Fabric - Fuselage Side	
717	**22491**	Fabric - Fuselage Bottom	
718	**22762**	Channel - 3/8 Superstructure (Sheet II)	
719	**23901**	Reinforcement - Fabric	
720	**23921**	Stop - Elevator Rear	
721	**23932**	Stops Installation - Stabilizer Support & Elevator	
722	**24021**	Fabric - Fuselage Top	
723	**24032**	Fabric - Rectangular	
724	**24101**	Fitting - Floorboard Attachment	
725	**24121**	Fitting - Rudder Pedal Attachment	
726	**30351**	Bracket - Landing Gear "V"	
727	**30361**	Bearing Assembly - Landing Gear Vee	
728	**30411**	Reinforcement - Landing Gear Cabane Vee	
729	**30421**	Fitting - Landing Gear Cabane Vee	
730	**30491**	Nut - Axle	
731	**30531**	Clamp - Tail Wheel Spring	
732	**30602**	Vee Assembly - Landing Gear Cabane	
733	**30781**	Flange - Landing Gear Axle Torque	
734	**30941**	Plug - Axle	
735	**31041**	Channel - Landing Gear	
736	**31082**	Fabric - Landing Gear Vee	
737	**31322**	Ring - Shock Cord	
738	**31371**	Tube - Long Shock Strut	
739	**31702**	Cap -Hub	
740	**40071**	Segment - Cable Fairlead	
741	**40081**	Ring - Fairlead Snap	

742	**40092**	Bell Crank Assembly - Aileron	
743	**40111**	Thimble - Float Bungee Cable	
744	**40123**	Cable Assemblies - Control	
745	**40131**	Washer Fin Tie Rod Clevis	
746	**40191**	Arm Assembly - Torque Tube Aileron	
747	**40202**	Tube - Torque	
748	**40212**	Mast - Torque Tube	
749	**40223**	Tube Assembly - Torque	
750	**40231**	Stick - Control	
751	**40261**	Tube Assembly - Torque Tube Connector	
752	**40311**	Plate - Aileron Hinge Reinforcing	
753	**40321**	Rib - Aileron	
754	**40331**	Plate - Aileron Hinge	
755	**40371**	Hinge - Aileron	
756	**40411**	Reinforcement - Aileron Trailing Edge	
757	**40421**	Tube - Aileron Tip	
758	**40451**	Bulkhead - Aileron	
759	**40461**	Plate - Aileron Horn Hinge Lower Reinforcing	
760	**40471**	Cover - Aileron Leading Edge	
761	**40482**	Horn - Aileron	
762	**40501**	Horn Assembly - Aileron	
763	**40521**	Clevises	
764	**40531**	Clevis - Fuselage Tie Rod	
765	**40551**	Horn - Elevator	
766	**40562**	Ribs - Tail Surface	
767	**40572**	Elevator Assembly	
768	**40581**	Braces - Aileron	
769	**40592**	Fin Assembly	
770	**40601**	Sleeve - Rudder Post Reinforcing	
771	**40611**	Horn - Rudder	
772	**40622**	Rudder Assembly	
773	**40631**	Ribs - Stabilizer	
774	**40643**	Stabilizer Assembly	
775	**40701**	Segment - Cable Fairlead	
776	**40721**	Block - Stabilizer Adjustment Control Cable Guide	
777	**40731**	Plate - Stabilizer Adjustment Control Cable Rub	
778	**40761**	Lug - Stabilizer Adjustment Link	
779	**40771**	Link Assembly - Stabilizer Adjustment	
780	**40771**	Link Assembly - Stabilizer Adjustment	

781	**40821**	Fitting - Elevator Horn & Stabilizer Indicator Pulley	
782	**40831**	Lug - Cable Attachment	
783	**40831**	Lug - Cable Attachment	
784	**40842**	Pedal Assembly - Rudder	
785	**40861**	Fitting Assembly - Control Tube	
786	**40941**	Spring - Rudder Pedal Tension	
787	**40991**	Pulley Assembly	
788	**41001**	Pulley - 2-3/4"	
789	**41031**	Wires - Tail Brace	
790	**41051**	Nipple - Tie Rod	
791	**41101**	Plate - Stabilizer Adjustment Crank Escutcheon	
792			skipped number - not missing print
793	**41111**	Crank Assembly - Stabilizer Adjustment	
794	**41121**	Indicator Assembly - Stabilizer	
795	**41151**	Spring - Stabilizer Crank Escutcheon Plate	
796	**41161**	Pin - Stabilizer Adjustment Crank	
797	**41271**	Link - Elevator Horn Lower	
798	**41291**	Housing Assembly - Wing Aileron Cable Pulley	
799	**41351**	Fitting Installation - Aileron Attachment	
800	**41361**	Pulley Installation - Fuselage Aileron Cable	
801	**41371**	Shim - Torque Tube Bearing	
802	**41391**	Brace - Fin Upper	
803	**41401**	Brace - Fin Lower	
804	**41411**	Dowel - Tube	
805	**41421**	Fitting - Aileron Pulley Bracket Attachment (Lower)	
806	**41461**	Stop - Pedal Thrust	
807	**41481**	Cable Assembly - Control	
808	**41491**	Lever - Throttle	
809	**41521**	Black - Front Brake Pedal Bearing (Outboard)	
810	**41531**	Block - Front Brake Pedal Bearing (Inboard)	
811	**41551**	Link - Throttle	
812	**41561**	Stop - Front Brake Pedal	
813	**41581**	Rod Assembly - Brake Pedal Tie	
814	**41591**	Plate - Brake Pedal Heel	
815	**41602**	Pedal Assembly - Front Brake	
816	**41631**	Key - Stabilizer Screw	
817	**41631**	Key - Stabilizer Screw	
818	**41671**	Cable - Stabilizer Adjustment	
819	**41723**	Fabric - Aileron	

820	**41733**	Rudder Assembly - Covered	
821	**41881**	Hinge Assembly - Aileron	
822	**41891**	Hinge Assembly - Aileron Center	
823	**42142**	Fabric Assembly - Rudder	
824	**42491**	Plate - Aileron Reinforcement	
825	**42521**	Splice - Cable Sleeve	
826	**42585**	Aileron Assembly	
827	**42592**	Aileron Assembly - Covered	
828	**42664**	Mechanism Installation - Stabilizer Adjustment	
829	**42672**	Yoke - Stabilizer (Casting)	
830	**42682**	Yoke - Stabilizer (Finished)	
831	**42692**	Yoke Assembly - Stabilizer	
832	**42701**	Bushing - Stabilizer Yoke	
833	**42722**	Turnbuckle Assembly	
834	**42792**	Stub Assembly - Control Stick	
835	**42812**	Stick Assembly - Control	
836	**42851**	Angle - Aileron Tip Rib Short	
837	**42861**	Angle - Aileron Tip Rib Long	
838	**42872**	Rib Assembly - Aileron Tip	
839	**42891**	Spring - Stabilizer Indicator Return	
840	**42911**	Fairlead - Cable	
841	**42922**	Edge Assembly - Aileron Inboard Trailing	
842	**42933**	Edge Assembly - Aileron Outboard Trailing	
843	**42961**	Screw - Stabilizer Adjustment	
844	**42972**	Spar - Aileron	
845	**43001**	Pulley - Parking Brake Idler	
846	**50042**	Cover - Aileron Pulley Housing	
847	**50091**	Stop - Door Plunger	
848	**50101**	Guide - Door Plunger	
849	**50111**	Spring - Door Plunger	
850	**50121**	Rod Assembly - Door Plunger	
851	**50131**	Plunger Assembly - Door	
852	**50151**	Handle - Door	
853	**50161**	Bracket - Fuselage Door Handle	
854	**50173**	Frame Assembly - Door	
855	**50183**	Door Assembly	
856	**50192**	Latch Assembly - Door	
857	**52841**	Weatherstrip Assembly - Enclosure Door	
858	**60481**	Reinforcement - Fabric	

859	**60571**	Plate - Stabilizer Yoke Cover	
860	**60602**	Fairing - Fin Leading Edge	
861	**60671**	Grommet	
862	**60742**	Panel - Tail Inspection	
863	**60752**	Cover - Wing Pulley	
864	**60863**	Reinforcements - Fabric	
865	**70251**	Arm Assembly - Cabin Heater & Carb Air Scoop Control	
866	**70322**	Line Assemblies - Flexible Fuel	
867	**70371**	Fitting Assembly - Fuel Shut-Off Swivel	
868	**70591**	Clamp Assembly - Exhaust Stack	
869	**70991**	Spacer - Muffler Shroud	
870	**71061**	Hose Assembly - Resistoflex Flexible	
871	**71261**	Clip Assembly - Shroud Slide	
872	**71451**	Rod - Engine Baffle Tie	
873	**71991**	Bracket Assembly - Fuel Strainer	
874	**72091**	Strainer Assembly - Header Tank Finger	
875	**72101**	Hose Assembly - Vent Line Flexible	
876	**72381**	Tubes - 2-1/8 O.D. Flexible	
877	**73451**	Plates - Carburetor Air Scoop Attachment	
878	**73811**	Flange - Exhaust	
879	**74081**	Jet - Primer (Straight)	
880	**74181**	Flange - Fuel Tank Filler Cap (Purchased)	
881	**74291**	Coupling Assembly - Fuel Line Swivel	
882	**74301**	Coupling Assembly - Fuel Line Solid	
883	**74311**	Hose - Breather Line Connector	
884	**74912**	Baffle - Engine Intercylinder (Inner)	
885	**80002**	Clamps - Round	
886	**80012**	Bushings (Sheet 1)	
887	**80012**	Bushings (Sheet I)	dupe left in to maintain proper sequence
888	**80022**	Bushings (Sheet II)	
889			skipped number - not missing print
890	**80032**	Clamps - Offset	
891	**80042**	Plates - Rectangular	
892	**80111**	Stud	
893	**80122**	Washers (Sheet I)	
894	**80132**	Tubes Sheet No 1	
895	**80222**	Clamps - Open	
896	**80292**	Plates - Reinforcement	
897	**80331**	Plate - Bungee Pulley Housing	

898	**80342**	Straps - Reinforcement	
899	**80421**	Pulley - 1-3/4"	
900	**80541**	Frame - Inspection Window	
901	**81102**	Washers - Square	
902	**81172**	Lugs (Sheet I)	
903	**81232**	Discs	
904	**81262**	Links (Sheet I)	
905	**81272**	Gussets	
906	**81302**	Lugs (Sheet II)	
907	**81332**	Clamps - U	
908	**81342**	Washers Sheet II	
909	**81352**	Links (Sheet II)	
910	**81362**	Plates	
911	**81381**	Housing Assembly - Bungee Pulley	
912	**81411**	Spring - Bungee	
913	**81651**	Plate - Fuselage Serial Number	
914	**81761**	Pins & Rods (Sheet I)	
915	**81903**	Step Assembly	
916	**81911**	Plate - Step Attaching	
917	**82161**	Washer - Countersunk	
918	**82332**	Tube Assemblies - 1/4 Dia	
919	**82341**	Bushing Assemblies	
920	**82352**	Tubes (Sheet No. 2)	
921	**82371**	Hose - Flexible	
922	**82461**	Window - Wing Inspection	
923	**82551**	Flares - Tube End	
924	**82732**	Bushings (Sheet 3)	
925	**83161**	Hose	
926	**83302**	Coil Springs	
927	**83481**	Stud - Catch	
928	**83491**	Spring Catch	
929	**83891**	Webbing	
930	**83913**	Fastener Details - Durable Dot	
931	**83991**	Wire Assembly - Static Ground	
932	**84132**	Switch Assembly - Ignition	
933	**84471**	Section - Channel	
934	**84491**	Section - Channel	
935	**84501**	Section - Channel	
936	**84511**	Section - Channel	

937	84521	Section - Channel	
938			skipped number - not missing print
939	84682	Blocks - Wood	
940	84761	Section - Rib Brace	
941	84771	Section - Rib Capstrip	
942	84921	Section - Angle	
943	84931	Section - Filler Block	
944	84971	Section - Streamlined Tube	
945	85012	Washers Sheet III	
946	85021	Section - Wooden Strip	
947	85031	Angle - Ignition Switch Cover Attachment	
948	85061	Capscrew - 1/4 (Special)	DRAWING 85061 MISSING
949	85161	Section - Square Tube	
950	85211	Clamp - Float Stabilizer Yoke Bungee	
951	85341	Wire - Engine Ground	
952	85351	Section - Channel	
953	85411	Placard - Serial Number	
954	85551	Section - Square Tube	
955	85641	Fabric - Inspection Window Frame Attachment	
956	85881	Grommet - Plain	
957	86032	Strips - Felt (Sheet 2)	
958	86062	Tubes (Sheet 4)	
959	86092	Pins & Rods (Sheet 2)	
960	86102	Bushings (Sheet 4)	
961	86102	Bushings (Sheet 4)	DUPLICATE - SEE PAGE 960
962	90150	Strip - Fibre	
963	90458	Capstrip - Wing Rib	
964	90459	Capstrip - Wing Rib	
965	90479	Rib Outline - Wing	
966	90797	Sleeve Insulating	
967	90797	Sleeve Insulating	
968	91193	Fitting - Swivel	

SPECIFICATION FOR AIRPLANE

U. S. AIR FORCE MODEL L-21A

PIPER MODEL PA-18 (MODIFIED)

SHORT RANGE OBSERVATION

LIAISON AIRPLANE

CONTRACT NO. AF33(038)-24719

DATE: 24 APRIL 1951.

Prepared by: James C. Bowes
Chief Draftsman

PREPARED.....
CHECKED.....
APPROVED.....

414 710

A 3

TABLE OF CONTENTS

PARAGRAPH NO.	TITLE	PAGE NO.
A	APPLICABLE SPECIFICATIONS	3
B	TYPE	3
C	MATERIAL AND WORKMANSHIP	5
D	GENERAL REQUIREMENTS	5
E	DETAIL REQUIREMENTS	5
F	METHOD OF INSPECTION AND TESTS	13
G	PACKING	14
H	NOTES	14
	APPENDIX A	15
	APPENDIX B	16
	APPENDIX C	18
	APPENDIX I	19
	APPENDIX II	19

PREPARED.....
CHECKED.....
APPROVED.....

414 710

A 3

REV. 9 MAY 1951

AIRPLANE MODEL L-21A

A. APPLICABLE SPECIFICATIONS.

A-1. The following publications of the issue specified herein are applicable to, and form a part of, this specification.

Civil Air Regulations Part 3 - Airplane Airworthiness as amended to 1 November 1949.
Civil Aeronautics Manual Part 3 - As revised 17 May 1950.
Contract No. AF33(038)-24719
Engine Manufacturers Model Spec. No. 2069A dated 27 January 1950.
Finish Specification No. 10, Piper Report No. 381, revised 4 May 1951.
Appendix IA - List of Applicable Drawings as Submitted.
Appendix IIA - Deviations From Standard Parts, Processes and Materials.
Appendix IIB - Deviations From Handbook Requirements and Related Documents.

B. TYPE

B-1. This specification covers the following airplane:

Designer's Name and Model No. ..... Piper PA-18 (Modified)
U. S. Air Force Designation L-21A
Number of Places ..... 2.
Number of Engines ..... 1.

B-2. This airplane will be equipped with the following engine:

Name and Type ..... Lycoming O-290-D
Horsepower Rating:
Normal .... 125 Altitude ... Sea Level. RPM .... 2600.
Propeller Gear Ratio ..... Direct.

B-3. This airplane will be equipped with a two blade propeller as specified in Paragraph E-3.

PREPARED.....
CHECKED.....
APPROVED.....

414 710

A 3

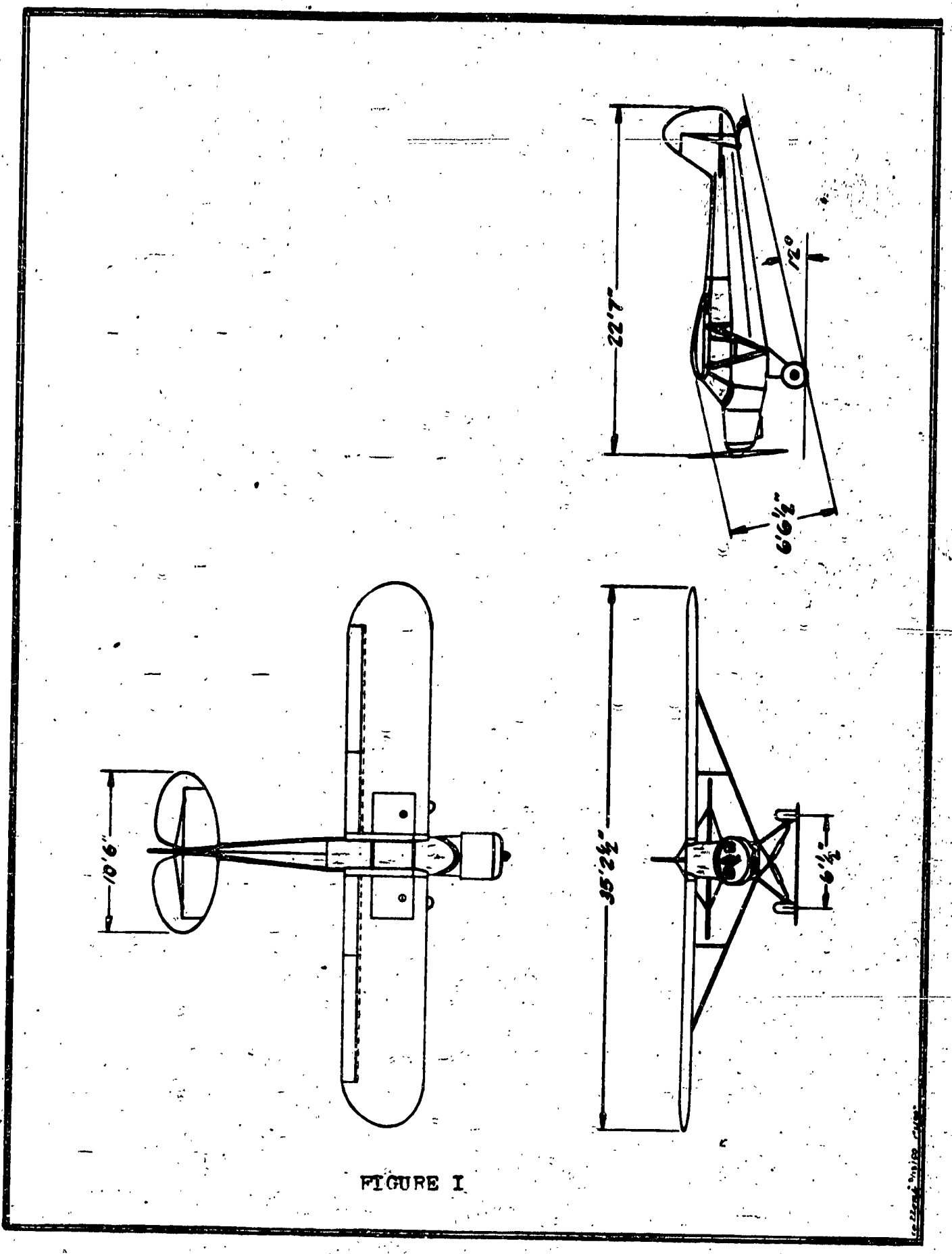

FIGURE I

A 3

Rev. 7/10/51

B-4. The tactical mission of this airplane is short range observation and the training of pilots.

C. MATERIAL AND WORKMANSHIP.

C-1. Not applicable. See Appendix IIA.

D. GENERAL REQUIREMENTS.

D-1. The L-21A airplane covered by this specification, shall be designed and constructed in accordance with specifications listed in Section A, and as hereinafter set forth.

E. DETAIL REQUIREMENTS.

E-1. Crew, Equipment and Furnishings. -
The airplane is designed to carry a crew of two, one pilot and one observer. Equipment shall be installed as specified in Appendix A, B, and C.

E-2. Airplane.

E-2a(1). Design Gross Weight. 1500 pounds (Normal Category)
1500 pounds (Utility Category)

E-2a(2). Balance.

Forward Limit Reduced Wgt. 1200 lbs. 11.5" Aft W.L.E.
18.1% MAC

Forward Limit Gross Wgt. 1500 lbs. 14.0" Aft W.L.E.
22.1% MAC

Rearward Limit Gross Wgt. 1500 lbs. 19.0" Aft W.L.E.
30.3% MAC

E-2b. Structures:

E-2b(1). Criteria for Design:

E-2b(1)(a). Limit Flight Load Factors.

E-2b(1)(a)(1). Limit Maneuver Load Factors:
Positive 4.4 Negative -1.76

E-2b(1)(a)(2). Limit Gust Load Factors:

E-2b(1)(a)(2)(a). Design Gross Weight:
Positive 3.59 Negative -1.59

E-2b(1)(a)(2)(b). Minimum Flying Weight:
Positive 4.32 Negative -2.32

PREPARED
CHECKED
APPROVED

A 3

E-2b(1)(b). Limit Landing Factors:

E-2b(1)(b)(1). Landplane or Ground Landings: 2.897

E-2b(1)(c). Limit Diving Speed: 165 MPH
107.8% High Speed

E-2c. Detail Design:

E-2c(1). Wing Group: Monoplane, High Wing.

E-2c(1)(a). Airfoil Section Designation:
Root ... USA35B (Mod.) Tip ... USA35B (Mod.)

E-2c(1)(b). Dimensions:

Wing Area	178.5 sq. ft. Includes Center Section
Span	35 ft. 2 1/2 in.
Root Chord	5 ft. 3 in.
Tip Chord	5 ft. 3 in.
Taper Ratio	One
Incidence	Root 2° 2'
Incidence	Tip -1°
Dihedral	Front Spar 0° 36' 36"
Sweepback	(L.E.) None
Max. Rib Spacing	16 5/8"
Spar Locations	Front: 9 in. aft W.L.E.
	Rear: 40 in. aft W.L.E.
Aspect Ratio	6.944

Mean Aerodynamic Chord, Length: 5 ft. 1 1/2 in.
location relative to L.E. with respect to root chord (root chord is 16.25 inches from plane of symmetry).
Horizontal: .4 in. aft and 94.37 in. outboard.

E-2c(1)(c). Wing Construction. The wing consists of an externally braced high wing monoplane structure incorporating two extruded aluminum spars. Drag bracing consists of steel and aluminum tubular compression struts and adjustable round steel tie rods. The wing ribs are fabricated of drawn sections of aluminum alloy riveted into a truss-type structure, and are attached to the spars by means of self tapping sheet metal screws. The leading edge is covered with light gauge aluminum alloy sheet which extends back to the front spar on the upper and lower surfaces from the inboard rib to the strut attachment point and approximately halfway to the front spar on the upper and lower surfaces from the strut point outboard to the tip rib. Nose former ribs spaced approximately midway between the main wing ribs are attached to the front spar by means of self tapping sheet metal screws. The wing tip bow consists of a formed ash strip.

PREPARED
CHECKED
APPROVED

A 3

The aileron cutout spar is an aluminum alloy channel attached to the wing ribs by means of self tapping sheet metal screws. Aileron hinge brackets are constructed of steel channels and are bolted to the rear wing spar. Spar fittings for attachments at the wing root and at strut point are fabricated of aluminum extrusions and strip steel respectively. The lift truss consists of front and rear members of streamline steel tubing into the ends of which are welded attachment fittings. A jury strut system is employed to reduce the column length of the wing brace struts. The wing panel is fabric covered, attachment of the fabric to the ribs being accomplished by conventional rib stitching. Slotted flaps inboard of the aileron are incorporated.

E-2c(2). Control Surfaces:

E-2c(2)(a). Ailerons:

Areas: 9.4 sq. ft. each.
Angular Movements: Up 18° ± 2°. Down 18° ± 2°.
Differential Motion: None.
Distance from Plane of Symmetry to Centroid of Aileron Area: 10 ft. 10 1/2 inches.
Type of Balance: Hinge Axis is located aft of leading edge at 21.3% of aileron chord.
Tabs: None.

E-2c(2)(b). Horizontal Tail Surfaces:

Area: 30 sq. ft. total.
Span: 10' 6" (Overall)
Max. Chord: 3 ft. 9 5/8"

Stabilizers:

Area: 15.9 sq. ft. total
Normal Setting: -2 1/2° (Relative to Longitudinal Axis)
Angular Movement: Up 2 1/2° ± 1/2°. Down 4° ± 1/2°.

Elevators:

Area: 14.1 sq. ft. total.
Angular Movement: Up 25° ± 2°. Down 15° ± 2°.
Type of Balance: Aerodynamic balance, overhang ahead of hinge line outboard of stabilizers.
Tabs: None

E-2c(2)(c). Vertical Tail Surfaces:

Fin:

Area: 4.66 sq. ft.
Normal Setting: 0 degrees.
Angular Movement: Right 0°. Left 0°.

PREPARED
CHECKED
APPROVED

A 3

Rudder:

Area: 6.76 sq. ft.
Angular Movement: Right: 20° + 2°. Left: 20° + 2°.
Type of Balance: Overhang ahead of hinge line above fin.
Tabs: None.

E-2c(2)(d). Construction of Control Surfaces: The aileron structure is fabricated of riveted aluminum alloy framework with fabric covering. A channel runs the length of the aileron and serves as the main spar to which is attached the nose former ribs, nose cover sheet, ribs, hinges, and horn fittings. Covering consists of fabric stitched to the ribs. The vertical fin has a steel tubular leading edge and rear spar connected by ribs of steel channel. The rudder has a steel tube leading edge and trailing edge and steel channel ribs. The stabilizer consists of steel tubular leading and trailing edges joined by steel channel ribs welded at the ends. The elevators comprise a steel tubular leading and trailing edge joined by steel channel ribs welded at the ends. All members of the tail surface system are covered with fabric stitched to the steel channel ribs. Hinges are welded directly to the spars.

E-2c(3). Control System:

Elevator. The fore and aft motion of the control sticks is transmitted back through the fuselage by means of the following linkage: The sticks are mounted on a torque tube which passes beneath the front seat above the floorboards. The lower ends of the sticks are connected by a push pull tube, which passes through the torque tube. To the forward end of the push pull tube is connected a flexible steel cable which goes foreward over a pulley and back through the fuselage and is connected at the rear to the lower elevator horn by means of turnbuckles and clevis bolts. To the aft end of the push pull tube is connected a flexible steel cable which goes back through the fuselage and is connected at the rear to the upper elevator horn by means of turnbuckles and clevis bolts.

Aileron. The lateral motion of the sticks rotates the torque tube, to the rear of which is attached the aileron control cable arm. Control cables are attached to this control arm and pass around a series of pulleys before attaching to the upper aileron horns by means of turnbuckles and clevis bolts. A balance cable connecting the lower aileron horn in each wing passes along the rear of the front spar.

PREPARED
CHECKED
APPROVED

414 716

A-3

Rudder: Rudder controls are provided for the front and rear seats. The pedals are hinged below the floor and the cables, connecting directly to the rudder horn, are attached at the outer ends of the rudder pedals.

Stabilizer: The stabilizer is operated by a crank located on the left side of the cockpit. An endless, flexible steel cable passes around a V-groove pulley attached to the crank, then back through the fuselage to another V-groove pulley on the lower end of the stabilizer adjusting screw. Turning the crank forward or backward rotates the screw, which in turn raises or lowers a stabilizer yoke to which is attached the stabilizer front spar.

E-2c(4). Lift and Drag Increasing Devices:
Type. As mentioned in paragraph E-2c(1)(c) slotted flaps are located inboard of the ailerons. The flaps are constructed in the same manner as the aileron. (See paragraph E-2c(2)(d). The downward movement of the flap is controlled by means of a flexible steel cable which runs from a bellcrank in the wing to a lever located on the left side of the cockpit adjacent to the pilot's seat. By moving this lever to the rear the flap is lowered and is held in this position by means of a ratchet which is located at the base of the lever and actuated by means of a push button on the top of the flap lever. When the control lever is moved forward the flaps are automatically raised by means of a spring which is attached between the bellcrank arm and the rear spar.

E-2c(4)a. Dimensions and Movements:

Span	5' -2 1/2"
Area	5.75 sq. ft. each
Chord	13 1/4 inches
Travel (Down)	50°

E-2c(5). Body Group:

E-2c(5)(a). Fuselage or Hull:

Maximum Cross Section:
Height: 54 inches.
Width: 27 3/4 inches.

Type of Construction. The primary fuselage structure consists of a welded steel tubular frame work which employs four longerons and a Warren truss-type shear bracing. Wing attachment fittings, tail surface attachment fittings, landing gear attachment fittings, and engine mount fittings are welded to the primary fuselage structure. The fuselage is covered with fabric.

PREPARED.....
CHECKED.....
APPROVED.....

414 710

A 3

REV. 9 MAY 1951

Cockpit Enclosure. The cockpit enclosure consists of a steel channel framework which is welded to the fuselage structure. The framework is then covered with plexiglas. The enclosure extends from the windshield to a point approximately twenty inches aft of the wing trailing edge.

E-2c(6). Nacelles, Engine Mounts, and Cowling: The engine mount consists of a welded steel tubular frame which is attached to the front end of the fuselage by means of four bolts. The engine is attached to the mount by means of four bolts and rubber mounting bushings are provided to minimize vibration. Aluminum alloy cowling is used. The engine cylinders are provided with baffles to direct the air flow over the cylinders. The engine mount is hinged at the firewall to provide ready access to the engine accessories.

E-2c(7). Alighting Gear: The main landing gear consists of individually sprung wheels on which are mounted low pressure 8.00x 4 tires. The landing gear vee is hinged at the fuselage, and the axle is welded directly to the lower end of the vee. The shock absorbing strut consists of steel tubes incorporating an oil hydraulic unit and rubber shock cord rings. The tail wheel is mounted on steel spring leaves which are bolted to the tail post of the fuselage structure. The tail wheel tire size is 6 x 3.00 four ply. Steering of the tail wheel is accomplished through rubber shock cord or spring links extending to a horn mounted in the lower end of the rudder post.

E-2c(7)(a). Main Landing Gear

Type of Gear: Split Axle. Non-Retractable.
Major Dimensions: Tread 6 ft. 1/2 in.
Height: 2 ft. 5 in.
Max. Vertical Deflection including Deflection of tire: 14.5 in.
Control System: None

E-2d. Materials-Finishing and Processes. The external surfaces and parts of this airplane shall be finished in accordance with Piper Aircraft Corporation Finish Specification No. 10, Report No. 381. The exterior surface shall be finished in yellow cellulose acetate butyrate dope and shall be marked in accordance with Piper Aircraft Corporation Drawing No. 13375 (Marking Details - Airplane).

E-2e. Performance. This airplane at design gross weight will be capable of the following performance at N.A.C.A. standard air conditions:

Top Speed	125 MPH	108.5 Knots
Cruising Speed (75% Power)	110 MPH	95.5 Knots
Cruising Speed (60% Power)	94 MPH	81.6 Knots
Stalling Speed	38 MPH	32.9 Knots
Take-Off Run (Ft.)	210	
Take-Off Over 50' Barrier (Ft.)	510	

PREPARED
CHECKED
APPROVED

414 710

A-3

E-2e. Performance. (Cont'd.)

Landing Roll (Ft.)	300		
Landing Over 50' Barrier (Ft.)	600		
Best Rate of Climb Speed	71	MPH	61.6 Knots
Rate of Climb S.L. (Ft./Min.)	1060		
5000' (Ft./Min.)	830		
10000' (Ft./Min.)	580		
15000' (Ft./Min.)	320		
Best Angle of Climb Speed	57	MPH	49.5 Knots
Best Angle of Climb Ratio	1:5		
Service Ceiling (Ft.)	19,500		
Absolute Ceiling (Ft.)	21,700		
Fuel Consumption (Gal./Hr. 75% Power)	7.7		
Fuel Consumption (Gal./Hr. 60% Power)	5.0		
Cruising Range (75% Power)	500	Mi.	434 Naut.Mi.
Cruising Range (60% Power)	700	Mi.	607.8 Naut. Mi.

E-2e(1) Airspeed Limits:

Maneuvering	94	MPH	81.6 Knots
Max. Structural Cruising	110	MPH	95.5 Knots
Never Exceed	138	MPH	119.8 Knots
Flaps Extended	80	MPH	69.4 Knots

E-3. Propeller Installation: A propeller conforming to the following and having the following characteristics shall be installed:
Hub Manufacturer's Name: Sensenich Corp.
Blade Manufacturer's Name: Sensenich Corp.
Type: Fixed Pitch, Metal
Diameter: 74 Inches. Number of Blades: Two

E-3a. Equipment and Furnishings. The equipment specified in Appendix "A" of this specification shall be installed in accordance with the conditions set forth in Section H.

E-4. Power Plant Installation. The Power Plant installation shall conform to the specifications set forth in CAR Part 3. One engine of the tractor type is mounted in the nose of the fuselage. Engine controls furnished include throttle control, carburetor heater control, fuel shut-off valve, primer, and mixture control with idle cut-off.

E-4a. This airplane shall be equipped with one Lycoming Model O-290-D engine, conforming to Lycoming Specification No. 2069-A.

E-4b. Lubrication System: An integral oil sump is incorporated.

PREPARED
CHECKED
APPROVED

414 710

A 3

PIPER AIRCRAFT CORPORATION

LOCK HAVEN, PENNA.

E-4c. Cooling System: A fixed type of engine baffle is installed for cylinder and cylinder head cooling. Cooling of the oil is accomplished by the use of an oil radiator.

E-4d. Fuel System: A 37 gallon gravity flow fuel system incorporating two 18 gallon wing tanks and two 1/2 gallon header tanks is provided. A fuel shut-off valve adjacent to the front seat is operable from either seat. A fuel strainer of 2 ounce capacity equipped with a quick drain is mounted on the engine side of the firewall. Wing tanks incorporate visual type fuel gauges.

E-4e. Engine Control System: Flexible controls are used for the throttle, carburetor air heater and mixture controls.

E-4f. Exhaust System: Stainless steel tubular manifolding collects the exhaust discharge from each cylinder and conducts the discharge aft to a silencer which is mounted horizontally behind the engine. Cross over manifolding is utilized to obtain maximum power by efficient scavaging of exhaust gases. A single outlet pipe from the silencer discharges outside the cowling. The silencer is enclosed by a shroud through which cool air is circulated.

E-4g. Engine Air Intake System: Cold air is induced into the carburetor through an air filter which faces directly into the airstream, and a shut-off valve is incorporated in the cold air entrance aft of the filter maze, so that the amount of heated air induced into the air intake system may be regulated in flight. Heated air is collected from the muff surrounding the exhaust silencer, and is conducted to the carburetor by means of flexible tubular conduit.

E-4h. Equipment and Furnishings: The equipment specified in Appendix "A" of this specification shall be installed under the conditions set forth in Section H.

E-6. Equipment Installation.

E-6a. Instruments and Navigation Equipment:

E-6a(1). Instruments:

E-6a(1)(a). An aluminum alloy instrument board is mounted at the front of the cockpit.

E-6a(1)(b). Instrument Arrangement on Board: The airspeed indicator, compass, tachometer, altimeter, turn and bank indicator, and combination oil pressure and temperature gauge are mounted in the instrument panel.

PREPARED
CHECKED
APPROVED

414 710

A 3

E-6b. Electrical Installation: The electrical system is of 12 volt capacity and incorporates a starter, generator, voltage regulator, position lights, landing lights, cockpit light, and provisions for the installation of SCR 619 radio. The master switch circuit is protected with fuses. The generator, lights, and starter solenoid circuits are protected with "Push to Reset" circuit breakers.

E-6c. Miscellaneous Equipment Installation:

E-6c(1). Parachute: Back-type parachutes may be worn in the front and rear seats. Parachutes will not be furnished by the contractor.

E-6c(2). Safety Belts: A safety belt and shoulder harness is installed in each of the seats.

E-6c(3). Aircraft Cushions: Artificial leather cushions are provided for the front and rear seats.

E-6c(4). Fire Extinguisher: A one quart hand fire extinguisher approved by the Underwriters Laboratories is mounted in the cockpit.

E-6c(5). Heating and Ventilating System: An air heater muff surrounding the exhaust silencer is used to furnish warm air to the cabin. The volume of warm air induced is controllable from the cockpit. Ventilation is accomplished by adjustment of a sliding window in the left side of the airplane.

E-6d. Equipment and Furnishings. The equipment specified in Appendix "B" of this specification shall be installed in accordance with the conditions set forth in Section H.

E-7. Equipment and Furnishings: The equipment specified in Appendix "C" of this specification shall be installed in accordance with the conditions set forth in Section H.

F. METHOD OF INSPECTION AND TESTS.

F-1. The method of inspection and tests shall be in accordance with requirements set up by the Civil Aeronautics Administration for certification of non-airline carrier commercial aircraft constructed under a Production Certificate. Wherever requirements of the United States Air Force conflict with Civil Aeronautics requirements, the Civil Aeronautics Administration requirements shall apply. Each airplane will be inspected by a representative of the Civil Aeronautics Administration if desired.

PREPARED.....
CHECKED.....
APPROVED.....

A 3

G. PACKING. - Not Applicable.

H. NOTES:

H-1. The contractor shall install the engine and power plant installation specified in Section E-4 above, together with the propeller specified in Section E-3 above, and all other equipment in accordance with Civil Aeronautics Administration requirements. Wherever requirements of the United States Air Forces conflict with Civil Aeronautics Administration requirements, Civil Aeronautics Administration requirements shall apply.

H-2. Equipment specified in Appendices A and B marked with one (1) asterisk (*) is to be furnished by the government and installed by the contractor.

PREPARED.....
CHECKED.....
APPROVED.....

414 710

A 3

Rev:14 May 51

APPENDIX A

PROPELLER

Quantity	Item	Specification
1	Propeller-Sensenich Corp.	M76AM-2

POWER PLANT

*1	Engine	2069-A
	Lycoming Model O-290-D, with Shielded Ignition and Electrical System	
	Exhaust System, including Silencer	12447
	Carburetor Air Heater	12447
	Carburetor Air Filter	11950-5

PREPARED.....
CHECKED.....
APPROVED.....

414 710

A 3

REV. 9 MAY 1951

APPENDIX B

EQUIPMENT

Quantity	Item	Specification
	Instruments	
1	Altimeter Assembly	Type C-13
1	Compass Assembly (Pilots)	Type B-16
1	Indicator Assembly Airspeed	Type B-8
1	Tachometer Assembly	Type C-11
1	Indicator, Oil Temperature and Pressure	Piper Dwg. 12406-3
1	Indicator, Turn and Bank	1719
	Miscellaneous Equipment	
*2	Safety Belts	Type B18
1	Tailwheel-Scott Aviation Corp.	Model 3200
1	Lock Control (Mfg. Piper Aircraft)	12855
1	Front Seat Cushion	12293 and 12294
1	Rear Seat Cushion	10763 and 12289
1	Fire Extinguisher, Hand	A20
1	Heater Installation, Cabin (Mfg'd. by Piper Aircraft Corp.)	12353
2	Main Wheel Assemblies, 8.00 x 4 Model 841A Goodrich	D-3-13-A-1
2	Brake Assemblies - Goodrich	D-2-113
2	Tube Assemblies, 8.00 x 4	
2	Casing Assemblies 8.00 x 4 4 Ply	

PREPARED.....
CHECKED.....
APPROVED.....

A 3

REV. 9 MAY 1951

APPENDIX B CONT'D.

EQUIPMENT

Quantity	Item	Specification
	Miscellaneous Equipment Cont'd.	
1 (Set)	Tie Down Rings (Piper)	12345
1	Kit-Park Brake-Scott Avia. Corp. 2715A	
1	Holder-Map Case and Flight Report (Mfg. Piper Aircraft Corp.)	12958
1	Pitot Protector-Automatic, Model 1 Strong's Flying Service Pearsall, Texas	
2	Strap Assy.-Shoulder Harness	13129-2
2	Strap Assy.-Shoulder Harness	13129-3
*1	First Aid Kit	42D7411

PREPARED.....
CHECKED.....
APPROVED.....

414 710

A 3

APPENDIX C

RADIO

Quantity	Item	Specification
1	Provision for Mounting SCR619 Radio	

PREPARED.....
CHECKED.....
APPROVED..... .....

414 710

A 3

APPENDIX I

I-A. LIST OF APPLICABLE DRAWINGS AS SUBMITTED: Drawings will consist of those submitted to and approved by the Civil Aeronautics Administration for Type Certification of this aircraft.

APPENDIX II

II-A. DEVIATIONS FROM STANDARD PARTS, PROCESSES AND MATERIALS: This aircraft will be constructed under the requirements established by the Civil Aeronautics Administration for type certification.

II-B. DEVIATIONS FROM HANDBOOK REQUIREMENTS AND RELATED DOCUMENTS: This aircraft will be constructed under the requirements established by the Civil Aeronautics Administration for type certification.

PREPARED.....
CHECKED.....
APPROVED.....

A 3

PIPER AIRCRAFT CORPORATION

LOCK HAVEN, PENNA.

REPORT NO. 381

PROTECTIVE FINISH SPECIFICATION

PIPER SPECIFICATION NO. 10

DATE: OCTOBER 30, 1942

REVISED: MAY 4, 1951

REVISED: JUNE 21, 1951.

Prepared By: J. C. Bowes
Engineering Dept.

Checked By: J. W. McNary
Project Engineer

PREPARED
CHECKED
APPROVED

414 710

A 2

PIPER AIRCRAFT CORPORATION

LOCK HAVEN, PENNA.

PIPER AIRCRAFT CORPORATION

LOCK HAVEN, PENNA.

PIPER SPECIFICATION NO. 10

PROTECTIVE FINISH SPECIFICATIONS

The following specifications apply to the protective coatings and corrosion inhibitors applied to airplane parts, manufactured or used by the Piper Aircraft Corporation, and are limited to those applied at our factory.

CLEANING

Ferrous and Non-Ferrous Metals

1. Traces of oil and grease, scale, brazing flux and adherent dirt must be removed by appropriate means before finishes are applied.

GENERAL REQUIREMENTS

1. Special dope finishes shall be applied in strict accordance with the Finish Manufacturer's recommendation.
2. All materials and workmanship shall be consistent with accepted standards of the industry.
3. All parts must be clean and dry before any protective finish is applied.
4. Preceding coat must be dry before applying additional coats, except "cross coats" (indicated thus: 6 + 6)
5. Zinc chromate primer must be allowed to dry for one hour before applying other finishes.

PREPARED
CHECKED
APPROVED

414 710

A 2

PIPER AIRCRAFT CORPORATION
LOCK HAVEN PENNA.

Revised:

5-25-50

PROTECTIVE FINISHES AND CORROSION INHIBITORS

Code Number	Description
1	Zinc Chromate Primer
2	----------
3	----------
4	Clear Wood Lacquer
5	Acid-Proof Paint
6	Clear Nitrate Dope
7	Aluminized Nitrate Dope
8	Pigmented Nitrate Dope
9	Metalizing (Alum. or Zinc)
10	Lionoil
11	Clear Butyrate Dope
12	Aluminized Butyrate Dope
13	Pigmented Butyrate Dope
00	Vaseline or Cosmoline
A	Paladin Black Primer (Roxalin #12412)
D	Roxaprene IC - 202491
E	Dope Proof Lacquer or Dope Resistant Sealer
V	Vitralyn Enamel
M	Emycel Primer (Roxalin #3420)

RELATED OPERATIONS

Code Letter	Description
W	Spray with water
S	Sanding
T	Taping and Patching
B	Sandblasting
C	Cleaning

MINIMUM FINISH SCHEDULES (Each letter or figure represents a coat or operation, cross coat thus: +)

Application	Code	Remarks
Steel, tubular structures welded assemblies, and small parts.	C-1-8 or C-A-8 B-C-1-8 or B-C-A-8	Bearing surfaces and corrosion resistant steels excepted.
Doped fabric attachment and contact areas of steel structures	C-1-8-E or C-A-8-E B-C-1-8-E or B-C-A-8-E	
Steel, tubular structures welded assemblies, and small parts for seaplanes (See Note 1 on top of Page 4).	C-9-1-8 or C-9-A-8 B-C-9-1-8 or B-C-9-A-8	

PREPARED.....
CHECKED.....
APPROVED.....

414 710

A 2

Rev: 6/21/51

MINIMUM FINISH SCHEDULES (CONT'D.)

APPLICATION	CODE	REMARKS
Internal surface of steel tubular structures for seaplanes	10	Hot oil introduced through small holes; parts rotated and drained
Doped fabric attach. and contact areas of steel structures for seaplanes	C-9-1-8- or C-9-A-8-E B-C-9-1-8-E or B-C-9-A-8-E	
Exposed steel parts as tail springs	00	Apply heavy film.
Battery boxes (inside) and adjacent structure	1-5-5 or A-5-5	
Plywood and small wood parts	4	Heavy coat at ends and edges.
Wood Wing Spars	4-4-4	Additional coat necessary on edges of laminated spars.

Fabric Finishes - General

1. Raw Fabric
   Nitrate Finish W-1-6-S-6+6-T-S-6+6-S-7+7-S-8+8-8 — Leading edge of wings and tapes brushed with 1 part thinner to 1 part dope, when necessary to prevent formation of air bubbles.
2. Pre-Doped Fabric
   Nitrate Finish
   (See Note 4) W-6+6-T-S-6+6-7+7-S-8+8-8

3. Raw Fabric
   Cellulose Acetate Butyrate Finish
   Randolph W-M-11-S-11+11-T-S-11+11-11+11-S-12+12-S-13+13-13

4. Predoped Fabric
   Cellulose Acetate Butyrate Finish
   Randolph
   (See Note 2) W-11+11-T-S-11+11-11-12+12-S-13+13-13

5. Raw Fabric
   Cellulose Acetate Butyrate Finish
   Titanine "Titen" W-M-11-S-11-T-S-11+11-12-S-13

6. Predoped Fabric
   Cellulose Acetate Butyrate Finish
   Titanine "Titen"
   (See Note 4) W-11-T-S-11+11-12-S-13

PREPARED
CHECKED
APPROVED

414 710

A 2

Rev: 6/21/51

Fabric Finishes - Army

1. Model L-18A
(Nitrate Finish)
(See Note 3) M-M-6-S-6+6-T-S-6+6-S-7+7

Note 1. Prior to 3-14-47 the external finish for steel portion of seaplanes was as indicated here C-AA-DD (When D is sprayed) C-AA-D (When D is dipped)

Note 2. Pre-doped fabric referred to under Fabric Finishes Schedules #2 and #4 shall be per Titanine Specification Ti-Cloth PD-58 treated with fungicidal material Di-Methyl Di-Thio Carbamate.

Note 3. Finishing materials used on Model L-18A airplanes shall conform to AN Specifications as follows:

Code No.	Description	Specification
1	Zinc Chromate Primer	AN-P-656
4	Clear Wood Lacquer	AN-V-26 or AN-TT-V-1[illegible]
6	Clear Nitrate Dope	AN-TT-D-514
7	Aluminized Nitrate Dope	AN-TT-D-551
8	Pigmented Dope	AN-TT-D-554

Note 4. Pre-doped fabric referred to under Fabric Finishes Schedule #6 shall be per Titanine Specification Ti-Cloth PD-58 treated with fungicidal material Di-Methyl Di-Thio Carbamate or Ti-Cab PD-65 treated with fungicidal material Di-Methyl Di-Thio Carbamate.

PREPARED
CHECKED
APPROVED

414 710

A 2

PIPER SPECIFICATION NO. 10

ADDENDUM NO. 1

PROTECTION OF EXPOSED STEEL SURFACES

The exposed (unfinished) surfaces of steel fittings, to be shipped in Army Spare Parts orders, must be protected with one of the following rust preventives.

1. Rust Ban No. 347 (Standard Oil Co. of Pa.)

This is a cold application material, and may be applied like cup grease, on such parts as the inside of hinge bearings, where it is not likely to be wiped off in handling.

2. Rust Ban No. 324 (Standard Oil Co. of Pa.)

This is a hot application material, and may be applied by dipping, at 200°F., brushed on at 170°F., or swabbed on at 140°F. (The machined surface of an axle is typical illustration.)

It will not be practical to treat covered components, nor most finished parts, although such items as snock struts, cabane vees or control stick stubs may have their extremities dipped, to protect the inside bearing surfaces of the attachment fittings.

PREPARED
CHECKED
APPROVED

A 2

PIPER AIRCRAFT CORPORATION

LOCK HAVEN, PENNA.

April 23, 1942

Revised: November 14, 1942 March 29, 1943 April 24, 1943 March 6, 1944

PIPER SPECIFICATION NO. 9 GENERAL DIMENSIONAL LIMITS AND RECOMMENDED SHOP PRACTICES

This specification shall control manufacturing practices, except for conditions herein noted, unless specific information is noted on the drawings.

Fractional	(Larger Than 1/8")	± 1/32
	(1/8" or Smaller)	± 1/64
Decimal		± .010"
Angular		± 1/2°

WELDING

1. Space between edges of adjacent parts to be bridged by weld bead - maximum 1/16" up to and including 1/16" thick materials. Same as material thickness on thicker material.
2. Location of center lines of fuselage members ± 1/8".
3. Eccentricity of tubular members ± 1/8" at intersections.

RIVETING

1. Recommended drills for rivet sizes:

RIVET	DRILL
1/16"	No. 52 (.064")
3/32"	No. 40 (.098")
1/8"	No. 30 (.1285")
3/16"	No. 12 (.189")

2. Length - To allow rivet to extend 1 1/2 x shank diameter through material after draw setting. (Hand or squeeze riveting).
3. Edge Distance - 2 x hole diameter from center of hole to edge of materials.

FORMING METAL

1. If possible, all 90° bends should be made 90° to direction of metal grain.

PREPARED
CHECKED
APPROVED

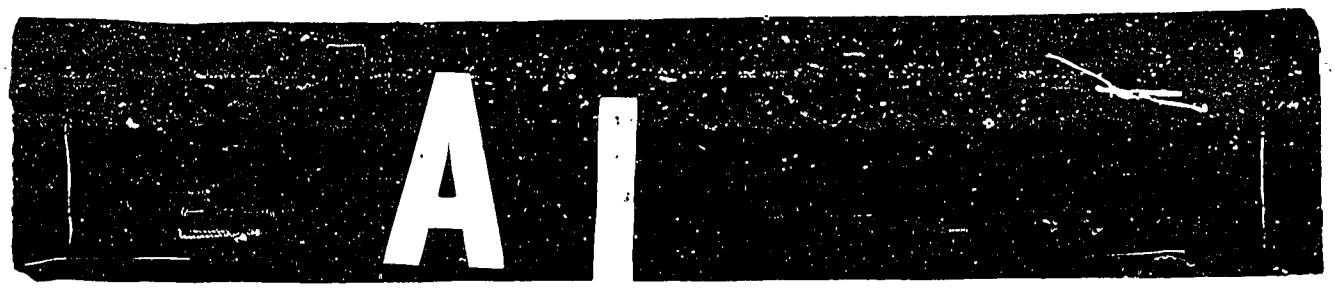

Revised: March 7, 1947

2. Minimum Inside Bend Radii - No. 1025 steel - equal to thickness of material.

   Aluminum alloys - (annealed and nonheat-treatable alloys to 1/2H). Equal to thickness of material.

   Aluminum alloys (heat treated) - equal to 2 x thickness of material.

3. Relief holes at compound bend intersections should be so located and large enough to include bend tangents and formed portion of intersection.

BOLTS AND SCREWS

1. Bolt lengths should be long enough to prevent bearing loads on threads with not more than two 1/16" pack washers.

2. Screw heads may be either the recessed or slotted type.

MISCELLANEOUS

1. Wing rib spacing = ± 1/4"

2. Fairing and cowling location = ± 1/4"

3. Maximum ovality of tubing at bends (fuel and oil lines, etc.) = 10% tube diameter.

4. On routed detail parts all unmarked outside corners may have 7/32 radii, and inside corners 5/32 radii, unless otherwise specified.

   On any other detail part, all unmarked outside corners may have a maximum of 1/16 radii, unless otherwise specified.

It shall be understood that the above limits apply to the dimensions controlling the fitting or mating of adjoining parts and to dimensions controlling material uniformity for strength.

Dimensions covering atmospheric or non-mating fits need no specific limits, nor do the general limits given above apply to them, in cases where the variations on the manufactured part are greater but still come within the generally accepted meaning of good workmanship for the class of work in which the design falls.

PREPARED
CHECKED
APPROVED

414 710

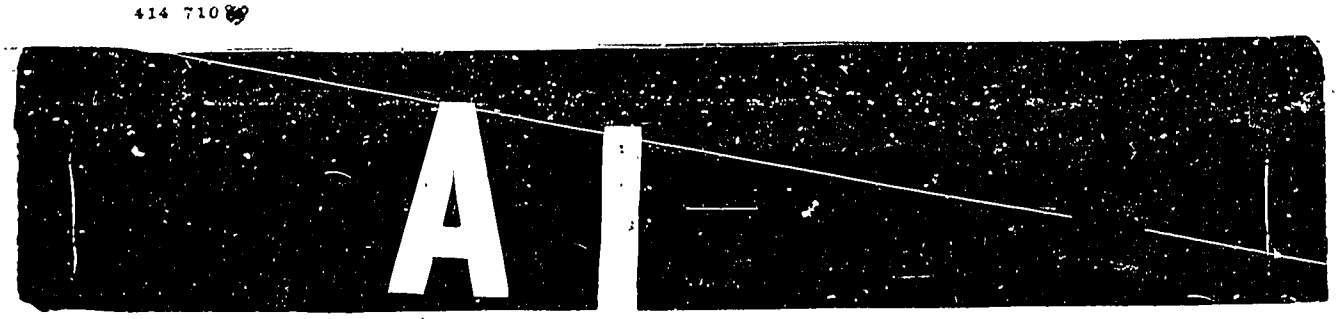

PIPER AIRCRAFT CORPORATION

LOCK HAVEN, PENNA.

September 4, 1942

Revised: March 29, 1943

PIPER SPECIFICATION NO. 9

ADDENDUM NO. 1

GLUING PROCEDURE FOR CASEIN GLUE

(1) DO NOT SAND SURFACES TO BE GLUED

(2) GLUE MIX TO CONSIST OF 1 OUNCE OF GLUE TO 1.8 OUNCES OF WATER

(3) GLUE MUST BE USED WITHIN 4 HOURS AFTER MIXING

(4) GLUING SURFACES MUST BE ABSOLUTELY CLEAN

(5) GLUED JOINTS MUST FIT PERFECTLY

(6) APPLY UNIFORM COAT OF GLUE TO BOTH SURFACES WITH SOFT BRUSH OR SPATULA

(7) ASSEMBLE PIECES WITHIN 5 MINUTES AFTER GLUE IS APPLIED AND APPLY PRESSURE WITHIN 20 MINUTES

(8) WIPE OFF EXCESS GLUE AFTER SPARS ARE IN PRESS

(9) APPLY FROM 100 TO 150 LBS. PER SQ. IN. TO JOINT

(10) SPARS MUST REMAIN IN PRESS AT LEAST 12 HOURS

(11) FRONT SPAR JOINT REQUIRES APPROXIMATELY 6-1/2 OUNCES OF GLUE MIXTURE ON EACH FACE

REAR SPAR JOINT REQUIRES APPROXIMATELY 4-1/2 OUNCES OF GLUE MIXTURE ON EACH FACE

(12) CLEAN ALL GLUE POTS AND BRUSHES EVERY 4 HOURS

(13) SPRUCE MUST CONFORM TO AN-S-6

PREPARED_____
CHECKED_____
APPROVED_____

E504 2M 3-42 SA

NO. 196-L ALBANENE A. & S. SMITH CO., PGH., PA.

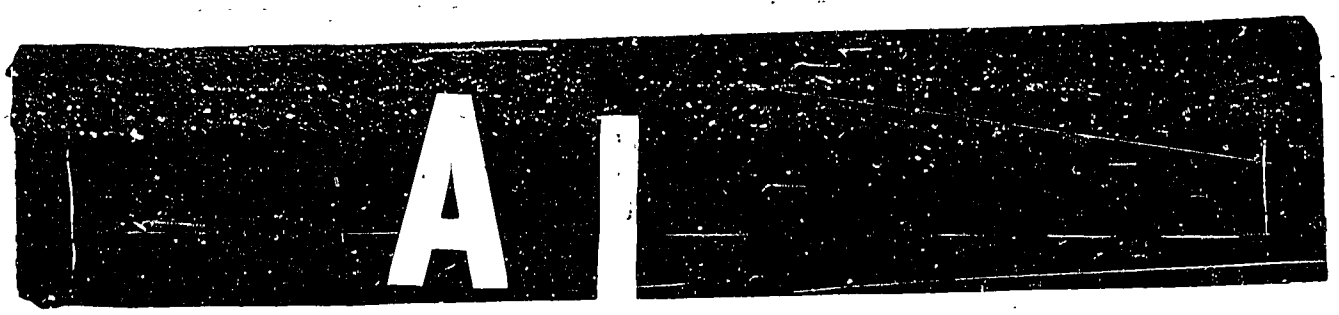

ADDENDUM NO. 2

11-16-48 ADDITION AND SUBSTITUTION OF MATERIALS:

1. A maximum of two 1/16" pack washers may be added under bolt heads or nuts, to correct for variations in material thicknesses within the tolerances permitted. If these washers are to be used continuously, they should be called for on the pertinent drawing.

2. #4130 steel tubing may be substituted for #1025 steel tubing of same diameter and wall thickness, in all structural parts except engine mount members.

ADDENDUM NO. 3

HOLES

1. Holes indicated as "REAM" may be produced by any tool, except a punch, providing a finish equivalent to Reaming can be obtained.

2. Holes of .250" diameter or smaller, when indicated by decimals without tolerances, will be understood to have a tolerance of + .010 except those for self threading screws, which
- .001
may vary + .005
- .001

MATERIALS

3. The dimensions and quality of materials shall conform to the accepted standards of the industry.

4. When drawing specifies "steel tubing", either seam welded or seamless tubing shall be considered satisfactory. When seamless tubing is required (because of the use of liners, etc.) the drawing shall specify "seamless tubing".

PREPARED
CHECKED
APPROVED

414 710

A

ADDENDUM NO. 4

MAGNETIC INSPECTION OF AN BOLTS

The following is the procedure to be employed for magnetic inspection of AN Bolts where such inspection is required.

The apparatus shall be standard for the functions to be performed. The bolts to be inspected shall be inspected by the Bi-Polar or longitudinal method.

The bolts to be inspected shall be free from grease or other matter which might interfere with the proper distribution and concentration, or with the intensity, character, or definition of the deposit of the magnetic substance.

After inspection, all bolts shall be satisfactorily demagnetized. Likewise, all bolts shall be demagnetized between successive magnetizing operations as necessary to obtain proper indications of defects.

The magnetic substance shall be completely removed from all bolts after inspection and demagnetizing.

All bolts which have satisfactorily met the requirements of magnetic inspection shall be permanently and legibly marked with the letter "M" or shall be dyed. Methods Engineering shall decide upon the method of marking.

If the letter "M" is used, it shall be marked on the head of the bolt by using a marking fluid which is harmless to the bolt or by impression stamping.

If a dye is employed for marking, it shall be an orange dye of the following formula:

One (1) part clear lacquer

Seven (7) parts lacquer thinner

Twelve (12) grams National Oil Scarlet No. 6G dye per Gallon

PREPARED
CHECKED
APPROVED

MAY 11 1943

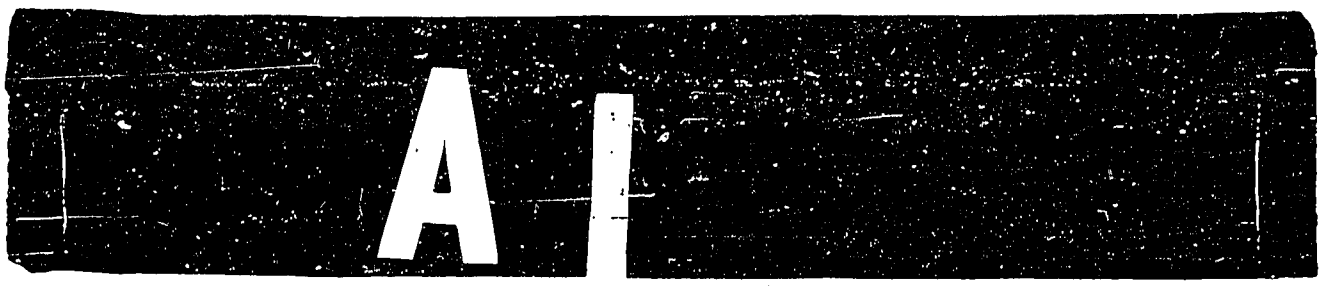

11-16-48

ADDENDUM NO. 5

PLACARDS

1. When using National Decal Company's decalcomanias for placards, a protective coating such as clear lacquer or transparent Scotch Tape shall be used.

Placards painted on by the screen process or Meyercord decalcomanias need no protective coating.

PREPARED
CHECKED
APPROVED

414 710

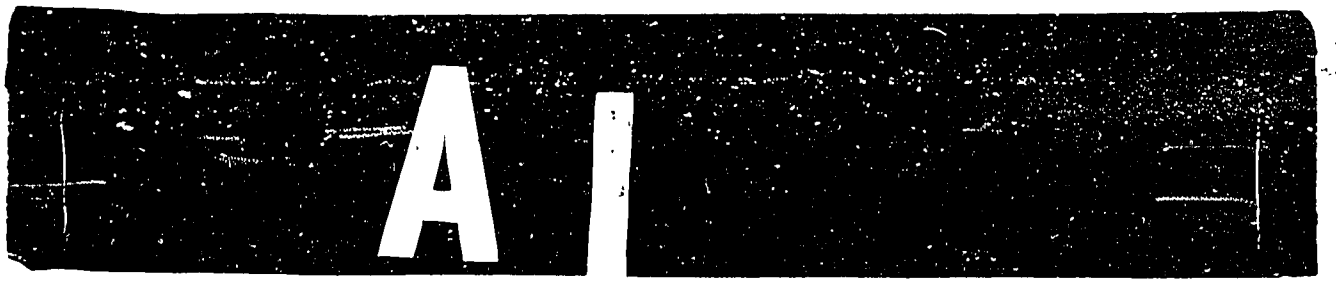

2-2-51

ADDENDUM NO. 6

HEAT TREATMENT OF 24S ALUMINUM ALLOYS

SOLUTION HEAT TREATMENT

1. Preparation of Material

   a. Before heat treating in the hot air furnace, oily parts shall be cleaned to prevent oxidation of surfaces.

   b. The racking or loading of parts shall be accomplished in such a manner as to insure separation between each part, to allow maximum circulation of the heat treating medium. Parts should never be "nested".

2. Heating

   a. Bring furnace to heat treating temperature before inserting parts.

   b. After parts are inserted bring furnace to heat treating temperature again before starting soaking period.

   c. Heat treat temperature for 24S (bare and alclad) shall be 910-930 degrees F.

   d. The soaking period shall be as follows:

PREPARED
CHECKED
APPROVED

414 710

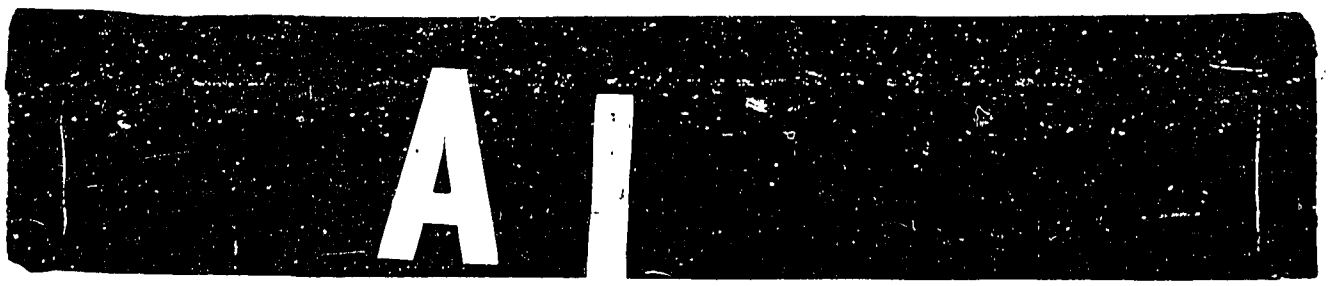

2-2-51

SOAKING PERIOD FOR SOLUTION HEAT TREATMENT OF 24S AND 24S ALCLAD

Thickness of Material Inch	Time in Minutes for Soaking after Bath or Furnace Temperature has Returned to Specified Value.			
	Material in Annealed Condition		Material in Heat Treated Condition	
	Salt Bath	Air Furnace	Salt Bath	Air Furnace
.020 and Less	15	20	10	10
.020 to .032	20	25	10	15
.032 to .063	25	30	15	20
.063 to .125	30	45	20	30
.125 to .250	45	60	25	60
.250 to .500	60	90	30	90
Over .500	As required by the particular parts involved.			

Note: 1. Times given are approximate and are subject to adjustments as conditions vary.

2. The air furnace is considered to have natural air circulation. When equipped with forced circulation, soaking periods are shortened to nearly those for salt baths.

3. Soaking period is not extremely critical, except for Alclad, which should be brought up to temperature as quickly as possible and soaked for the shortest possible time.

4. As noted in table, previous thermal treatment

PREPARED
CHECKED
APPROVED

414 710

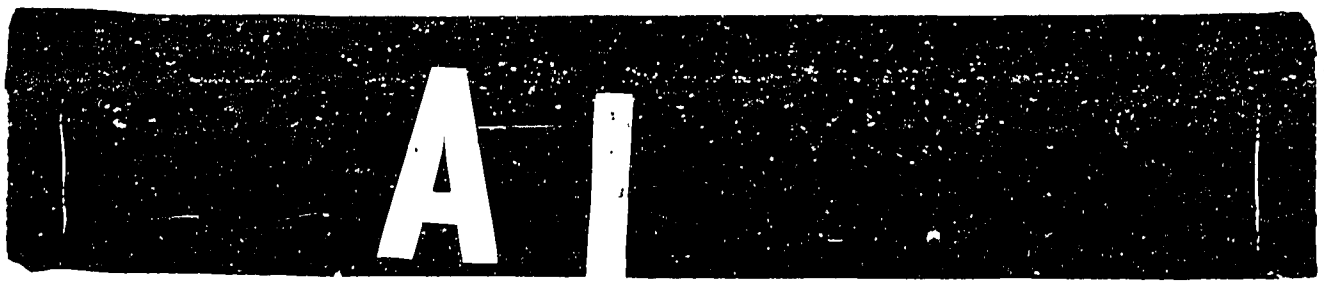

2-2-51

affects soaking time. When material has previously been heat treated it generally requires a shorter soaking period.

3. Quenching

a. Parts shall be quenched in cold water. Water temperature at time of quenching shall be no higher than 85°F and shall not exceed 100°F at any time during quench.

b. The quenching tank shall be supplied with a constant supply of running water in order to maintain a minimum temperature and also to prevent a concentration of dissolved salts when the part is heated in a salt bath.

c. The time consumed in transferring parts from the furnace to the quench tank shall not exceed 10 seconds.

d. All parts that have been heated in a salt bath shall be thoroughly washed to remove all traces of adhering salt.

4. Age - Hardening

a. At room temperature, 70°F, parts made of 24S are practically completely age hardened to T4 temper in one day. (Very slight additional changes continue for 10 days or more).

b. Freshly quenched 24S has about 1/4 of the yield strength of the T4 temper and does not gain perceptibly in the first hour. During the second hour the strength approximately doubles.

PREPARED
CHECKED
APPROVED

414 710



c. 24S will maintain its formability for approximately 24 hours if refrigerated at 32°F, and for at least a week at 0°F.

2-2-51

ANNEALING

1. For a full anneal for relief of hardness caused by cold working, heat 24S alloys to a temperature of from 640°F to 670°F, and cool slowly in air.

   Note: Avoid higher temperatures since they produce a hardening effect.

2. For a partial anneal for relief of hardness caused by previous heat treatment, use same procedure.

   (As an alternate method, the alloys may be heated to from 750°F to 800°F, and quenched in air or cold water. Either treatment will soften the material so that it is suitable for all except the most severe forming operations.)

PREPARED
CHECKED
APPROVED

414 710

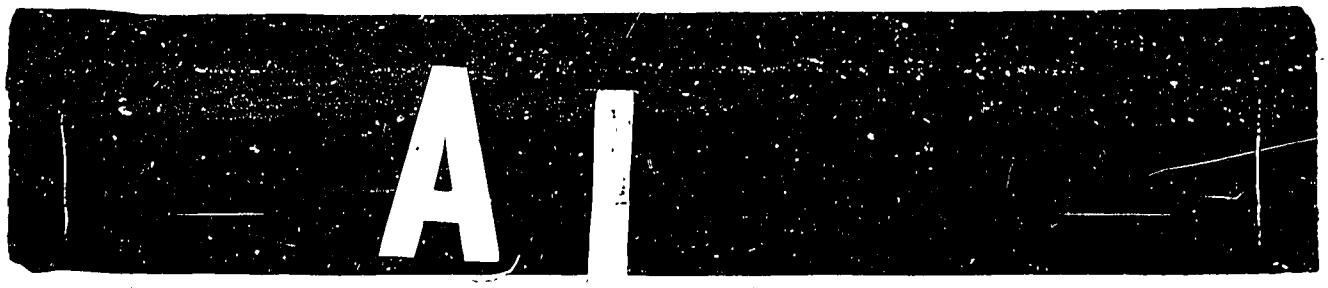

ADDENDUM NO. 7

HEAT TREATMENT OF 4130 STEEL

2-2-51

1. General

a. A furnace capable of maintaining and holding specified temperatures within ±25°F shall be used.

b. Oil quench tanks shall be used.

2. Temperature

Temperature limits shall be as follows:

Operation	Procedure	Temp. Limits Min. °F	Max. °F
Normalizing	Heat to temp. Cool in Still air	1600	1700
Annealing	Heat to Temp. Furnace cool to 900°	1525	1575
Hardening	Heat to Temp. Quench in Oil	1575	1625

3. Soaking

Soaking periods for hardening normalizing and annealing shall be as follows:

(See Table II on Page 12)

PREPARED
CHECKED
APPROVED

414 710

A1

2-2-51

TABLE II

SOAKING PERIODS

Dia. or Thickness in Inches	Time of heating to req'd. temp. (Approx. Hrs.)	Time of holding (Approx. Hrs.)
Up to 1/4	1/2	1/4
1/4 to 1	3/4	1/2
1 to 2	1 1/4	1/2
2 to 3	1 3/4	3/4
3 to 4	2 1/4	1
4 to 5	2 3/4	1
5 to 8	3 1/2	1 1/2

4. Tempering

Tempering temperatures shall be as follows:

Rockwell No.		Strength Required	Temp. F°		Time Req'd.
Min.	Max.		Min.	Max.	
C25	C32	120,000-145,000	1000	1200	1 Hr.
C32	C38	145,000-170,000	850	1050	1 Hr.
C38	C41	170,000-190,000	700	900	1 Hr.

PREPARED
CHECKED
APPROVED

414 710

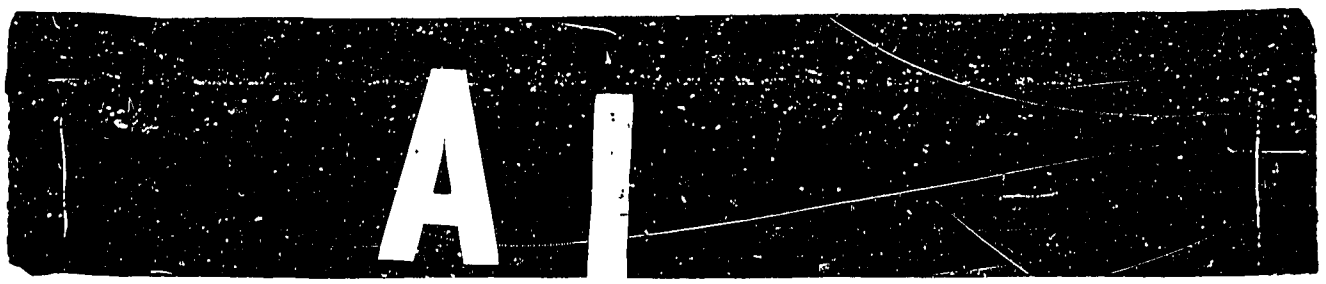

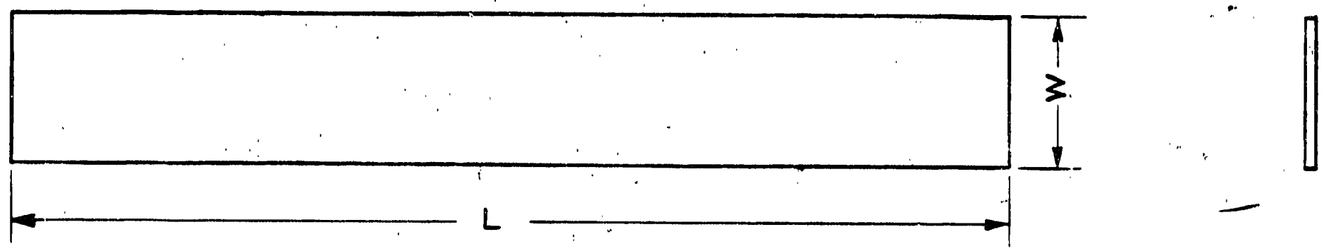

PART NO.	L	W	MODEL	PER PLANE	NEXT ASSEMBLY
10016-2	14 5/8	7/8	L-14	2	91513, 91525
10016-3	44 7/16	3/4	L-14	1	91515
10016-4	16 7/8	7/8	L-14	1	91529
10016-5	17 7/8	1 3/8	L-14	2	91569
10016-6	33 1/8	3/4	J5C	4	10185
10016-7	25	1/2			
10016-8	19	1/2			
10016-9	12 3/4	1/2			
10016-10	9 3/4	1/2			
10016-11	7 1/2	1/2			
10016-12	5	1/2			
10016-13	16 1/2	1/2			
10016-14	30	1			
10016-15	17 3/4	3/4			
10016-16	36	3/4			
10016-17	5	1 1/8			
10016-18	28	1 1/8			
10016-19	18 1/4	1/2			

PART NO.	L	W	MODEL	PER PLANE	NEXT ASSEMBLY

NOTE:

SEE ALSO DWG. 84702 & 86082.

LET.	REVISION	DATE	BY
J	-19 ADDED	12-2-49	K.D.
H	-17 & -18 ADDED	5-13-49	H.K.
G	17 3/4 WAS 21 FOR -15	3-3-48	RC
F	-15 & -16 ADDED	12-16-47	RC
E	10016-14 ADDED	3-14-47	RC
D	7-8-9-10-11-12-13 ADDED	7-25-46	J.D.B.
C	J5C MODEL REF. CANCELED FOR -6	12-5-45	H.R.K.
B	10016-6 ADDED	11-6-45	R.R.K.
A	L DIM: 17 7/8 WAS 14 11/16 FOR -5	8-7-45	HMZ

MODEL	PER PLANE	NEXT ASSEMBLY	SUPERSEDES	SUP. BY.
NOTED	NOTED	NOTED		

PIPER AIRCRAFT CORP.
LOCK HAVEN, PENNA.

PART No.	No. REQ.	SIZE	DESCRIPTION
		.065 X NOTED	S.A.E. F-50 FELT
		MATERIAL	
SCALE		TOTAL WT.—LBS.	

FINISH—PIPER SPECIFICATION #10

MANUFACTURING PRACTICES—PIPER SPECIFICATION #9

STRIPS — FELT
(SHEET 3)

DRAFTSMAN	CHECKER	STANDARDS
J.B.M. 7-6-45	R.E.T. 7-6-45	

10016

400

A400

WAS 1060
D1036-A

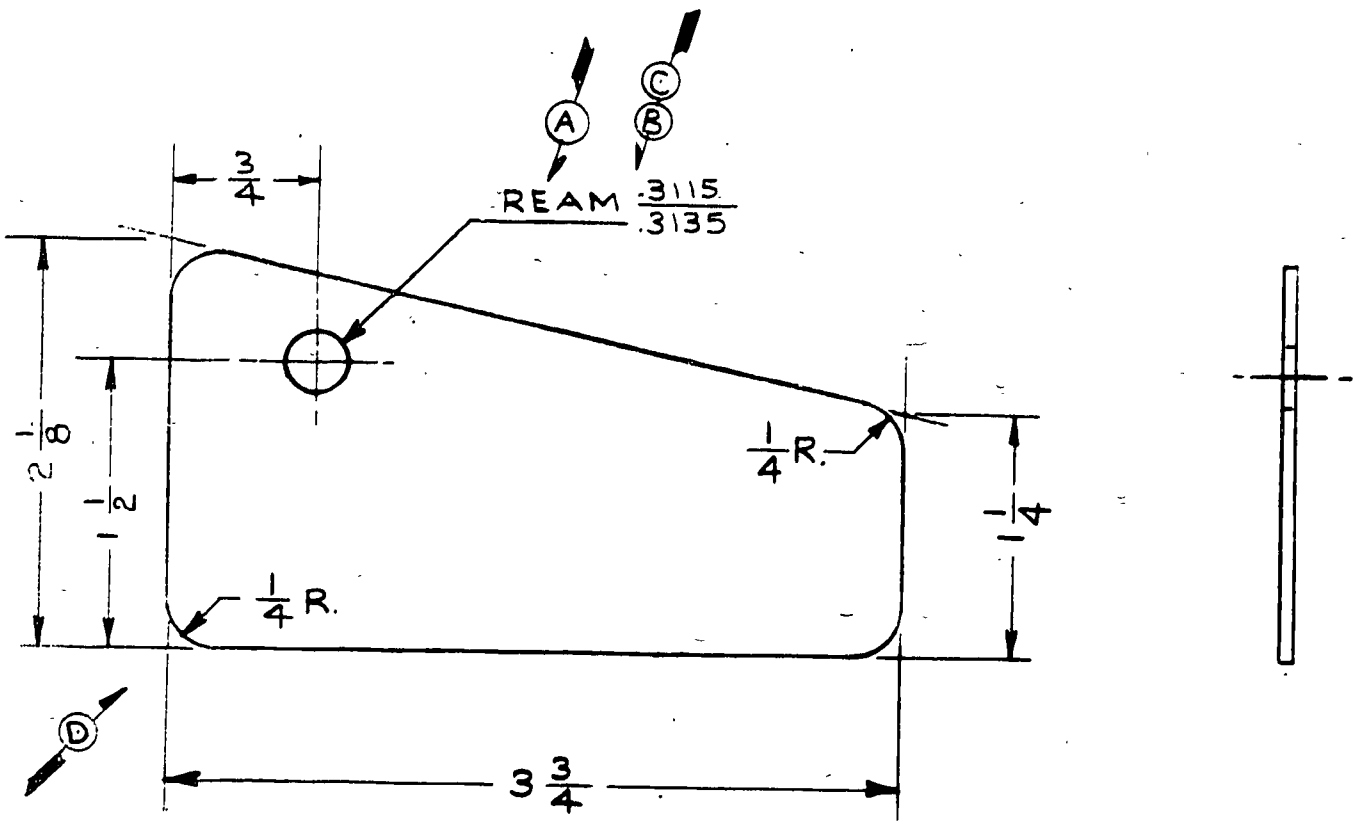

H E F

LET	REVISION	DATE	BY	MODEL	PER PLANE	NEXT ASSEMBLY	SUPERSEDES	SUP. BY
L	REDRAWN WITHOUT CHANGE	6-11-51	I.M.M.	L-14	8	90420-80418		
K	J3 N.A. 16462 16472 WERE 15403	3-6-46	E.L.N.	J5C	8	16462, 16472		
J	J5C N.A. 16343 REMOVED	11-30-45	I.D.B.	J3	8	15462-16472		
H	L-14 MODEL REF. ADDED	3-14-45	E.L.N.	HE-J5	8	11679		
G	REDRAWN & REVISED	6-12-44	I.D.B.	J5D	8	11673-14835		
F	J5C NEXT ASSY. 16343 WAS 11673	11-12-43	R.E.T.	J4	8	10193		
E	J3 MODEL REF. ADDED	10-30-43	R.E.T.					
D	NOTE REMOVED; 1/4 R. ADDED	8-26-43	L.R.					
C	REAM .3115/.3135 WAS .313 +.007 HOLE	6-17-43	R.R.F.					
B	TOLERANCE ADDED	2-23-43	R.T.M.					
A	.313 HOLE WAS 5/16 DRILL	10-7-42	R.E.S.					

THIS DRAWING IS THE PROPERTY OF THE PIPER AIRCRAFT CORP. AND ITS POSSESSION BY UNAUTHORIZED PERSONS SHALL NOT BE CONSTRUED AS PERMISSION TO REPRODUCE FOR SALE IN WHOLE OR IN PART ANY DEVICES SHOWN THEREON.

PIPER AIRCRAFT CORP.
LOCK HAVEN, PENNA.

PART NO.	NO. REQ.	SIZE	DESCRIPTION
		.040 × 2 1/8 × 3 3/4	52 S-1/2H. ALUM.
		MATERIAL	

SCALE FULL SIZE | TOTAL WT.—LBS.

FINISH—PIPER SPECIFICATION # 10

MANUFACTURING PRACTICES—PIPER SPECIFICATION # 9

GUSSET – STRUT
POINT "N" BRACE

M.H.	M-D-L.		
10-17-40	1-7-41		**10021**
DRAFTSMAN	CHECKER	STANDARDS	

A4

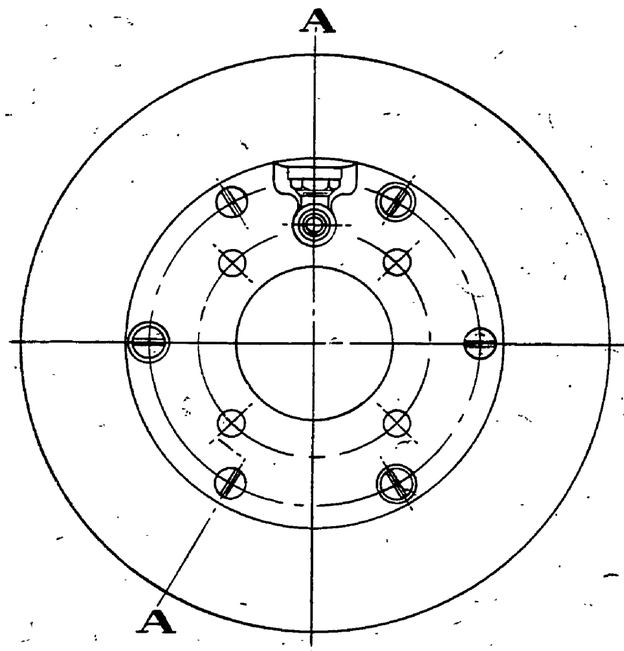

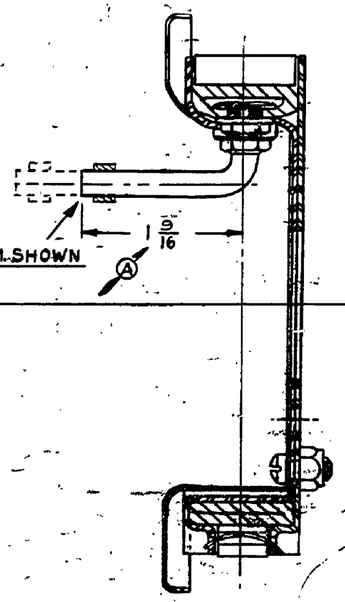

SECTION A-A

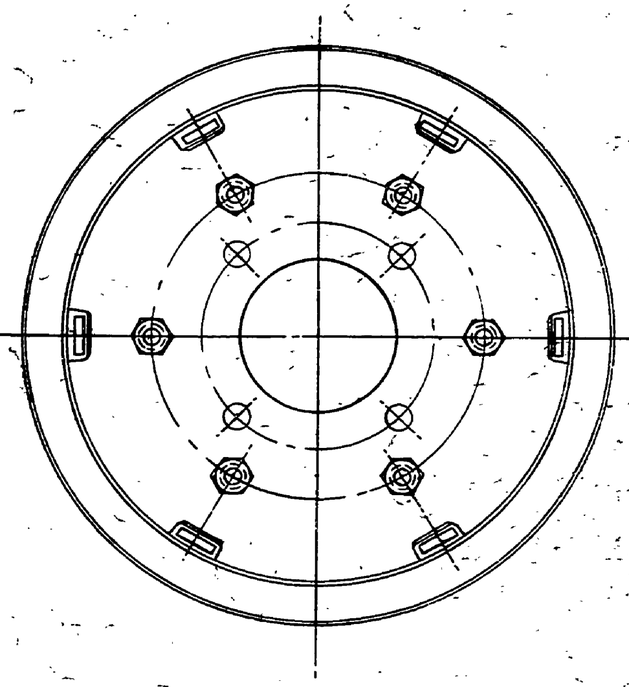

ASSEMBLY PART NO. D-2-113 PURCHASED FROM HAYES INDUSTRIES, INC. JACKSON, MICH. AND REWORKED AS SHOWN.

LET.	REVISION	DATE	BY
B	J3 N.A. 10549 WAS 31513	4-8-46	L.R.
A	1 9/16 WAS 7/8	11-19-45	C.E.K.

THIS DRAWING IS THE PROPERTY OF THE PIPER AIRCRAFT CORP. AND ITS POSSESSION BY UNAUTHORIZED PERSONS SHALL NOT BE CONSTRUED AS PERMISSION TO REPRODUCE FOR SALE, IN WHOLE OR IN PART, ANY DEVICES SHOWN THEREON

MODEL	PER PLANE	NEXT ASSEMBLY	SUPERSEDES	SUP. BY
J3	B	10549	42633	
J5C	B	10025	42633	

PIPER AIRCRAFT CORP.
LOCK HAVEN, PENNA.

PART NO.	NO. REQ.	MATERIAL
SCALE FULL SIZE		TOTAL WT.—LBS.
FINISH—PIPER SPECIFICATION #10		
MANUFACTURING PRACTICES—PIPER SPECIFICATION #9		

BRAKE ASSY.—5×1 HAYES EXPANDER TUBE

I.M.M.	C.E.T.		
5-23-45	8-27-45		10024
DRAFTSMAN	CHECKER	STANDARDS	

A694

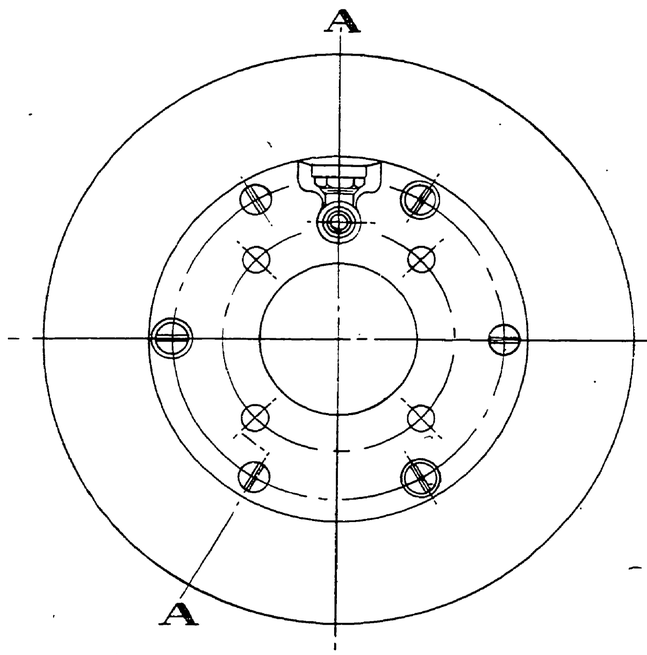

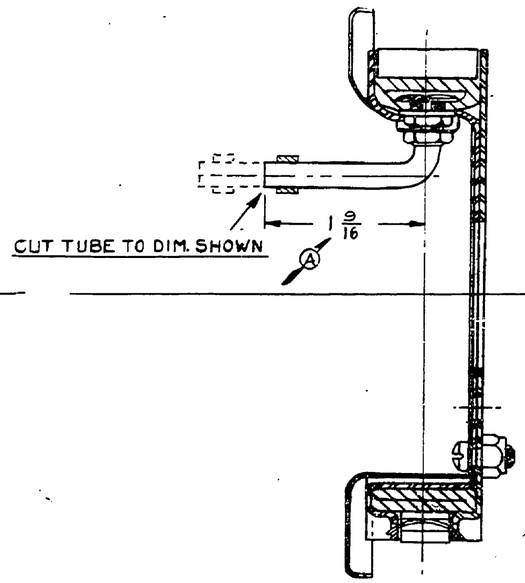

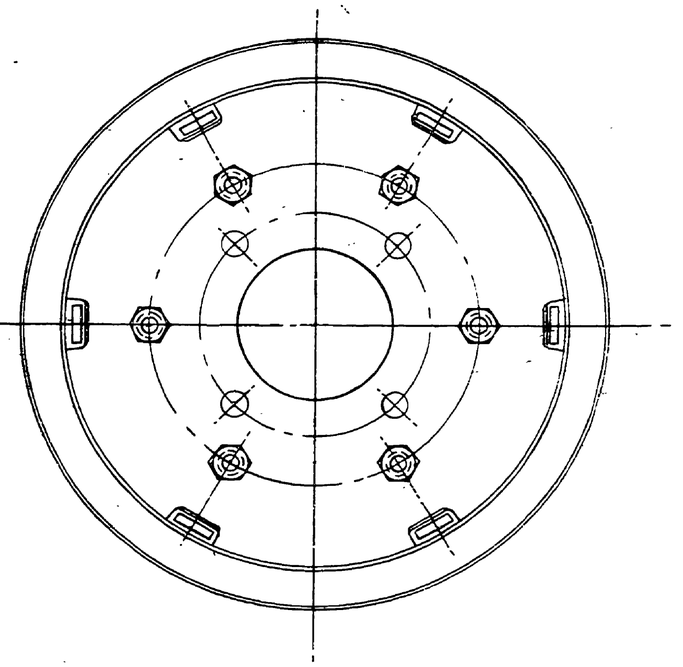

SECTION A-A

ASSEMBLY PART NO. D-2-113 PURCHASED FROM HAYES INDUSTRIES, INC. JACKSON. MICH. AND REWORKED AS SHOWN.

THIS DRAWING IS THE PROPERTY OF THE PIPER AIRCRAFT CORP. AND ITS POSSESSION BY UNAUTHORIZED PERSONS SHALL NOT BE CONSTRUED AS PERMISSION TO REPRODUCE FOR SALE, IN WHOLE OR IN PART, ANY DEVICES SHOWN THEREON

MODEL	PER PLANE	NEXT ASSEMBLY	SUPERSEDES	SUP. BY
J3	2	10549	42633	
J3C	2	10025	42683	

LET.	REVISION	DATE	BY
B	J3 N.A. 10549 WAS 31513	4-8-46	L.R.
A	1 9/16 WAS 2 1/8	11-19-45	C.E.K

PIPER AIRCRAFT CORP.
LOCK HAVEN, PENNA.

PART NO.	NO. REQ.	MATERIAL
SCALE FULL SIZE		TOTAL WT.—LBS.
FINISH—PIPER SPECIFICATION #10		
MANUFACTURING PRACTICES—PIPER SPECIFICATION #9		

BRAKE ASS'Y.—5×1 HAYES EXPANDER TUBE

DRAFTSMAN	CHECKER	STANDARDS
L.M.M. 8-23-45	P.E.T. 8-27-45	

10024

A694

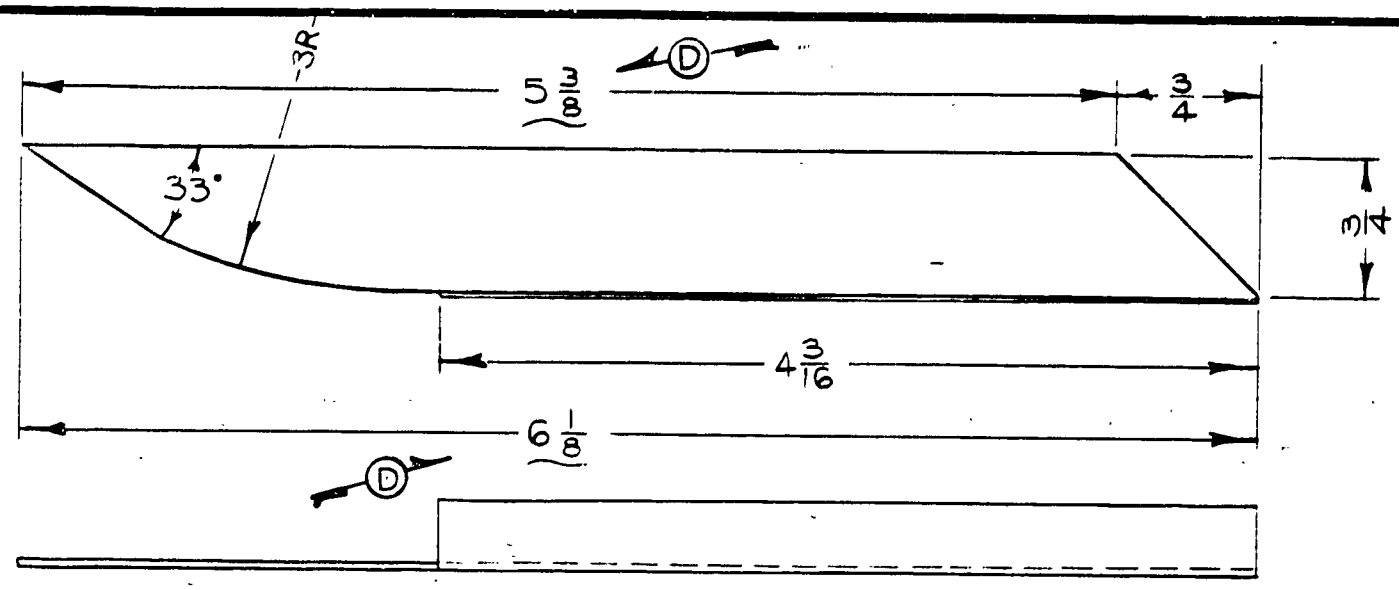

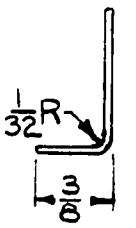

PART NO.	MODEL	PER SHIP	NEXT ASSEMBLY
10031 -	J5C	16	10702, 10712, 10722, 10732, 10692
	L-14	28	90465, 90450, 90453, 90462, 90463, 90468, 90478, 90518 90466, 90520, 90519, 90467, 90522, 90521, 90524, 90523
10031-1	J5C	2	10702, 10692
	L-14	2	90451, 90452

10031 SHOWN
10031-1 OPPOSITE

PART No.	No. REQ.	SIZE	DESCRIPTION
		.025 × 1 1/8 × 6 1/8	3S - 1/2 H. ALUM.

MATERIAL

SCALE FULL SIZE — TOTAL WT.—LBS.

FINISH—PIPER SPECIFICATION #10

MANUFACTURING PRACTICES—PIPER SPECIFICATION #9

FORMER - WING RIB AILERON FALSE SPAR

LET.	REVISION	DATE	BY	MODEL	PER PLANE	NEXT ASSEMBLY	SUPERSEDES	SUP. BY
				NOTED	NOTED	NOTED		
D	5 3/8 WAS 5 9/16 & 6 1/8 WAS 6 5/16	2-26-46	BC					
C	L-14 N.A 90456 & 90517 REMOVED	6-12-45	J.B.M					
B	REDRAWN & REVISED	3-16-45	E.L.N					

PIPER AIRCRAFT CORP.
LOCK HAVEN, PENNA.

E.L.N.	R.E.TITUS	
3-16-45	3-16-45	
DRAFTSMAN	CHECKER	STANDARDS

10031

PENCILTEX A. & B. SMITH CO., PGH., PA.

FOR METAL SPAR WING

A5

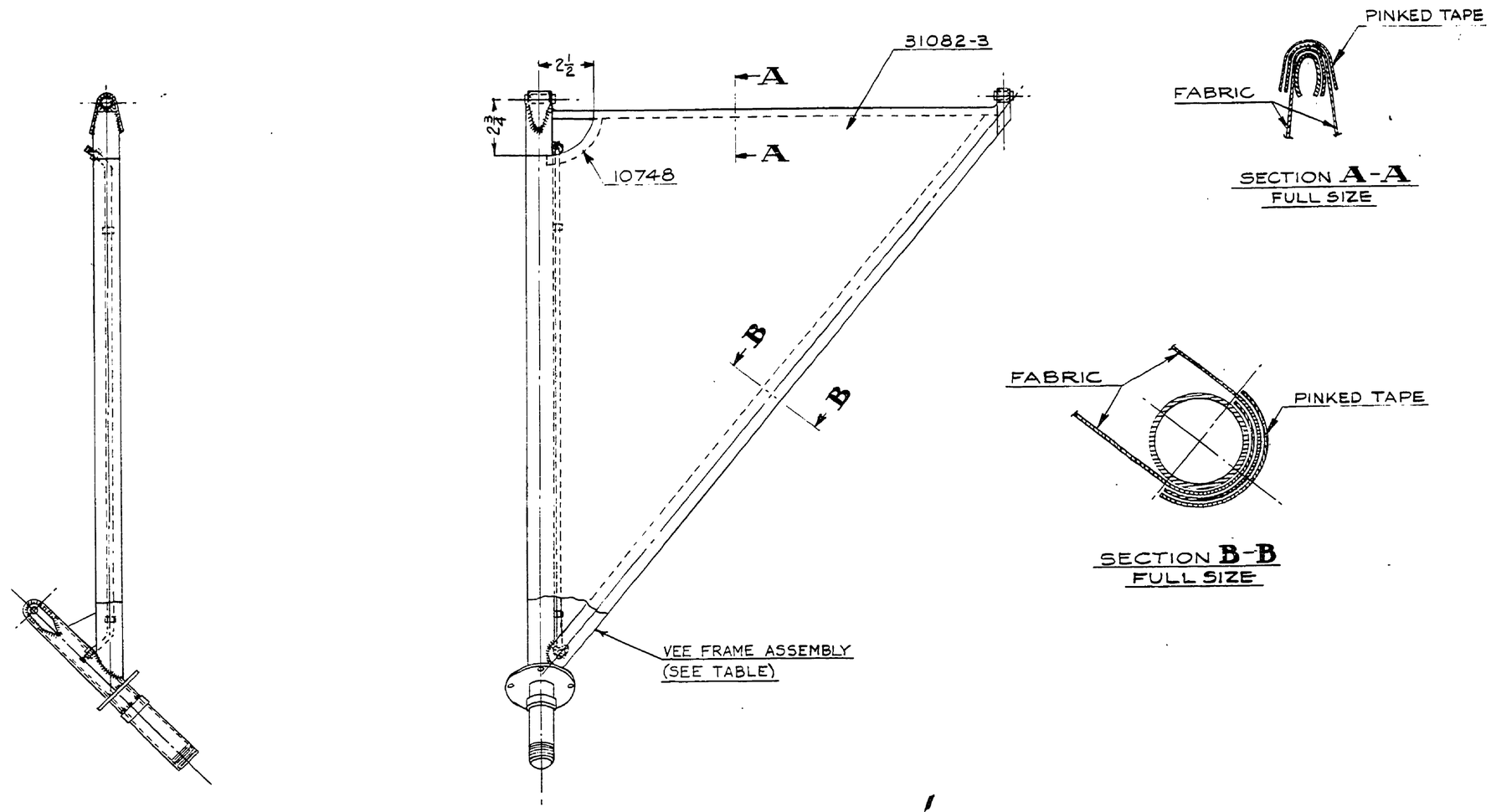

NOTES:

1. FABRIC DOPED TO FRAME AND OVERLAPPED. SEAMS DOPED AND COVERED WITH PINKED TAPE AS SHOWN (OVERLAP NOT LESS THAN 1 IN.)

ASSY. NO.	VEE FRAME NO.	REMARKS
10032	10033	L.H. SHOWN
10032-1	10033-1	R.H. OPPOSITE
10032-2	10033-2	L.H. SHOWN
10032-3	10033-3	R.H. OPPOSITE
10032-4	10033-4	L.H. SHOWN
10032-5	10033-5	R.H. OPPOSITE
10032-6	10033-6	L.H. SHOWN

PART No.	No. REQ.	SIZE	DESCRIPTION / MATERIAL
10033-6 / 10033-5	1	VEE FRAME ASSEMBLY	SEE TABLE
10033-4 / 10033-3	1	VEE FRAME ASSEMBLY	SEE TABLE
	1	2×94 L.	PINKED TAPE - SAE SPEC. #AMS 3804 OR #AMS 3806
31082-3	2	FABRIC	
10748	1	GROMMET	
10033-2 / 10033-1 / 10033	1	VEE FRAME ASSEMBLY	SEE TABLE

SCALE 3 IN. = 1 FT. & NOTED — TOTAL WT.—LBS.

FINISH—PIPER SPECIFICATION #10

MANUFACTURING PRACTICES—PIPER SPECIFICATION #9

LET.	REVISION	DATE	BY
K	-5 & -6 ADDED	10-17-50	FCS
J	10032-3 & 10032-4 ADDED	8-15-50	FCS
H	ALTERNATE PINKED TAPE SPEC. ADDED	3-7-50	HRK
G	NOTE 2 REM., -2 & 10033-2 ADD.	6-21-49	R.R.
F	1 OF 31082-3 WAS 31082-2	12-13-46	BC
E	PINKED TAPE SPEC. ALT. REM.	10-28-46	I.D.B.
D	REDRAWN & REVISED	7-9-46	C.E.K.

MODEL	PER PLANE	NEXT ASSEMBLY	SUPERSEDES	SUP. BY
33	N.L.R.	31513	31463	

PIPER AIRCRAFT CORP.
LOCK HAVEN, PENNA.

VEE ASSEMBLY - COVERED LANDING GEAR

DRAFTSMAN	CHECKER	STANDARDS
C.E.K. 7-3-46	R.E.T. 7-3-46	

10032

THIS DRAWING IS THE PROPERTY OF THE PIPER AIRCRAFT CORP. AND ITS POSSESSION BY UNAUTHORIZED PERSONS SHALL NOT BE CONSTRUED AS PERMISSION TO REPRODUCE FOR SALE, IN WHOLE OR IN PART, ANY DEVICES SHOWN THEREON

A695

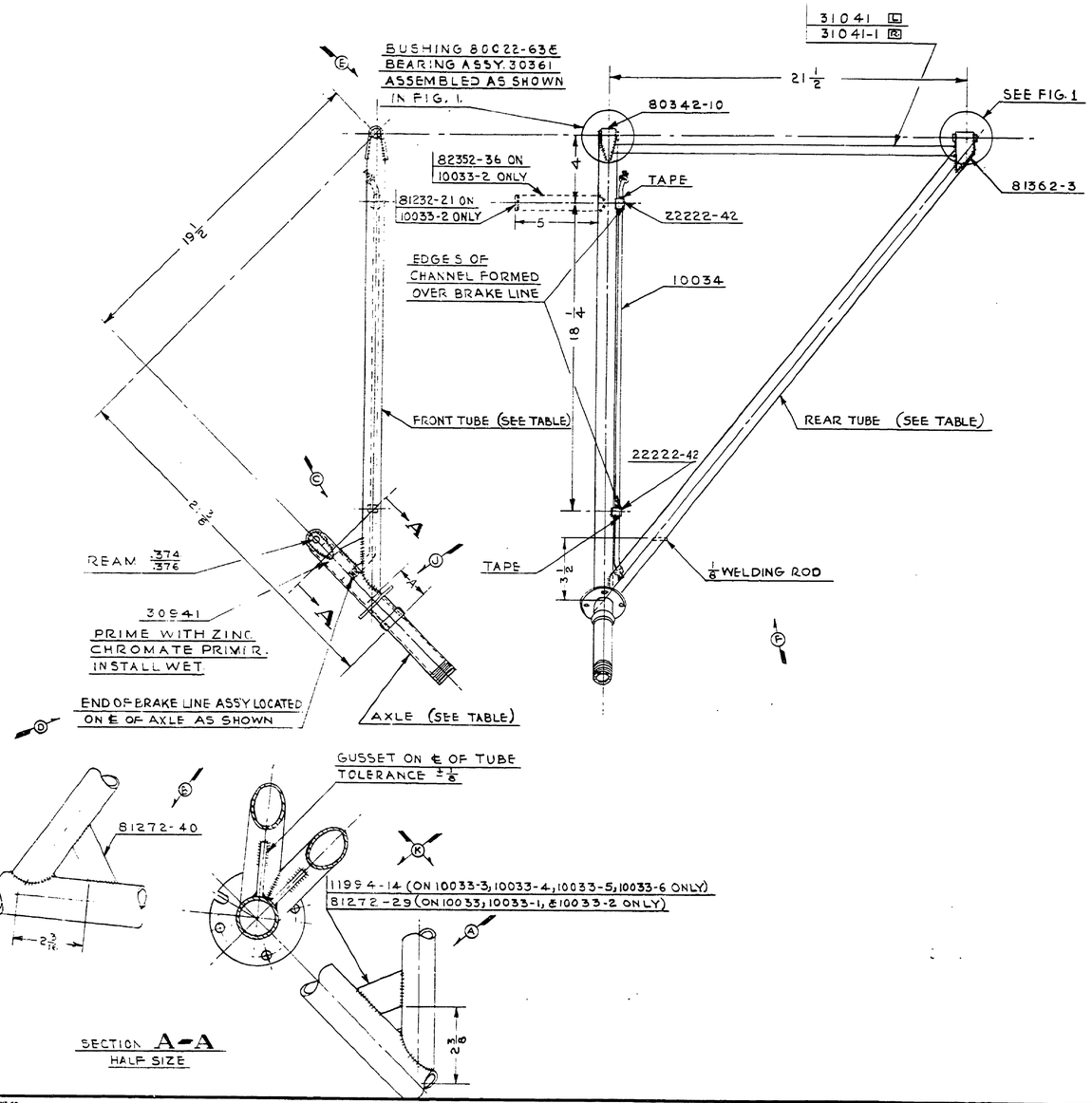

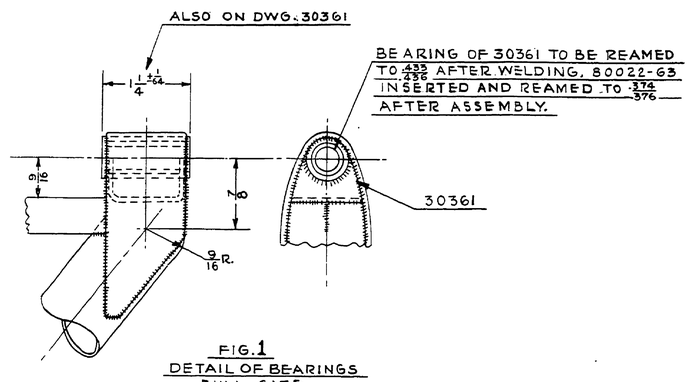

FIG. 1
DETAIL OF BEARINGS
FULL SIZE

ASSY. NO.	AXLE NO.	FRONT TUBE	REAR TUBE	A	REMARKS
10033	31472	82352-5	82352-28	2 1/4	L.H. SHOWN
10033-1	31472-1	82352-5	82352-29	2 1/4	R.H. OPPOSITE
10033-2	31472	82352-5	82352-28	2 1/4	L.H. WITH TUBE 82352-36 & 81232-21 ADD.
10033-3	12965-1	82352-37	82352-39	2 1/4	R.H. OPPOSITE
10033-4	12965	82352-37	82352-38	2 1/4	L.H. SHOWN
10033-5	12965-1	82352-40	82352-41	2 3/8	R.H. OPPOSITE
10033-6	12965	82352-40	82352-42	2 3/8	L.H. SHOWN

PARTS MARKED L USED ON L.H. ASSEMBLY ONLY.
PARTS MARKED R USED ON R.H. ASSEMBLY ONLY.

PART NO.	No. REQ.	SIZE	DESCRIPTION / MATERIAL
11994-14	1		GUSSET-FRONT (ON 10033-3, 10033-4, 10033-5, 10033-6 ONLY)
82352-42	1	TUBE	SEE TABLE
82352-41			
82352-40	1		
82352-39	1	TUBE	SEE TABLE
82352-38			
82352-37	1	TUBE	SEE TABLE
12965-1	1	AXLE ASSY.	SEE TABLE
12965			
	1	1/8 x 1 1/4 L.	WELDING ROD
82352-36	1	TUBE	(ON 10033-2 ONLY)
81232-21	1	DISC	(ON 10033-2 ONLY)
	1	3/4 x 3 LONG	FRICTION TAPE
82352-5	1	TUBE	SEE TABLE
82352-29	1	TUBE	SEE TABLE
82352-28			
81362-3	1	PLATE	
81272-29	1	GUSSET-FRONT	(ON 10033, 10033-1, 10033-2 ONLY)
81272-40	1	GUSSET-REAR	
80342-10	1	STRAP	
80022-63	2	BUSHING	
31472-1	1	AXLE ASSEMBLY	SEE TABLE
31472			
31041-1	1	CHANNEL	
31041			
30941	1	PLUG	
30361	2	BEARING ASSEMBLY	
22222-42	2	CHANNEL	
10034	1	BRAKE LINE ASSEMBLY	

LET.	REVISION	DATE	BY
L	REDRAWN WITHOUT CHANGE	6-23-51	H.M.H.
K	11994-14 & NOTES ADDED	3-21-51	H.M.H.
J	-5, -6 & DIM. A ADDED	10-19-48	R.C.S.
H	10033-3 & 10033-4 ADDED	8-19-48	R.C.S.
G	"BRAZE NOTE" REMOVED	6-3-48	C.K.
F	WELDING ROD ADDED	5-4-48	R.C.
E	82352-36, 81232-21 & 2-DIA. ADDED	6-21-48	R.R.
D	NOTE ADDED 11/64 & 23/32	7-8-46	C.&K.
C	10034 VIEW REVISED	11-21-45	J.E.N.
B	81272-40 WAS 81272-2	11-21-45	J.E.N.
A	ADDED VIEWS AT SECTION A-A	11-21-45	J.E.N.

MODEL: 10033 | PER PLANE | NEXT ASSEMBLY | SUPERSEDES: 10033 | SUP. BY: 31433

THIS DRAWING IS THE PROPERTY OF THE PIPER AIRCRAFT CORP. AND ITS POSSESSION BY UNAUTHORIZED PERSONS SHALL NOT BE CONSTRUED AS PERMISSION TO REPRODUCE FOR SALE, IN WHOLE OR IN PART, ANY DEVICES SHOWN THEREON.

PIPER AIRCRAFT CORP.
LOCK HAVEN, PENNA.

VEE ASSEMBLY — LANDING GEAR

C.E.K.	R.E.T.	
8-27-45	8-29-45	10033
DRAFTSMAN	CHECKER	STANDARDS

PHILADELPHIA BLUE PRINT CO.

A829

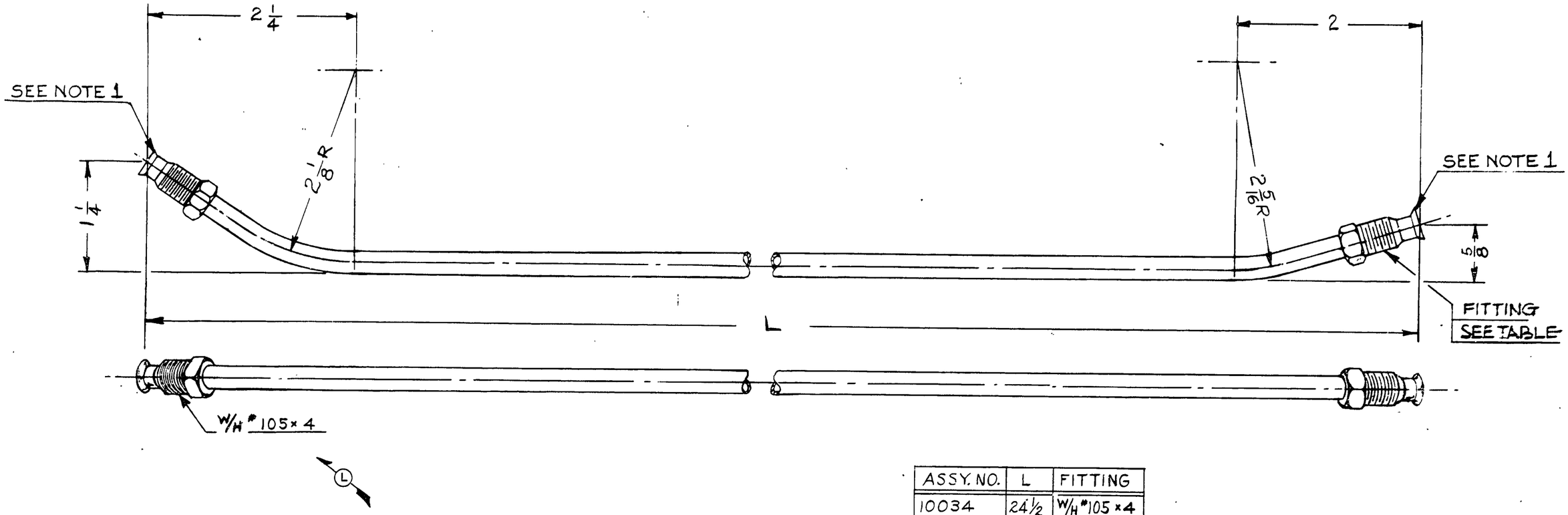

ASSY. NO.	L	FITTING
10034	24 1/2	W/H #105 x 4
10034-2	18 1/2	W/H #41 x 4
10034-3	22 3/4	W/H #41 x 4
10034-4	18 1/2	W/H #105 x 4

NOTE:

1. FLARES FORMED PER DWG. 82551.

LET.	REVISION	DATE	BY.
L	W/H #105 x 4 WAS 84352; W/H #41 x 4 WAS 84322	6-18-51	H.R.K.
K	-4 ADDED	4-19-49	C.K.
J	-3 ADDED	5-21-48	J.C.B.
H	84322 & FITTING REFADDED	4-21-48	RC
G	-2 & TABLE ADDED	11-14-47	J.C.B.
F	COPPER WAS 3S-0 ALUM.	12-30-46	H.M.Z.
E	3S-0 ALUM. WAS 2S-0 ALUM.	10-17-46	C.E.K.
D	REDRAWN & REVISED	7-9-46	C.E.K.

THIS DRAWING IS THE PROPERTY OF THE PIPER AIRCRAFT CORP. AND ITS POSSESSION BY UNAUTHORIZED PERSONS SHALL NOT BE CONSTRUED AS PERMISSION TO REPRODUCE FOR SALE, IN WHOLE OR IN PART, ANY DEVICES SHOWN THEREON.

MODEL	PER PLANE	NEXT ASSEMBLY	SUPERSEDES	SUP. BY
J3	2	10033		

PIPER AIRCRAFT CORP.
LOCK HAVEN, PENNA.

	SEE TABLE	W/H #41 x 4 FLARED TUBE NUT
82551	DWG. REF. ONLY	TUBE END FLARES
	SEE TABLE	W/H #105 x 4 INVERTED FLARED TUBE NUT
	1/4 x .032 x NOTED	COPPER TUBE
PART No.	No. REQ.	SIZE / DESCRIPTION
		MATERIAL

SCALE FULL SIZE — TOTAL WT.—LBS.

FINISH—PIPER SPECIFICATION #10

MANUFACTURING PRACTICES—PIPER SPECIFICATION #9

LINE ASSEMBLY - BRAKE

DRAFTSMAN	CHECKER	STANDARDS
C.E.K. 7-1-46	R.E.T. 7-1-46	

10034

A401

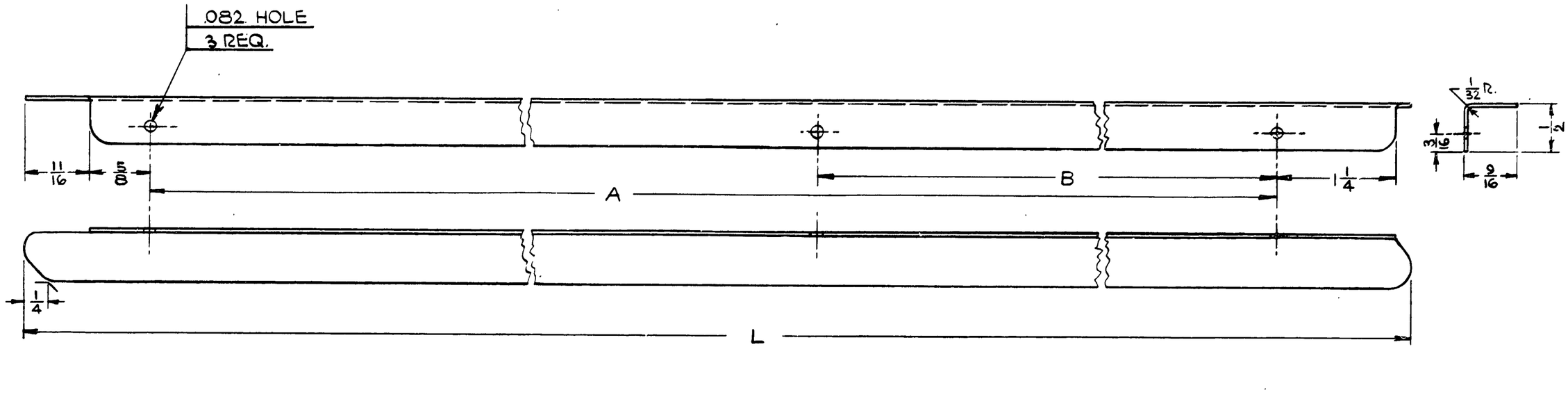

PART NO.	L	A	B
10049	22 3/16	20 1/8	10 1/16
10049-2	22	19 5/16	9 5/8

ALL OUTSIDE CORNERS 7/32 RADII
ALL INSIDE CORNERS 5/32 RADII

THIS DRAWING IS THE PROPERTY OF THE PIPER AIRCRAFT CORP. AND ITS POSSESSION BY UNAUTHORIZED PERSONS SHALL NOT BE CONSTRUED AS PERMISSION TO REPRODUCE FOR SALE, IN WHOLE OR IN PART, ANY DEVICES SHOWN THEREON

LET.	REVISION	DATE	BY
B	TABLE &-2 ADDED	3-8-49	CEK
A	END REV. & 1/4 DIM. ADDED	11-12-45	L.R.

MODEL	PER PLANE	NEXT ASSEMBLY	SUPERSEDES	SUP. BY
V3		0050		

PIPER AIRCRAFT CORP.
LOCK HAVEN, PENNA.

PART NO.	No. REQ.	SIZE	MATERIAL
		.032×1 1/32" NOTED	3S-1/2H ALUM.

SCALE FULL SIZE — TOTAL WT.—LBS.
FINISH—PIPER SPECIFICATION #10
MANUFACTURING PRACTICES—PIPER SPECIFICATION #9

TRIMSTRIP

DRAFTSMAN	CHECKER	STANDARDS
L.R. 9-4-45	R.E.T. 9-25-45	

10049

402

A402

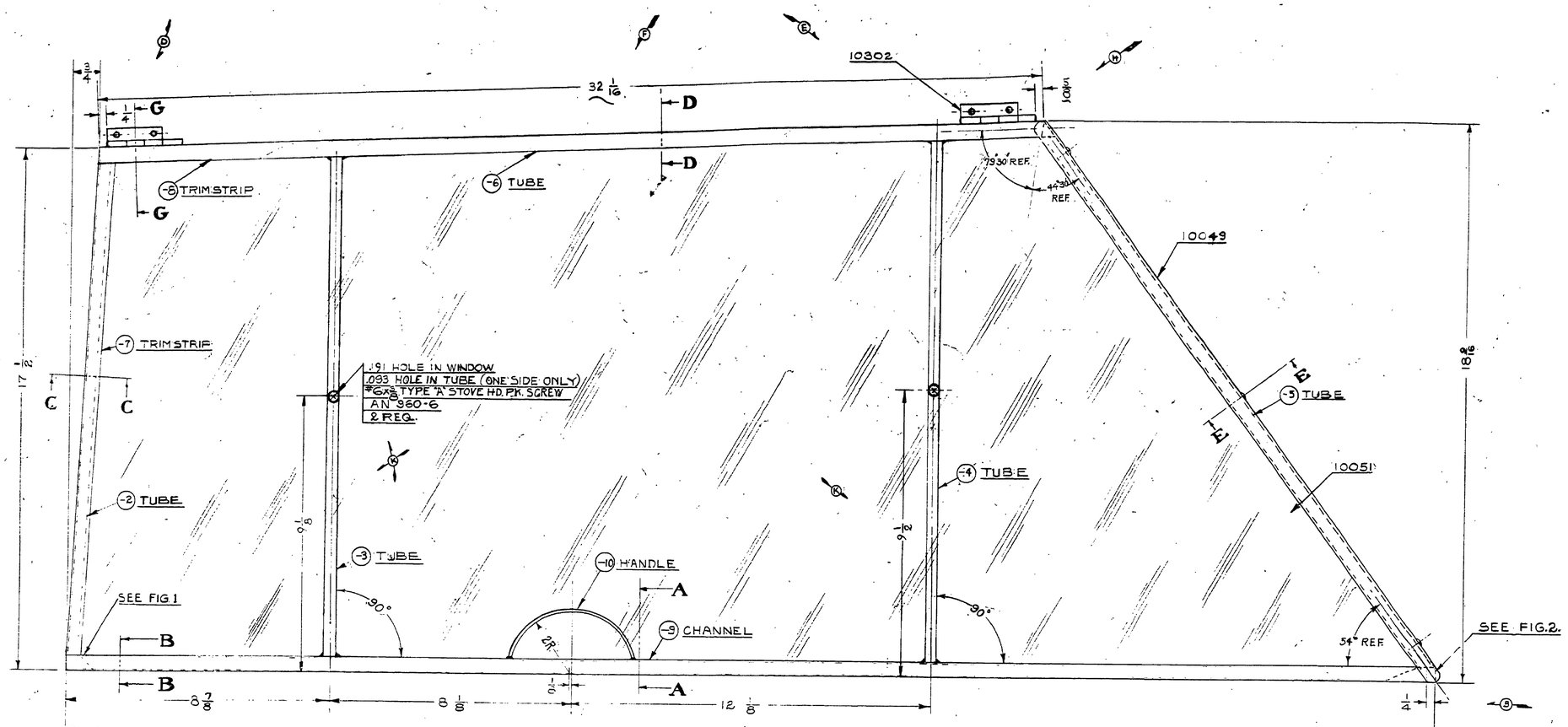

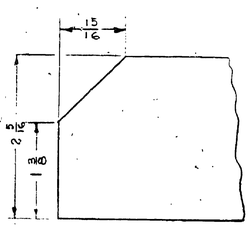

FIG. 1.
FULL SIZE
CHANNEL END DETAIL
(FLAT PATTERN)

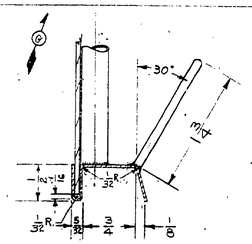

SECTION A-A
FULL SIZE

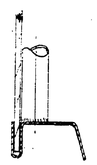

SECTION B-B
FULL SIZE

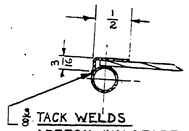

SECTION C-C
FULL SIZE

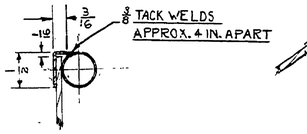

SECTION D-D
FULL SIZE

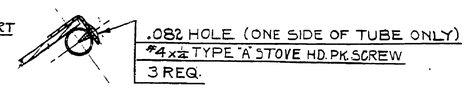

SECTION E-E
FULL SIZE

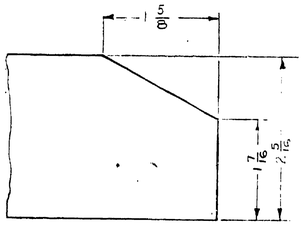

FIG. 2.
FULL SIZE
CHANNEL END DETAIL
(FLAT PATTERN)

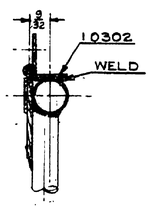

SECTION G-G
FULL SIZE

AN960-6	2	WASHER	
#6	2	3/8L.	TYPE A STOVE HD. PK. SCREW
#4	3	1/4L.	
10302	2	HINGE ASSEMBLY	
10051	1	WINDOW	
10049	1	TRIMSTRIP	
-10	1	1/8 x 5 1/16	1010 C.R. STEEL WIRE
-9	1	.032 x 2 5/16 x 4 1/4	#1025 SHEET STEEL
-8	1	.032 x 7/8 x 32 1/4	
-7	1	.032 x 5/8 x 16 3/16	
-6	1	1/2 x .028 x 32 1/16	#1025 STEEL TUBE
-5	1	5/8 x .028 x 22 1/2	
-4	1	3/8 x .028 x 17 1/2	
-3	1	3/8 x .028 x 16 3/16	
-2	1	3/8 x .028 x 18 9/16	
PART NO.	QTY. REQ.	SIZE	DESCRIPTION / MATERIAL

SCALE C/N, LIFT & NOTED — TOTAL WT.—LBS.
FINISH—PIPER SPECIFICATION #10
MANUFACTURING PRACTICES—PIPER SPECIFICATION #8

K	.191 HOLE, 9 1/8 DIM. & QTY. ADDED; 2 REQ. WAS 6 REQ.	6-24-47	RC
J	CALLNOTE ADDED TO SEC. D-D	5-30-46	HMZ
H	32 1/16 WAS 31 15/16 & 5/8 WAS 9/16	1-28-46	HMZ
G	WELD VIEWS REVISED	1-22-46	HMZ
F	46 1/16 WAS 45 15/16, 32 1/16 WAS 31 15/16	12-12-45	DB
E	10302 WAS 10064	12-11-45	DB
D	NUTS, BOLTS, & WASHERS G-G ADDED	12-10-45	DB
C	2.50 / 10.11 & FIG. 2 REVISED	10-12-45	DB
B	SHT. 2 REVISED, 1/4 DIM. ADDED	10-10-45	DB
A	DRILLED SHEETS WERE, & CSK. NO RIVETS	10-5-45	C.L.N.
LET.	REVISION	DATE	BY

THIS DRAWING IS THE PROPERTY OF THE PIPER AIRCRAFT CORP. AND ITS POSSESSION BY UNAUTHORIZED PERSONS SHALL NOT BE CONSTRUED AS PERMISSION TO REPRODUCE FOR SALE, IN WHOLE OR IN PART, ANY DEVICES SHOWN THEREON.

MODEL	PER PLANE	NEXT ASSEMBLY	SUPERSEDES	SUP. BY

PIPER AIRCRAFT CORP.
LOCK HAVEN, PENNA.

DRAFTSMAN: L.R.S. 3-21-45 — CHECKER: G.E.T. 9-24-45 — STANDARDS:

DOOR ASSEMBLY — ENCLOSURE UPPER

10050

A830

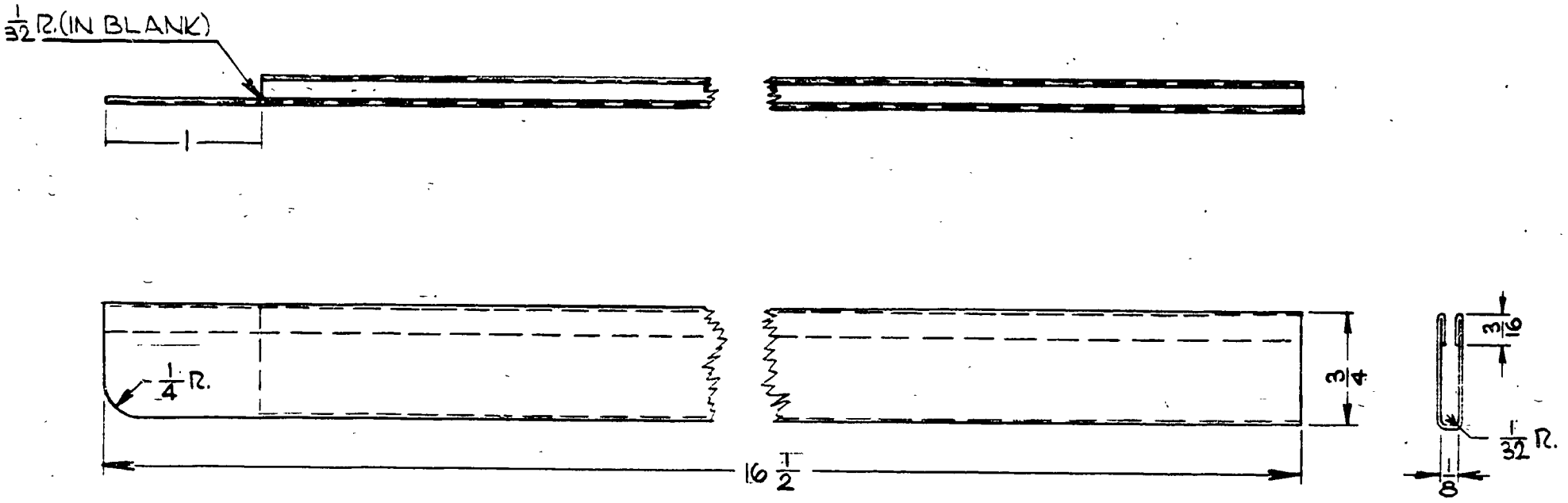

THIS DRAWING IS THE PROPERTY OF THE PIPER AIRCRAFT CORP. AND ITS POSSESSION BY UNAUTHORIZED PERSONS SHALL NOT BE CONSTRUED AS PERMISSION TO REPRODUCE FOR SALE, IN WHOLE OR IN PART, ANY DEVICES SHOWN THEREON.

LET.	REVISION	DATE	BY

MODEL	PER PLANE	NEXT ASSEMBLY	SUPERSEDES	SUP. BY
J3	1	24096		

PART No.	No. REQ.	SIZE	DESCRIPTION
		.020 x 2 1/16 x 16 1/2	HR STEEL
		MATERIAL	

SCALE FULL SIZE — TOTAL WT.—LBS.

FINISH—PIPER SPECIFICATION #10

MANUFACTURING PRACTICES—PIPER SPECIFICATION #9

CHANNEL - WINDOW

PIPER AIRCRAFT CORP.
LOCK HAVEN, PENNA.

DRAFTSMAN	CHECKER	STANDARDS
L.R. 8-31-45	E.E.T. 9-21-45	

10061

PENCILTEX A. & B. SMITH CO., PGH., PA.

A 6

REDRAWN ORIGINAL DATED 9-30-40

PART NO.	MODEL	PER PLANE	NEXT ASS'Y	REMARKS
10062	L-14	6	90414, 90412	
	J-4	6	16012, 16052, 11693	
	J5D	6	14222	
	J5C	4	14222	
	J3	2	14222	
10062-2	J3	4	14222	SEE NOTE 1

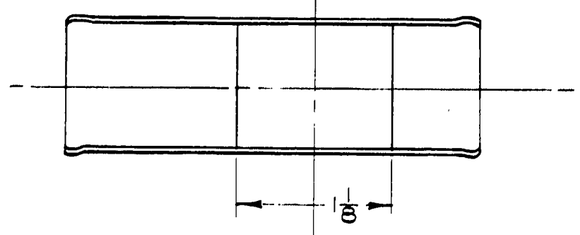

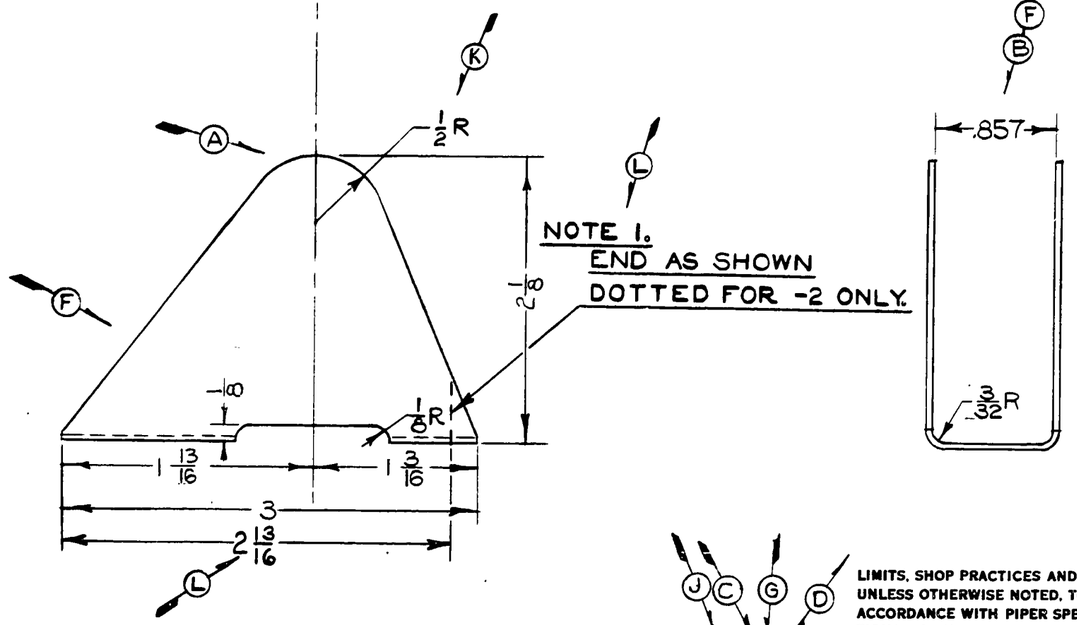

J C G D

LIMITS, SHOP PRACTICES AND FINISH, UNLESS OTHERWISE NOTED, TO BE IN ACCORDANCE WITH PIPER SPECIFICATIONS #9 AND #10.

LET	REVISION	DATE	BY
K	5/16 & 3/16 DIM. REM; 1/2 R ADDED	2-14-46	C.E.V.
J	L-14 MODEL REF. ADDED	3-14-45	E.L.N.
H	REDRAWN WITHOUT CHANGE	11-30-44	E.L.N.
G	J3 MODEL REF. ADDED	10-29-43	R.E.T.
F	DIM'S REVISED	8-10-43	W.G.T.
E	BLANK OUTLINE REMOVED	8-10-43	W.G.T.
D	NOTE ADDED	2-16-43	R.R.S.
C	J5C, J5D ADDED	2-16-43	H.R.K.
B	21/32 WAS 7/8	5-27-41	W.N.E.
A	1/2 RADIUS REMOVED	4-10-41	V.F.

LET	REVISION	DATE	BY
N	4 REQ OF 10062 FOR J5C WAS 6 REQ	3-18-46	C.E.V.
M	-2 PART NO. ADDED	3-18-46	C.E.V.
L	2 1/8 DIM, NOTE 1 & TABLE ADDED	3-18-46	C.E.V.

MODEL	PER SHIP	NEXT ASSEMBLY	SUPERSEDES	SUP. BY
NOTED	NOTED	NOTED		

PIPER AIRCRAFT CORP.
LOCK HAVEN, PENNA.

R.H.	L.H.	PART No.	No. REQ.	SIZE	DESCRIPTION / MATERIAL
				.040×3×5 1/8	52S-1/2 H. ALUM.

SCALE FULL SIZE — TOTAL WT. - LBS.
FINISH

FOOT – REAR DRAG STRUT

V. F.	J.B.		
4-4-41	4-7-41		
DRAWN	CHECKED	APPROVED	

10062

FOR METAL SPAR WING

A403

A403

REDRAWN ORIGINAL DATED 9-30-40

K E

B

CUT AS SHOWN DOTTED FOR 10072-2 ONLY (SEE TABLE)

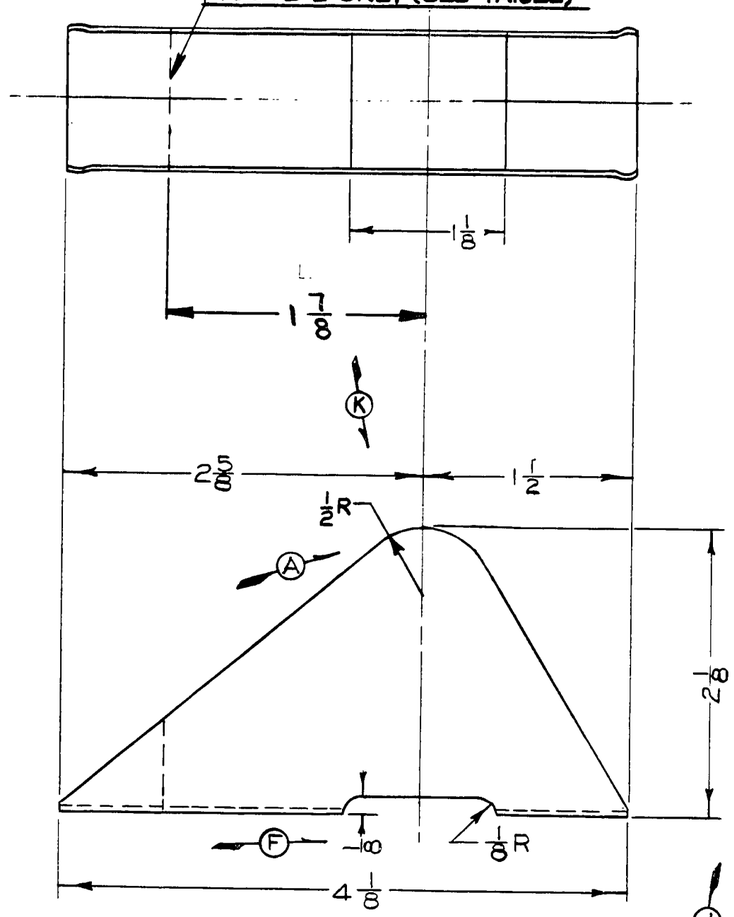

PART NO	REMARKS
10072	AS SHOWN
10072-2	CUT AS SHOWN DOTTED

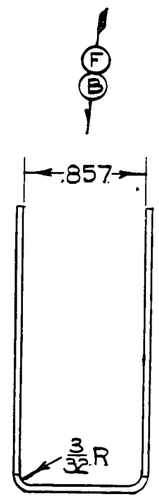

NOTE: PART 10092 MAY BE MADE FROM THIS PART.

J G D

LIMITS, SHOP PRACTICES AND FINISH. UNLESS OTHERWISE NOTED, TO BE IN ACCORDANCE WITH PIPER SPECIFICATIONS #9 AND #10.

LET	REVISION	DATE	BY
M	-2 ADDED	11-10-47	R.C.
L	J3 NO. PER SHIP & AS6	5-9-46	L.R.
K	1/4, 3 7/16 DIM. REM.; 1/2 R ADDED	2-14-46	C.E.V.
J	L-14 MODEL REF. ADDED	3-14-45	E.L.M.
H	REDRAWN WITHOUT CHANGE	12-2-44	E.L.M.
G	J3 MODEL REF. ADDED	10-29-43	R.E.T.
F	DIM'S REVISED	8-10-43	W.G.T.
E	BLANK OUTLINE REMOVED	8-10-43	W.G.T.
D	NOTE ADDED	2-16-43	R.R.E.
C	J5C, J5D ADDED	2-16-43	H.R.K.
B	3/32 WAS 1/8	5-27-41	W.N.E.
A	1/2 RADIUS REMOVED	4-10-41	V.F.

MODEL	PER SHIP	NEXT ASSEMBLY	SUPERSEDES	SUP. BY
L-14	6	30414, 30412		
J3	6	14238, 14232		
J5D	6	14282		
J5C	6	14222		
		11593		
J4	6	10042, 10052		

PIPER AIRCRAFT CORP.
LOCK HAVEN, PENNA.

R.H.	L.H.	No. REQ.	SIZE	DESCRIPTION
PART No.			MATERIAL	
			.040 × 4 1/8 × 5 1/8	52S-1/2 H. ALUM.

SCALE FULL SIZE — TOTAL WT. - LBS.

FINISH

FOOT — FRONT DRAG STRUT

V. F.	J.B.		10072
4-8-41	4-8-41		
DRAWN	CHECKED	APPROVED	

FOR METAL SPAR WING

404

A404

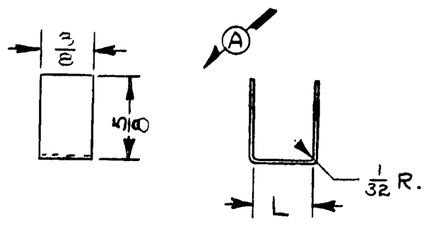

C

PART NO.	L	MODEL	PER PLANE	NEXT ASS'Y.
10081-2	1/2	J5C	4	24066
10081-3	7/8	J5C	4	24066

B

THIS DRAWING IS THE PROPERTY OF THE PIPER AIRCRAFT CORP. AND ITS POSSESSION BY UNAUTHORIZED PERSONS SHALL NOT BE CONSTRUED AS PERMISSION TO REPRODUCE FOR SALE, IN WHOLE OR IN PART, ANY DEVICES SHOWN THEREON

LET.	REVISION	DATE	BY
C	1/2 L. WAS 7/16 ON-2	2-12-51	I.M.M.
B	.032 WAS .020, 1025 STL. WAS HR. STL.	1-28-46	D.A.W.
A	5/8 WAS 1/2	1-9-45	D.A.W.

MODEL	PER PLANE	NEXT ASSEMBLY	SUPERSEDES	SUP. BY
NOTED	NOTED	NOTED		

PIPER AIRCRAFT CORP.
LOCK HAVEN, PENNA.

PART No.	No. REQ.	SIZE	DESCRIPTION / MATERIAL
		.032 X 3/8 X NOTED	#1025 STEEL

SCALE — TOTAL WT.—LBS.

FINISH—PIPER SPECIFICATION #10

MANUFACTURING PRACTICES—PIPER SPECIFICATION #9

CLIP

DRAFTSMAN	CHECKER	STANDARDS
H.M.Z. 9-27-45	R.E.T. 9-28-45	

10081

405

A405

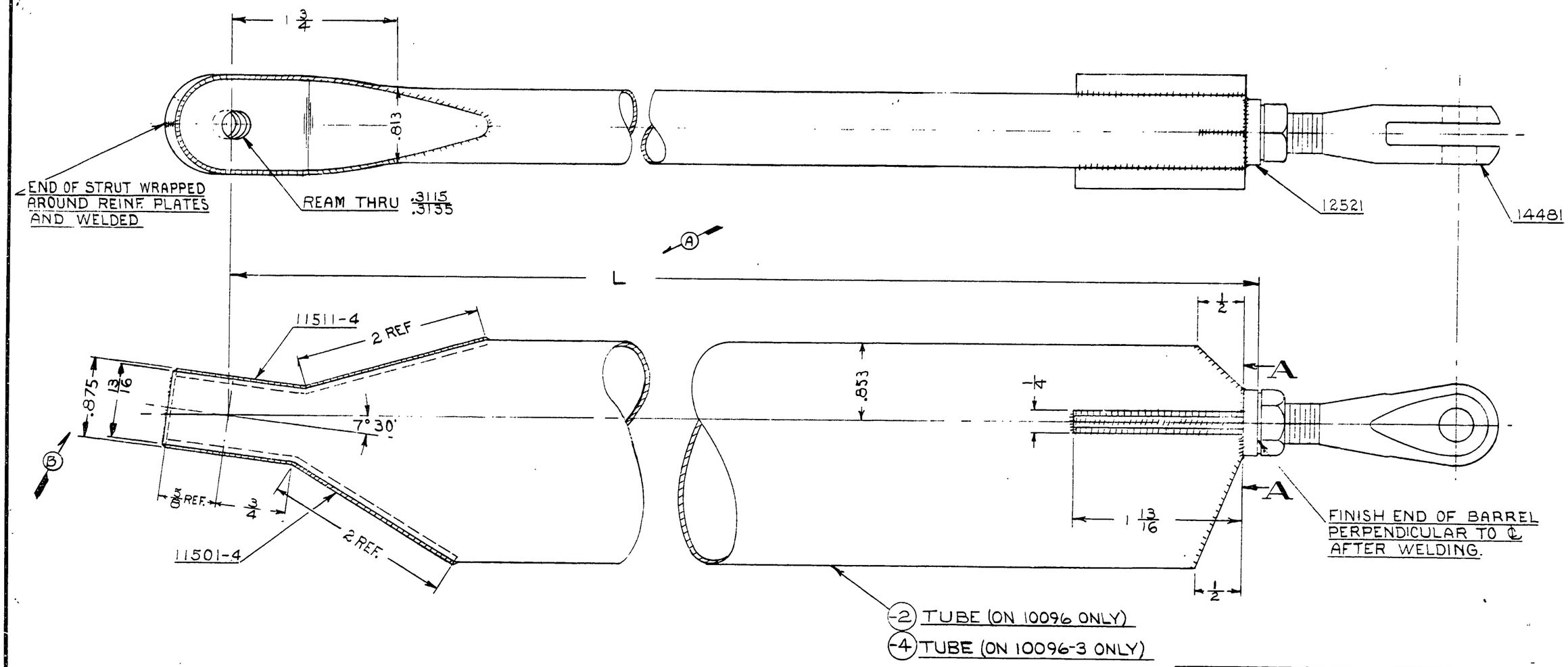

ASS'Y NO.	L
10096	121 7/16
10096-3	121 3/4

SECTION A-A

LET.	REVISION	DATE	BY
C	-3,-4, TABLE ADDED	2-9-49	JCB
B	.875 WAS 7/8	10-16-46	C.E.K.
A	121 7/16 DIM. WAS 121 1/16 IN 5/16 122 3/16 WAS 122	10-24-45	M.G.S.

THIS DRAWING IS THE PROPERTY OF THE PIPER AIRCRAFT CORP. AND ITS POSSESSION BY UNAUTHORIZED PERSONS SHALL NOT BE CONSTRUED AS PERMISSION TO REPRODUCE FOR SALE, IN WHOLE OR IN PART, ANY DEVICES SHOWN THEREON

MODEL	PER PLANE	NEXT ASSEMBLY	SUPERSEDES	SUP. BY
J5C	2	10127	11341	

PIPER AIRCRAFT CORP.
LOCK HAVEN, PENNA.

PART No.	NO. REQ.	SIZE	DESCRIPTION / MATERIAL
10097	DWG REF ONLY		REAR LIFT STRUT SECTION
14481	1		FORK ASSEMBLY
12521	1		BARREL ASSEMBLY
11511-4	1		REINFORCEMENT PLATE
11501-4	1		REINFORCEMENT PLATE
-4	1	122 11/16 L	PIPER SECTION 10097
-2		122 3/8 L	

SCALE FULL SIZE — TOTAL WT.—LBS.

FINISH—PIPER SPECIFICATION #10

MANUFACTURING PRACTICES—PIPER SPECIFICATION #9

STRUT ASSEMBLY—
REAR LIFT

DRAFTSMAN	CHECKER	STANDARDS	
M.G.S. 10-1-45	L.E.K. 10-2-45		10096

406

A406

LAYOUT J5C 10023

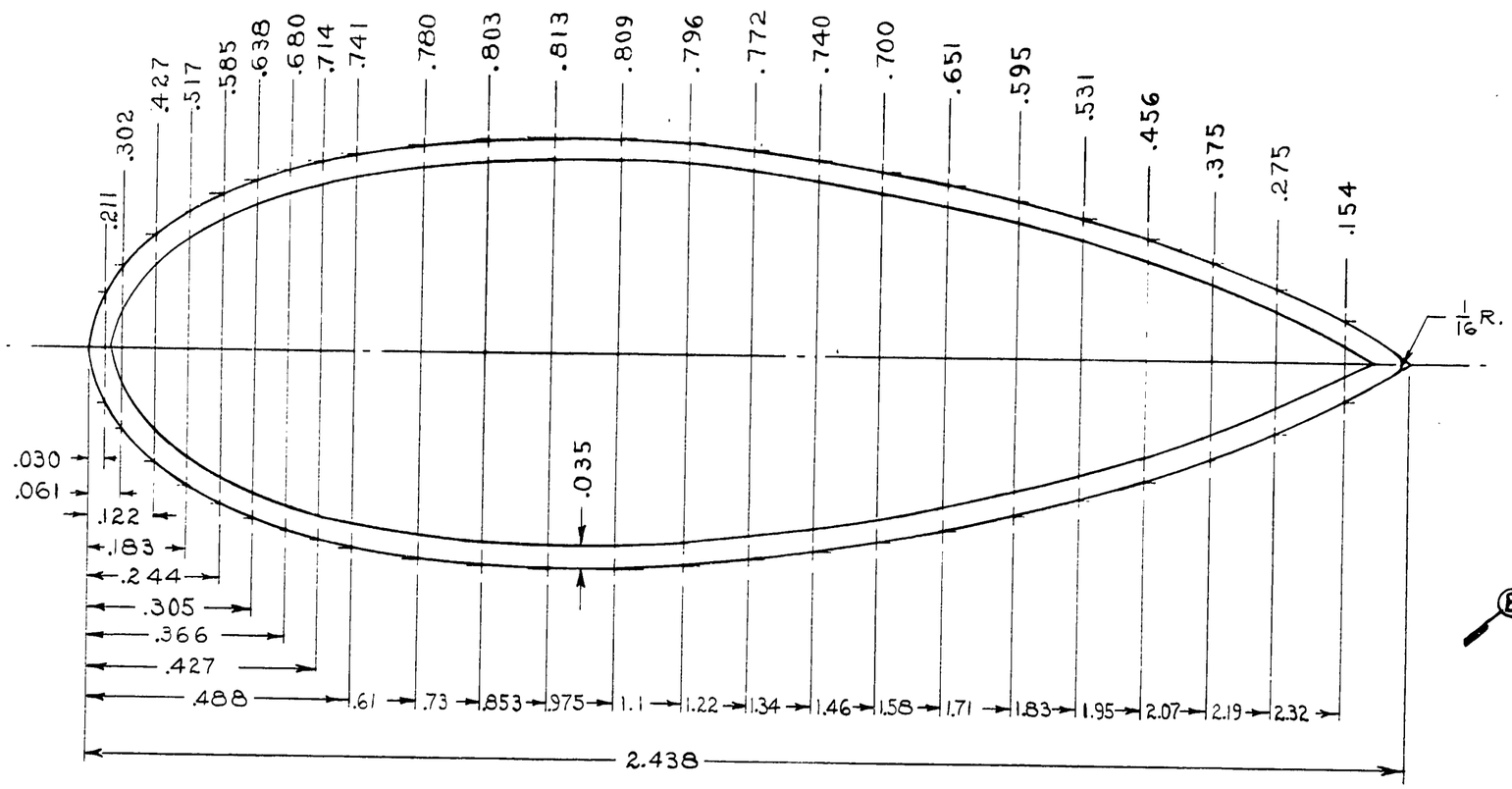

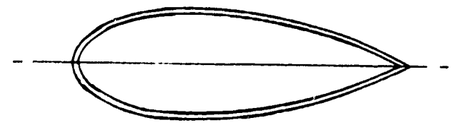

ACTUAL SIZE

MATERIAL .035 #1010 C.R. STEEL.
WEIGHT PER LINEAR FOOT: .606 LBS
MIN. U.T.S. 45,000 P.S.I.

LET.	REVISION	DATE	BY
B	NOTE ADDED	4-1-46	DAM
A	1/16 R. WAS 1/32 MAX. RADIUS	11-28-45	DB

THIS DRAWING IS THE PROPERTY OF THE PIPER AIRCRAFT CORP. AND ITS POSSESSION BY UNAUTHORIZED PERSONS SHALL NOT BE CONSTRUED AS PERMISSION TO REPRODUCE FOR SALE, IN WHOLE OR IN PART, ANY DEVICES SHOWN THEREON

MODEL	PER PLANE	NEXT ASSEMBLY	SUPERSEDES	SUP. BY

PIPER AIRCRAFT CORP.
LOCK HAVEN, PENNA.

PART No.	No. REQ.	MATERIAL

SCALE 4 x SIZE & NOTED — TOTAL WT.—LBS.
FINISH—PIPER SPECIFICATION #10
MANUFACTURING PRACTICES—PIPER SPECIFICATION #9

SECTION—REAR LIFT STRUT

DRAFTSMAN	CHECKER	STANDARDS
M.G.S. 9-27-45	L.E.K. 10-2-45	

10097

407

A407

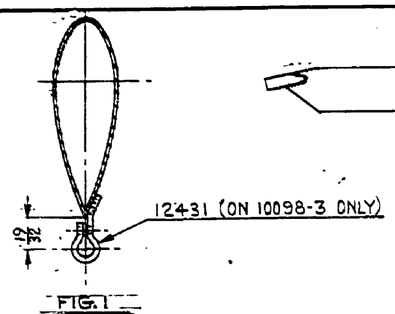

FIG. 1

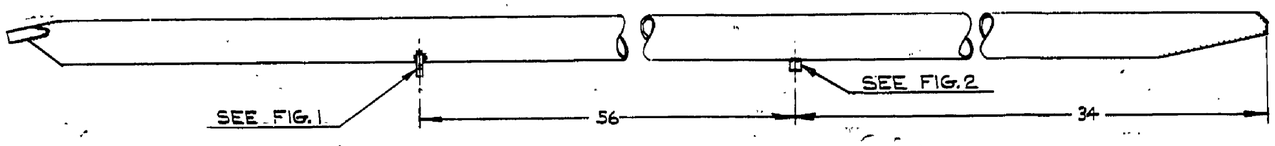

FITTINGS INSTALLATION DETAIL
1 1/2 IN. = 1 FT.
(ON 10098-3 ONLY)

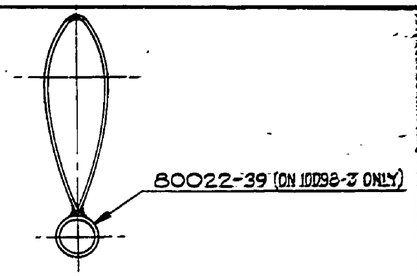

FIG. 2

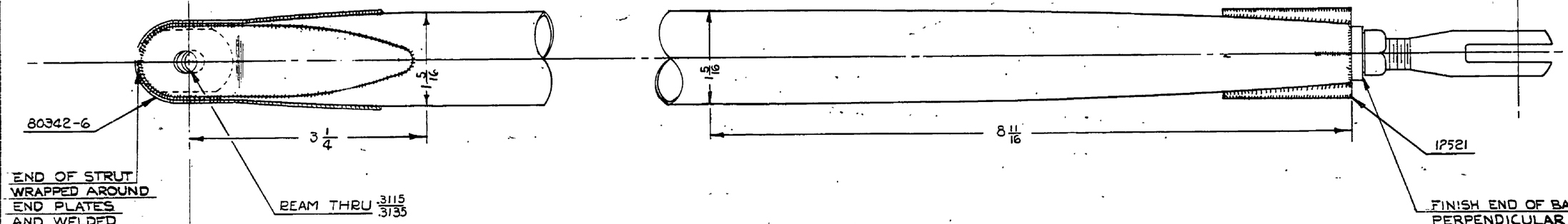

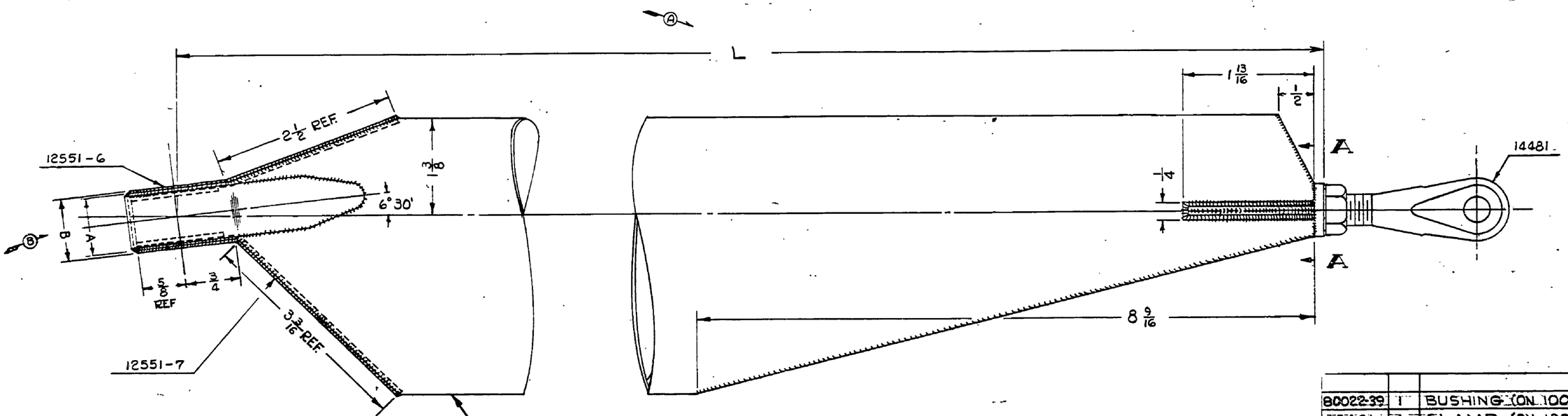

(-2) TUBE (ON 10098 ONLY)
(-4) TUBE (ON 10098-3 ONLY)

ASSY NO.	L	A	B
10098	120 3/4	13/16	.875
10098-3	121 1/8	3/4	13/16

SECTION A-A

PART NO.	NO. REQ.	DESCRIPTION
80022-39	1	BUSHING (ON 10098-3 ONLY)
12431	1	CLAMP (ON 10098-3 ONLY)
80342-6	1	REINFORCEMENT STRAP
14481	1	FORK ASSEMBLY
12551-7	1	END PLATE ASSEMBLY
12521	1	BARREL ASSEMBLY
12551-6	1	END PLATE ASSEMBLY
10099	DWG. SECT. REV.	FRONT LIFT STRUT SECTION
-4	1	121 1/8 PIPER SECTION 10099
-2	1	120 3/4

SIZE | MATERIAL

SCALE FULL SIZE | TOTAL WT.—LBS.

FINISH—PIPER SPECIFICATION #10

MANUFACTURING PRACTICES—PIPER SPECIFICATION #8

THIS DRAWING IS THE PROPERTY OF THE PIPER AIRCRAFT CORP. AND ITS POSSESSION BY UNAUTHORIZED PERSONS SHALL NOT BE CONSTRUED AS PERMISSION TO REPRODUCE FOR SALE, IN WHOLE OR IN PART, ANY DEVICES SHOWN THEREON.

LET.	REVISION	DATE	BY
D	3/4 WAS 15/16, 1 5/16 WAS .875 ON -3	2-24-50	C.K.
C	-3, -4, TABLE ADDED	2-11-49	I.C.B.
B	.875 WAS 7/8	10-15-46	C.E.W.
A	120 3/4 DIM. RELOCATED	10-24-45	M.G.S.

MODEL	PER PLANE	NEXT ASSEMBLY	SUPERSEDES	SUP. BY
8	10127		12542	

PIPER AIRCRAFT CORP.
LOCK HAVEN, PENNA.

STRUT ASSEMBLY—
FRONT LIFT

DRAFTSMAN	CHECKER	STANDARDS
L.E.K. 10-1-45	M.G.S. 10-2-45	

10098

696

A696

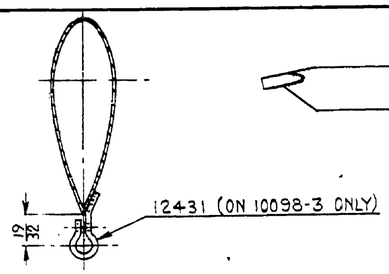

FIG. 1

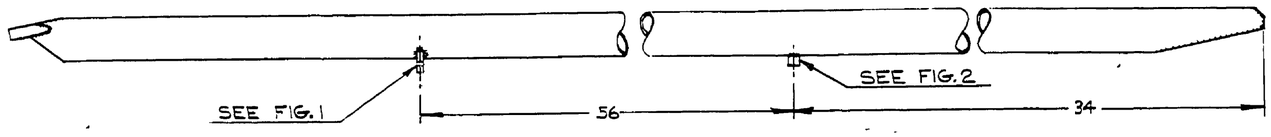

FITTINGS INSTALLATION DETAIL
1½ IN. = 1 FT.
(ON 10098-3 ONLY)

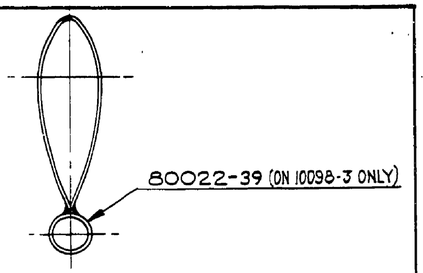

FIG. 2

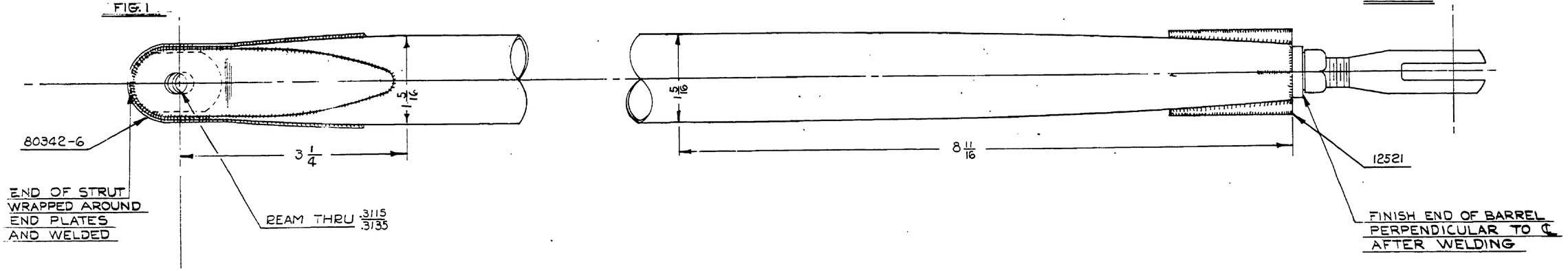

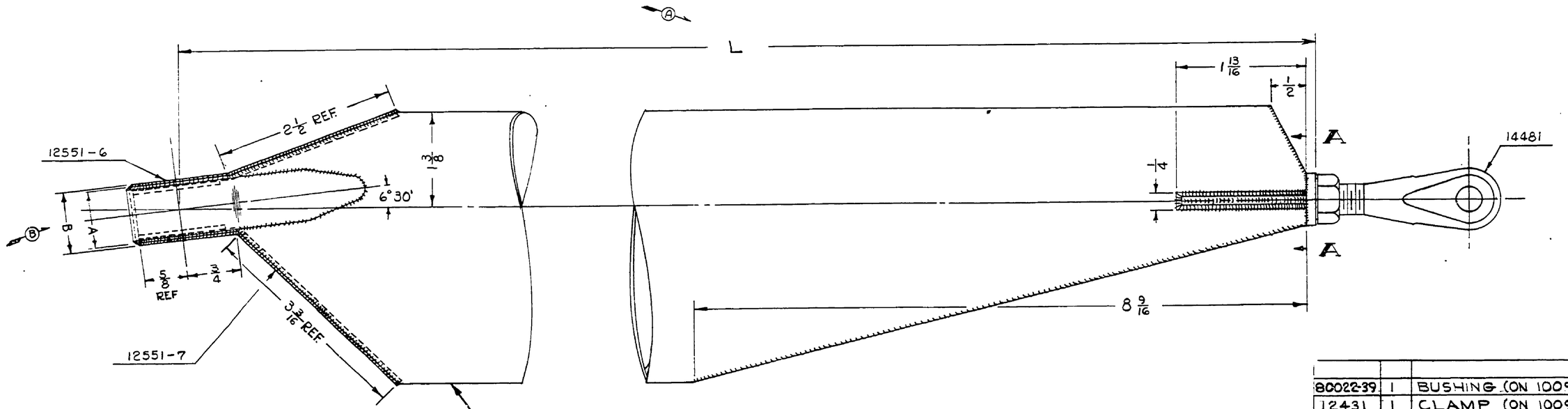

-2 TUBE (ON 10098 ONLY)
-4 TUBE (ON 10098-3 ONLY)

ASSY NO.	L	A	B
10098	120 3/4	13/16	.875
10098-3	121 1/8	3/4	13/16

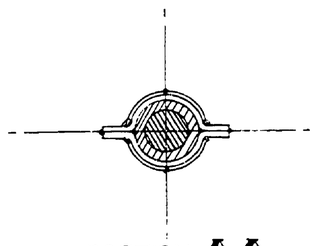

SECTION A-A

80022-39	1	BUSHING (ON 10098-3 ONLY)
12431	1	CLAMP (ON 10098-3 ONLY)
80342-6	1	REINFORCEMENT STRAP
14481	1	FORK ASSEMBLY
12551-7	1	END PLATE ASSEMBLY
12521	1	BARREL ASSEMBLY
12551-6	1	END PLATE ASSEMBLY
10099	DWG. REF. ONLY	FRONT LIFT STRUT SECTION
-4	1	122 7/8 / 121 3/4 PIPER SECTION 10099
-2		
PART NO.	NO. REQ.	SIZE / DESCRIPTION
		MATERIAL

SCALE FULL SIZE — TOTAL WT. - LBS.

FINISH—PIPER SPECIFICATION #10

MANUFACTURING PRACTICES—PIPER SPECIFICATION #9

THIS DRAWING IS THE PROPERTY OF THE PIPER AIRCRAFT CORP. AND ITS POSSESSION BY UNAUTHORIZED PERSONS SHALL NOT BE CONSTRUED AS PERMISSION TO REPRODUCE FOR SALE, IN WHOLE OR IN PART, ANY DEVICES SHOWN THEREON.

LET.	REVISION	DATE	BY
D	3/8 WAS 1 5/16, 1 7/16 WAS .875 ON -3	2-24-50	C.K.
C	-3, -4, TABLE ADDED	2-11-49	J.C.B.
B	.875 WAS 7/8	10-16-46	C.E.K.
A	120 3/4 DIM. RELOCATED	10-24-45	M.G.S.

MODEL	PER PLANE	NEXT ASSEMBLY	SUPERSEDES	SUP. BY
J5C	2	10127	12542	

PIPER AIRCRAFT CORP.
LOCK HAVEN, PENNA.

STRUT ASSEMBLY — FRONT LIFT

DRAFTSMAN	CHECKER	STANDARDS
L.E.K. 10-1-45	M.G.S. 10-2-45	

10098

A696

A696

LAYOUT J5C 10021

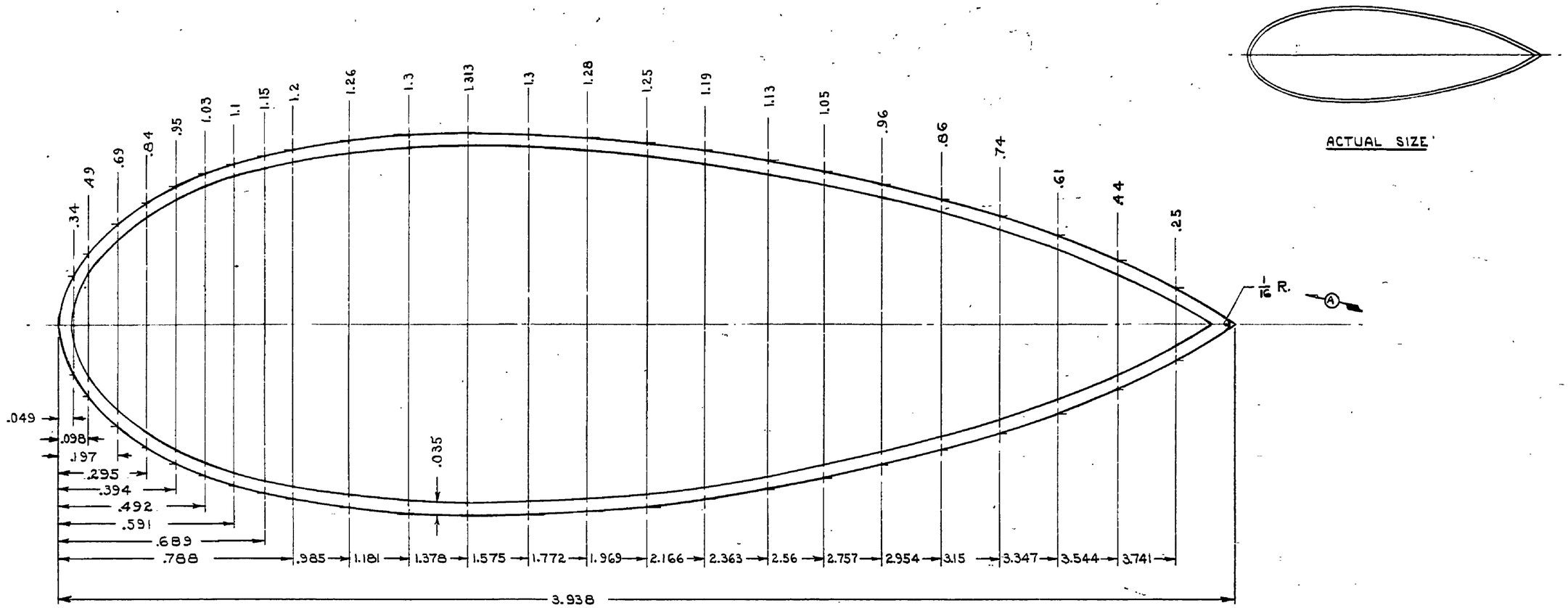

MATERIAL: .035 *1010 C.R. STEEL
WEIGHT PER LINEAR FOOT 1.356
MIN. U.T.S. 45,000 P.S.I.

B

LET.	REVISION	DATE	BY
B	NOTE ADDED	4-1-46	D.A.W.
A	1/16 R. WAS 1/32 R. MAX. RADIUS	10-28-45	DB

THIS DRAWING IS THE PROPERTY OF THE PIPER AIRCRAFT CORP. AND ITS POSSESSION BY UNAUTHORIZED PERSONS SHALL NOT BE CONSTRUED AS PERMISSION TO REPRODUCE FOR SALE, IN WHOLE OR IN PART, ANY DEVICES SHOWN THEREON.

MODEL	PER PLANE	NEXT ASSEMBLY	SUPERSEDES	SUP. BY

PIPER AIRCRAFT CORP.
LOCK HAVEN, PENNA.

PART NO.	NO. REQ.	MATERIAL
SCALE 4 X SIZE & NOTED		TOTAL WT.—LBS.

FINISH—PIPER SPECIFICATION #10
MANUFACTURING PRACTICES—PIPER SPECIFICATION #9

SECTION-FRONT LIFT STRUT

DRAFTSMAN	CHECKER	STANDARDS
M.G.S. 5-27-45	L.E.K. 10-2-45	

10099

A697

LAYOUT J5C 10021

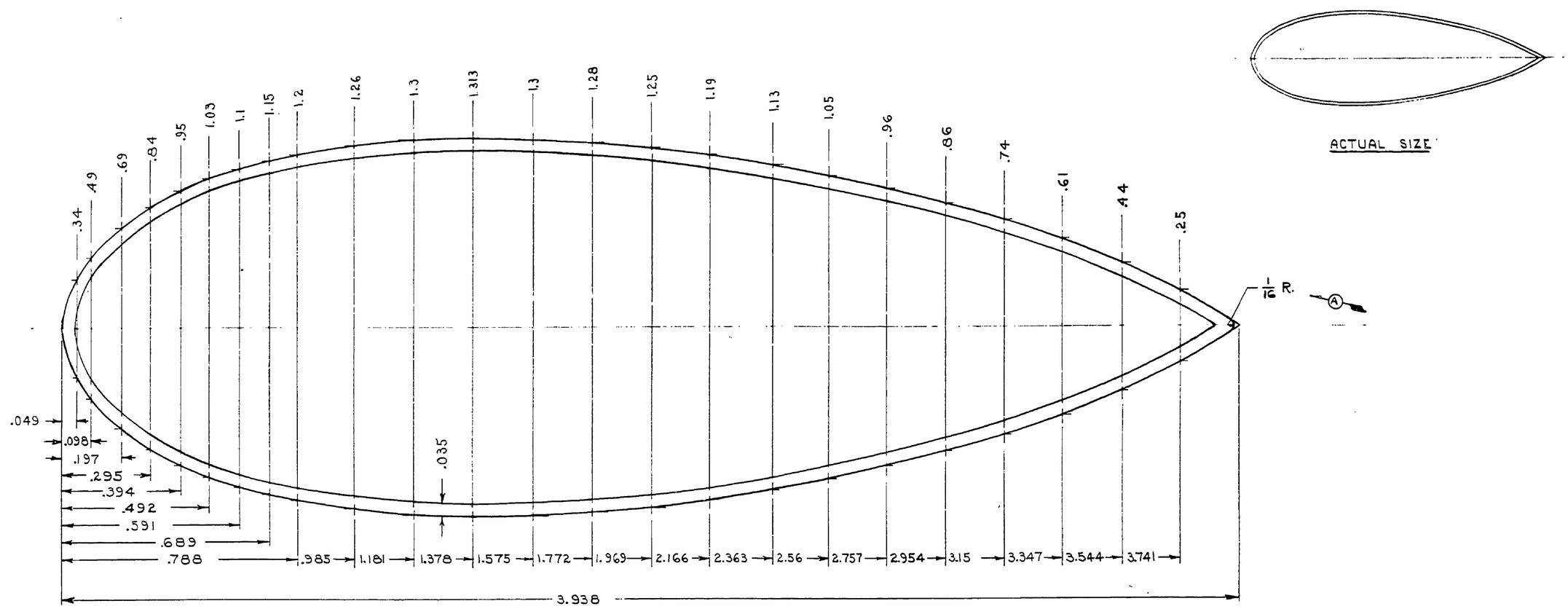

ACTUAL SIZE

MATERIAL: .035 #1010 C.R. STEEL
WEIGHT PER LINEAR FOOT 1.356
B MIN. U.T.S. 45,000 P.S.I.

THIS DRAWING IS THE PROPERTY OF THE PIPER AIRCRAFT CORP. AND ITS POSSESSION BY UNAUTHORIZED PERSONS SHALL NOT BE CONSTRUED AS PERMISSION TO REPRODUCE FOR SALE, IN WHOLE OR IN PART. ANY DEVICES SHOWN THEREON.

LET.	REVISION	DATE	BY
B	NOTE ADDED	4-1-46	DAW
A	1/16 R. WAS 1/32 MAX. RADIUS	10-28-45	DDB

MODEL	PER PLANE	NEXT ASSEMBLY	SUPERSEDES	SUP. BY

PIPER AIRCRAFT CORP.
LOCK HAVEN, PENNA.

PART NO.	No. REQ.	MATERIAL
SCALE 4 X SIZE & NOTED		TOTAL WT.—LBS.

FINISH—PIPER SPECIFICATION #10
MANUFACTURING PRACTICES—PIPER SPECIFICATION #9

SECTION-FRONT LIFT STRUT

M.G.S.	L.E.K.		
S-27-45	10-2-45		10099
DRAFTSMAN	CHECKER	STANDARDS	

677

A697

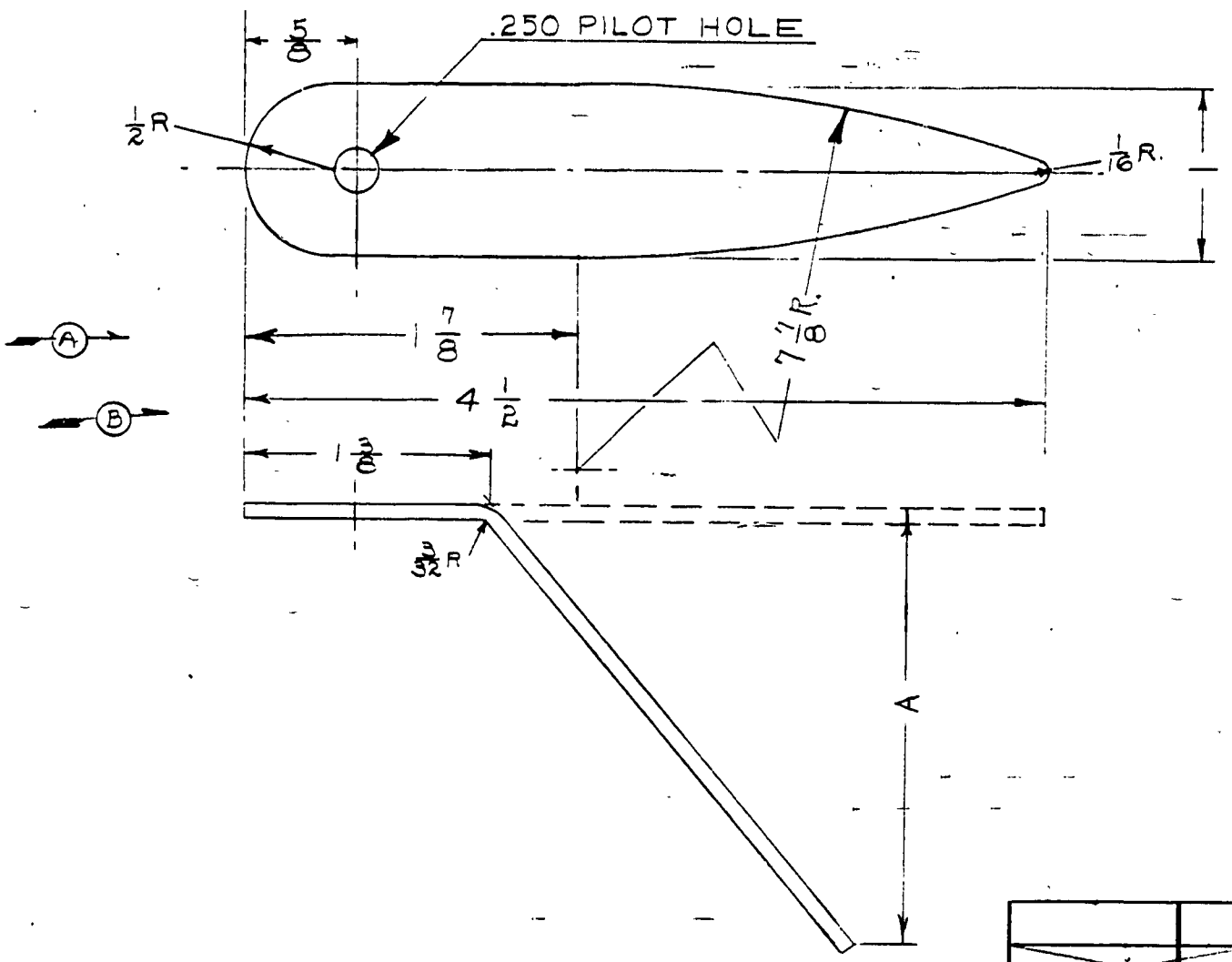

PART NO.	A
10100	2 1/2
10100-2	2 1/8
10100-3	1 15/16
10100-4	1

LET.	REVISION	DATE	BY
D	-3 & -4 ADDED.	11-6-47	H.K.
C	-2 & TABLE ADDED	10-8-46	E.L.N
B	4 1/2 WAS 4 9/16	1-8-46	I.D.B.
A	1 7/8 WAS 2 3/4; 7 1/8 R WAS 3 13/16 R.	7-8-46	I.D.B

THIS DRAWING IS THE PROPERTY OF THE PIPER AIRCRAFT CORP. AND ITS POSSESSION BY UNAUTHORIZED PERSONS SHALL NOT BE CONSTRUED AS PERMISSION TO REPRODUCE FOR SALE, IN WHOLE OR IN PART, ANY DEVICES SHOWN THEREON.

MODEL	PER PLANE	NEXT ASSEMBLY	SUPERSEDES	SUP. BY
J5C	2	12551	11461-3	

PIPER AIRCRAFT CORP.
LOCK HAVEN, PENNA.

PART No.	No. REQ.	SIZE	DESCRIPTION
		.095 x 1 x 4 1/2	** 1025 STEEL

MATERIAL

SCALE FULL SIZE — TOTAL WT.—LBS.

FINISH—PIPER SPECIFICATION #10

MANUFACTURING PRACTICES—PIPER SPECIFICATION #9

PLATE — FRONT LIFT STRUT END

DRAFTSMAN	CHECKER	STANDARDS
M. G. S. 10-1-45	L. E. K. 10-2-45	

10100

PENCILTEX A. G. B. SMITH CO., PGH., PA.

A 7

REDRAWN - ORIGINAL DATED 10/18/40

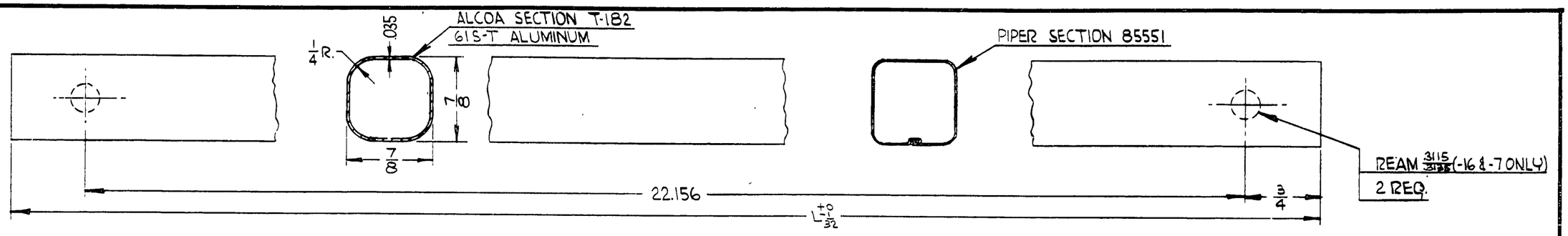

PART NUMBER		L	MODEL	PER PLANE	NEXT ASSEMBLY
USING SEC. T-182	USING PIPER SEC. 85551				
10112-2		29 3/4	J5C J3	2	16462
	10112-8		J5C J3	2	16462
10112-3		29 7/8	J5C J3	2	16478
	10112-9		J5C J3	2	16478
10112-4		30	J5C	2	14852
	10112-10		J5C	2	14852
10112-5		30 11/32	J5C J3	2	14852 14232
	10112-11		J5C J3	2	14852 14232
10112-6		30 13/16	J3	6	14222
			J5C	8	14222 14872 14862
	10112-12		J5C	8	14222 14872 14862
			J3	6	14222
10112-7		23 11/16	J5C	2	10718
			J3	2	15403
	10112-13		J5C	2	14835
	10112-14	30 1/16			
	10112-15	29 11/16			
	10112-16	23 5/8	J3	2	15403
	10112-17	30 1/32			

PART NUMBER		L	MODEL	PER PLANE	NEXT ASSEMBLY
USING SEC. T-182	USING PIPER SEC. 85551				
	10112-18	29 31/32			
	10112-19	29 29/32			
10112-20		23 5/8	J3	2	15403
10112-21		30 1/16			

LET.	REVISION	DATE	BY
AH	10112-21 ADDED	3-14-47	RC
AG	J3 MODEL REF. ADDED FOR -7	9-16-46	I.M.
AF	J3 MODEL REF. CANC. FOR -20	9-16-46	I.M.
AE	J3 CANC. FOR -16, J5C CANC. FOR -10	8-20-46	BC
AD	J3 & J5C CANC. FOR -8 -9 -11 & -12	8-20-46	BC
AC	REDRAWN & REVISED	5-27-46	L.R.

THIS DRAWING IS THE PROPERTY OF THE PIPER AIRCRAFT CORP. AND ITS POSSESSION BY UNAUTHORIZED PERSONS SHALL NOT BE CONSTRUED AS PERMISSION TO REPRODUCE FOR SALE, IN WHOLE OR IN PART, ANY DEVICES SHOWN THEREON.

MODEL	PER PLANE	NEXT ASSEMBLY	SUPERSEDES	SUP. BY
NOTED	NOTED	NOTED		

PIPER AIRCRAFT CORP.
LOCK HAVEN, PENNA.

NOTED

PART No. | No. REQ. | MATERIAL

SCALE FULL SIZE | TOTAL WT.—LBS.

FINISH—PIPER SPECIFICATION #10

MANUFACTURING PRACTICES—PIPER SPECIFICATION #9

TUBES — DRAG STRUT

DRAFTSMAN	CHECKER	STANDARDS
L.R. 5-27-46	R.E.T. 6-19-46	

10112

408

A408

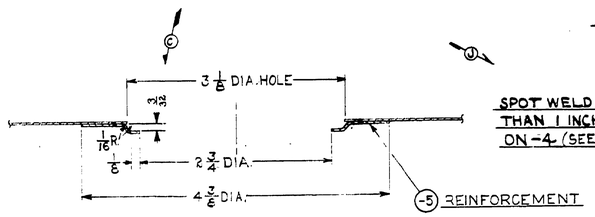

SECTION A-A
FULL SIZE

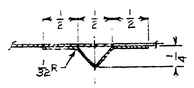

SECTION B-B
FULL SIZE

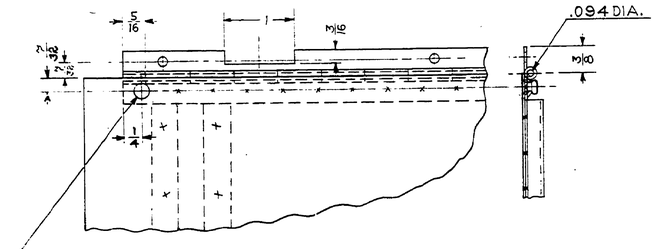

.129 HOLE
DIMPLE 100° x 7/32 DIA.
1/8 x 1/4 L. A17ST ALUM. 100° CSK. HD. RIVET
7 REQ. SPACED 5 13/16 APART

FIG. 1
HINGE INSTALLATION
FULL SIZE

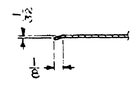

SECTION C-C
FULL SIZE

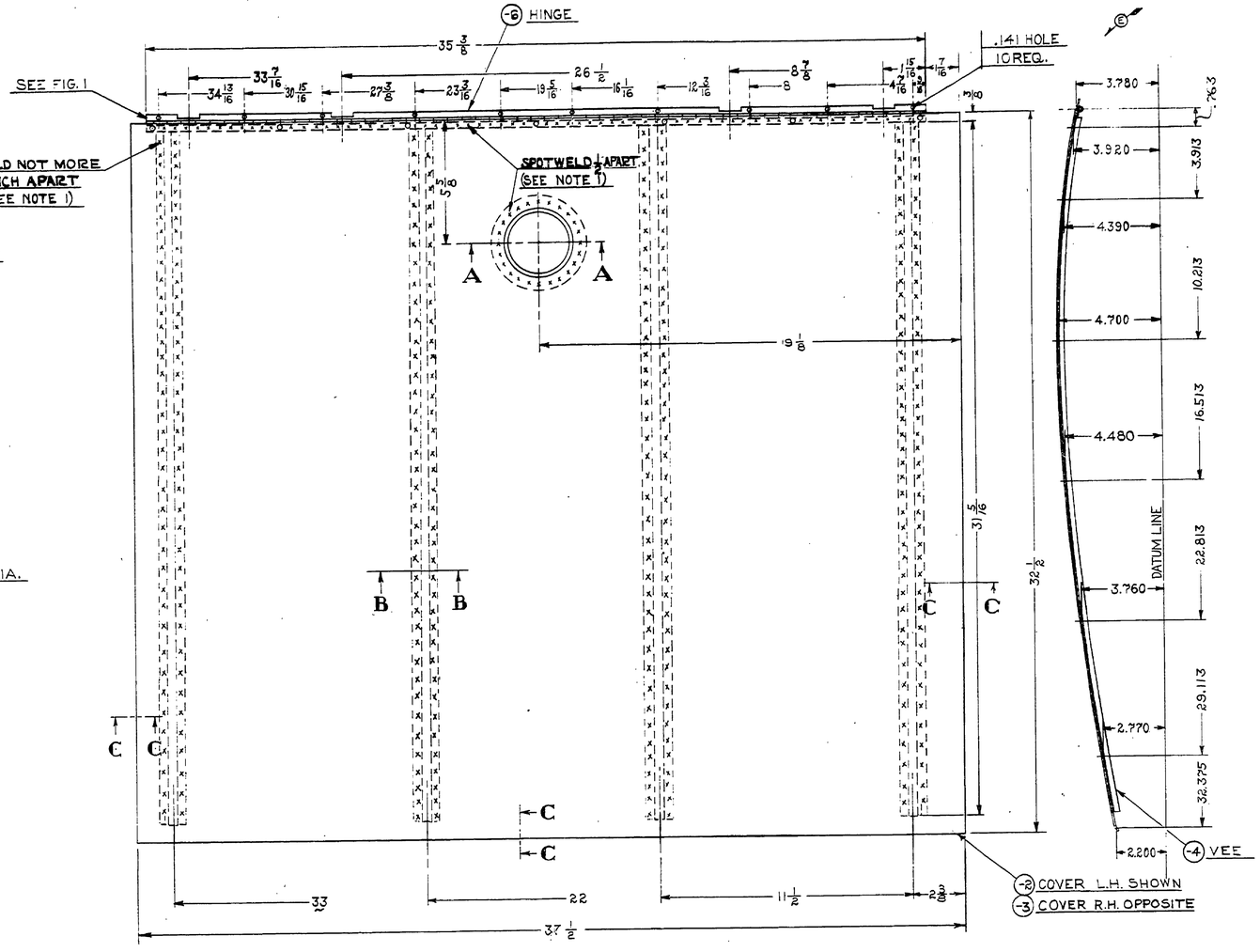

NOTE:
1. SPOTWELDING SHALL BE IN ACCORDANCE WITH PIPER REPORT NO. 400.

10118 L.H. SHOWN
10118-1 R.H. OPPOSITE

K	NOTE 1 ADDED	3-31-48	H.R.K.	
J	SPOT WELDS REV. FOR -4	11-6-47	D.C.	
H	.281 HOLES REM.	11-8-44	R.M.Z.	
G	TO MATCH MATING PART REM.	10-21-46	C.E.K.	
F	FOR -2, -3 & -4 24ST ALCLAD ALUM. WAS 24S-T ALUM.	8-2-46	J.H.	
E	NOTE ADDED TO .141 HOLE REF.	4-30-46	R.M.Z.	
D	ANC-NA 10185 WAS 14746	4-30-46	R.M.Z.	
C	.141 DIM. ADDED	2-14-46	R.M.Z.	
B	DIM. REM.; PIPER SECTION ADDED	11-25-46	H.K.	
A	DWG. REINSTATED	12-3-45	H.K.	
LET	REVISION	DATE	BY	

THIS DRAWING IS THE PROPERTY OF THE PIPER AIRCRAFT CORP. AND ITS POSSESSION BY UNAUTHORIZED PERSONS SHALL NOT BE CONSTRUED AS PERMISSION TO REPRODUCE FOR SALE, IN WHOLE OR IN PART, ANY DEVICES SHOWN THEREON.

MODEL	PER PLANE	NEXT ASSEMBLY	SUPERSEDES	SUP. BY
J3C-65	1	10183		

PIPER AIRCRAFT CORP.
LOCK HAVEN, PENNA.

10204-2	DWG SEC.	HINGE SECTION		
-6	1	35 3/8 LONG	PIPER SECTION 10204-2	
	?	1/8 x 1/4 L.	A17ST ALUM. 100° CSK. HD. RIVET	
-5	1	.032 x 4 3/8 x 4 3/8	3S-1/2 H. ALUM.	
-4	4	.025 x 1 3/4 x 31 5/16	24 ST ALCLAD ALUM.	
-2 -3	1	.025 x 32 3/4 x 37 1/2	24 ST ALCLAD ALUM.	
PART No.	NO. REQ.	SIZE	DESCRIPTION MATERIAL	

SCALE 4 IN. = 1 FT. & NOTED | TOTAL WT.—LBS.
FINISH—PIPER SPECIFICATION #10
MANUFACTURING PRACTICES—PIPER SPECIFICATION #9

COVER ASSEMBLY—
FUEL TANK

DRAFTSMAN	CHECKER	STANDARDS	
H.R.K. 5-27-45	R.T.M. 10-4-45		10118

A831

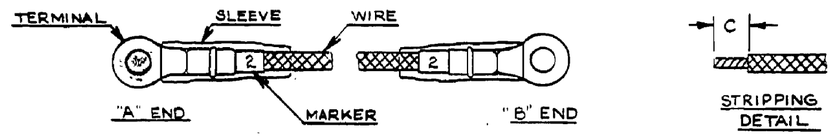

PART NO.	WIRE GA.	WIRE LENGTH	MARKER NO.	"A" END PURCH. PART NO.	"A" END SLEEVE	"A" END C	"B" END PURCH. PART NO.	"B" END SLEEVE	"B" END C
10128-2	10	6 1/2	2	31828	90797-4	5/16	31826	90797-4	5/16
10128-3	10	18 1/2	3	31826	90797-4	5/16	31826	90797-4	5/16
10128-4	10	22	4	31826	90797-4	5/16	31826	90797-4	5/16
10128-5	18	23	5	31270	90797-2	3/16	31096	90797-2	3/16
10128-6	18	140	6	31096	90797-2	3/16	31270	90797-2	3/16
10128-7	18	2 1/2	7	30992	90797-3	3/16	NONE	NONE	1/4
10128-8	18	22	8	NONE	NONE	1/4	31096	90797-2	3/16
10128-9	18	12	9	31096	90797-2	3/16	NONE	NONE	3/16
10128-10	18	12	10	NONE	NONE	3/16	31096	90797-2	3/16
10128-11	18	29	11	31096	90797-2	3/16	NONE	NONE	3/16
10128-12	18	29	12	NONE	NONE	3/16	31096	90797-2	3/16
10128-13	18	6	13	31096	90797-2	3/16	31270	90797-2	3/16
10128-14	18	36	14	NONE	NONE	1/4	30991	90797-3	3/16
10128-15	18	9	15	31096	90797-2	3/16	31770	90797-5	3/16
10128-16	18	207	16	31096	90797-2	3/16	31770	90797-5	1/4
10128-17	18	36	17	31096	90797-2	3/16	31770	90797-5	3/16
10128-18	10	38	18	31772	90797-4	3/16	31771	90797-4	3/16
10128-19	10	43	19	31771	90797-4	3/16	31826	90797-4	3/16
10128-20	18	41	20	30993	90797-3	3/16	30992	90797-3	3/16
10128-21	18	2 1/2	21	30992	90797-3	3/16	30992	90797-3	3/16
10128-22	18	71	22	30992	90797-3	3/16	31256	90797-3	3/16
10128-23	18	38	24	NONE	90797-3	1/4	30993	90797-3	3/16
10128-24	16	38	25	NONE	90797-3	1/4	30993	90797-3	3/16
10128-25	18	38	26	30997	90797-3	3/16	NONE	90797-3	1/4
10128-26	18	5	28	32830	90797-2	3/16	31251	90797-2	3/16
10128-27	18	212	29	31770	NONE	3/16	NONE	NONE	1/4
10128-28	18	212	30	31770	NONE	3/16	NONE	NONE	1/4
10128-29	18	8	NONE	NONE	NONE	1/4	32830	NONE	3/16
10128-30	18	3 1/2	31	30992	90797-3	3/16	30993	90797-3	3/16
10128-31	18	17	32	31770	90797-5	3/16	NONE	NONE	1/4
10128-32	18	4 3/4	NONE	NONE	NONE	1/4	31251	NONE	3/16
10128-33	10	130	33	31826	90797-4	5/16	31826	90797-4	5/16
10128-34	10	130	34	31826	90797-4	5/16	31826	90797-4	5/16
10128-35	18	4 3/4	NONE	NONE	NONE	1/4	31096	NONE	3/16
10128-36	10	31	18	31771	90797-4	3/16	31771	90797-4	3/16
10128-37	10	28	19	31771	90797-4	3/16	31771	90797-4	3/16
10128-38	16	30	20	30993	90797-3	3/16	30993	90797-3	3/16
10128-39	10	69	18	31772	90797-4	3/16	31771	90797-4	3/16
10128-40	16	105	22	30992	90797-3	3/16	31256	90797-3	3/16
10128-41	18	38	24	NONE	90797-3	1/4	NONE	NONE	3/16
10128-42	18	38	25	NONE	90797-3	1/4	NONE	NONE	3/16
10128-43	12	14	NONE	PACKARD #10 TERM.	NONE	3/4	PACKARD #10 TERM.	NONE	3/4
10128-44	10	72	3	31826	90797-4	5/16	31771	90797-4	3/16
10128-45	18	53	11	31770	90797-5	3/16	NONE	NONE	5/16
10128-46	18	2 3/4	5	31270	90797-2	3/16	NONE	NONE	5/16
10128-47	18	2 3/4	6	31770	90797-5	3/16	NONE	NONE	5/16
10128-48	18	74	16	31770	NONE	3/16	NONE	NONE	5/16
10128-49	18	30	17	31770	90797-5	3/16	NONE	NONE	5/16
10128-50	10	28	19	31771	90797-4	3/16	31826	90797-4	5/16
10128-51	18	68	20	31270	90797-2	3/16	30997	90797-2	3/16
10128-52	18	75	22	31270	90797-2	3/16	31251	90797-2	3/16
10128-53	18	12	15	NONE	NONE	5/16	31770	90797-5	3/16
10128-54	18	133	14	31770	90797-5	3/16	31770	NONE	3/16
10128-55	18	2 5/8	7	NONE	NONE	5/16	31096	90797-2	3/16
10128-56	10	5	4	31771	90797-4	3/16	31826	90797-4	5/16
10128-57	10	3 3/4	2	31826	90797-4	5/16	31826	90797-4	5/16
10128-58	10	43	18	31772	90797-4	3/16	31771	90797-4	3/16
10128-59	18	6	10	31096	90797-2	3/16	31096	90797-2	3/16
10128-60	10	10	3	31771	90797-4	3/16	31826	90797-4	5/16
10128-61	18	24	4	31270	90797-2	3/16	30997	90797-2	3/16
10128-62	18	24	5	31270	90797-2	3/16	31770	90797-5	3/16
10128-63	10	30	6	31771	90797-4	3/16	31826	90797-4	3/16
10128-64	10	48	7	31772	90797-4	3/16	31771	90797-4	3/16
10128-65	18	48	8	31770	90797-5	3/16	31251	90797-2	3/16
10128-66	10	3 3/4	9	31826	90797-4	5/16	31828	90797-4	5/16
10128-67	18	207	16	31770	90797-5	3/16	NONE	NONE	5/16
10128-68	18	15	12	31096	90797-2	3/16	31096	90797-2	3/16
10128-69	18	21	13	31096	90797-2	3/16	31096	90797-2	3/16
10128-70	18	58	14	31096	90797-2	3/16	31770	90797-5	3/16
10128-71	18	12	31	31096	90797-2	3/16	31096	90797-2	3/16
10128-72	18	8 1/2	NONE	30997	90797-2	3/16	31770	NONE	3/16
10128-73	18	18	NONE	31270	90797-2	3/16	NONE	NONE	1/2

NOTES:

1. WIRE TO BE SINGLE CONDUCTOR SPEC. AN-J-C-48A.
2. TERMINALS PURCH. AIRCRAFT-MARINE PRODUCTS, INC., UNLESS OTHERWISE NOTED.
3. MARKERS PURCH. WESTERN LITHOGRAPH CO. OR EQUIVALENT.

SEE ALSO 12177

LET.	REVISION	DATE	BY
AR	-73 ADDED	8-8-50	RC
AQ	-72 ADDED	11-7-50	RC
AP	REDRAWN WITHOUT CHANGE	8-4-49	R.M.

THIS DRAWING IS THE PROPERTY OF THE PIPER AIRCRAFT CORP. AND ITS POSSESSION BY UNAUTHORIZED PERSONS SHALL NOT BE CONSTRUED AS PERMISSION TO REPRODUCE FOR SALE, IN WHOLE OR IN PART, ANY DEVICES SHOWN THEREON

MODEL	PER PLANE	NEXT ASSEMBLY	SUPERSEDES	SUP. BY

PIPER AIRCRAFT CORP.
LOCK HAVEN, PENNA.

PART NO.	FREE ISSUE ONLY	NAME
90797		SLEEVE (SEE TABLE)

MATERIAL

SCALE — TOTAL WT.—LBS.

FINISH—PIPER SPECIFICATION #10

MANUFACTURING PRACTICES—PIPER SPECIFICATION #9

WIRE ASSEMBLY—SINGLE

DRAFTSMAN	CHECKER	STANDARDS
R.T.M. 8-4-49		

10128

A698

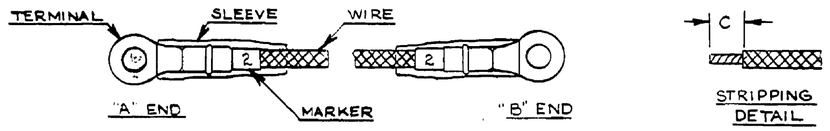

PART NO.	WIRE GA.	WIRE LENGTH	MARKER NO.	"A" END PURCH. PART NO.	"A" END SLEEVE	"A" END C	"B" END PURCH. PART NO.	"B" END SLEEVE	"B" END C
10128-2	10	6 1/2	2	31828	90797-4	5/16	31826	90797-4	5/16
10128-3	10	18 1/2	3	31826	90797-4	5/16	31826	90797-4	5/16
10128-4	10	22	4	31826	90797-4	5/16	31826	90797-4	5/16
10128-5	18	23	5	31270	90797-2	3/16	31096	90797-2	3/16
10128-6	18	140	6	31096	90797-2	3/16	31270	90797-2	3/16
10128-7	18	2 1/2	7	30992	90797-3	3/16	NONE	NONE	1/4
10128-8	18	22	8	NONE	NONE	1/4	31096	90797-2	3/16
10128-9	18	12	9	31096	90797-2	3/16	NONE	NONE	3/16
10128-10	18	12	10	NONE	NONE	3/16	31096	90797-2	3/16
10128-11	18	29	11	31096	90797-2	3/16	NONE	NONE	3/16
10128-12	18	29	12	NONE	NONE	3/16	31096	90797-2	3/16
10128-13	18	6	13	31096	90797-2	3/16	31270	90797-2	3/16
10128-14	18	36	14	NONE	NONE	1/4	30991	90797-3	3/16
10128-15	18	9	15	31096	90797-2	3/16	31770	90797-5	3/16
10128-16	18	207	16	31096	90797-2	3/16	31770	90797-5	1/4
10128-17	18	36	17	31096	90797-2	3/16	31770	90797-5	3/16
10128-18	10	38	18	31772	90797-4	3/16	31771	90797-4	3/16
10128-19	10	43	19	31771	90797-4	3/16	31826	90797-4	3/16
10128-20	18	41	20	30993	90797-3	3/16	30992	90797-3	3/16
10128-21	18	2 1/2	21	30992	90797-3	3/16	30992	90797-3	3/16
10128-22	18	71	22	30992	90797-3	3/16	31256	90797-3	3/16
10128-23	18	38	24	NONE	90797-3	1/4	30993	90797-3	3/16
10128-24	16	38	25	NONE	90797-3	1/4	30993	90797-3	3/16
10128-25	18	38	26	30997	90797-3	3/16	NONE	90797-3	1/4
10128-26	18	5	28	32830	90797-2	3/16	31251	90797-2	3/16
10128-27	18	212	29	31770	NONE	3/16	NONE	NONE	1/4
10128-28	18	212	30	31770	NONE	3/16	NONE	NONE	1/4
10128-29	18	8	NONE	NONE	NONE	1/4	32830	NONE	3/16
10128-30	18	3 1/2	31	30992	90797-3	3/16	30993	90797-3	3/16
10128-31	18	17	32	31770	90797-5	3/16	NONE	NONE	1/4
10128-32	18	4 3/4	NONE	NONE	NONE	1/4	31251	NONE	3/16
10128-33	10	130	33	31826	90797-4	5/16	31826	90797-4	5/16
10128-34	10	130	34	31826	90797-4	5/16	31826	90797-4	5/16

PART NO.	WIRE GA.	WIRE LENGTH	MARKER NO.	"A" END PURCH. PART NO.	"A" END SLEEVE	"A" END C	"B" END PURCH. PART NO.	"B" END SLEEVE	"B" END C
10128-35	18	4 3/4	NONE	NONE	NONE	1/4	31096	NONE	3/16
10128-36	10	31	18	31771	90797-4	3/16	31771	90797-4	3/16
10128-37	10	28	19	31771	90797-4	3/16	31771	90797-4	3/16
10128-38	16	30	20	30993	90797-3	3/16	30993	90797-3	3/16
10128-39	10	69	18	31772	90797-4	3/16	31771	90797-4	3/16
10128-40	16	105	22	30992	90797-3	3/16	31256	90797-3	3/16
10128-41	18	38	24	NONE	90797-3	1/4	NONE	NONE	3/16
10128-42	18	38	25	NONE	90797-3	1/4	NONE	NONE	3/16
10128-43	12	14	NONE	PACKARD #18 TERM.	NONE	3/4	PACKARD #18 TERM.	NONE	3/4
10128-44	10	72	3	31826	90797-4	5/16	31771	90797-4	3/16
10128-45	18	53	11	31770	90797-5	3/16	NONE	NONE	5/16
10128-46	18	2 3/4	5	31270	90797-2	3/16	NONE	NONE	5/16
10128-47	18	2 3/4	6	31770	90797-5	3/16	NONE	NONE	5/16
10128-48	18	74	16	31770	NONE	3/16	NONE	NONE	5/16
10128-49	18	30	17	31770	90797-5	3/16	NONE	NONE	5/16
10128-50	10	28	19	31771	90797-4	3/16	31826	90797-4	5/16
10128-51	18	68	20	31270	90797-2	3/16	30997	90797-2	3/16
10128-52	18	75	22	31270	90797-2	3/16	31251	90797-2	3/16
10128-53	18	12	15	NONE	NONE	5/16	31770	90797-5	3/16
10128-54	18	133	14	31770	90797-5	3/16	31770	NONE	3/16
10128-55	18	2 5/8	7	NONE	NONE	5/16	31096	90797-2	3/16
10128-56	10	5	4	31771	90797-4	3/16	31826	90797-4	5/16
10128-57	10	3 3/4	2	31826	90797-4	5/16	31826	90797-4	5/16
10128-58	10	43	18	31772	90797-4	3/16	31771	90797-4	3/16
10128-59	18	6	10	31096	90797-2	3/16	31096	90797-2	3/16
10128-60	10	10	3	31771	90797-4	3/16	31826	90797-4	5/16
10128-61	18	24	4	31270	90797-2	3/16	30997	90797-2	3/16
10128-62	18	24	5	31270	90797-2	3/16	31770	90797-5	3/16
10128-63	10	30	6	31771	90797-4	3/16	31826	90797-4	3/16
10128-64	10	48	7	31772	90797-4	3/16	31771	90797-4	3/16
10128-65	18	48	8	31770	90797-5	3/16	31251	90797-2	3/16
10128-66	10	3 3/4	9	31826	90797-4	5/16	31826	90797-4	5/16
10128-67	18	207	16	31770	90797-5	3/16	NONE	NONE	5/16

PART NO.	WIRE GA.	WIRE LENGTH	MARKER NO.	"A" END PURCH. PART NO.	"A" END SLEEVE	"A" END C	"B" END PURCH. PART NO.	"B" END SLEEVE	"B" END C
10128-68	18	15	12	31096	90797-2	3/16	31096	90797-2	3/16
10128-69	18	21	13	31096	90797-2	3/16	31096	90797-2	3/16
10128-70	18	58	14	31096	90797-2	3/16	31770	90797-5	3/16
10128-71	18	12	31	31096	90797-2	3/16	31096	90797-2	3/16
10128-72	18	8 1/2	NONE	30997	90797-2	3/16	31770	NONE	3/16
10128-73	18	10	NONE	31270	90797-2	3/16	NONE	NONE	1/2

NOTES:

1. WIRE TO BE SINGLE CONDUCTOR, SPEC. AN-J-C-48A.
2. TERMINALS PURCH. AIRCRAFT-MARINE PRODUCTS, INC., UNLESS OTHERWISE NOTED.
3. MARKERS PURCH. WESTERN LITHOGRAPH CO. OR EQUIVALENT.

SEE ALSO 12177

LET.	REVISION	DATE	BY
AR	-73 ADDED	5-6-50	RC
AQ	-72 ADDED	1-17-50	RC
AP	REDRAWN WITHOUT CHANGE	8-4-49	R.M.

THIS DRAWING IS THE PROPERTY OF THE PIPER AIRCRAFT CORP. AND ITS POSSESSION BY UNAUTHORIZED PERSONS SHALL NOT BE CONSTRUED AS PERMISSION TO REPRODUCE FOR SALE, IN WHOLE OR IN PART, ANY DEVICES SHOWN THEREON

MODEL	PER PLANE	NEXT ASSEMBLY	SUPERSEDES	SUP. BY

PIPER AIRCRAFT CORP.
LOCK HAVEN, PENNA.

90797	NEW ONLY	SLEEVE (SEE TABLE)
PART No.	NO. REQ.	NAME
SCALE		MATERIAL
FINISH—PIPER SPECIFICATION #10		TOTAL WT.—LBS.
MANUFACTURING PRACTICES—PIPER SPECIFICATION #9		

WIRE ASSEMBLY - SINGLE

DRAFTSMAN	CHECKER	STANDARDS
R.T.M. 8-4-49		

10128

A698

.191 HOLE
4 REQ.
TO MATCH MATING PARTS

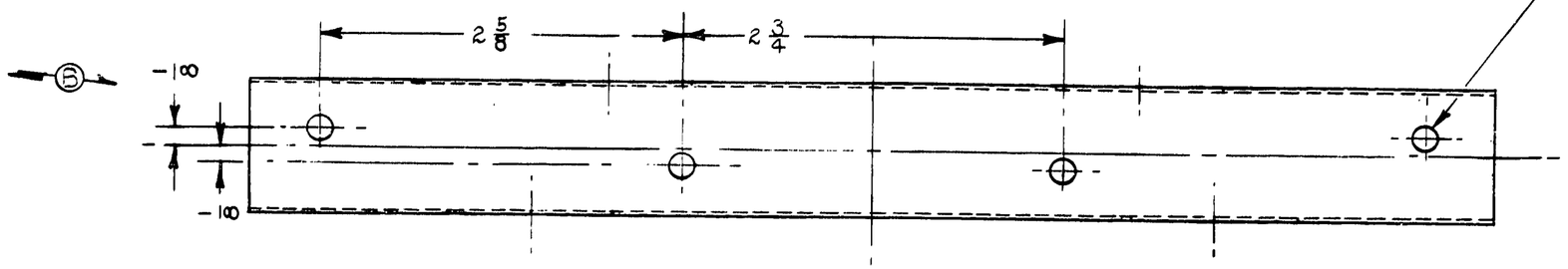

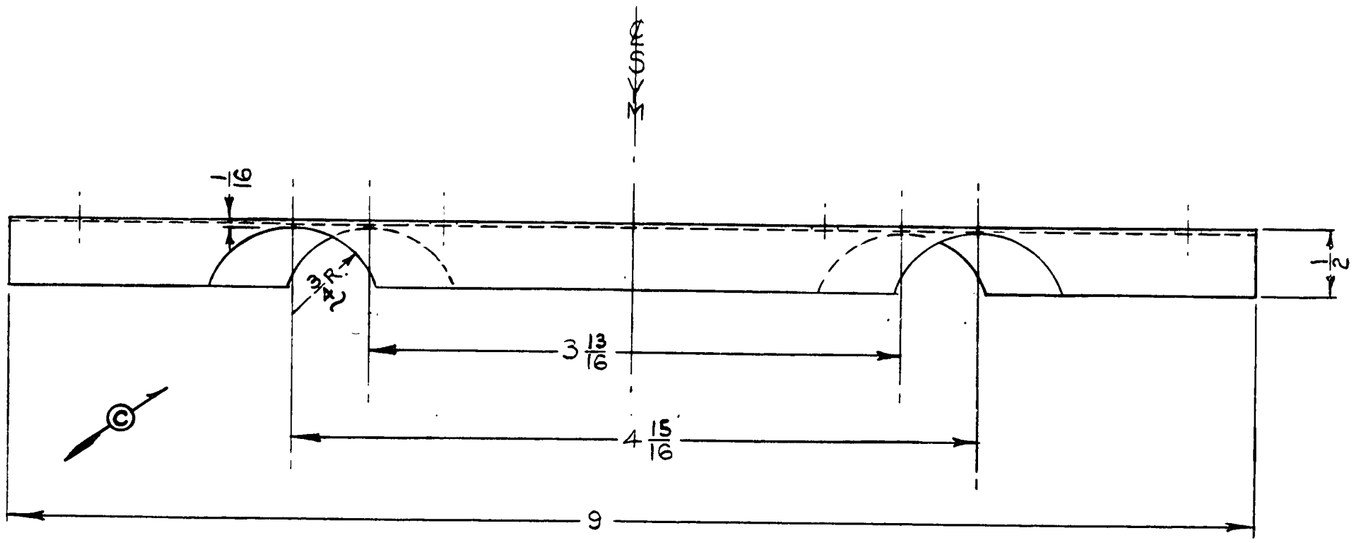

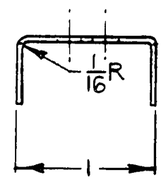

"This drawing is the property of the Piper Aircraft Corp. and its possession by unauthorized persons shall not be construed as permission to reproduce for sale, in whole or in part, any devices shown thereon."

LET.	REVISION	DATE	BY
C	3/4R WAS 5/8 R	6-3-46	RAC
B	.191 HOLES RELOCATED	3-1-46	I.DB.
A	3'3/16 WAS 3"16; 4'15/16 WAS 4'13/16	3-1-46	I.DB.

MODEL	PER PLANE	NEXT ASSEMBLY	SUPERSEDES	SUP. BY
J3	1	24806	23731	

PIPER AIRCRAFT CORP.
LOCK HAVEN, PENNA.

PART No.	No. REQ.	SIZE	MATERIAL
		.045 x 1 27/32 x 9	#1025 STEEL

SCALE FULL SIZE — TOTAL WT.—LBS.
FINISH—PIPER SPECIFICATION #10
MANUFACTURING PRACTICES—PIPER SPECIFICATION #9

CHANNEL – BRAKE UNIT SUPPORT

E. L. N.	R.E.T.		
11-21-45	11-21-45		10134
DRAFTSMAN	CHECKER	STANDARDS	

409

A409

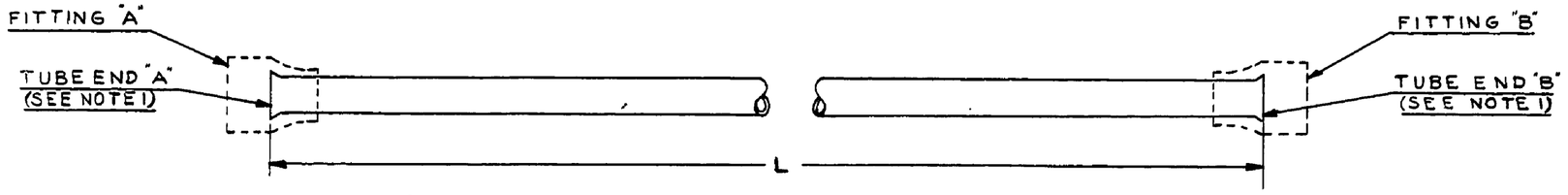

ASSY. NO.	TUBE NO.	L	O.D.	WALL THICK.	MAT'L.	END FITTINGS A	END FITTINGS B	TUBE END A	TUBE END B
———	10143-2	118	3/8	.032	3S-0 ALUM.	NONE	NONE	PLAIN	PLAIN
10143-3	10143-4	114	3/8	.032	3S-0 ALUM.	PARKER SLEEVE #6T-D&NUT #6BT-D	NONE	FLARED	PLAIN
10143-5	10143-6	56	1/4	.032	3S-0 ALUM.	W/H #105×4	PARKER SLEEVE #4T-D&NUT #4BT-D	FLARED	FLARED
10143-7	10143-8	25½	1/4	.032	3S-0 ALUM.	W/H #41×4	W/H #41×4	FLARED	FLARED
10143-9	10143-10	46½	1/8	.032	COPPER	W/H #105×2	NONE	FLARED	PLAIN
10143-11	10143-12	25½	1/8	.032	COPPER	W/H #105×2	NONE	FLARED	PLAIN
10143-13	10143-14	21½	1/8	.032	COPPER	W/H #105×2	NONE	FLARED	PLAIN
———	10143-15	2	3/8	.032	3S-0 ALUM.	NONE	NONE	FLARED	PLAIN
10143-16	10143-17	65	1/8	.032	COPPER	W/H #105×2	NONE	FLARED	PLAIN
10143-18	10143-19	4	1/8	.032	COPPER	W/H #105×2	NONE	FLARED	PLAIN
10143-20	10143-21	10½	1/8	.032	COPPER	W/H #105×2	NONE	FLARED	PLAIN
10143-22	10143-23	23	1/4	.032	3S-0 ALUM.	W/H #41×4	W/H #41×4	FLARED	FLARED
10143-24	10143-25	72	1/4	.032	3S-0 ALUM.	W/H #105×4	NONE	FLARED	PLAIN
10143-26	10143-27	1½	1/4	.032	3S-0 ALUM.	W/H #41×4	NONE	FLARED	PLAIN
10143-28	10143-29	10	3/8	.032	3S-0 ALUM.	W/H #41×6	NONE	FLARED	PLAIN
10143-30	10143-31	9	3/8	.032	3S-0 ALUM.	W/H #41×6	NONE	FLARED	PLAIN
10143-32	10143-33	6 3/16	3/8	.032	3S-0 ALUM.	W/H #41×6	NONE	FLARED	PLAIN
———	10143-34	111	3/8	.032	3S-0 ALUM.	NONE	NONE	PLAIN	PLAIN
———	10143-35	95	3/8	.032	3S-0 ALUM.	NONE	NONE	PLAIN	PLAIN
10143-36	10143-37	69	1/4	.032	3S-0 ALUM.	W/H #41×4	W/H #105×4	FLARED	FLARED
10143-38	10143-39	3	1/4	.032	3S-0 ALUM.	W/H #41×4	W/H #41×4	FLARED	FLARED
10143-40	10143-41	20½	1/4	.032	3S-0 ALUM.	W/H #105×4	W/H #105×4	FLARED	FLARED
10143-42	10143-43	24	1/4	.032	3S-0 ALUM.	W/H #105×4	W/H #105×4	FLARED	FLARED
10143-44	10143-45	84	3/8	.032	3S-0 ALUM.	W/H #105×6	NONE	FLARED	PLAIN
10143-46	10143-47	126	3/8	.032	3S-0 ALUM.	W/H #105×6	NONE	FLARED	PLAIN
10143-48	10143-49	13	3/8	.032	3S-0 ALUM.	W/H #105×6	NONE	FLARED	PLAIN
10143-50	10143-51	52	1/4	.032	3S-0 ALUM.	W/H #105×4	NONE	FLARED	PLAIN

ASSY. NO.	TUBE NO.	L	O.D.	WALL THICK.	MAT'L.	END FITTINGS A	END FITTINGS B	TUBE END A	TUBE END B
10143-52	10143-53	21 3/8	3/8	.032	3S-0 ALUM.	W/H #105×6	NONE	FLARED	PLAIN
10143-54	10143-55	1 7/8	3/8	.032	3S-0 ALUM.	W/H #105×6	NONE	FLARED	PLAIN
———	10143-56	43	1/4	.032	3S-0 ALUM.	NONE	NONE.	PLAIN	PLAIN
10143-57	10143-58	30	1/4	.032	3S-0 ALUM.	W/H #105×4	W/H #105×4	FLARED	FLARED
10143-59	10143-60	31	3/8	.032	3S-0 ALUM.	W/H #105×6	NONE	FLARED	PLAIN
10143-61	10143-62	2½	1/8	.032	COPPER	W/H #105×2	NONE	FLARED	PLAIN
10143-63	10143-64	43	1/8	.032	COPPER	W/H #105×2	NONE	FLARED	PLAIN
10143-65	10143-66	52	1/8	.032	COPPER	W/H #105×2	NONE	FLARED	PLAIN
10143-67	10143-68	75	3/8	.032	3S-0 ALUM.	W/H #105×6	NONE	FLARED	PLAIN
10143-69	10143-70	23½	3/8	.032	3S-0 ALUM.	W/H #105×6	NONE	FLARED	PLAIN
10143-71	10143-72	7½	3/8	.032	3S-0 ALUM.	W/H #105×6	NONE	FLARED	PLAIN
———	10143-73	13	3/8	.032	3S-0 ALUM.	NONE	NONE	PLAIN	PLAIN
———	10143-74	27 3/8	3/8	.032	3S-0 ALUM.	NONE	NONE	PLAIN	PLAIN
10143-75	10143-76	15 3/4	1/4	.032	3S-0 ALUM.	W/H #105×4	W/H #41×4	FLARED	FLARED
10143-77	10143-78	10½	3/8	.032	3S-0 ALUM.	W/H #105×6	W/H #105×6	FLARED	FLARED
10143-79	10143-80	23	1/8	.032	COPPER	W/H #105×2	NONE	FLARED	PLAIN
10143-81	10143-82	10 3/4	1/4	.032	3S-0 ALUM.	W/H #105×4	W/H #41×4	FLARED	FLARED

NOTES:
1. FOR TUBE END FLARES SEE DWG 82551.
2. WEATHERHEAD (W/H) PARTS PURCHASED FROM THE WEATHERHEAD CO. PARKER PARTS PURCHASED FROM PARKER APPLIANCE CO.
3. SEE ALSO DWG. 11987.

THIS DRAWING IS THE PROPERTY OF THE PIPER AIRCRAFT CORP. AND ITS POSSESSION BY UNAUTHORIZED PERSONS SHALL NOT BE CONSTRUED AS PERMISSION TO REPRODUCE FOR SALE, IN WHOLE OR IN PART. ANY DEVICES SHOWN THEREON

LET.	REVISION	DATE	BY
AH	REDRAWN & REVISED	6-4-51	C.K.

MODEL	PER PLANE	NEXT ASSEMBLY	SUPERSEDES	SUP. BY

PIPER AIRCRAFT CORP.
LOCK HAVEN, PENNA.

PART No.	NO. REQ.	MATERIAL
82551	REF.	TUBE END FLARES

SCALE — TOTAL WT.—LBS.
FINISH—PIPER SPECIFICATION #10
MANUFACTURING PRACTICES—PIPER SPECIFICATION #9

TUBE ASSEMBLY

DRAFTSMAN	CHECKER	STANDARDS
C. E. K. 6-4-51	H. R. K. 6-18-51	

10143

A699

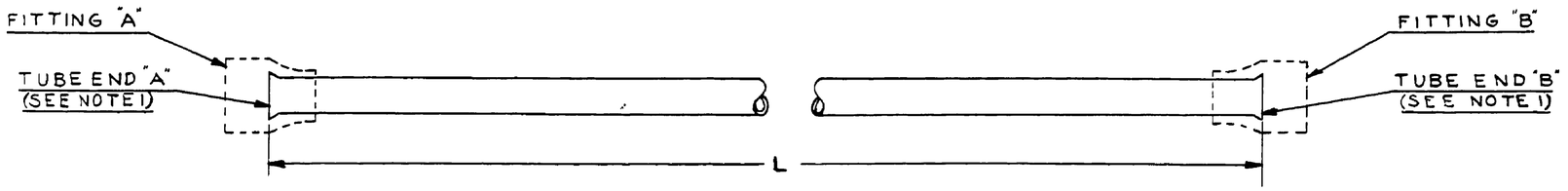

ASSY. NO.	TUBE NO.	L	O.D.	WALL THICK.	MAT'L.	END FITTINGS		TUBE END	
						A	B	A	B
———	10143-2	118	3/8	.032	3S-0 ALUM.	NONE	NONE	PLAIN	PLAIN
10143-3	10143-4	114	3/8	.032	3S-0 ALUM.	PARKER SLEEVE #6T-D&NUT #6BT-D	NONE	FLARED	PLAIN
10143-5	10143-6	56	1/4	.032	3S-0 ALUM.	W/H #105×4	PARKER SLEEVE #4T-D&NUT #4BT-D	FLARED	FLARED
10143-7	10143-8	25 1/2	1/4	.032	3S-0 ALUM.	W/H #41×4	W/H #41×4	FLARED	FLARED
10143-9	10143-10	46 1/2	1/8	.032	COPPER	W/H #105×2	NONE	FLARED	PLAIN
10143-11	10143-12	25 1/2	1/8	.032	COPPER	W/H #105×2	NONE	FLARED	PLAIN
10143-13	10143-14	21 1/2	1/8	.032	COPPER	W/H #105×2	NONE	FLARED	PLAIN
———	10143-15	2	3/8	.032	3S-0 ALUM.	NONE	NONE	FLARED	PLAIN
10143-16	10143-17	65	1/8	.032	COPPER	W/H #105×2	NONE	FLARED	PLAIN
10143-18	10143-19	4	1/8	.032	COPPER	W/H #105×2	NONE	FLARED	PLAIN
10143-20	10143-21	10 1/2	1/8	.032	COPPER	W/H #105×2	NONE	FLARED	PLAIN
10143-22	10143-23	23	1/4	.032	3S-0 ALUM.	W/H #41×4	W/H #41×4	FLARED	FLARED
10143-24	10143-25	72	1/4	.032	3S-0 ALUM.	W/H #105×4	NONE	FLARED	PLAIN
10143-26	10143-27	1 1/2	1/4	.032	3S-0 ALUM.	W/H #41×4	NONE	FLARED	PLAIN
10143-28	10143-29	10	3/8	.032	3S-0 ALUM.	W/H #41×6	NONE	FLARED	PLAIN
10143-30	10143-31	9	3/8	.032	3S-0 ALUM.	W/H #41×6	NONE	FLARED	PLAIN
10143-32	10143-33	6 3/16	3/8	.032	3S-0 ALUM.	W/H #41×6	NONE	FLARED	PLAIN
———	10143-34	111	3/8	.032	3S-0 ALUM.	NONE	NONE	PLAIN	PLAIN
———	10143-35	95	3/8	.032	3S-0 ALUM.	NONE	NONE	PLAIN	PLAIN
10143-36	10143-37	69	1/4	.032	3S-0 ALUM.	W/H #41 ×4	W/H #105×4	FLARED	FLARED
10143-38	10143-39	3	1/4	.032	3S-0 ALUM.	W/H #41×4	W/H #41×4	FLARED	FLARED
10143-40	10143-41	20 1/2	1/4	.032	3S-0 ALUM.	W/H #105×4	W/H #105 ×4	FLARED	FLARED
10143-42	10143-43	24	1/4	.032	3S-0 ALUM.	W/H #105 ×4	W/H #105 ×4	FLARED	FLARED
10143-44	10143-45	84	3/8	.032	3S-0 ALUM.	W/H #105×6	NONE	FLARED	PLAIN
10143-46	10143-47	126	3/8	.032	3S-0 ALUM.	W/H #105×6	NONE	FLARED	PLAIN
10143-48	10143-49	13	3/8	.032	3S-0 ALUM.	W/H #105×6	NONE	FLARED	PLAIN
10143-50	10143-51	52	1/4	.032	3S-0 ALUM.	W/H #105×4	NONE	FLARED	PLAIN

ASSY. NO.	TUBE NO.	L	O.D.	WALL THICK	MAT'L.	END FITTINGS		TUBE END	
						A	B	A	B
10143-52	10143-53	21 3/8	3/8	.032	3S-0 ALUM.	W/H #105 ×6	NONE	FLARED	PLAIN
10143-54	10143-55	1 7/8	3/8	.032	3S-0 ALUM.	W/H #105×6	NONE	FLARED	PLAIN
———	10143-56	43	1/4	.032	3S-0 ALUM.	NONE	NONE	PLAIN	PLAIN
10143-57	10143-58	30	1/4	.032	3S-0 ALUM.	W/H #105×4	W/H #105 × 4	FLARED	FLARED
10143-59	10143-60	31	3/8	.032	3S-0 ALUM.	W/H #105×6	NONE	FLARED	PLAIN
10143-61	10143-62	2 1/2	1/8	.032	COPPER	W/H #105×2	NONE	FLARED	PLAIN
10143-63	10143-64	43	1/8	.032	COPPER	W/H #105×2	NONE	FLARED	PLAIN
10143-65	10143-66	52	1/8	.032	COPPER	W/H #105×2	NONE	FLARED	PLAIN
10143-67	10143-68	75	3/8	.032	3S-0 ALUM.	W/H #105×6	NONE	FLARED	PLAIN
10143-69	10143-70	23 1/2	3/8	.032	3S-0 ALUM.	W/H #105×6	NONE	FLARED	PLAIN
10143-71	10143-72	7 1/2	3/8	.032	3S-0 ALUM.	W/H #105×6	NONE	FLARED	PLAIN
———	10143-73	13	3/8	.032	3S-0 ALUM.	NONE	NONE	PLAIN	PLAIN
———	10143-74	27 3/8	3/8	.032	3S-0 ALUM.	NONE	NONE	PLAIN	PLAIN
10143-75	10143-76	15 3/4	1/4	.032	3S-0 ALUM.	W/H #105×4	W/H #41×4	FLARED	FLARED
10143-77	10143-78	10 1/2	3/8	.032	3S-0 ALUM.	W/H #105×6	W/H #105×6	FLARED	FLARED
10143-79	10143-80	23	1/8	.032	COPPER	W/H #105×2	NONE	FLARED	PLAIN
10143-81	10143-82	10 3/4	1/4	.032	3S-0 ALUM.	W/H #105×4	W/H #41×4	FLARED	FLARED

NOTES:
1. FOR TUBE END FLARES SEE DWG 82551.
2. WEATHERHEAD (W/H) PARTS PURCHASED FROM THE WEATHERHEAD CO. PARKER PARTS PURCHASED FROM PARKER APPLIANCE CO.
3. SEE ALSO DWG. 11987.

THIS DRAWING IS THE PROPERTY OF THE PIPER AIRCRAFT CORP. AND ITS POSSESSION BY UNAUTHORIZED PERSONS SHALL NOT BE CONSTRUED AS PERMISSION TO REPRODUCE FOR SALE, IN WHOLE OR IN PART, ANY DEVICES SHOWN THEREON

LET.	REVISION	DATE	BY
AH	REDRAWN & REVISED	6-4-51	C.K.

MODEL	PER PLANE	NEXT ASSEMBLY	SUPERSEDES	SUP. BY

PIPER AIRCRAFT CORP.
LOCK HAVEN, PENNA.

PART NO.	REF. NO. REQ.	MATERIAL
82551	REF.	TUBE END FLARES

SCALE — TOTAL WT.—LBS.
FINISH—PIPER SPECIFICATION #10
MANUFACTURING PRACTICES—PIPER SPECIFICATION #9

TUBE ASSEMBLY

DRAFTSMAN	CHECKER	STANDARDS
C. E. K. 6-4-51	H. R. K. 6-18-51	

10143

694

A699

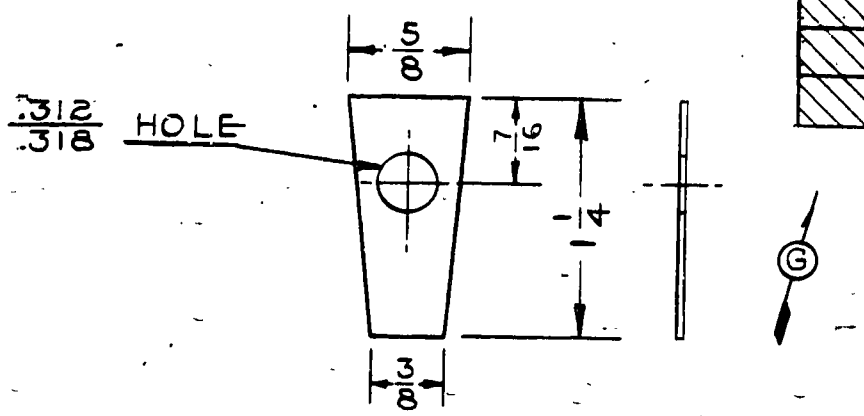

MODEL	PER SHIP	NEXT ASSEMBLY
J5C	32	14805, 14813, 14845, 14893, 14903
J3	24	14283, 14242, 14252, 14302, 14312, 14433
L-14	32	90405, 90404

LIMITS, SHOP PRACTICES AND FINISH. UNLESS OTHERWISE NOTED, TO BE IN ACCORDANCE WITH PIPER SPECIFICATIONS #9 AND #10.

PART No.	No. REQ.	SIZE	DESCRIPTION
		.018/.025 x 5/8 x 1 1/4	TYPE 347 ST. STEEL ANNEALED 2D. FINISH
		MATERIAL	

SCALE FULL SIZE — TOTAL WT. - LBS.

FINISH

PLATE — LOCK

LET.	REVISION	DATE	BY
G	L-14 MODEL REF. ADDED	3-14-45	E.L.N.
F	REDRAWN & REVISED	5-25-44	I.M.

NOTED MODEL	NOTED PER SHIP	NOTED NEXT ASSEMBLY	SUPERSEDES	SUP. BY

PIPER AIRCRAFT CORP.
LOCK HAVEN, PENNA.

DRAWN	CHECKED	APPROVED
I. McNERNEY 5-25-44	E.E.T. 6-20-44	

10151

A 8

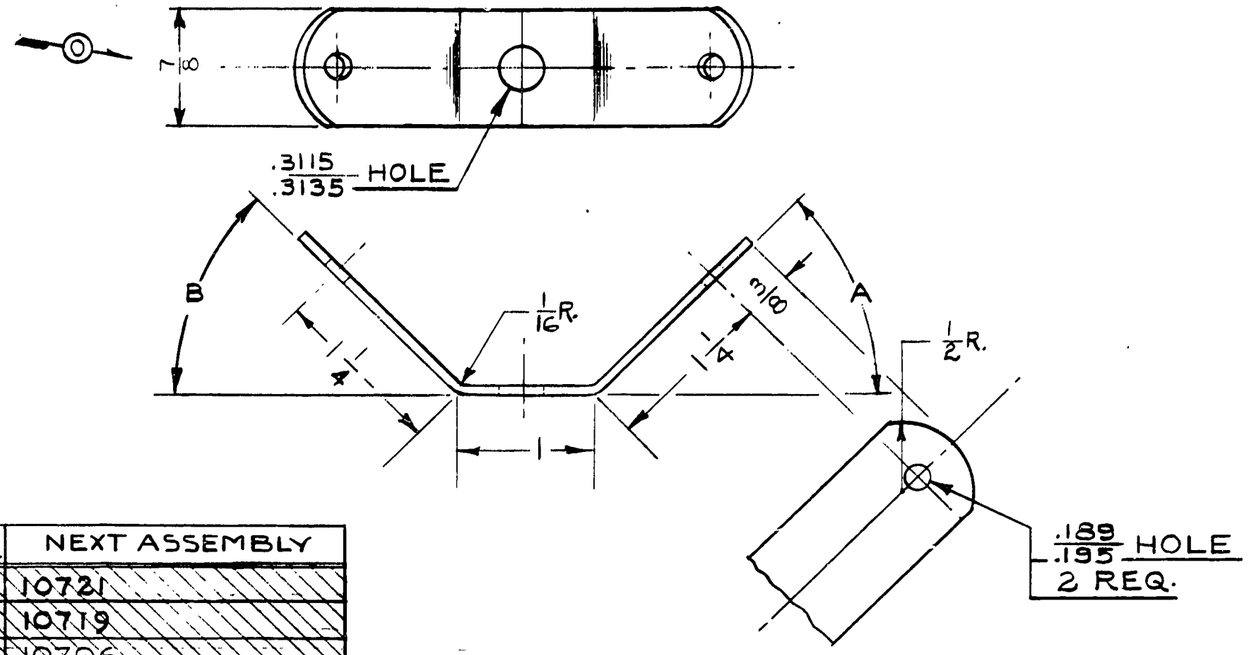

PART NO.	A	B	MODEL	PER PLANE	NEXT ASSEMBLY
10161 – 2	29°	45°	J5C	4	10721
10161 – 3	45°	45°	J5C	12	10719
10161 – 4	37½°	37½°	J3	8	10706
10161 – 5	30	37½°	J3	4	10707

NOTE:
PARTS ON 10171 MAY BE MADE FROM THESE PARTS.

LET.	REVISION	DATE	BY
O	7/8 WAS 1	7-31-46	E.L.N
N	-3 N.A. 10719 WAS 14893 & 14903	6-20-46	BC
M	-2 N.A. 10721 WAS 14805 & 14813	6-20-46	BC
L	-5 N.A. 10707 WAS 14283 & 14433	6-20-46	BC
K	-4 N.A. 10706 WAS 14252	6-20-46	BC
J	REDRAWN & REVISED	1-23-46	I.D.B.

THIS DRAWING IS THE PROPERTY OF THE PIPER AIRCRAFT CORP. AND ITS POSSESSION BY UNAUTHORIZED PERSONS SHALL NOT BE CONSTRUED AS PERMISSION TO REPRODUCE FOR SALE, IN WHOLE OR IN PART, ANY DEVICES SHOWN THEREON

MODEL	PER PLANE	NEXT ASSEMBLY	SUPERSEDES	SUP. BY
NOTED	NOTED	NOTED		

PIPER AIRCRAFT CORP.
LOCK HAVEN, PENNA.

PART No.	No. REQ.	SIZE	DESCRIPTION / MATERIAL
		.062 × 7/8 × 4 1/4	STAINLESS STEEL, TYPE 302 ANNEALED, 2D. FINISH

SCALE FULL SIZE — TOTAL WT.–LBS.
FINISH–PIPER SPECIFICATION #10
MANUFACTURING PRACTICES–PIPER SPECIFICATION #9

FITTING —TYPE 1
DRAG WIRE PULL

DRAFTSMAN	CHECKER	STANDARDS
I.D.B 1-23-46	R.E.T. 1-29-46	

10161

410

A410

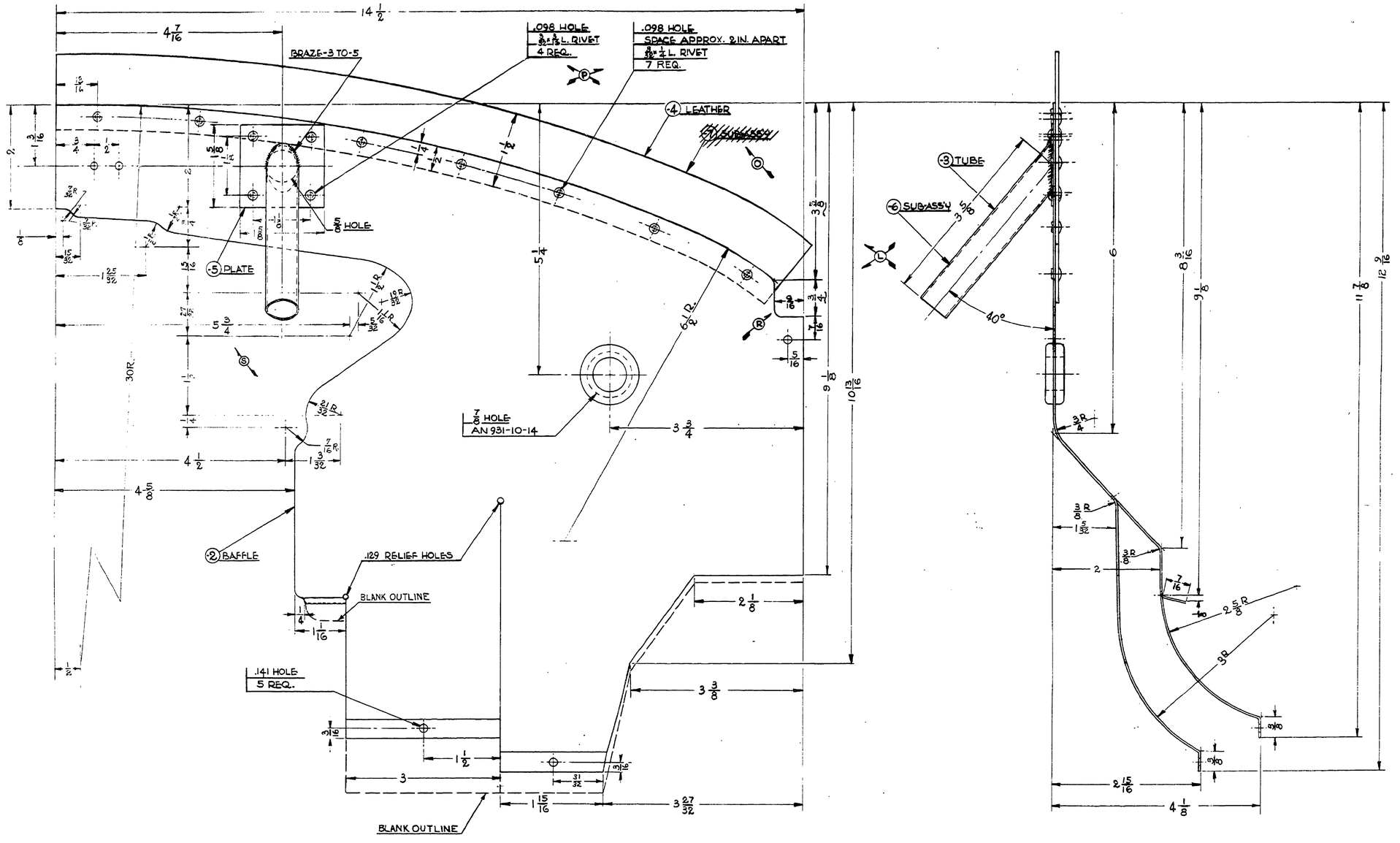

NOTES:
1. ALL OUTSIDE CORNERS 7/32 RADII & INSIDE CORNERS 5/32 RADII UNLESS OTHERWISE NOTED.
2. ALL BEND RADII 1/32 UNLESS OTHERWISE NOTED.

LET.	REVISION	DATE	BY
U	BLANK OUTLINE ADDED	5-3-47	HNZ
T	RIVET BURRS REMOVED	2-24-47	T.N.H
S	5 3/4 WAS 5 1/4	12-20-46	JEH
R	3/8 WAS 5/8 LG. REQ. WAS 9	12-20-46	JEH
Q	20-4 SILK THRD. REMOVED	12-20-46	JEH
P	4 REQ. WAS 2; 1/2 LG WAS 3/8 LG	12-20-46	JEH
O	CANCELED -1 SUB-ASS'Y.	12-20-46	JEH
N	REMOVED 2-3/32 x 3/8 L. RIVETS	12-20-46	JEH
M	FOR-4 1 REQ WAS 2	12-20-46	JEH
L	3 3/4 WAS 3 5/8; 3/8 WAS 5/8	12-20-46	T.N.H
K	3S-0 ALUM WAS 2S-0 FOR -3	10-17-46	P.F.M
J	REVISED & REDRAWN	7-3-46	MC

THIS DRAWING IS THE PROPERTY OF THE PIPER AIRCRAFT CORP. AND ITS POSSESSION BY UNAUTHORIZED PERSONS SHALL NOT BE CONSTRUED AS PERMISSION TO REPRODUCE FOR SALE, IN WHOLE OR IN PART, ANY DEVICES SHOWN THEREON.

MODEL	PER PLANE	NEXT ASSEMBLY	SUPERSEDES	SUP. BY
		7A9A3	10163	

PIPER AIRCRAFT CORP.
LOCK HAVEN, PENNA.

DRAFTSMAN	CHECKER	STANDARDS
7-3-46	9-18-46	

PART NO.	NO. REQ.	MATERIAL SIZE	DESCRIPTION
	7	3/32 x 1/4 L.	2 S-O ALUM. BR. HD. RIVETS
	4	3/32 x 3/16 L.	
AN 931-10-14	1	GROMMET	
-7		SUB-ASSY CONSISTS OF -5 & -6	
-6		SUB-ASSY CONSISTS OF -3 & -5	
-5	1	.032 x 1 5/8 x 3 5/8	3S-1/2 H ALUM.
-4	1	1/16 x 2 3/4 x 15 3/8	GENUINE LEATHER* MB
-3	1	7/8 x .032 x 4	3 S-O ALUM. TUBE
-2	1	.032 x 13 3/4 x 14 1/2	3S-1/2 H ALUM.

SCALE FULL SIZE — TOTAL WT.—LBS.
FINISH—PIPER SPECIFICATION #10
MANUFACTURING PRACTICES—PIPER SPECIFICATION #9

BAFFLE ASSEMBLY — ENGINE RIGHT REAR

10160

A832

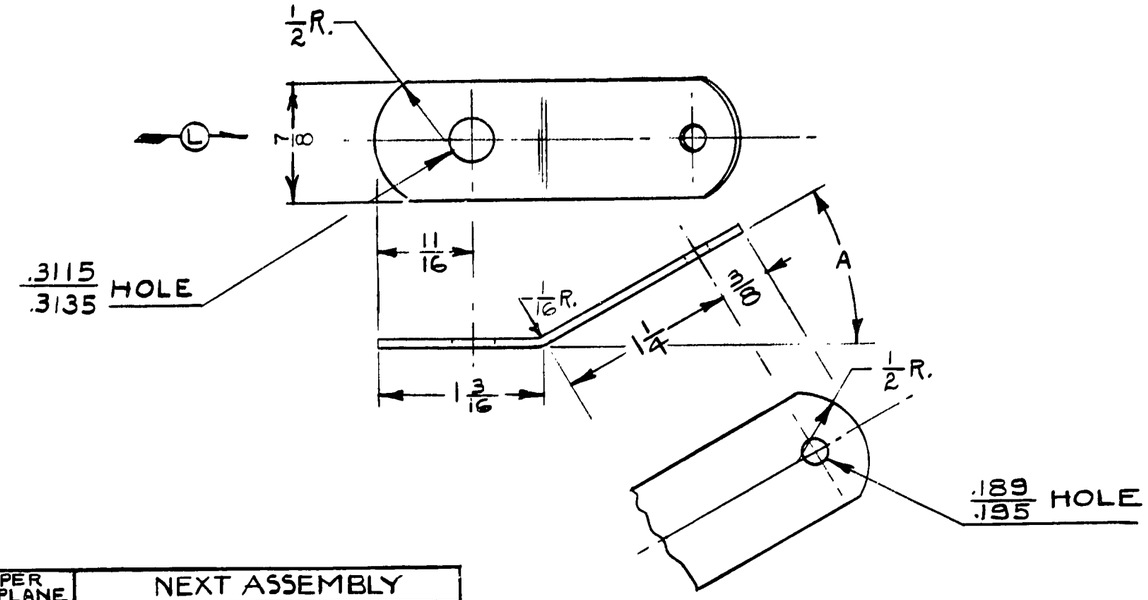

PART NO.	A	MODEL	PER PLANE	NEXT ASSEMBLY
10171-2	45°	J5C	4	10714
10171-3	29°	J5C	4	10720
10171-4	37½°	J3	4	10705
10171-5	30	J3	4	10709

NOTE:
THESE PARTS MAY BE MADE FROM 10161.

LET.	REVISION	DATE	BY
L	7/8 WAS 1	7-31-46	E.L.N.
K	-5 N.A. 10709 WAS 14242	6-20-46	BC
J	-4 N.A. 10705 WAS 14302 & 14312	6-20-46	BC
H	-2 N.A. 10714 WAS 14845 -3 N.A. 10720 WAS 14903	6-19-46	RSG
G	REDRAWN & REVISED	1-23-46	I.D.B.

THIS DRAWING IS THE PROPERTY OF THE PIPER AIRCRAFT CORP. AND ITS POSSESSION BY UNAUTHORIZED PERSONS SHALL NOT BE CONSTRUED AS PERMISSION TO REPRODUCE FOR SALE, IN WHOLE OR IN PART, ANY DEVICES SHOWN THEREON

NOTES	NOTES	NOTES		
MODEL	PER PLANE	NEXT ASSEMBLY	SUPERSEDES	SUP. BY

PIPER AIRCRAFT CORP.
LOCK HAVEN, PENNA.

PART NO.	NO. REQ.	SIZE	DESCRIPTION / MATERIAL
		.062 × 7/8 × 2 13/16	STAINLESS STEEL, TYPE 302 ANNEALED, 2D FINISH

SCALE FULL SIZE — TOTAL WT.—LBS.
FINISH—PIPER SPECIFICATION #10
MANUFACTURING PRACTICES—PIPER SPECIFICATION #9

FITTING — TYPE 2
DRAG WIRE PULL

DRAFTSMAN	CHECKER	STANDARDS
I.D.B. 1-23-46	E.E.T. 1-24-46	

10171

4-11

A411

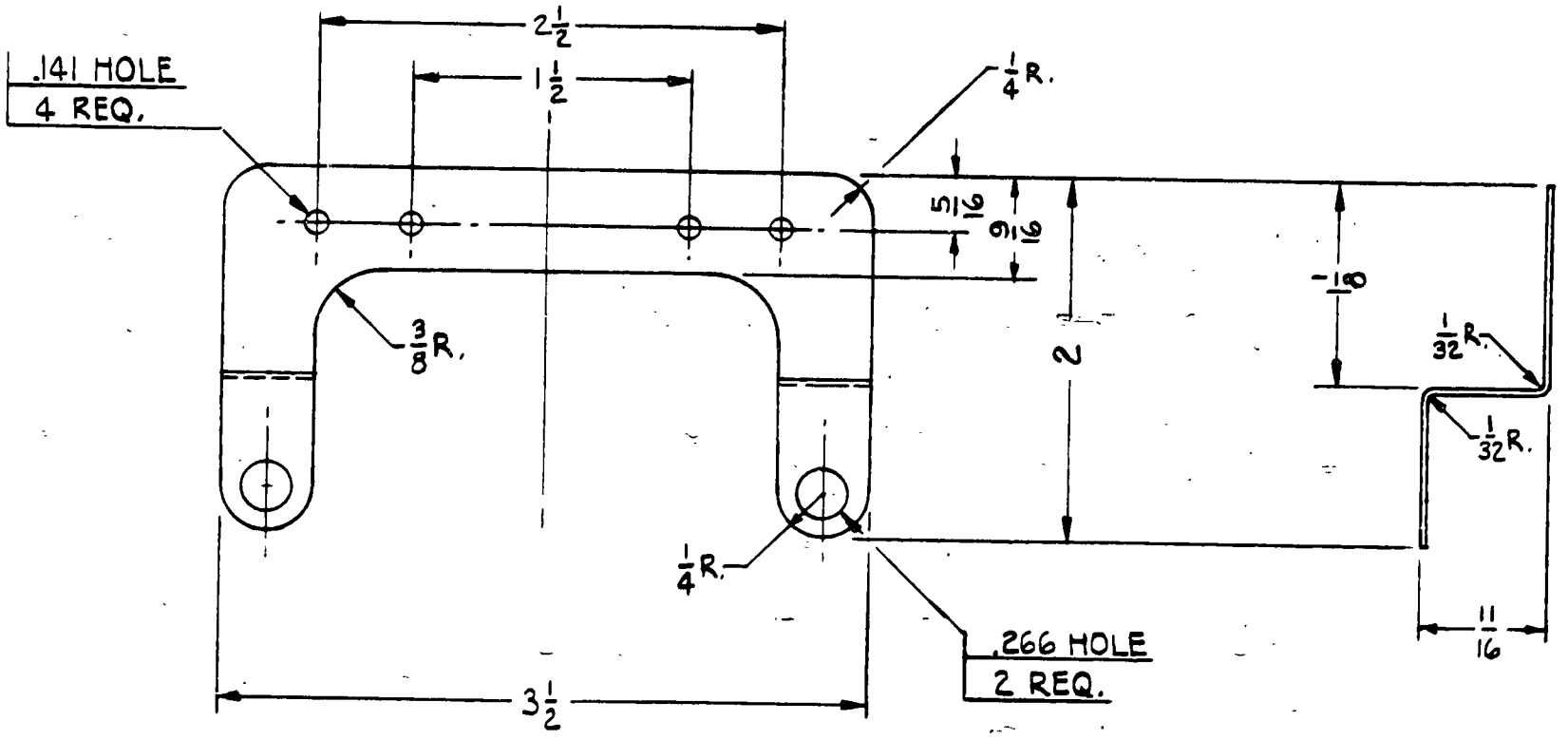

		.032 x 2¾ x 3½	#1025 STEEL
PART No.	No. REQ.	SIZE	DESCRIPTION
		MATERIAL	
SCALE FULL SIZE		TOTAL WT.–LBS.	

FINISH—PIPER SPECIFICATION #10

MANUFACTURING PRACTICES—PIPER SPECIFICATION #9

BRACKET - REAR BAFFLE

LET.	REVISION	DATE	BY.

THIS DRAWING IS THE PROPERTY OF THE PIPER AIRCRAFT CORP. AND ITS POSSESSION BY UNAUTHORIZED PERSONS SHALL NOT BE CONSTRUED AS PERMISSION TO REPRODUCE FOR SALE, IN WHOLE OR IN PART, ANY DEVICES SHOWN THEREON.

MODEL	PER PLANE	NEXT ASSEMBLY	SUPERSEDES	SUP. BY
J5C	1	74965		

PIPER AIRCRAFT CORP.
LOCK HAVEN, PENNA.

DRAFTSMAN	CHECKER	STANDARDS
AL HENRY 10·12·45	C·R·D 10·12·45	

10175

PENCILTEX A. & B. SMITH CO., PGH., PA.

A9

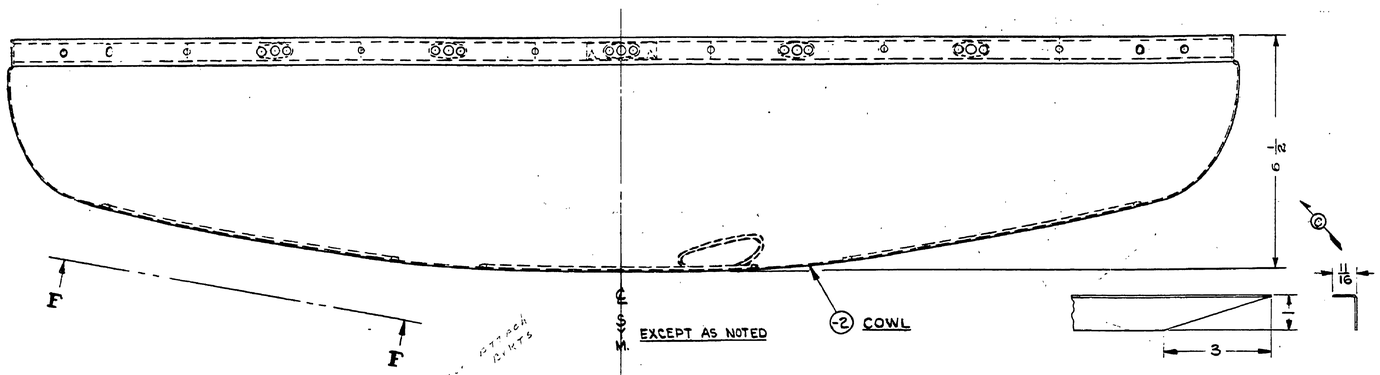

FIG. 1
END DETAIL OF -5
BEFORE FORMING

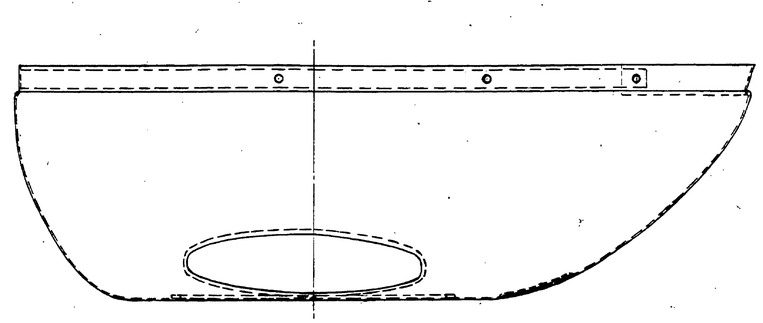

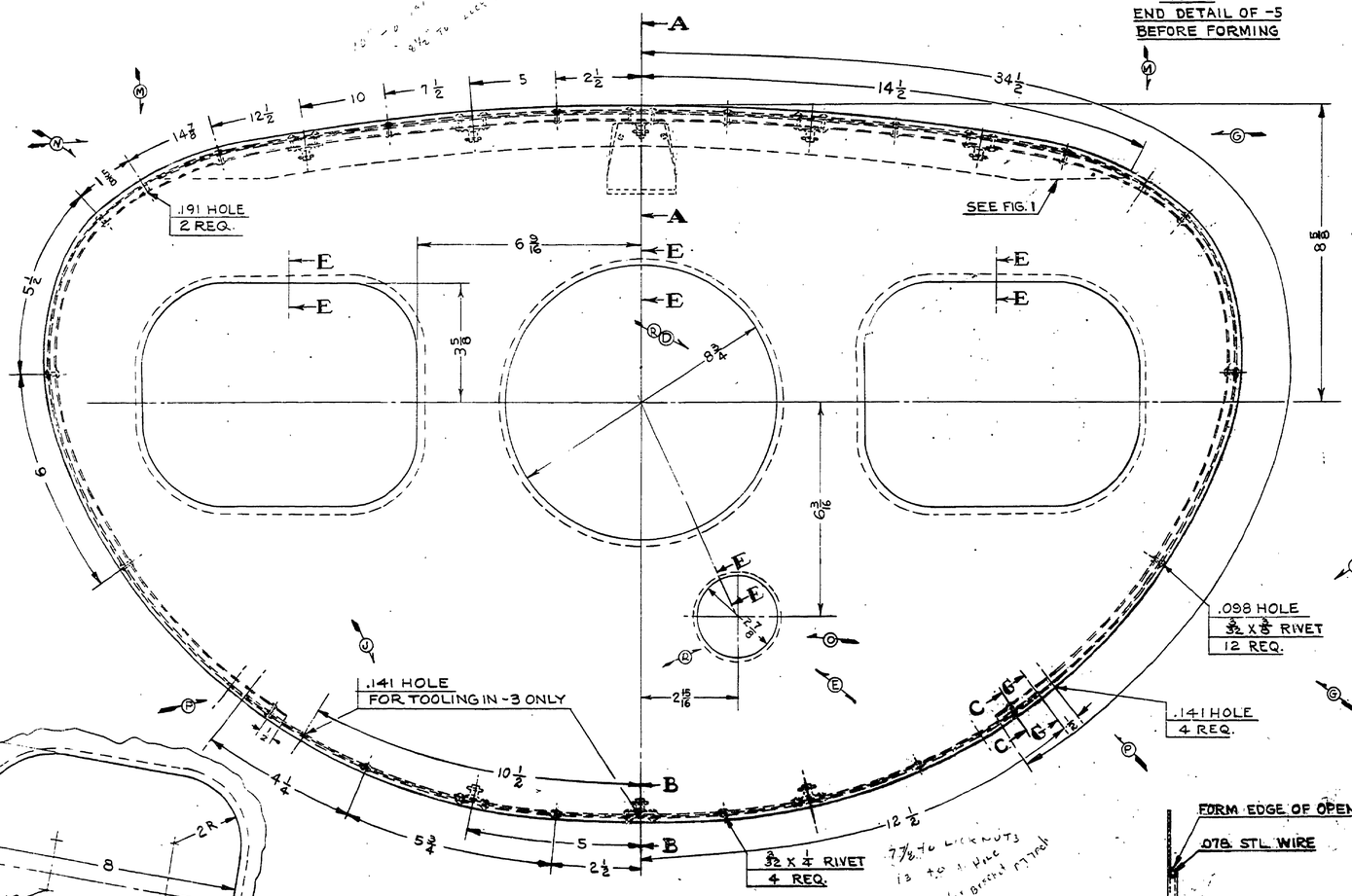

VIEW F-F

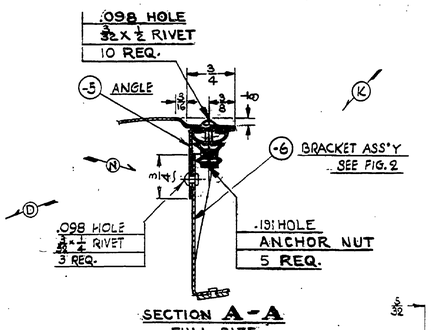

SECTION A-A
FULL SIZE

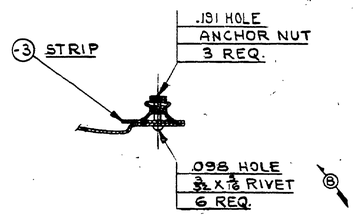

SECTION B-B
FULL SIZE

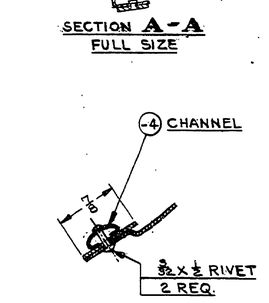

SECTION C-C
FULL SIZE

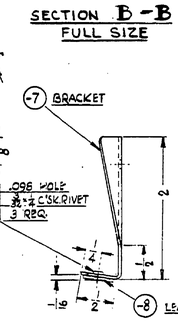

FIG. 2
DETAIL OF -6 (BRACKET ASS'Y)

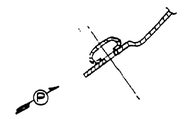

SECTION G-G
FULL SIZE

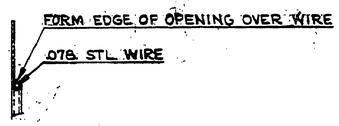

SECTION E-E
FULL SIZE
TYPICAL BEAD

NOTE:
FOR NOSE COWL CONTOUR SEE DWG. NO. 10192

	3	3/32 X 1/4 LG	2S-O ALUM. CSK. HD. RIVETS
-8	1	1/16 X 7/16 X 1 1/8	LEATHER
-7	1	.032 X 2 X 2 1/2	9S 1/2 H ALUM.
-6	1	SUBASSY	CONSISTS OF -7, -8 AND 3 3/32 CSK HD RIVETS
84521		CHANNEL SECTION	
	6	3/32 X 3/8 LG.	2S-O ALUM. BR. HD. RIVETS
	8	ANCHOR NUT #W2SE 1032	PALNUT + BOOTH AIRCRAFT NUT CORP.
	1	.078 DIA. X 84 L.	#1010 C.F. STL. WIRE
	12	3/32 X 1/2 LG.	2S-O ALUM. BR HD RIVETS
	12	3/32 X 3/8 LG.	
	7	3/32 X 1/8 LG.	
10192		NOSE COWL CONTOUR	
-5	1	.032 X 1 1/16 X 29	3S-1/2 H ALUM.
-4	1	69 LONG	PIPER SECT. 84521
-3	1	.040 X 3 1/16 X 25	52S-1/2 H ALUM.
-2	1	.040 X 34 X 44	3S-O ALUM.
PART NO.	NO. REQ.	SIZE	DESCRIPTION
		MATERIAL	

SCALE 6"=1'-0" UNLESS NOTED — TOTAL WT.—LBS.
FINISH—PIPER SPECIFICATION #10
MANUFACTURING PRACTICES—PIPER SPECIFICATION #9

R	8 5/16 WAS 8 & 8 7/16 WAS 2 3/8	9-3-47	RC	
Q	INSEC. A-A & B-B DIMPLES REM.	11-13-46	MHZ	
P	4-.141 HOLES, SEC. G-G ADD	8-26-46	I.M.	
O	2 3/8 DIA. WAS 2 x 2 3/8 HOLE	8-26-46	I.M.	
N	14 7/8 WAS 15; 1 7/8 WAS 1 1/2, 3 WAS 5	7-19-46	C.E.W.	
M	2 ANCHOR NUTS 54.5, 1 1/4 ONES	7-19-46	C.E.W.	
L	USE NO. 10695	6-26-46	RC	
K	-7, -8 AND SUBASSY ADDED	6-6-46	R.C.	
J	.141 HOLES ADDED IN -3 ONLY	5-24-46	C.E.W.	
H	.098 HOLE REF. ADDED	5-14-46	C.E.W.	
G	6 3/16 & 9 RIVETS ADDED.	5-1-46	C.E.W.	
F	10338-14 REMOVED	3-8-46	C.E.W.	
E	VIEWS REVISED	2-5-46	R.C.	
D	8 1/2 WAS 7 3/4 & B WAS 7 3/8	12-5-45	R.C.	
C	6 1/4 DIM. ADDED	2-19-45	MHZ	
B	10338-14 ADDED	12-5-45	I.M.	
A	10338-13 ADDED & -12 & -13 REM.	12-5-45	I.M.	
EST.	REVISION	CHECK	DR	

THIS DRAWING IS THE PROPERTY OF THE PIPER AIRCRAFT CORP. AND ITS POSSESSION BY UNAUTHORIZED PERSONS SHALL NOT BE CONSTRUED AS PERMISSION TO REPRODUCE FOR SALE, IN WHOLE OR IN PART, ANY DEVICES SHOWN THEREON.

MODEL	PER PLANE	NEXT ASSEMBLY	SUPERSEDES	SUP. BY
		10338	10-5005	

PIPER AIRCRAFT CORP.
LOCK HAVEN, PENNA.

DATE	BY
10-24-45	10-24-45
DRAFTSMAN	CHECKER

STANDARDS

COWL ASSEMBLY-ENGINE NOSE

10189

A833

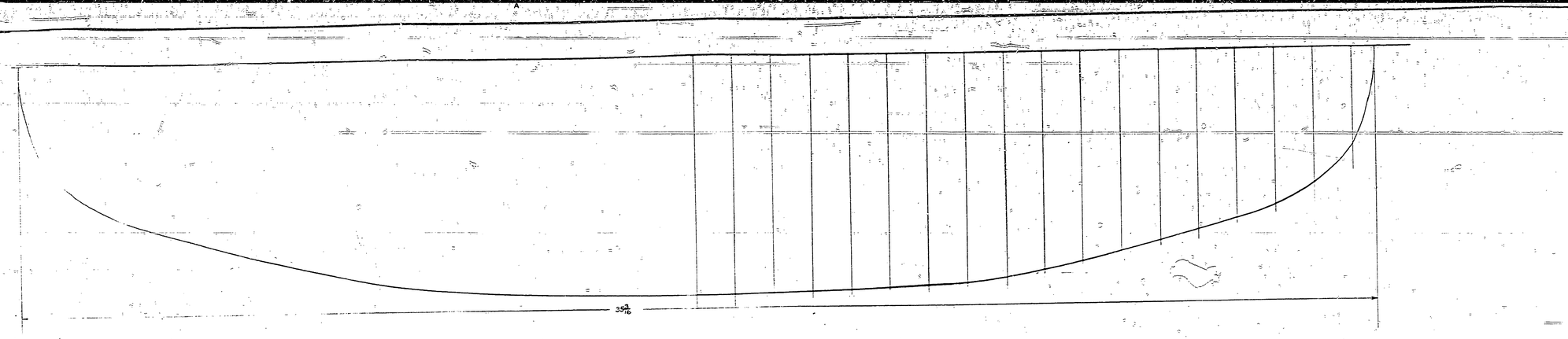
A
35 3/16

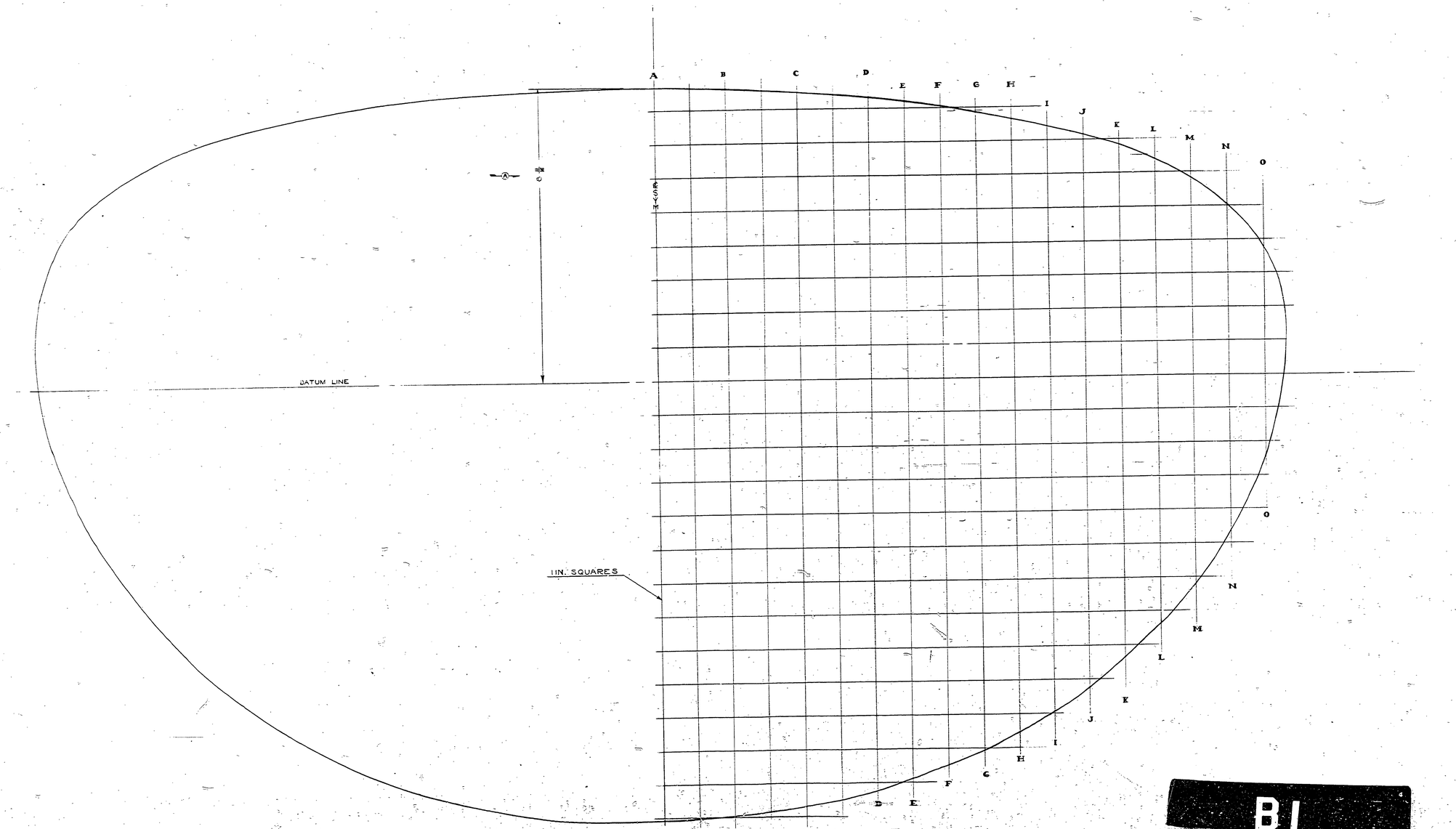
A
B
C
D
E
F
G
H
I
J
K
L
M
N
O
DATUM LINE
11IN. SQUARES

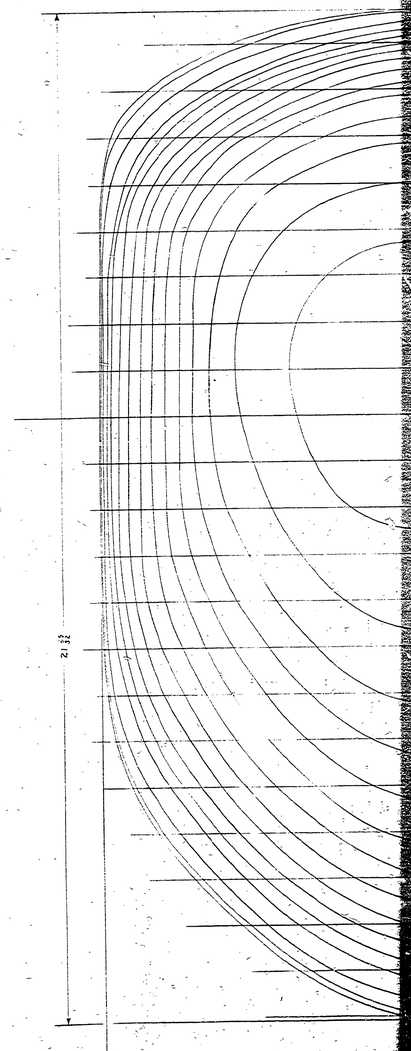
21 5/32
6 3/16

B1

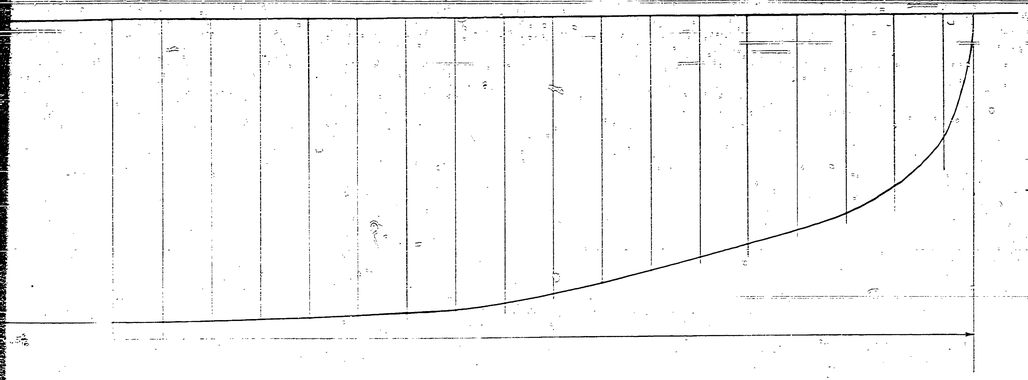

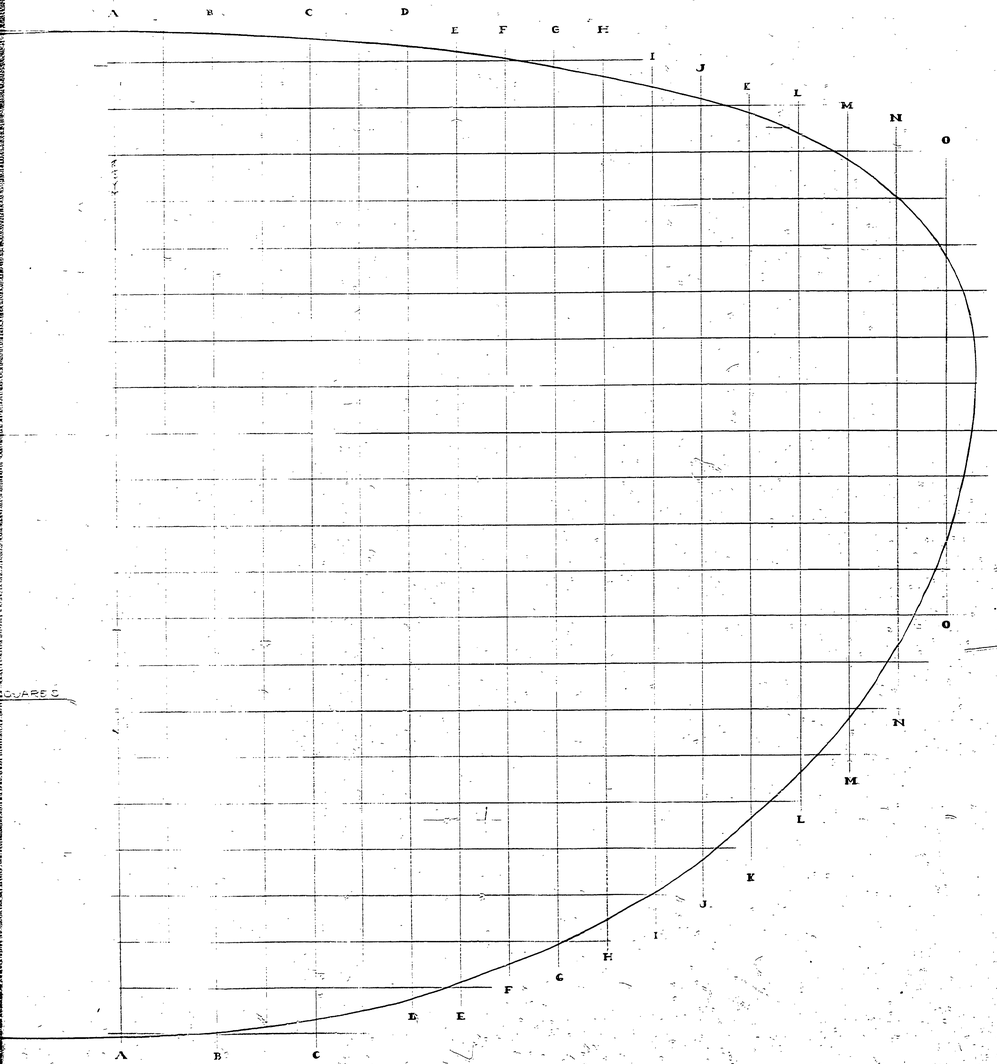

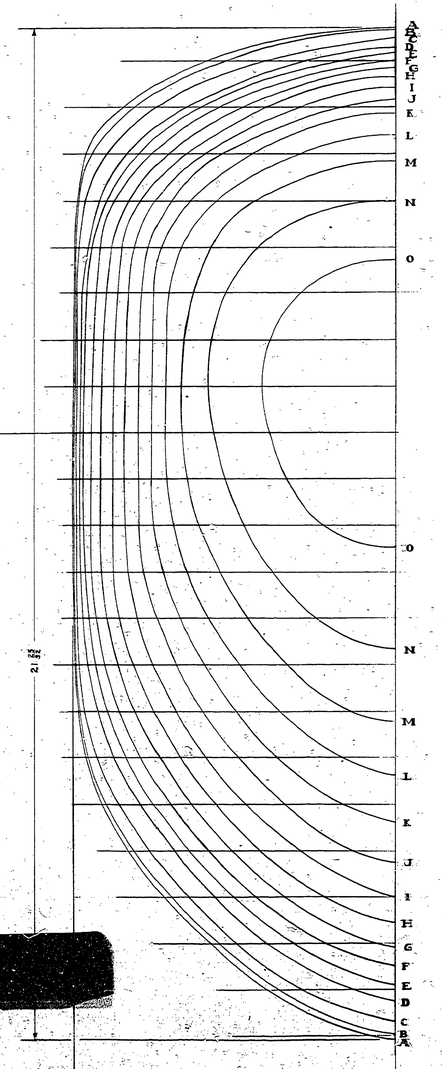

B1

"This drawing is the property of the Piper Aircraft Corp. and its possession by unauthorized persons shall not be construed as permission to reproduce for sale, in whole or in part, any devices shown thereon."

PART NO.	REQ.	MATERIAL
SCALE FULL SIZE		TOTAL WT.—LBS.

FINISH—PIPER SPECIFICATION #10
MANUFACTURING PRACTICES—PIPER SPECIFICATION #9

CONTOUR-ENGINE NOSE COWL

LET.	REVISION	DATE	BY
A	AIL DIM. WAS 7	3-4-40	

MODEL	PER PLANE	NEXT ASSEMBLY	SUPERSEDES	REP. BY

PIPER AIRCRAFT CORP.
LOCK HAVEN, PENNA.

DRAFTSMAN: 10-25-40 | CHECKER: 10-25-40 | STANDARD:

10192

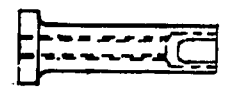

ACTUAL SIZE

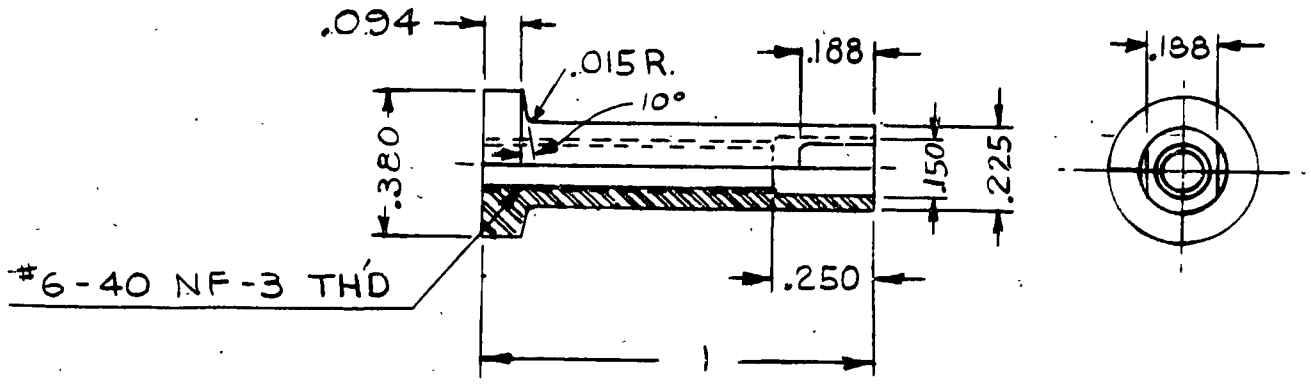

THIS DRAWING IS THE PROPERTY OF THE PIPER AIRCRAFT CORP. AND ITS POSSESSION BY UNAUTHORIZED PERSONS SHALL NOT BE CONSTRUED AS PERMISSION TO REPRODUCE FOR SALE, IN WHOLE OR IN PART, ANY DEVICES SHOWN THEREON.

MODEL	PER PLANE	NEXT ASSEMBLY	SUPERSEDES	SUP. BY
J5C	8	10720; 10721		
J3	32	12953; 13013		
		12872; 12921		
		10707; 10709		
		10705; 10706		

LET.	REVISION	DATE	BY
N	REDRAWN & REVISED	8-28-46	C.E.K.

PIPER AIRCRAFT CORP.
LOCK HAVEN, PENNA.

PART No.	No. REQ.	SIZE	DESCRIPTION
		.380 DIA. x 1	C.R.STL. CADMIUM PLATED
		MATERIAL	

SCALE TWICE SIZE & NOTED — TOTAL WT.—LBS.

FINISH—PIPER SPECIFICATION #10

MANUFACTURING PRACTICES—PIPER SPECIFICATION #9

NIPPLE - #6-40 TIE ROD

DRAFTSMAN	CHECKER	STANDARDS
C.E.K. 8-28-46	E.E.T. 8-29-46	

10201

PENCILTEX A. & B. SMITH CO., PGH., PA.

A10

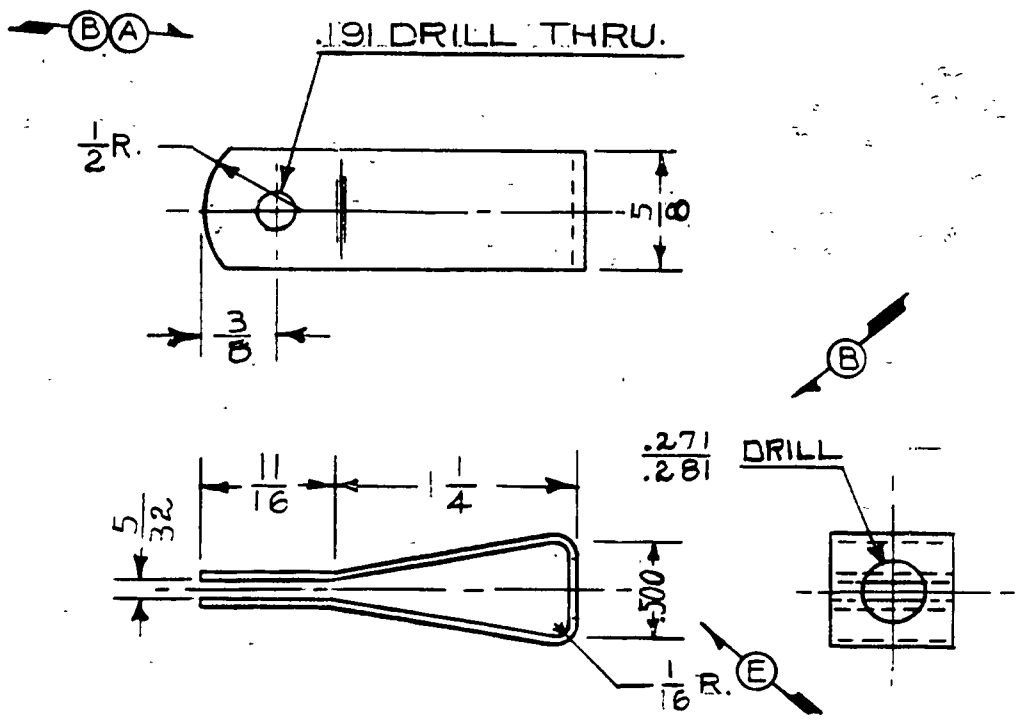

LIMITS, SHOP PRACTICES AND FINISH, UNLESS OTHERWISE NOTED, TO BE IN ACCORDANCE WITH PIPER SPECIFICATIONS #9 AND #10.

PART No.	No. REQ.	SIZE	DESCRIPTION
		.045 x 5/8 x 4 3/8	#1025 STEEL

MATERIAL

SCALE FULL SIZE | TOTAL WT.-LBS.

FINISH

LET.	REVISION	DATE	BY
K	J5C N.A. 10720 & 10721 WERE 14766	6-20-46	R3C
J	J3 N.A. 10705, 10706, 10707 & 10709 WERE 15556	6-19-46	B.C.
H	J5C N.A. 16355 REMOVED	11-29-45	E.L.N.
G	L-14 MODEL REF. ADDED	3-15-45	I.M.M.
F	REDRAWN WITHOUT CHANGE	6-2-44	I.D.B.
E	.500 WAS 1/2	2-11-44	V.C.
D	J5C NEXT ASSYS. 16355 & 14766 WERE 10412	11-22-43	R.E.T.
C	J3 MODEL REF. ADDED	10-29-43	R.E.T.
B	DIMENSIONS REVISED	9-1-43	C.E.K.
A	PILOT HOLE ADDED	12-30-41	V.F.

MODEL	PER SHIP	NEXT ASSEMBLY	SUPERSEDES	SUP. BY
L-14	8	90405, 90404		
J3	32	10705, 10706, 10707, 10709		
HE-1, J5D	8	10412		
J5, J4	8	10412		
J5C	8	10720, 10721	D131-A	

PIPER AIRCRAFT CORP.
LOCK HAVEN, PENNA.

CLEVIS – TIE ROD

DRAWN	CHECKED	APPROVED
M.H. 10-25-40	M.D.L. 1-6-41	

10221

H

H

A11

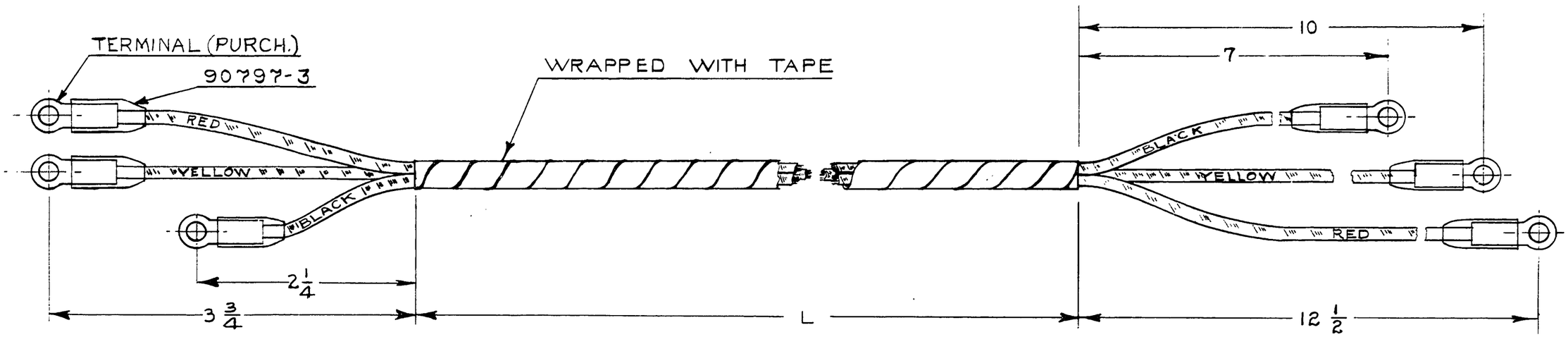

NOTE:

(D) #18 GA. CONDUCTOR (AUTOMOTIVE CONSTRUCTION) TERMINALS TO ACCOMODATE #10-32 STUDS INSULATED SLEEVES APPROXIMATELY AS SHOWN.

PART NO.	L	MODEL	PER PLANE	NEXT ASSY.
10289	62	J3	1	83952
10289-2	46¼			

	1	½ x 160	TAPE
	1	#18GA. x NOTED	CONDUCTOR (AUTOMOTIVE CONSTRUCTION)
	1	#18GA. x NOTED	
	1	#18GA x NOTED	
	6	TERMINAL #30997 PURCH. AIRCRAFT-MARINE PRODUCTS INC. OR EQUIVALENT	
90797-3	6	SLEEVE	
PART No.	No. REQ.	SIZE	DESCRIPTION MATERIAL

THIS DRAWING IS THE PROPERTY OF THE PIPER AIRCRAFT CORP. AND ITS POSSESSION BY UNAUTHORIZED PERSONS SHALL NOT BE CONSTRUED AS PERMISSION TO REPRODUCE FOR SALE, IN WHOLE OR IN PART, ANY DEVICES SHOWN THEREON.

LET.	REVISION	DATE	BY
D	18 GA. WAS 16 GA.	5-21-47	H.R.K.
C	RE-DRAWN & REVISED	7-26-46	L.D.B.

MODEL	PER PLANE	NEXT ASSEMBLY	SUPERSEDES	SUP. BY

PIPER AIRCRAFT CORP.
LOCK HAVEN, PENNA.

SCALE FULL SIZE — TOTAL WT.—LBS.

FINISH—PIPER SPECIFICATION #10

MANUFACTURING PRACTICES—PIPER SPECIFICATION #9

WIRE ASSEMBLY-IGNITION

I.D.B.	E.E.T.	
7-26-46	7-26-46	
DRAFTSMAN	CHECKER	STANDARDS

10289

4.12

A412

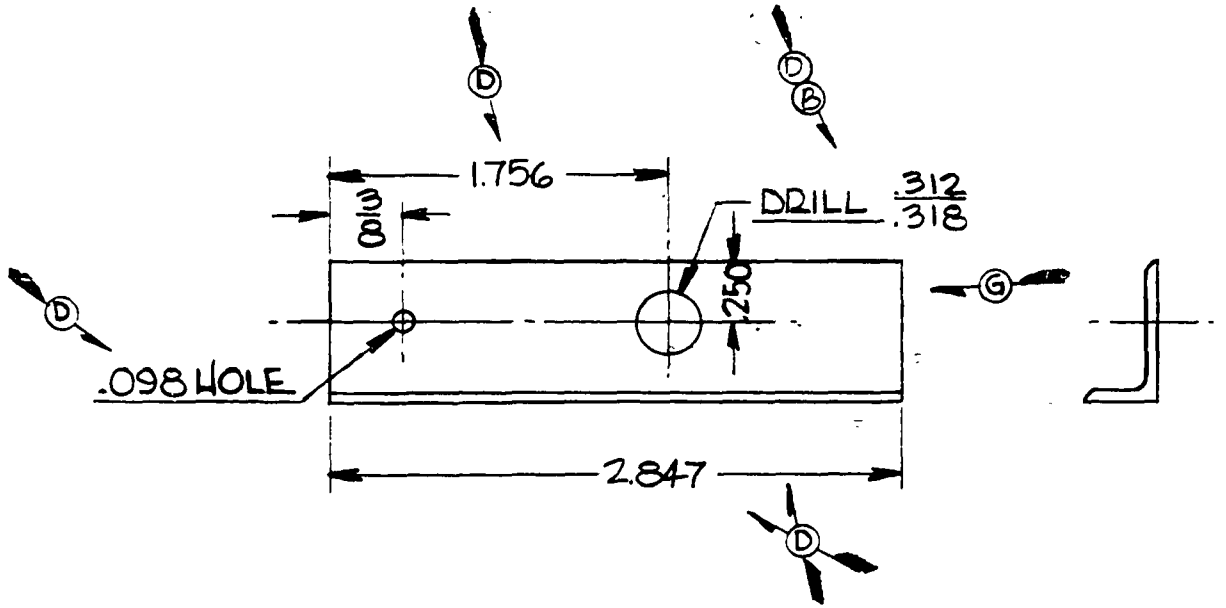

USED ON METAL SPAR WING ONLY

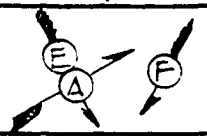

LET	REVISION	DATE	BY
H	REDRAWN WITHOUT CHANGE	6-12-51	M.G.
G	.250 WAS .313	3-5-46	E.L.N.
F	L-14 MODEL REF. ADDED	3-16-45	I.M.M.
E	J3 MODEL REF. ADDED	10-28-43	I.D.B.
D	DIM'S. REV. .098 HOLE ADDED	8-11-43	C.E.K.
C	SPEC. REV. TO INCLUDE 84921	8-11-43	C.E.K.
B	313+.002 -.001 WAS 5/16 DRILL	2-19-43	R.R.F.
A	J5C, J5D & NOTE ADDED	2-16-43	H.R.K.

MODEL	PER PLANE	NEXT ASSEMBLY	SUPERSEDES	SUP. BY
~~L-14~~	~~6~~	90405, 90404		
~~J3~~	~~4~~	15556		
J5D	10	14903, 14766		
J5C	10	14903, 14766		
J4	10	10352		

THIS DRAWING IS THE PROPERTY OF THE PIPER AIRCRAFT CORP. AND ITS POSSESSION BY UNAUTHORIZED PERSONS SHALL NOT BE CONSTRUED AS PERMISSION TO REPRODUCE FOR SALE IN WHOLE OR IN PART ANY DEVICES SHOWN THEREON.

PIPER AIRCRAFT CORP.
LOCK HAVEN, PENNA.

PART NO.	NO. REQ.	MATERIAL
84921	DWG. REF. ONLY	ANGLE SECTION
		2⅞ LONG PIPER SECTION 84921
	SIZE	DESCRIPTION

SCALE. FULL SIZE | TOTAL WT.—LBS.

FINISH—PIPER SPECIFICATION # 10

MANUFACTURING PRACTICES—PIPER SPECIFICATION # 9

ANGLE—REAR SPAR

DRAFTSMAN	CHECKER	STANDARDS
R.C.M. 8-7-41	R.R.B. 8-7-41	

10291

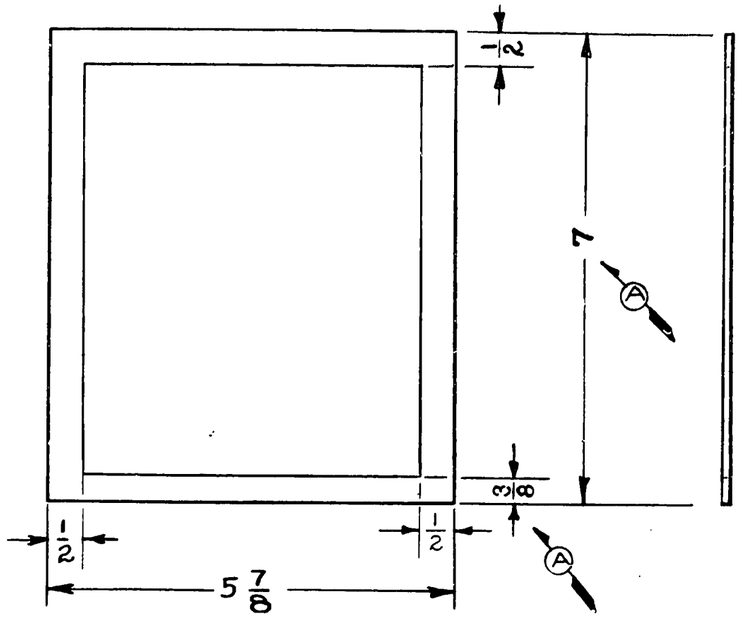

THIS DRAWING IS THE PROPERTY OF THE PIPER AIRCRAFT CORP. AND ITS POSSESSION BY UNAUTHORIZED PERSONS SHALL NOT BE CONSTRUED AS PERMISSION TO REPRODUCE FOR SALE, IN WHOLE OR IN PART, ANY DEVICES SHOWN THEREON

LET.	REVISION	DATE	BY
C	J3 MODEL REF. ADDED	6-7-46	RSC
B	TOP CORNERS SQUARED	1-24-46	I.M.M.
A	7 DIM. WAS 7 1/8; 3/8 DIM. WAS 1/2	1-24-46	I.M.M.

MODEL	PER PLANE	NEXT ASSEMBLY	SUPERSEDES	SUP. BY
J3	2	24165		
J50	2	24135		

PIPER AIRCRAFT CORP.
LOCK HAVEN, PENNA.

PART No.	No. REQ.	SIZE	DESCRIPTION
		.050x5 7/8x7	PYRALIN
		MATERIAL	

SCALE 6 IN. = 1 FT. | TOTAL WT.–LBS.

FINISH–PIPER SPECIFICATION #10

MANUFACTURING PRACTICES–PIPER SPECIFICATION #9

GROMMET

I.D.B.	C.E.T.		
12-20-45	12-20-45		
DRAFTSMAN	CHECKER	STANDARDS	10292

413

A413

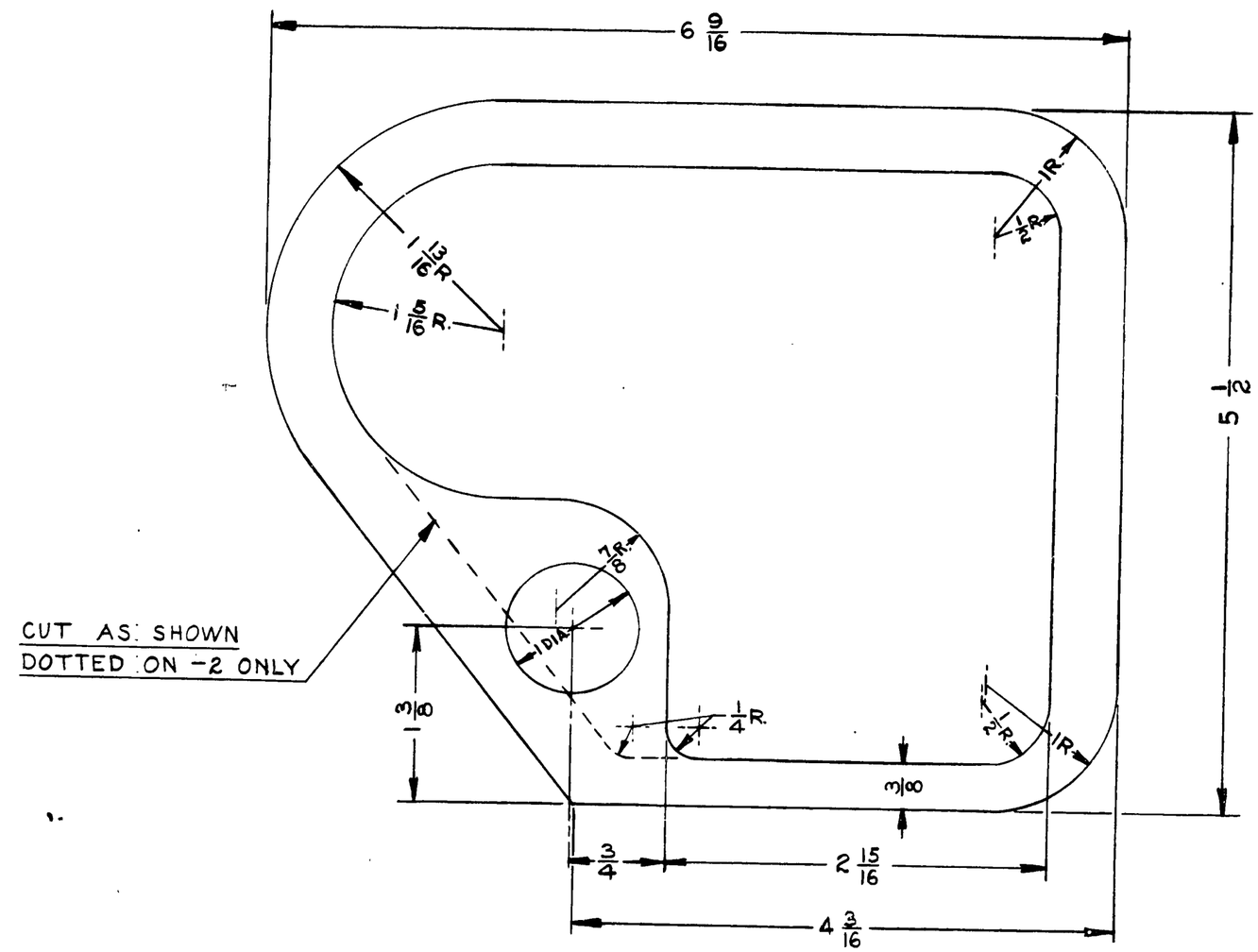



10293 SHOWN
10293-2 NOTED

THIS DRAWING IS THE PROPERTY OF THE PIPER AIRCRAFT CORP. AND ITS POSSESSION BY UNAUTHORIZED PERSONS SHALL NOT BE CONSTRUED AS PERMISSION TO REPRODUCE FOR SALE, IN WHOLE OR IN PART, ANY DEVICES SHOWN THEREON

LET.	REVISION	DATE	BY
C	-2 ADDED	12-13-49	C.K.
B	J3 MODEL REF. ADDED	6-7-46	R3C
A.	REDRAWN & REVISED	1-25-46	DAW

MODEL	PER PLANE	NEXT ASSEMBLY	SUPERSEDES	SUP. BY
J3	2	24165		
J5C	2	24195		

PIPER AIRCRAFT CORP.
LOCK HAVEN, PENNA.

PART No.	NO. REQ.	SIZE	DESCRIPTION
		.050 × 5½ × 6 9/16	PYRALIN
			MATERIAL

SCALE — TOTAL WT.—LBS.

FINISH—PIPER SPECIFICATION #10

MANUFACTURING PRACTICES—PIPER SPECIFICATION #9

GROMMET

D. A. W.	[illegible]		10[illegible]
1-25-46	1-25-46		
DRAFTSMAN	CHECKER	STANDARDS	

414

A414

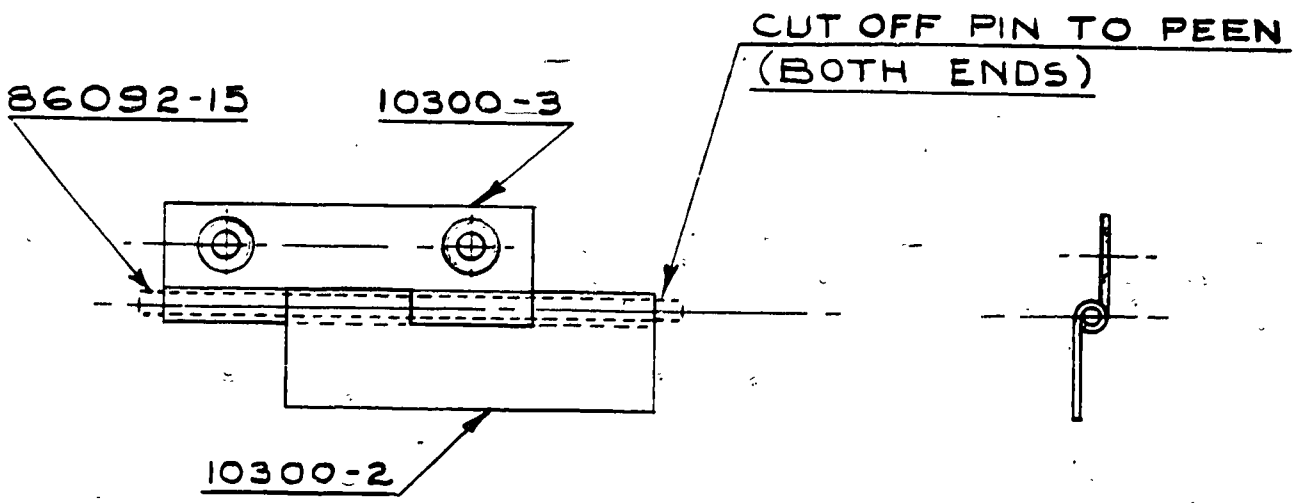

PART No.	No. REQ.	NAME / MATERIAL
86092-15	1	PIN
10300-3	1	HINGE
10300-2	1	HINGE

SCALE FULL SIZE | TOTAL WT.—LBS.

FINISH—PIPER SPECIFICATION #10

MANUFACTURING PRACTICES—PIPER SPECIFICATION #9

HINGE ASSEMBLY

THIS DRAWING IS THE PROPERTY OF THE PIPER AIRCRAFT CORP. AND ITS POSSESSION BY UNAUTHORIZED PERSONS SHALL NOT BE CONSTRUED AS PERMISSION TO REPRODUCE FOR SALE, IN WHOLE OR IN PART, ANY DEVICES SHOWN THEREON.

MODEL	PER PLANE	NEXT ASSEMBLY	SUPERSEDES	SUP. BY
J3	2	10050		

LET.	REVISION	DATE	BY

PIPER AIRCRAFT CORP.
LOCK HAVEN, PENNA.

DRAFTSMAN	CHECKER	STANDARDS
I.D.B. 12-11-45	R.E.T. 12-12-45	

10302

PENCILTEX A. & B. SMITH CO., PGH., PA.

A14

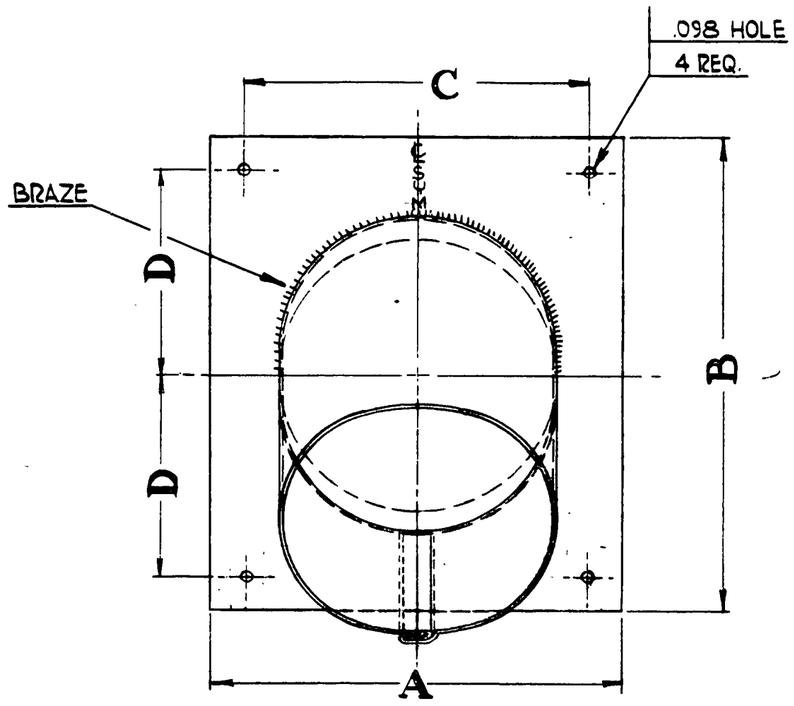

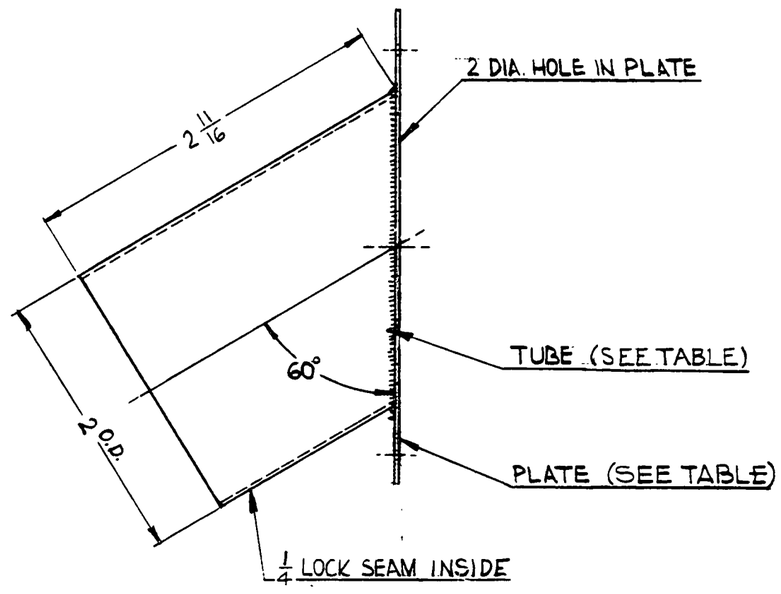

PART NO.	PLATE NO.	A	B	C	D	TUBE NO.
10400	10400-2	3	3 1/2	2 1/2	1 1/2	10400-3
10400-4	10400-5	2 11/16	2 9/16	2 3/16	1 1/32	10400-3
10400-6	10400-7	2 11/16	2 9/16	2 3/16	1 1/32	12375-8

12375-8	1	TUBE	
-3		.032×2 11/16×7	3S-1/2 H. ALUM.
-7	1	.020×2 9/16×2 11/16	H. R. STEEL
-5		.032×2 9/16×2 11/16	3S-1/2 H. ALUM
-2		.032×3×3 1/2	3S-1/2 H. ALUM.
PART NO.	NO. REQ.	SIZE	DESCRIPTION / MATERIAL

SCALE FULL SIZE — TOTAL WT.—LBS.

FINISH—PIPER SPECIFICATION #10

MANUFACTURING PRACTICES—PIPER SPECIFICATION #9

THIS DRAWING IS THE PROPERTY OF THE PIPER AIRCRAFT CORP. AND ITS POSSESSION BY UNAUTHORIZED PERSONS SHALL NOT BE CONSTRUED AS PERMISSION TO REPRODUCE FOR SALE, IN WHOLE OR IN PART, ANY DEVICES SHOWN THEREON

LET.	REVISION	DATE	BY
D	LOCK SEAM LOCATION "INSIDE" ADDED	4-19-51	HRK
C	-6, -7, 12375-8 & "TUBE NO." COL. ADDED	12-5-49	K.D.
B	1 1/32 WAS 1 1/32 FOR -4	11-17-48	RC
A	TABLE ADDED	10-14-47	RC

J.S.C. — 10469

MODEL	PER PLANE	NEXT ASSEMBLY	SUPERSEDES	SUP. BY

PIPER AIRCRAFT CORP.
LOCK HAVEN, PENNA.

TAKE OFF ASSEMBLY — AIR

DRAFTSMAN	CHECKER	STANDARDS
L.R. 12-28-45	E.E.T. 1-2-45	

10400

A415

REDRAWN ORIGINAL DATED 10-2-40

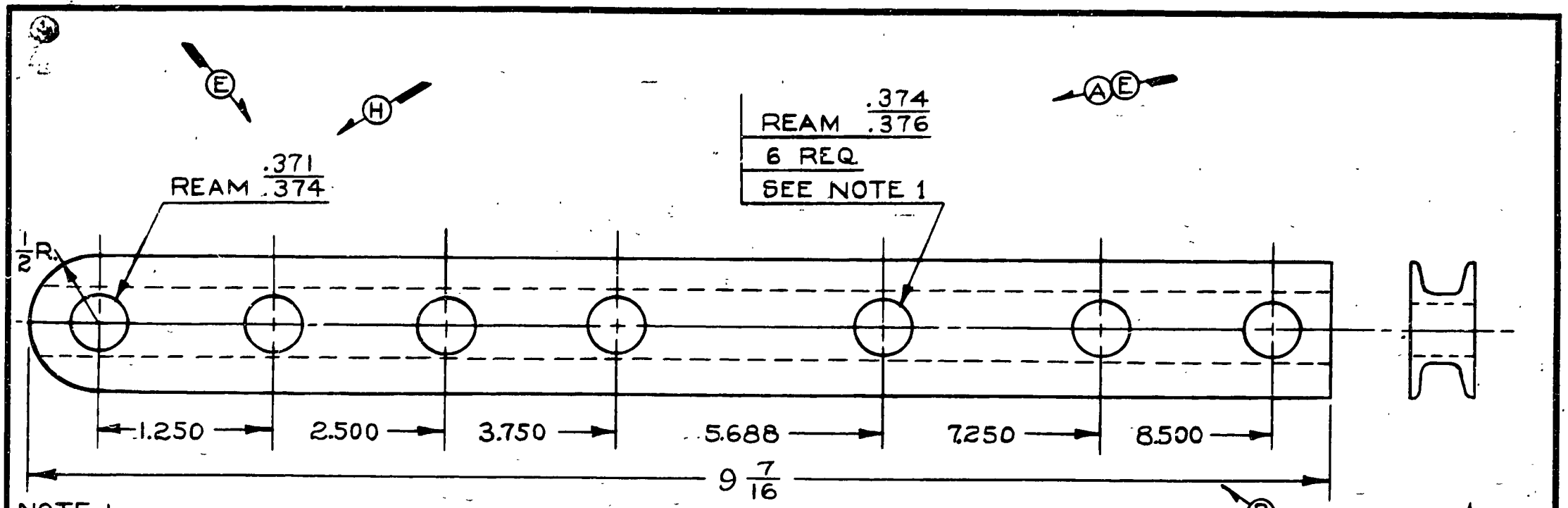

NOTE 1.

HOLES WHERE "SEE NOTE 1" IS INDICATED TO MATCH MATING PARTS.

LET.	REVISION	DATE	BY
L	NOTE 1 REVISED	3-15-45	I.D.B.
K	L-14 MODEL REF. ADDED	3-15-45	I.D.B.
J	REDRAWN WITHOUT CHANGE	8-25-44	I.M.M.
H	.371 WAS .372 ; .374 WAS .375 ; NOTE REVISED	6-30-44	A.I.N.
G	SPEC. REVISED TO INCLUDE 84931	8-5-43	R.E.T.
F	L-4B, TG-8 REF. REMOVED	6-16-43	C.K.
E	DIMS. REVISED & NOTE 1. ADDED	6-16-43	C.K.
D	NOTE ADDED	2-9-43	M.G.S.
C	J5C, J5D ADDED	2-16-43	H.R.K.
B	DECIMALS WERE FRACTIONS	10-28-42	C.L.W.
A	.375 +.002 -.001 WAS 3/8	4-25-41	R.R.B.

MODEL	PER PLANE	NEXT ASSEMBLY	SUPERSEDES	SUP. BY
L-14	4	30405, 30404		
J5D	4	14845		
J5C	4	14845		
L-4A	4	14802		
J3	4	14202		
J4	4	10582	D1120-B	

PENCILTEX A. & P. SMITH CO., PGH., PA.

PIPER AIRCRAFT CORP.
LOCK HAVEN, PENNA.

84931	DWG. REF. ONLY	FILLER BLOCK SECTION
		9 7/16 LONG — PIPER SECT. 84931
R.H. / L.H.	No. REQ.	SIZE — DESCRIPTION
PART No.		MATERIAL
SCALE FULL SIZE		TOTAL WT. — LBS.
FINISH—PIPER SPECIFICATION #10		
MANUFACTURING PRACTICES—PIPER SPECIFICATION #9		

FITTING — FRONT SPAR BUTT HINGE

V.F.	J.B.	
4-2-41	4-8-41	
DRAFTSMAN	CHECKER	STANDARDS

10401

FOR METAL SPAR WING

A15

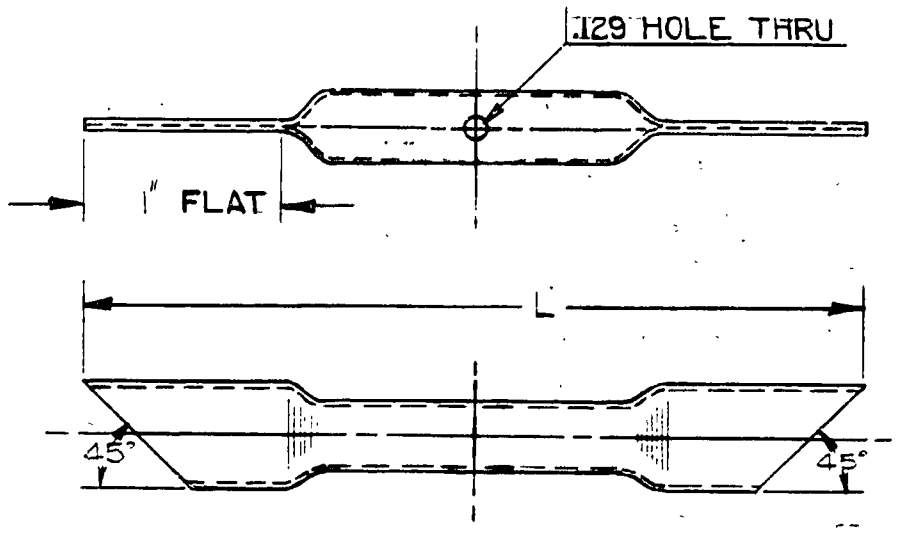

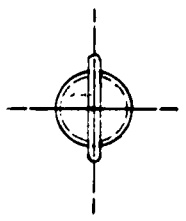

PART NO.	L	MODEL	PER PLANE	NEXT ASSEMBLY
10415-2	3	J5C	2	74965
10415-3	6	J5C	2	74965

LET.	REVISION	DATE	BY

THIS DRAWING IS THE PROPERTY OF THE PIPER AIRCRAFT CORP. AND ITS POSSESSION BY UNAUTHORIZED PERSONS SHALL NOT BE CONSTRUED AS PERMISSION TO REPRODUCE FOR SALE, IN WHOLE OR IN PART, ANY DEVICES SHOWN THEREON.

MODEL	PER PLANE	NEXT ASSEMBLY	SUPERSEDES	SUP. BY
NOTED	NOTED	NOTED	7734	

PIPER AIRCRAFT CORP.
LOCK HAVEN, PENNA.

PART No.	No. REQ.	SIZE	DESCRIPTION
		3/8 x .028 x NOTED	#1025 STL. TUBE
		MATERIAL	

SCALE FULL SIZE — TOTAL WT.—LBS.

FINISH—PIPER SPECIFICATION #10

MANUFACTURING PRACTICES—PIPER SPECIFICATION #9

SUPPORT — BAFFLE HANGER

DRAFTSMAN	CHECKER	STANDARDS
D.A.W. 1-4-46	E.E.T. 1-7-46	

10415

PENCILTEX A. & B. SMITH CO., PGH., PA.

A16

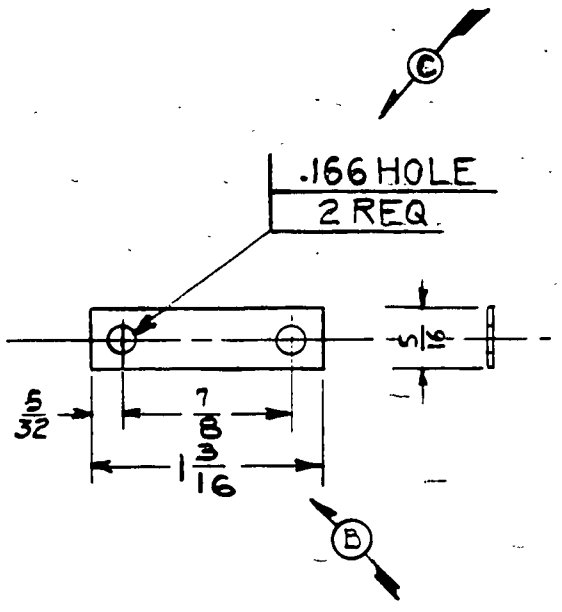

								.032×5/16×1 3/16	3S-1/2 H ALUM.
								SIZE	DESCRIPTION
							PART No.	No. REQ.	MATERIAL
							SCALE		TOTAL WT.—LBS.

FINISH—PIPER SPECIFICATION #10

MANUFACTURING PRACTICES—PIPER SPECIFICATION #9

THIS DRAWING IS THE PROPERTY OF THE PIPER AIRCRAFT CORP. AND ITS POSSESSION BY UNAUTHORIZED PERSONS SHALL NOT BE CONSTRUED AS PERMISSION TO REPRODUCE FOR SALE, IN WHOLE OR IN PART, ANY DEVICES SHOWN THEREON.

LET.	REVISION	DATE	BY
C	.166 HOLE WAS .141	7-28-49	HRK
B	7/8 WAS 3/4; 1 3/16 WAS 1 1/16	10-29-46	I.D.B.
A	NEXT ASS'Y REF. 24186 WAS 10921	2-28-46	C.E.V.

MODEL	PER PLANE	NEXT ASSEMBLY	SUPERSEDES	SUP. BY
J5C	1	24186		

PIPER AIRCRAFT CORP.
LOCK HAVEN, PENNA.

JUMPER-FUSE TERMINAL

DRAFTSMAN	CHECKER	STANDARDS
1-7-46	JSB 1-7-46	

10438

PENCILTEX A. & B. SMITH CO., PGH., PA.

A17

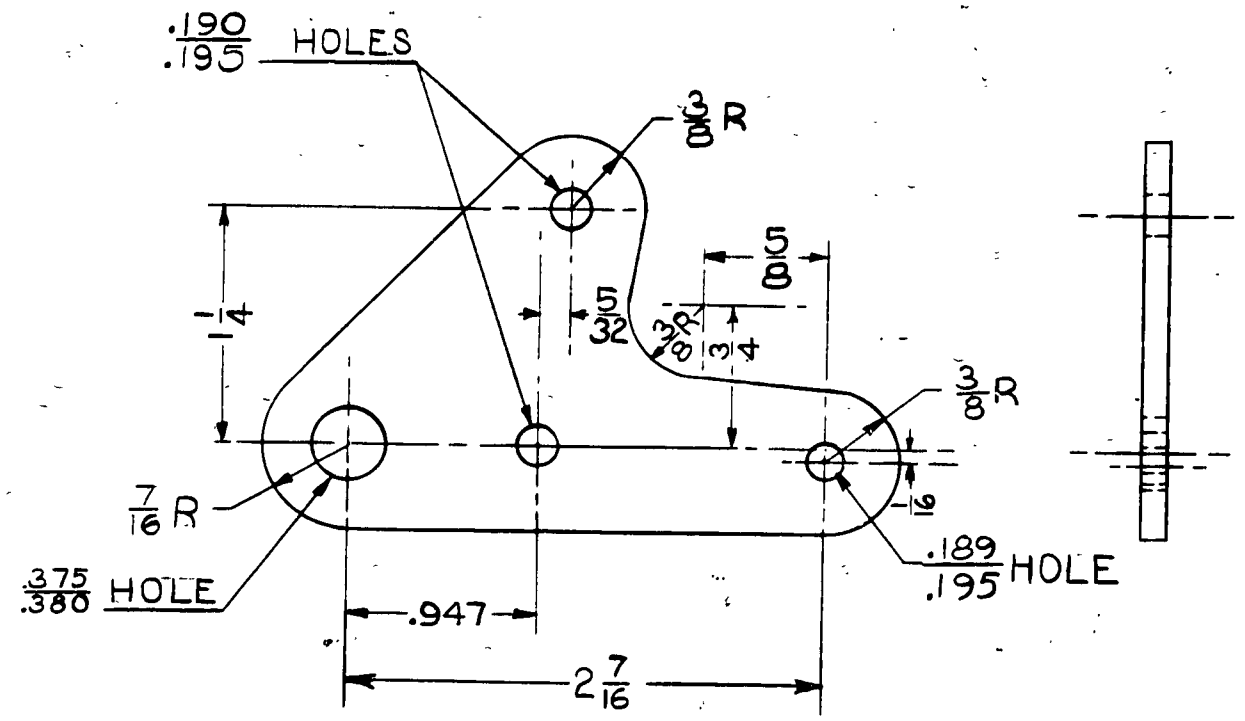

PART No.	No. REQ.	SIZE	DESCRIPTION
		.125 x 2 1/16 x 3 1/4	#1025 STEEL

MATERIAL

SCALE FULL SIZE — TOTAL WT.—LBS.

FINISH—PIPER SPECIFICATION #10

MANUFACTURING PRACTICES—PIPER SPECIFICATION #9

LINK —

ELEVATOR HORN UPPER

MODEL	PER PLANE	NEXT ASSEMBLY	SUPERSEDES	SUP. BY
J5C	1	10450	40351	

PIPER AIRCRAFT CORP.
LOCK HAVEN, PENNA.

DRAFTSMAN	CHECKER	STANDARDS
BBC 1-14-46	R.E.T. 1-15-46	

10449

LET.	REVISION	DATE	BY

THIS DRAWING IS THE PROPERTY OF THE PIPER AIRCRAFT CORP. AND ITS POSSESSION BY UNAUTHORIZED PERSONS SHALL NOT BE CONSTRUED AS PERMISSION TO REPRODUCE FOR SALE, IN WHOLE OR IN PART, ANY DEVICES SHOWN THEREON.

PENCILTEX A. & B. SMITH CO., PGH., PA.

19

A18

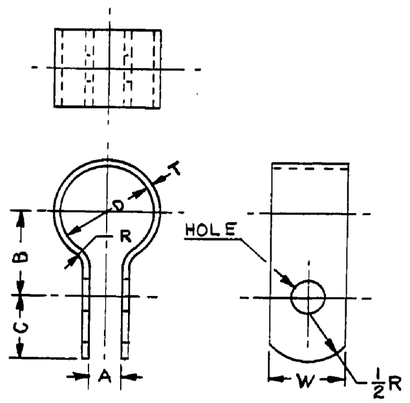

PART NO.	A	B	C	D	R	T	W	HOLE	MATERIAL
10466-2	1/16	13/32	1/4	9/32	1/32	.032	5/8	.141	#1025 STEEL
10466-3	1/16	15/32	1/4	5/16	3/64	.045	1	.191	#1025 STEEL
10466-4	3/32	3/8	3/16	3/8 -0/32	1/32	.032	5/16	.141	#1025 STEEL
10466-5	1/8	13/16	1/4	3/4	1/16	.062	7/8	.191	#1025 STEEL
10466-6	1/4	2 1/4	7/16	3 13/16	3/64	.045	5/8	.191	#1025 STEEL
10466-7	3/16	3/4	3/16	11/16	1/32	.032	3/8	.191	#1025 STEEL
10466-8	1/16	13/32	3/8	1/4 -0/32	1/32	.032	5/8	.191	#1025 STEEL
10466-9	3/4	15/16	3/8	1 1/8	1/16	.062	3/4	.191	#1025 STEEL
10466-10	1/8	11/16	1/4	3/4	3/32	.032	1/2	.166	24 ST ALUM.
10466-11	3/16	1	5/16	1 1/8	1/16	.045	7/8	.191	#1025 STEEL
10466-12	1/8	5/8	1/4	1/2	1/16	.032	1/2	.141	#1025 STEEL
10466-13	1/8	1 7/8	3/8	3 1/16	1/16	.045	5/8	.191	#1025 STEEL
10466-14	1/4	1 1/16	5/16	1/2 -0/32	1/32	.032	3/8	.191	#1025 STEEL
10466-15	—	1	1/2	7/16	3/32	.095	1	.302	#1025 STEEL
10466-16	1/4	1 3/8	3/8	1 1/4	1/16	.062	3/4	.250	#1025 STEEL
10466-17	3/16	1	5/16	1 3/8	1/16	.062	1	.191	#1025 STEEL
10466-18	3/16	15/16	5/16	1 1/4	1/16	.062	1	.191	#1025 STEEL
10466-19	3/16	7/8	5/16	1 1/8	1/16	.062	1	.191	#1025 STEEL
10466-20	1/16	13/32	3/8	7/32	1/32	.032	5/8	.191	#1025 STEEL
10466-21	1/4	1 1/8	1/4	1 3/4	1/16	.045	5/8	.191	#1025 STEEL
10466-22	1/16	5/16	3/16	3/16	1/32	.032	3/8	.141	#1025 STEEL
10466-23	1/16	13/32	3/16	3/16	1/32	.032	5/8	.191	#1025 STEEL
10466-24	1/8	3 5/16	5/16	5 7/8	1/16	.032	5/8	.191	#1025 STEEL

PART NO.	A	B	C	D	R	T	W	HOLE	MATERIAL

PART NO.	A	B	C	D	R	T	W	HOLE	MATERIAL

NOTE:
SEE ALSO DWG. 80002

LET	REVISION	DATE	BY
U	REDRAWN WITHOUT CHANGE	6-4-51	C.K.
T	-24 ADDED	2-14-51	C.K.
S	-22 & -23 ADDED	10-26-50	H.R.K.
R	-21 ADDED	9-14-50	F.C.S.
Q	-20 ADDED	2-1-50	C.K.
P	-17-18-19 ADDED	8-30-49	R.R.
O	-16 ADDED	1-5-49	R.C.
N	-15 ADDED	4-20-48	R.C.
M	-14 ADDED	9-9-47	R.C.
L	-13 ADDED	6-17-47	R.C.
K	-12 ADDED	6-12-47	R.D.R.
J	15/16 WAS 7/8 FOR 'B' ON -9	4-25-47	C.E.K.
H	-11 ADDED	3-19-47	L.D.B.
G	-10 ADDED	2-4-47	L.D.B.
F	-9 ADDED	11-21-46	B.C.
E	-8 ADDED	11-8-46	C.E.K.
D	-7 ADDED	9-18-46	L.D.B.
C	-6 ADDED	8-14-46	L.D.B.
B	-5 ADDED	4-12-46	C.E.K.
A	-4 ADDED	2-20-46	L.R.

THIS DRAWING IS THE PROPERTY OF THE PIPER AIRCRAFT CORP. AND ITS POSSESSION BY UNAUTHORIZED PERSONS SHALL NOT BE CONSTRUED AS PERMISSION TO REPRODUCE FOR SALE, IN WHOLE OR IN PART, ANY DEVICES SHOWN THEREON

MODEL	PER PLANE	NEXT ASSEMBLY	SUPERSEDES	SUP. BY

PIPER AIRCRAFT CORP.
LOCK HAVEN, PENNA.

PART NO.	NO. REQ.	MATERIAL

SCALE — TOTAL WT.—LBS.
FINISH—PIPER SPECIFICATION #10
MANUFACTURING PRACTICES—PIPER SPECIFICATION #9

CLAMP - ROUND

H. M. Z.	R.E.T.		10466
1-22-46	1-24-46		
DRAFTSMAN	CHECKER	STANDARDS	

A700

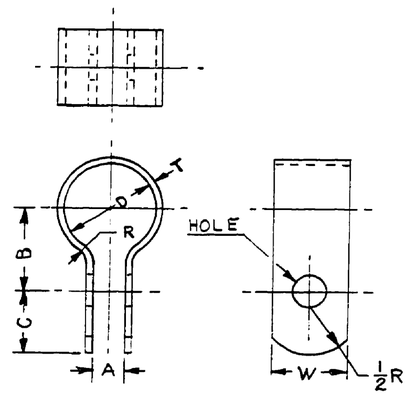

PART NO.	A	B	C	D	R	T	W	HOLE	MATERIAL
10466-2	1/16	13/32	1/4	9/32	1/32	.032	5/8	.141	#1025 STEEL
10466-3	1/16	15/32	1/4	5/16	3/64	.045	1	.191	#1025 STEEL
10466-4	3/32	3/8	5/16	3/8 -1/32	1/32	.032	5/16	.141	#1025 STEEL
10466-5	1/8	13/16	1/4	3/4	1/16	.062	7/8	.191	#1025 STEEL
10466-6	1/4	2 1/4	7/16	3 13/16	3/64	.045	5/8	.191	#1025 STEEL
10466-7	3/16	3/4	3/16	11/16	1/32	.032	3/8	.191	#1025 STEEL
10466-8	1/16	13/32	3/8	1/4 -1/32	1/32	.032	5/8	.191	#1025 STEEL
10466-9	3/4	15/16	3/8	1 1/8	1/16	.062	3/4	.191	#1025 STEEL
10466-10	1/8	11/16	1/4	3/4	3/32	.032	1/2	.166	24 ST ALUM.
10466-11	3/16	1	5/16	1 1/8	1/16	.045	7/8	.191	#1025 STEEL
10466-12	1/8	5/8	1/4	1/2	1/16	.032	1/2	.141	#1025 STEEL
10466-13	1/8	1 7/8	3/8	3 1/16	1/16	.045	5/8	.191	#1025 STEEL
10466-14	1/4	1 1/16	5/16	1 1/2 -1/32	1/32	.032	3/8	.191	#1025 STEEL
10466-15	—	1	1/2	7/16	3/32	.095	1	.302	#1025 STEEL
10466-16	1/4	1 3/8	3/8	1 1/4	1/16	.062	3/4	.250	#1025 STEEL
10466-17	3/16	1	5/16	1 3/8	1/16	.062	1	.191	#1025 STEEL
10466-18	3/16	15/16	5/16	1 1/4	1/16	.062	1	.191	#1025 STEEL
10466-19	3/16	7/8	5/16	1 1/8	1/16	.062	1	.191	#1025 STEEL
10466-20	1/16	13/32	3/8	7/32	1/32	.032	5/8	.191	#1025 STEEL
10466-21	1/4	1 1/8	1/4	1 3/4	1/16	.045	5/8	.191	#1025 STEEL
10466-22	1/16	5/16	3/16	3/16	1/32	.032	3/8	.141	#1025 STEEL
10466-23	1/16	13/32	3/16	3/16	1/32	.032	5/8	.191	#1025 STEEL
10466-24	1/8	3 5/16	5/16	5 7/8	1/16	.032	5/8	.191	#1025 STEEL

PART NO.	A	B	C	D	R	T	W	HOLE	MATERIAL

PART NO.	A	B	C	D	R	T	W	HOLE	MATERIAL

NOTE:
SEE ALSO DWG. 80002

LET	REVISION	DATE	BY
U	REDRAWN WITHOUT CHANGE	6-4-51	C.K.
T	-24 ADDED	2-14-51	C.K.
S	-22 & -23 ADDED	10-26-50	H.R.K.
R	-21 ADDED	9-14-50	F.C.S.
Q	-20 ADDED	2-1-50	C.K.
P	-17-18-19 ADDED	8-30-49	R.R.
O	-16 ADDED	1-5-49	R.C.

LET.	REVISION	DATE	BY
N	-15 ADDED	4-20-48	R.C.
M	-14 ADDED	9-9-47	R.C.
L	-13 ADDED	6-17-47	R.C.
K	-12 ADDED	6-12-47	R.D.R.
J	15/16 WAS 7/8 FOR 'B' ON -9	4-25-47	C.E.K.
H	-11 ADDED	3-19-47	L.D.B.
G	-10 ADDED	2-4-47	L.D.B.
F	-9 ADDED	11-21-46	B.C.
E	-8 ADDED	11-8-46	C.E.K.
D	-7 ADDED	9-18-46	L.D.B.
C	-6 ADDED	8-14-46	L.D.B.
B	-5 ADDED	4-12-46	C.E.K.
A	-4 ADDED	2-20-46	L.R.

THIS DRAWING IS THE PROPERTY OF THE PIPER AIRCRAFT CORP. AND ITS POSSESSION BY UNAUTHORIZED PERSONS SHALL NOT BE CONSTRUED AS PERMISSION TO REPRODUCE FOR SALE, IN WHOLE OR IN PART. ANY DEVICES SHOWN THEREON

MODEL	PER PLANE	NEXT ASSEMBLY	SUPERSEDES	SUP. BY

PIPER AIRCRAFT CORP.
LOCK HAVEN, PENNA.

PART NO.	NO. REQ.	MATERIAL

SCALE — TOTAL WT.—LBS.
FINISH—PIPER SPECIFICATION #10
MANUFACTURING PRACTICES—PIPER SPECIFICATION #9

CLAMP — ROUND

H. M. Z.	R. E. T.		10466
1-22-46	1-24-46		
DRAFTSMAN	CHECKER	STANDARDS	

A700

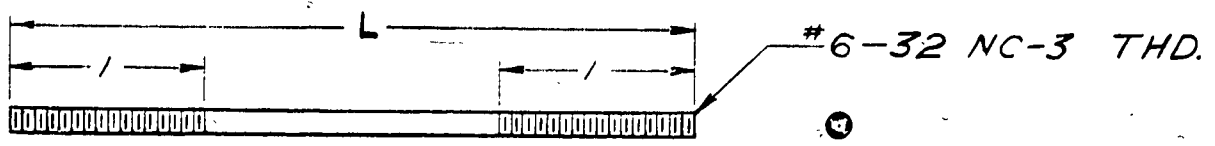

PART NO.	L.
10487	3 1/2
10487-2	2 1/2

THIS DRAWING IS THE PROPERTY OF THE PIPER AIRCRAFT CORP. AND ITS POSSESSION BY UNAUTHORIZED PERSONS SHALL NOT BE CONSTRUED AS PERMISSION TO REPRODUCE FOR SALE, IN WHOLE OR IN PART, ANY DEVICES SHOWN THEREON.

LET.	REVISION	DATE	BY
A	-2 & TABLE ADDED	6-6-49	C.K.

MODEL	PER PLANE	NEXT ASSEMBLY	SUPERSEDES	SUP. BY
[illegible]	8	[illegible]	[illegible]	

PIPER AIRCRAFT CORP.
LOCK HAVEN, PENNA.

PART No.	No. REQ.	1/8 DIA. x NOTED SIZE	#1010 C.F. STEEL DESCRIPTION
			MATERIAL

SCALE FULL SIZE — TOTAL WT.—LBS.

FINISH—PIPER SPECIFICATION #10

MANUFACTURING PRACTICES—PIPER SPECIFICATION #9

ROD — ENGINE BAFFLE TIE

DRAFTSMAN	CHECKER	STANDARDS
HERR 2-11-46	H. R. K. 2-11-46	

10487

PENCILTEX A. & B. SMITH CO., PGH., PA.

A 19

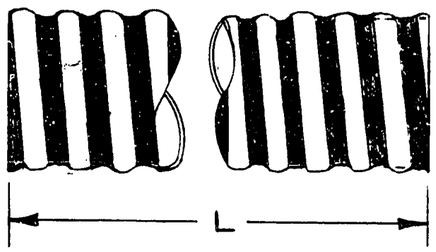

TYPE 2

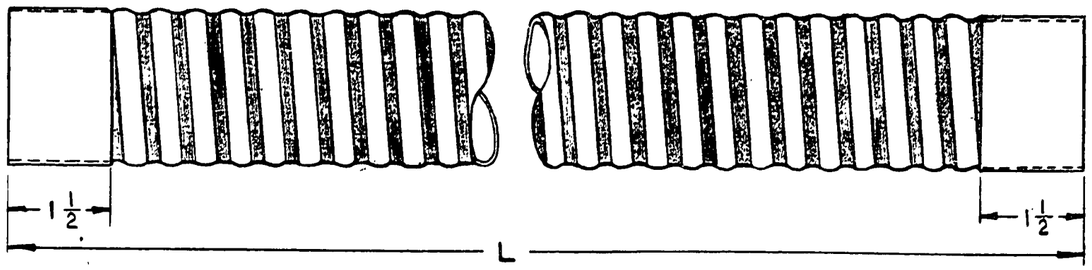

TYPE 1

PART No.	L.	TYPE	I.D.	MATERIAL
10525-2	7	1	2 3/16	U.S. RUBBER AIR DUCT HOSE STYLE P-208 (PURCH. U.S. RUBBER CO.)
10525-3	3	2	2 3/16	
10525-4	10½	2	2 3/16	
10525-5	5	2	2 3/16	
10525-6	2	2	2 3/16	
10525-7	6½	2	2 3/16	
10525-8	12	2	2 3/16	
10525-9	1	2	2 3/16	
10525-10	4	2	2 3/16	
10525-11	4	2	2	U.S. RUBBER MULTIFLEX FIBREGLASS DUCT
10525-12	21	2	2 3/16	U.S. RUBBER AIR DUCT HOSE STYLE P-208 (PURCH. U.S. RUBBER CO.)
10525-13	19	2	2 3/16	

THIS DRAWING IS THE PROPERTY OF THE PIPER AIRCRAFT CORP. AND ITS POSSESSION BY UNAUTHORIZED PERSONS SHALL NOT BE CONSTRUED AS PERMISSION TO REPRODUCE FOR SALE, IN WHOLE OR IN PART. ANY DEVICES SHOWN THEREON

LET.	REVISION	DATE	BY
J	-13 ADDED	4-12-51	C.K.
H	-12 ADDED	11-2-50	C.K.
G	TABLE REVISED & -11 ADDED	8-1-50	K.D.
F	-10 ADDED	11-23-49	HRK
E	-9 ADDED	3-11-49	RC
D	-8 ADDED	11-17-48	RC
C	-6, -7 ADDED	7-23-48	JCB
B	-5 ADDED	4-12-48	HRK
A	-4 ADDED	10-24-47	RC

MODEL	PER PLANE	NEXT ASSEMBLY	SUPERSEDES	SUP. BY
NOTED	NOTED	NOTED		

PIPER AIRCRAFT CORP.
LOCK HAVEN, PENNA.

PART No.	NO. REQ.	DESCRIPTION / MATERIAL

SCALE HALF SIZE — TOTAL WT.—LBS.

FINISH—PIPER SPECIFICATION #10

MANUFACTURING PRACTICES—PIPER SPECIFICATION #9

HOSE - AIR DUCT

L.R.	R.E.T.	
3-19-46	3-20-46	
DRAFTSMAN	CHECKER	STANDARDS

10525

A416

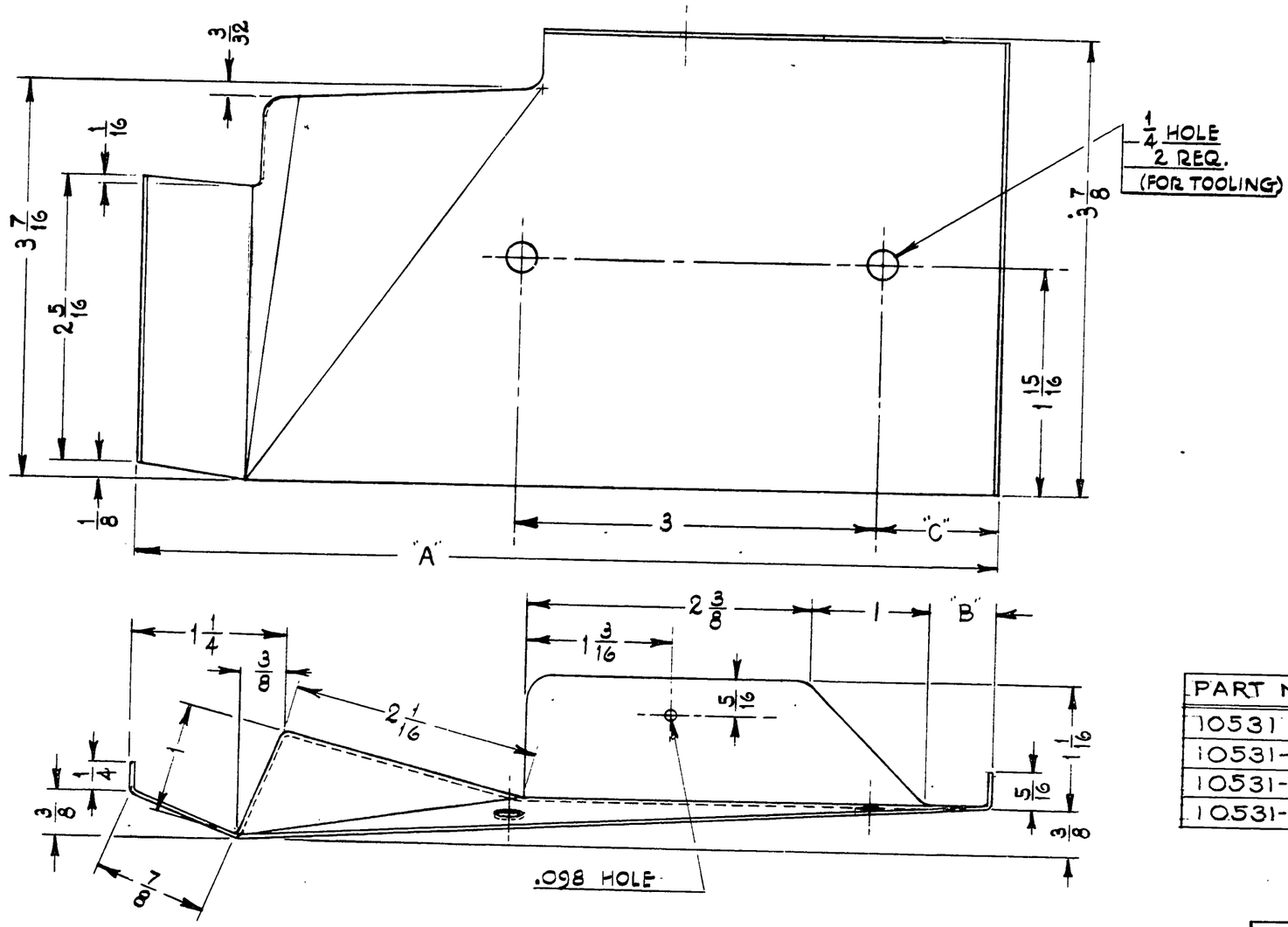

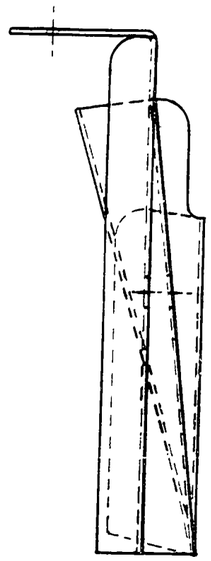

PART NO	A	B	C	REMARKS
10531	7 3/16	9/16	1	LH. SHOWN
10531-1	7 3/16	9/16	1	RH. OPPOSITE OF 10531
10531-2	8 13/16	2 3/16	2 5/8	LH. SHOWN
10531-3	8 13/16	2 3/16	2 5/8	RH. OPPOSITE OF 10531-2

NOTE:
OUTSIDE CORNERS MAY HAVE 7/32 RADII
INSIDE CORNERS 5/32 RADII AND
ALL BEND RADII 1/32 UNLESS OTHERWISE NOTED.

THIS DRAWING IS THE PROPERTY OF THE PIPER AIRCRAFT CORP. AND ITS POSSESSION BY UNAUTHORIZED PERSONS SHALL NOT BE CONSTRUED AS PERMISSION TO REPRODUCE FOR SALE, IN WHOLE OR IN PART, ANY DEVICES SHOWN THEREON

LET.	REVISION	DATE	BY
B	-24-3 ADDED	7-2-48	RM.
A	REVISED & REDRAWN	6-4-46	RJC

MODEL	PER PLANE	NEXT ASSEMBLY	SUPERSEDES	SUP. BY
J-3	1 HOH	10536		

PIPER AIRCRAFT CORP.
LOCK HAVEN, PENNA.

PART No.	No. REQ.	SIZE	DESCRIPTION
		.020 x 5 x NOTED	3S-1/2H. ALUM.
			MATERIAL

SCALE FULL SIZE — TOTAL WT.—LBS.
FINISH—PIPER SPECIFICATION #10
MANUFACTURING PRACTICES—PIPER SPECIFICATION #9

PLATE - WING FABRIC FORMER

DRAFTSMAN	CHECKER	STANDARDS
RJC 6-4-46	R.E.T. 6-5-46	

10531

417

A417

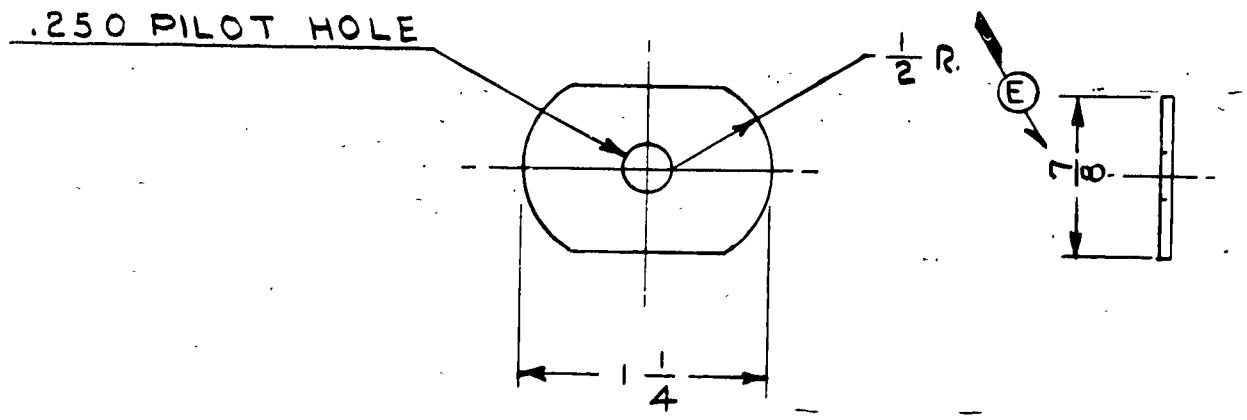

MODEL	PER SHIP	NEXT ASSEMBLY
J4	12	10522, 10532, 12551
J3L-4A, L-4B, TG-8	8	12512, 12551, 14192
J5, J5C, J5D, NE-1	12	10522, 10532, 12551
L-14	12	12551, 10522, 90409

F G

H

LET	REVISION	DATE	BY
K	REDRAWN WITHOUT CHANGE	6-12-51	I.M.M.
J	J5C N.A. 16362 & 16332 REM.	11-30-45	I.D.B.
H	L-14 MODEL REF. ADDED	6.12-45	J.B.M.
G	J5C N.A. 16362 WAS 11842	11-29-43	I.M.M.
F	J5C NEXT ASSY. 16332 WAS 11862	11-22-43	I.D.B.
E	7/8 DIM. ADDED	10-11-43	C.J.HILL
D	REDRAWN & REVISED	7-31-43	J.E.C.

MODEL	PER PLANE	NEXT ASSEMBLY	SUPERSEDES	SUP. BY
NOTED	NOTED	NOTED		

THIS DRAWING IS THE PROPERTY OF THE PIPER AIRCRAFT CORP. AND ITS POSSESSION BY UNAUTHORIZED PERSONS SHALL NOT BE CONSTRUED AS PERMISSION TO REPRODUCE FOR SALE IN WHOLE OR IN PART ANY DEVICES SHOWN THEREON.

PIPER AIRCRAFT CORP.
LOCK HAVEN, PENNA.

PART NO.	NO. REQ.	SIZE	DESCRIPTION
		.062 x 7/8 x 1 1/4	#1025 STEEL
		MATERIAL	

SCALE FULL SIZE | TOTAL WT.—LBS.

FINISH—PIPER SPECIFICATION # 10

MANUFACTURING PRACTICES—PIPER SPECIFICATION # 9

PLATE — REINFORCEMENT

DRAFTSMAN	CHECKER	STANDARDS	
CROWLEY 7-31-43	P.R.R. 8-2-43		10541

A20

WAS 21966-17

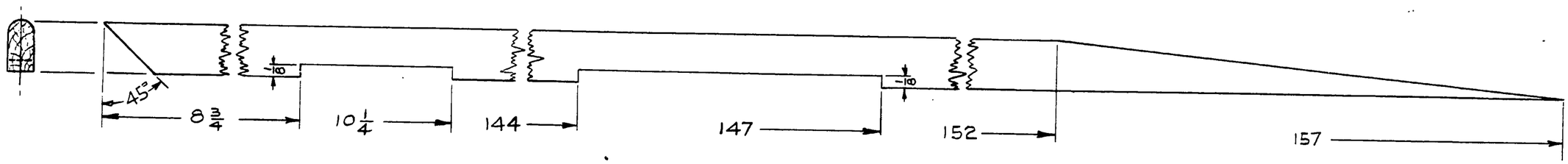

85021	DWG. REF. ONLY	SECTION-WOODEN STRIP	
		157 L.	PIPER SECTION 85021
PART No.	No. REQ.	SIZE	DESCRIPTION
		MATERIAL	
SCALE FULL SIZE		TOTAL WT.—LBS.	
FINISH—PIPER SPECIFICATION #10			
MANUFACTURING PRACTICES—PIPER SPECIFICATION #9			

STRINGER - FUSELAGE SIDE

LET.	REVISION	DATE	BY

THIS DRAWING IS THE PROPERTY OF THE PIPER AIRCRAFT CORP. AND ITS POSSESSION BY UNAUTHORIZED PERSONS SHALL NOT BE CONSTRUED AS PERMISSION TO REPRODUCE FOR SALE, IN WHOLE OR IN PART, ANY DEVICES SHOWN THEREON.

MODEL	PER PLANE	NEXT ASSEMBLY	SUPERSEDES	SUP. BY

PIPER AIRCRAFT CORP.
LOCK HAVEN, PENNA.

DRAFTSMAN	CHECKER	STANDARDS
C.E.K. 7-8-46	R.E.T. 7-8-46	

10546

418

A418

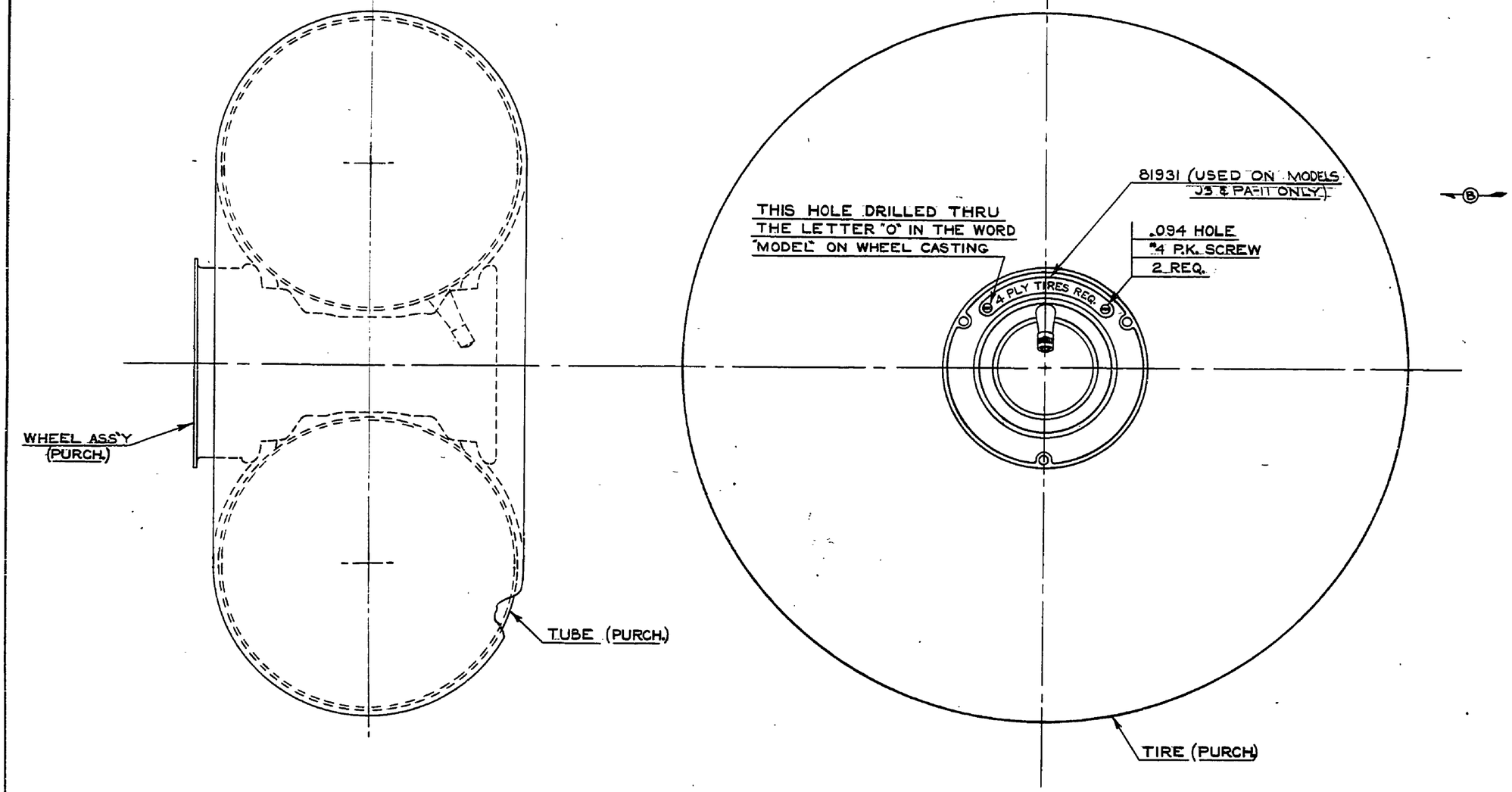

NOTE:

1. ON SPECIAL MODEL PA-11, COMPLETE AIRPLANE 10533-3, WHEEL CASINGS (8.00×4, 4 PLY, STOCK NO. 3900-114400) AND WHEEL TUBES (8.00×4, STOCK NO. 3900-506500) ARE GOVERNMENT FURNISHED PARTS.

LET.	REVISION	DATE	BY
C	NOTE 1 ADDED	7-6-45	R.R.
B	NOTE ADDED	12-6-47	ICS
A	WHEEL ASS'Y SPEC. REV. IN S/M	2-5-47	BC

THIS DRAWING IS THE PROPERTY OF THE PIPER AIRCRAFT CORP. AND ITS POSSESSION BY UNAUTHORIZED PERSONS SHALL NOT BE CONSTRUED AS PERMISSION TO REPRODUCE FOR SALE, IN WHOLE OR IN PART, ANY DEVICES SHOWN THEREON

MODEL	PER PLANE	NEXT ASSEMBLY	SUPERSEDES	SUP. BY
J3	2	STOCK		

PIPER AIRCRAFT CORP.
LOCK HAVEN, PENNA.

PART NO.	NO. REQ.	SIZE	DESCRIPTION / MATERIAL	
			WHEEL ASSY. *D-3-13-A-1 PURCH. HAYES INDUSTRIES INC.	
#4	2	¼ LONG	TYPE 'A' STOVE HD. P.K. SCREW	USED ON J3 & PA-11 ONLY
81931	1		PLACARD	
	1.		8.00×4 4 PLY TIRE, STATIC GROUNDED	SEE NOTE 1
	1.		8.00×4 RUBBER TUBE	

SCALE 6 IN. = 1 FT. | TOTAL WT.—LBS.
FINISH—PIPER SPECIFICATION #10
MANUFACTURING PRACTICES—PIPER SPECIFICATION #9

WHEEL ASSEMBLY—
8.00 × 4

DRAFTSMAN	CHECKER	STANDARDS
C.E.V. 4-4-46	P.G.T. 4-5-46	

10548

A701

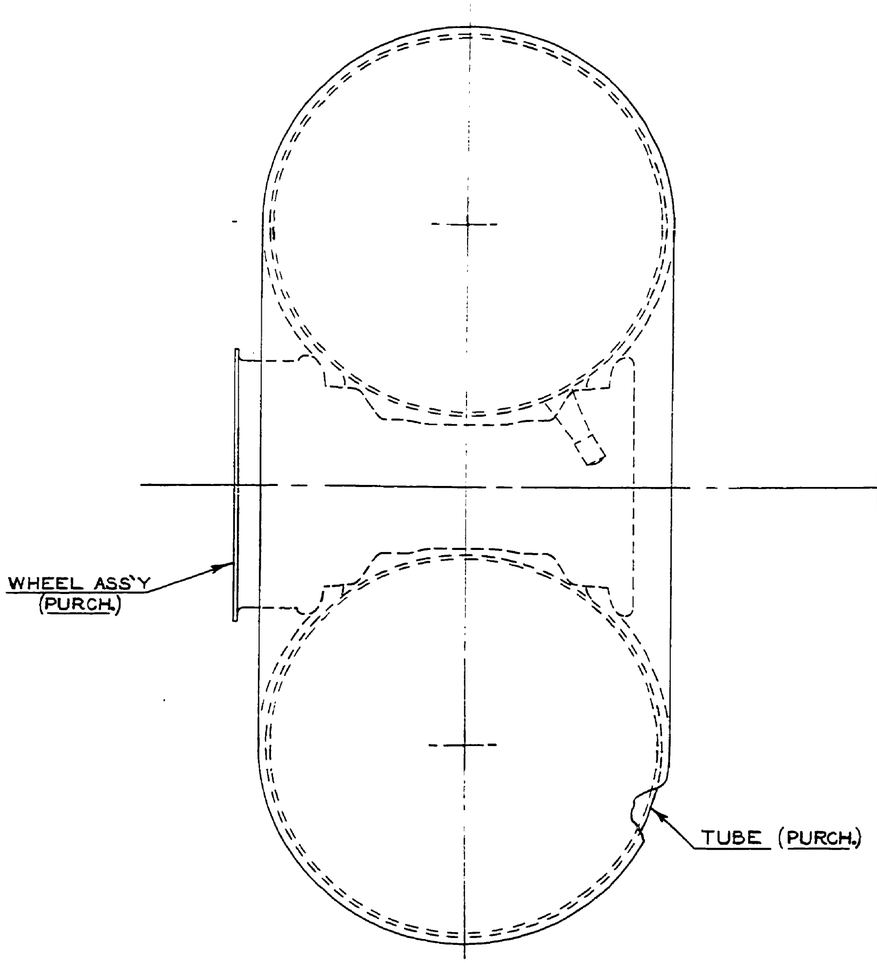

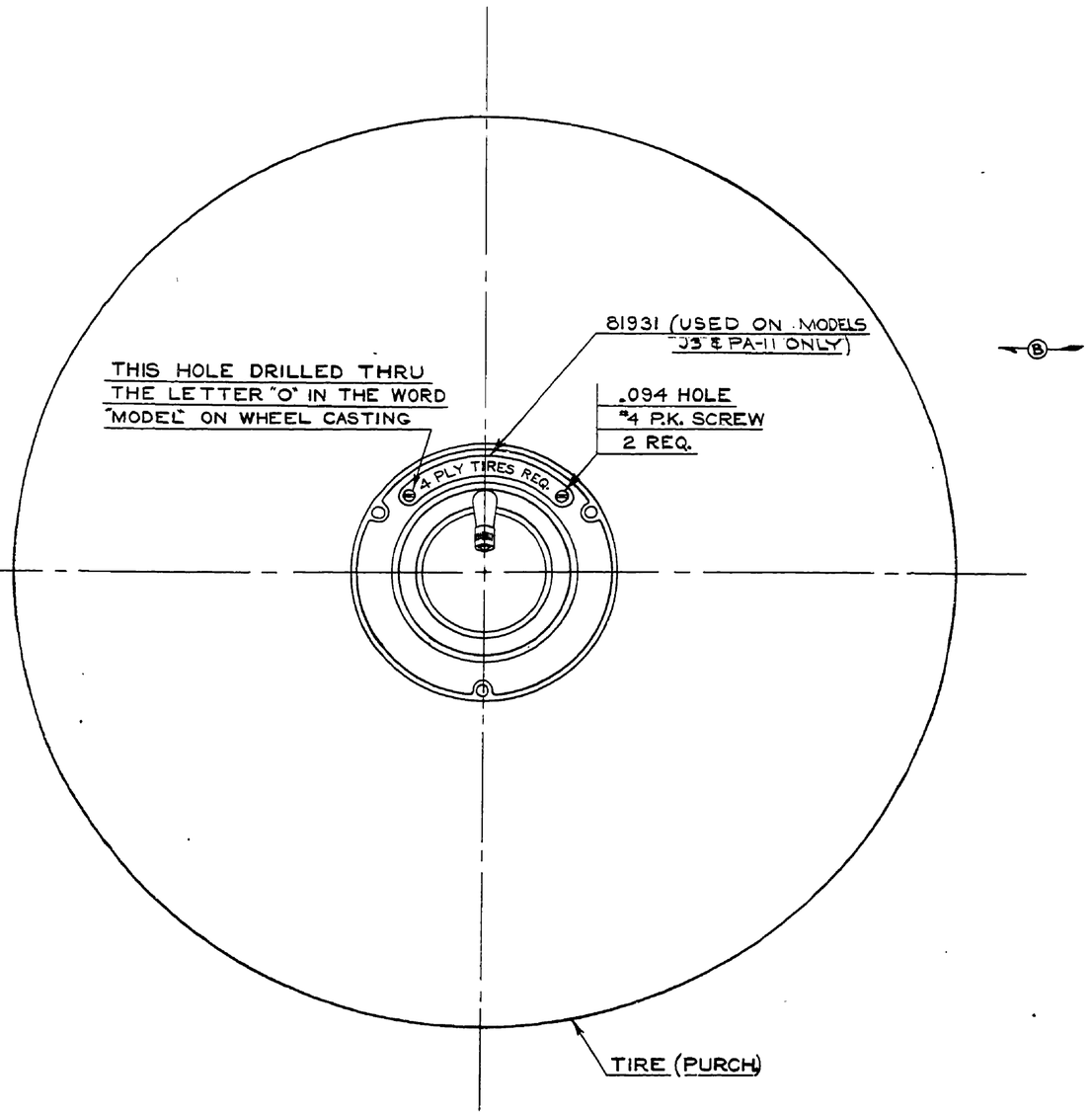

NOTE:

1. ON SPECIAL MODEL PA-11, COMPLETE AIRPLANE 10533-3, WHEEL CASINGS (8.00×4, 4 PLY, STOCK NO. 3900-114400) AND WHEEL TUBES (8.00×4, STOCK NO. 3900-506500) ARE GOVERNMENT FURNISHED PARTS.

LET.	REVISION	DATE	BY
C	NOTE 1. ADDED	7-8-49	R.R.
B	NOTE ADDED	12-9-47	JCS.
A	WHEEL ASSY. SPEC. REV. IN D/M	2-5-47	BC

THIS DRAWING IS THE PROPERTY OF THE PIPER AIRCRAFT CORP. AND ITS POSSESSION BY UNAUTHORIZED PERSONS SHALL NOT BE CONSTRUED AS PERMISSION TO REPRODUCE FOR SALE, IN WHOLE OR IN PART, ANY DEVICES SHOWN THEREON

MODEL	PER PLANE	NEXT ASSEMBLY	SUPERSEDES	SUP. BY
J3	2	5163		

PIPER AIRCRAFT CORP.
LOCK HAVEN, PENNA.

	No. REQ.	SIZE	DESCRIPTION
	1		WHEEL ASS'Y. #D-3-13-A-1 PURCH. HAYES INDUSTRIES INC.
#4	2	¼ LONG	TYPE "A" STOVE HD. P.K. SCREW — USED ON J3 & PA-11 ONLY
81931	1		PLACARD
	1	8.00 x 4 4 PLY	TIRE, STATIC GROUNDED — SEE NOTE 1
	1	8.00 x 4	RUBBER TUBE — SEE NOTE 1

PART No. — MATERIAL

SCALE 6 IN. = 1 FT. — TOTAL WT.—LBS.

FINISH—PIPER SPECIFICATION #10

MANUFACTURING PRACTICES—PIPER SPECIFICATION #9

WHEEL ASSEMBLY—
8.00 x 4

DRAFTSMAN	CHECKER	STANDARDS
C.E.V. 4-4-46	P.E.T. 4-5-46	

10548

701

A701

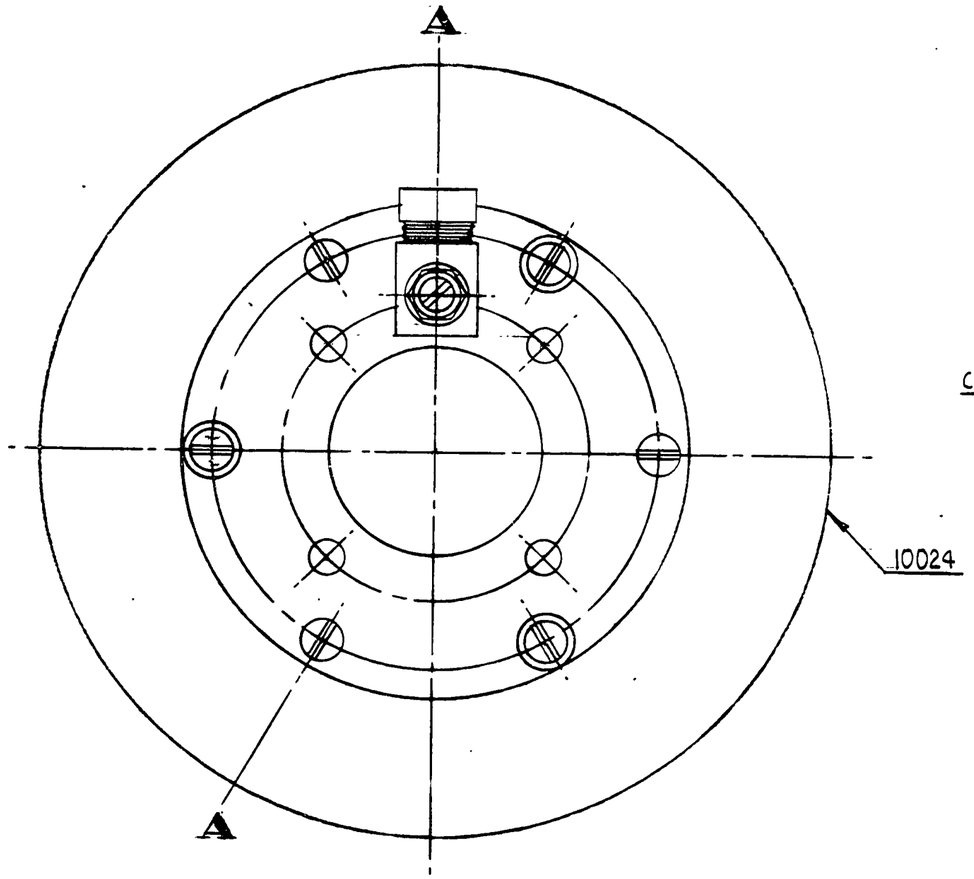

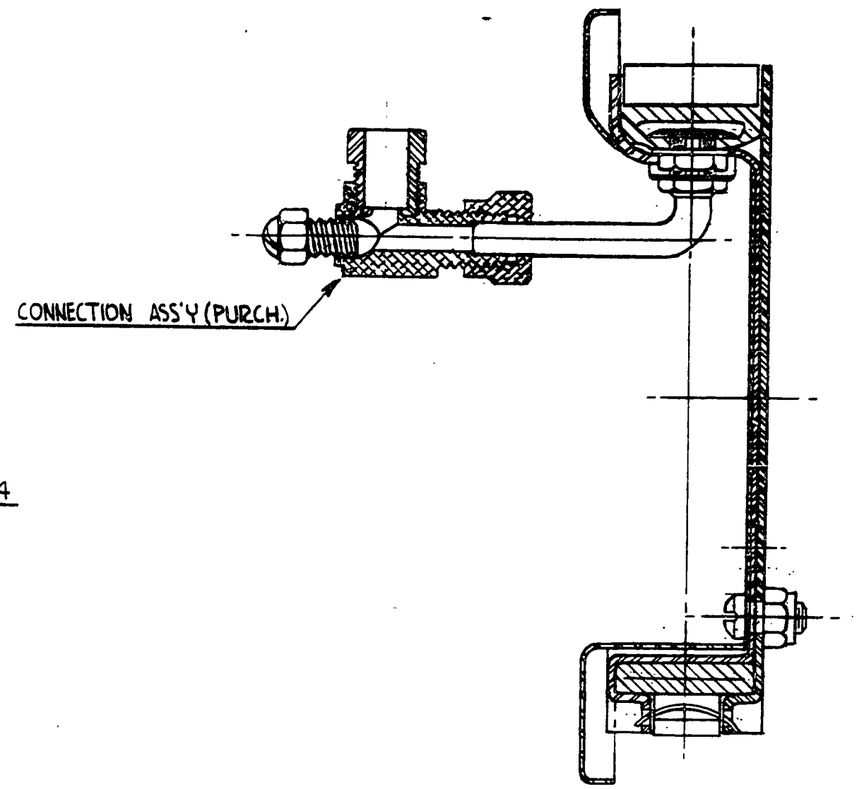

SECTION A A

	1	¼ TUBE CONNECTION ASS'Y. *B-57-239	PURCH. HAYES INDUSTRIES INC.
10024	1	EXPANDER TUBE. BRAKE ASS'Y.	
PART No.	No. REQ.	SIZE / MATERIAL	DESCRIPTION

SCALE FULL SIZE — TOTAL WT.–LBS.

FINISH–PIPER SPECIFICATION #10

MANUFACTURING PRACTICES–PIPER SPECIFICATION #9

BRAKE ASSEMBLY

LET.	REVISION	DATE	BY

THIS DRAWING IS THE PROPERTY OF THE PIPER AIRCRAFT CORP. AND ITS POSSESSION BY UNAUTHORIZED PERSONS SHALL NOT BE CONSTRUED AS PERMISSION TO REPRODUCE FOR SALE, IN WHOLE OR IN PART, ANY DEVICES SHOWN THEREON

MODEL	PER PLANE	NEXT ASSEMBLY	SUPERSEDES	SUP. BY
J3	2	3/513		

PIPER AIRCRAFT CORP.
LOCK HAVEN, PENNA.

L.R.	E.E.T.		
4-4-46	4-5-46		
DRAFTSMAN	CHECKER	STANDARDS	10549

419

A419

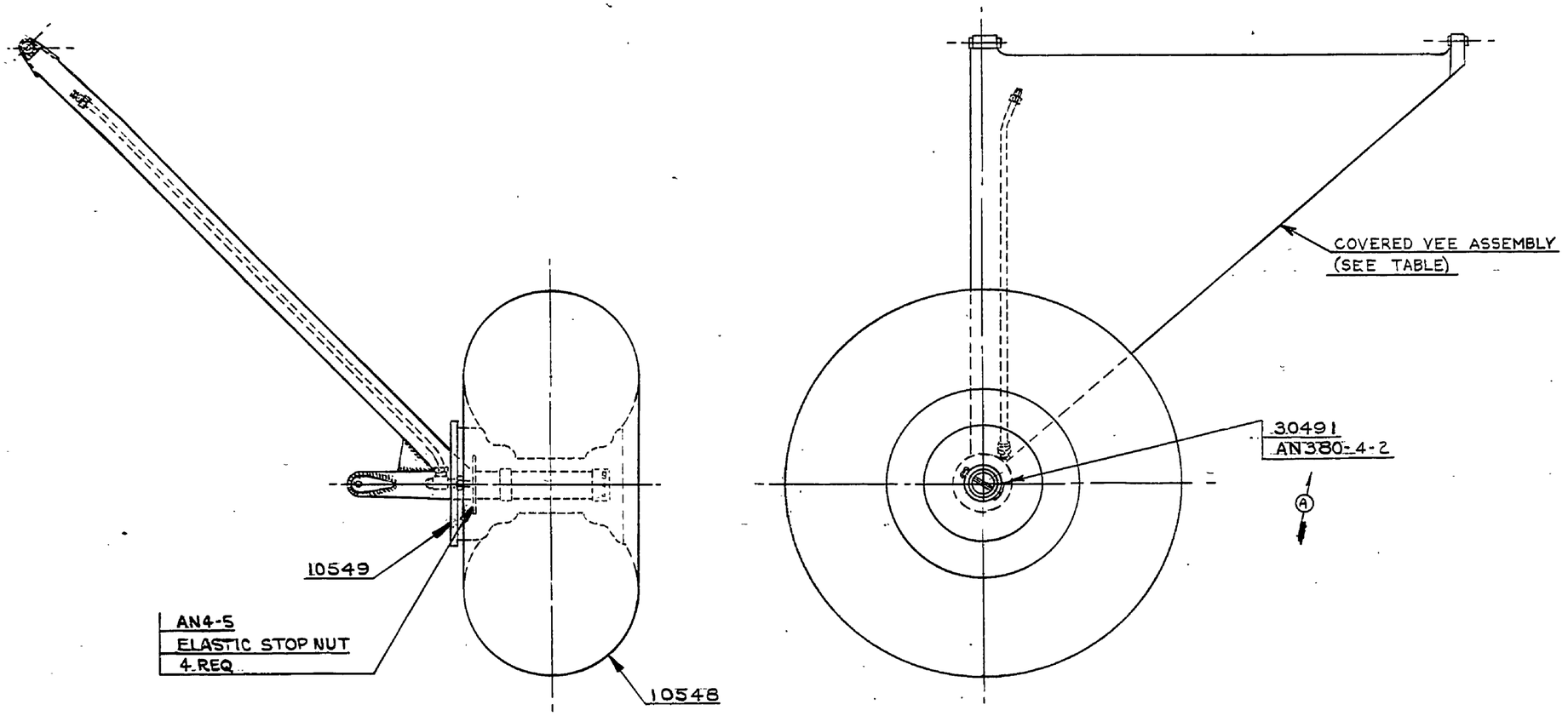

ASSY. NO.	COVERED VEE NO.	REMARKS
10550	10032	L.H. SHOWN
10550-1	10032-1	R.H. OPPOSITE
10550-2	10032-2	L.H. SHOWN
10550-3	10032-3	R.H. OPPOSITE
10550-4	10032-4	L.H. SHOWN
10550-5	10032-5	R.H. OPPOSITE
10550-6	10032-6	L.H. SHOWN

10548	1	WHEEL ASSY.	
	4	ELASTIC STOP NUT #4ZE048	
AN4-5	4	BOLT	
AN380-4-2	1	COTTER PIN	
30491	1	NUT	
10549	1	BRAKE ASSY.	
	1	VEE ASSY.	SEE TABLE

THIS DRAWING IS THE PROPERTY OF THE PIPER AIRCRAFT CORP. AND ITS POSSESSION BY UNAUTHORIZED PERSONS SHALL NOT BE CONSTRUED AS PERMISSION TO REPRODUCE FOR SALE, IN WHOLE OR IN PART, ANY DEVICES SHOWN THEREON

LET.	REVISION	DATE	BY
D	10550-5 & 10550-6 ADDED	1-26-51	HRK
C	10032-3 & 10032-4 ADDED	8-15-50	FCS
B	NOTE LREN.; -2 & 10032-2 ADD.	4-22-49	R.R.
A	AN380-4-2 WAS AN380-5-3	1-8-47	E.L.N.

MODEL | PER PLANE | NEXT ASSEMBLY | SUPERSEDES | SUP. BY

PIPER AIRCRAFT CORP.
LOCK HAVEN, PENNA.

PART NO. | NO. REQ. | NAME / MATERIAL

SCALE 3 IN. = 1 FT. | TOTAL WT.—LBS.

FINISH—PIPER SPECIFICATION #10

MANUFACTURING PRACTICES—PIPER SPECIFICATION #9

VEE ASSEMBLY—LANDING GEAR (COMPLETE)

DRAFTSMAN	CHECKER	STANDARDS
C.L.W.	E.F.	
4-4-46	4-5-46	

10550

A702

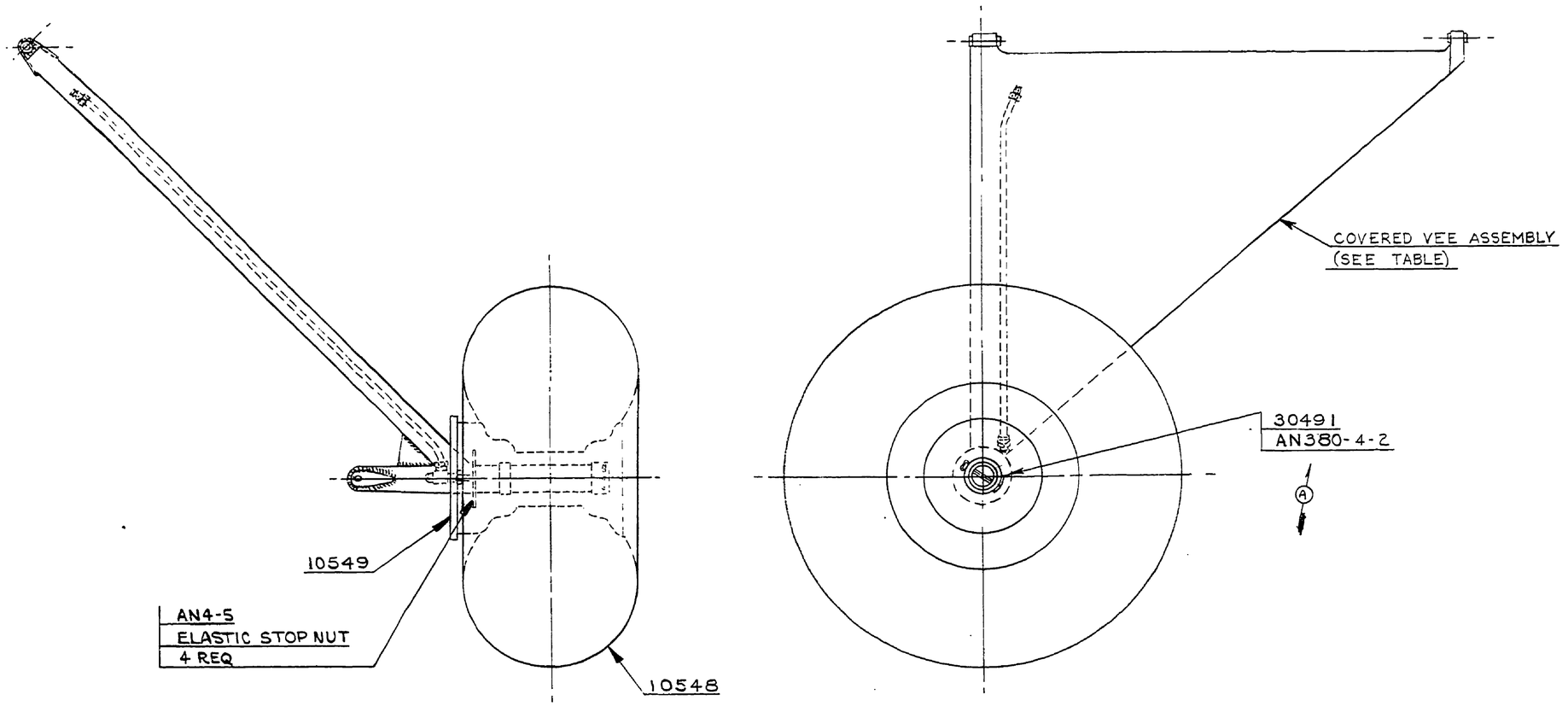

ASSY. NO.	COVERED VEE NO.	REMARKS
10550	10032	L.H. SHOWN
10550-1	10032-1	R.H. OPPOSITE
10550-2	10032-2	L.H. SHOWN
10550-3	10032-3	R.H. OPPOSITE
10550-4	10032-4	L.H. SHOWN
10550-5	10032-5	R.H. OPPOSITE
10550-6	10032-6	L.H. SHOWN

10548	1	WHEEL ASSY.
	4	ELASTIC STOP NUT #4,2E048
AN4-5	4	BOLT
AN380-4-2	1	COTTER PIN
30491	1	NUT
10549	1	BRAKE ASSY.
	1	VEE ASSY. — SEE TABLE

LET.	REVISION	DATE	BY
D	10550-5 & 10550-6 ADDED	1-26-51	HRK
C	10032-3 & 10032-4 ADDED	8-15-50	FCS
B	NOTE REM.: -2 & 10032-2 ADD.	6-22-49	R.R.
A	AN380-4-2 WAS AN380-5-3	1-8-47	E.L.N.

THIS DRAWING IS THE PROPERTY OF THE PIPER AIRCRAFT CORP. AND ITS POSSESSION BY UNAUTHORIZED PERSONS SHALL NOT BE CONSTRUED AS PERMISSION TO REPRODUCE FOR SALE, IN WHOLE OR IN PART, ANY DEVICES SHOWN THEREON

MODEL	PER PLANE	NEXT ASSEMBLY	SUPERSEDES	SUP. BY

PIPER AIRCRAFT CORP.
LOCK HAVEN, PENNA.

PART NO. | NO. REQ. | NAME / MATERIAL

SCALE 3 IN. = 1 FT. | TOTAL WT.—LBS.

FINISH—PIPER SPECIFICATION #10

MANUFACTURING PRACTICES—PIPER SPECIFICATION #9

VEE ASSEMBLY—LANDING GEAR (COMPLETE)

DRAFTSMAN	CHECKER	STANDARDS
C.L.W. 4-4-46	E.F.T. 4-3-46	

10550

A702

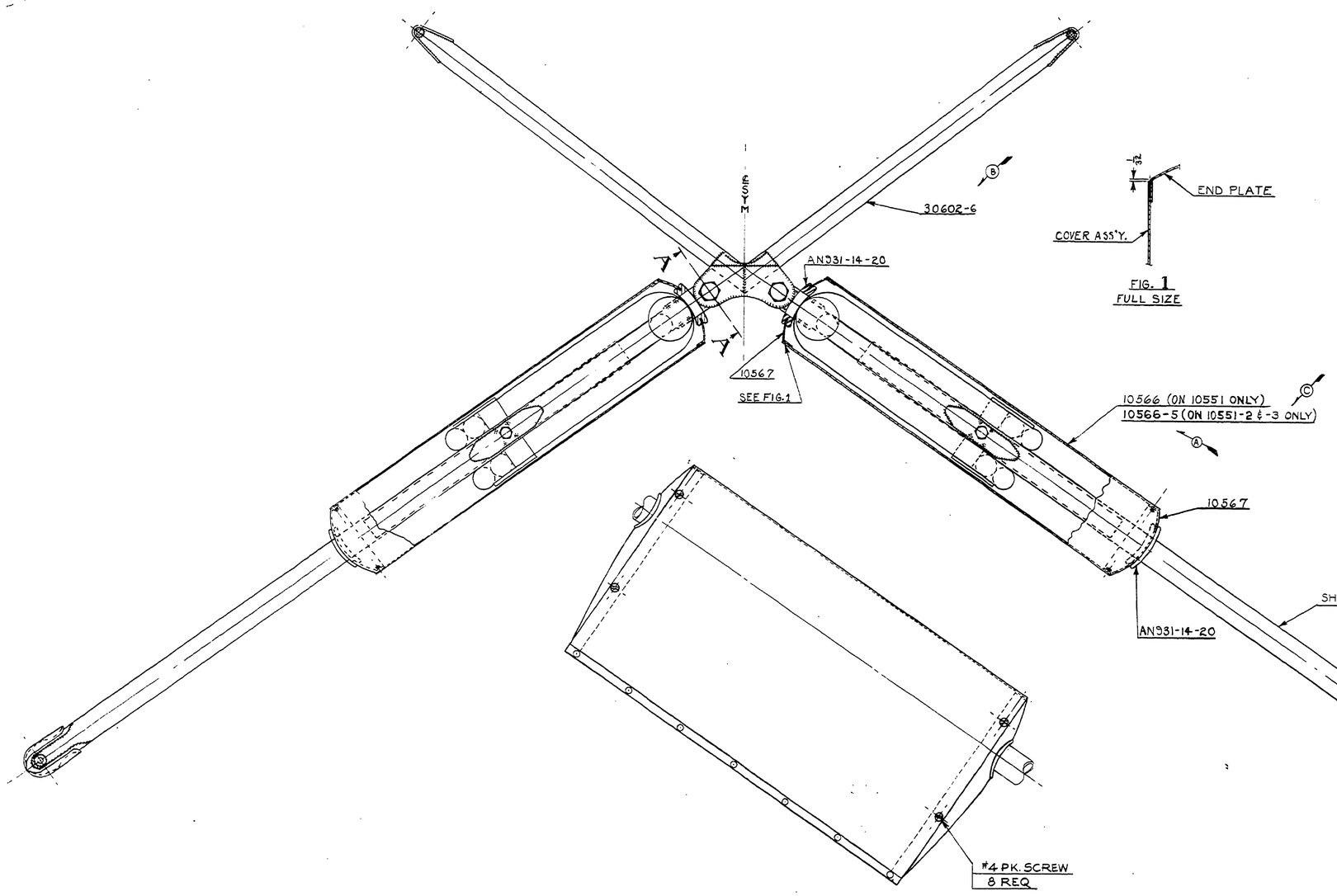

FIG. 1
FULL SIZE

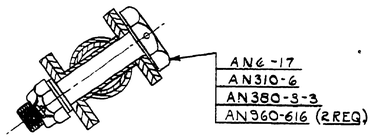

SECTION A-A
FULL SIZE

ASSY. NO.	SHOCK STRUT NO.
10551	10536
10551-2	12843
10551-3	12998

12998	2	SHOCK STRUT ASSY. (ON 10551-3 ONLY)
10566-5	2	SHOCK CORD COVER ASSY. (ON 10551-2 & -3 ONLY)
12843	2	SHOCK STRUT ASSY. (ON 10551-2 ONLY)
#4	16	1/4 LG. TYPE 'A' STOVE HD. PARKER SCREW
AN960-616	4	WASHER
AN931-14-20	4	GROMMET
AN6-17	2	BOLT
AN380-3-3	2	COTTER PIN
AN310-6	2	NUT
30602-6	1	CABANE VEE ASS'Y.
10567	4	END PLATE
10566	2	SHOCK CORD COVER ASSY. (ON 10551 ONLY)
10536	2	SHOCK STRUT ASSY. (ON 10551 ONLY)
PART NO.	NO. REQ.	SIZE DESCRIPTION MATERIAL

SCALE 6 IN. = 1 FT. TOTAL WT.—LBS.

FINISH—PIPER SPECIFICATION #10

MANUFACTURING PRACTICES—PIPER SPECIFICATION #9

VEE ASSEMBLY-CABANE (COMPLETE)

LET.	REVISION	DATE	BY
C	10551-3 & TABLE ADDED	9-7-50	FCS
B	30602-6 WAS 30602	6-12-50	C.K.
A	-2, 10566-5 & 12843 ADDED	3-3-50	MRK

THIS DRAWING IS THE PROPERTY OF THE PIPER AIRCRAFT CORP. AND ITS POSSESSION BY UNAUTHORIZED PERSONS SHALL NOT BE CONSTRUED AS PERMISSION TO REPRODUCE FOR SALE, IN WHOLE OR IN PART, ANY DEVICES SHOWN THEREON.

MODEL	PER PLANE	NEXT ASSEMBLY	SUPERSEDES	SUP. BY

PIPER AIRCRAFT CORP.
LOCK HAVEN, PENNA.

DRAFTSMAN	CHECKER	STANDARDS
HMZ 6-10-46	E.E.T. 2-11-46	

10551

PHILADELPHIA BLUE PRINT CO.

834

A834

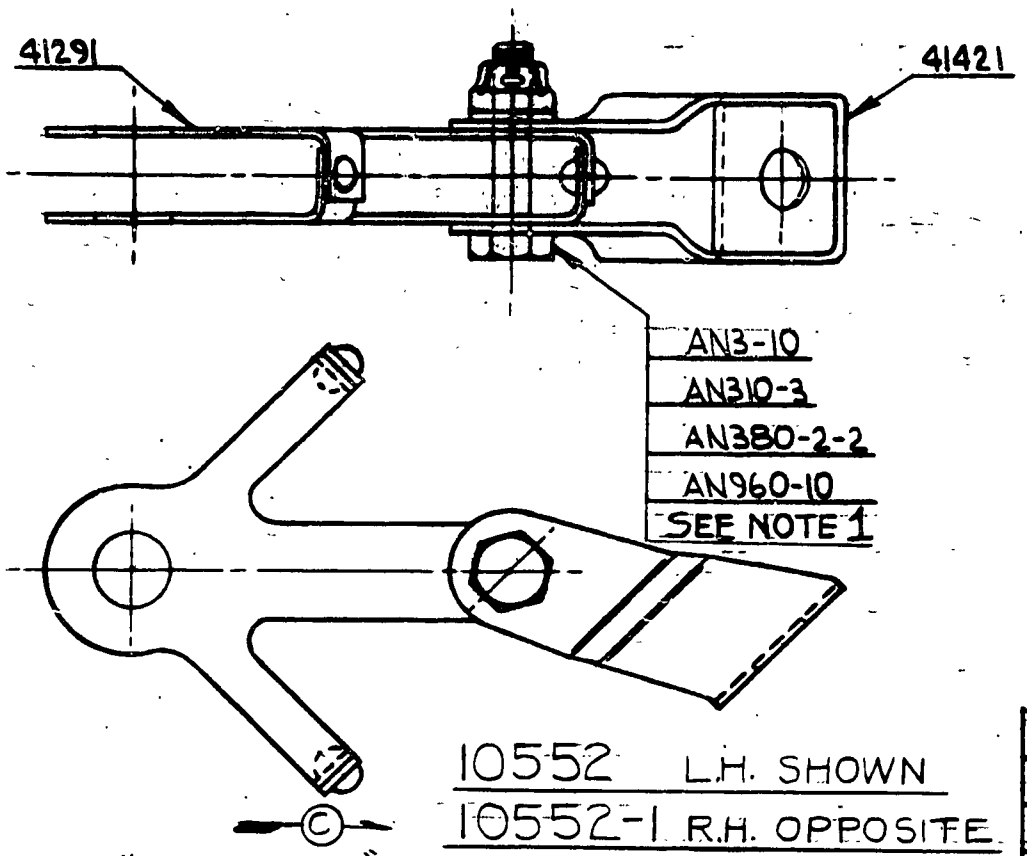

10552 L.H. SHOWN
10552-1 R.H. OPPOSITE

NOTE 1: WHERE "SEE NOTE 1 IS INDICATED ELASTIC STOP NUTS (TYPE 22M OR 42E) AND UNDRILLED BOLTS MAY BE USED

PART No.	No. REQ.	DESCRIPTION / MATERIAL
AN960-10	1	WASHER
AN380-2-2	1	COTTER PIN
AN310-3	1	NUT
AN3-10	1	BOLT
41421	1	PULLEY BRKT. FITTING
41291	1	PULLEY HOUSING

SCALE FULL SIZE | TOTAL WT.—LBS.

FINISH—PIPER SPECIFICATION #10

MANUFACTURING PRACTICES—PIPER SPECIFICATION #9

HOUSING ASSEMBLY - PULLEY

THIS DRAWING IS THE PROPERTY OF THE PIPER AIRCRAFT CORP. AND ITS POSSESSION BY UNAUTHORIZED PERSONS SHALL NOT BE CONSTRUED AS PERMISSION TO REPRODUCE FOR SALE, IN WHOLE OR IN PART, ANY DEVICES SHOWN THEREON.

MODEL	PER PLANE	NEXT ASSEMBLY	SUPERSEDES	SUP. BY
J3	2	13376		

LET.	REVISION	DATE	BY
C	-1 ADDED	5-8-47	E.L.N.
B	NOTE 1 REVISED	12-31-46	I.M.M.
A	NOTE 1 ADDED	6-18-46	C.E.K.

PIPER AIRCRAFT CORP.
LOCK HAVEN, PENNA.

DRAFTSMAN	CHECKER	STANDARDS	
L.R. 4-9-46	E.E.T. 4-15-46		10552

PENCILTEX A. & B. SMITH CO., PGH., PA.

A21

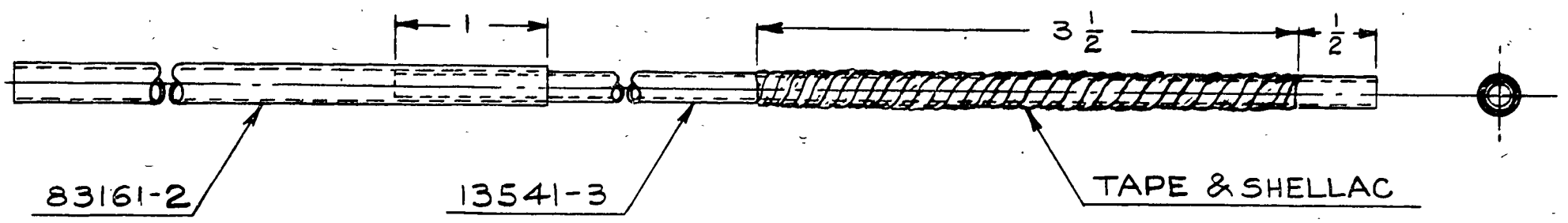

	1	3/4 x 6 L.	FRICTION TAPE
83161-2	1	HOSE	
13541-3	1	AIRSPEED TUBING	
PART No.	No. REQ.	SIZE	DESCRIPTION / MATERIAL

SCALE FULL SIZE — TOTAL WT.—LBS.

FINISH—PIPER SPECIFICATION #10

MANUFACTURING PRACTICES—PIPER SPECIFICATION #9

TUBE ASSEMBLY-AIRSPEED

THIS DRAWING IS THE PROPERTY OF THE PIPER AIRCRAFT CORP. AND ITS POSSESSION BY UNAUTHORIZED PERSONS SHALL NOT BE CONSTRUED AS PERMISSION TO REPRODUCE FOR SALE, IN WHOLE OR IN PART, ANY DEVICES SHOWN THEREON.

LET.	REVISION	DATE	BY

MODEL	PER PLANE	NEXT ASSEMBLY	SUPERSEDES	SUP. BY

PIPER AIRCRAFT CORP.
LOCK HAVEN, PENNA.

DRAFTSMAN	CHECKER	STANDARDS
C.E.K. 4-9-46	R.E.T. 4-12-46	

10554

PENCILTEX A. & B. SMITH CO., PGH., PA.

A 22

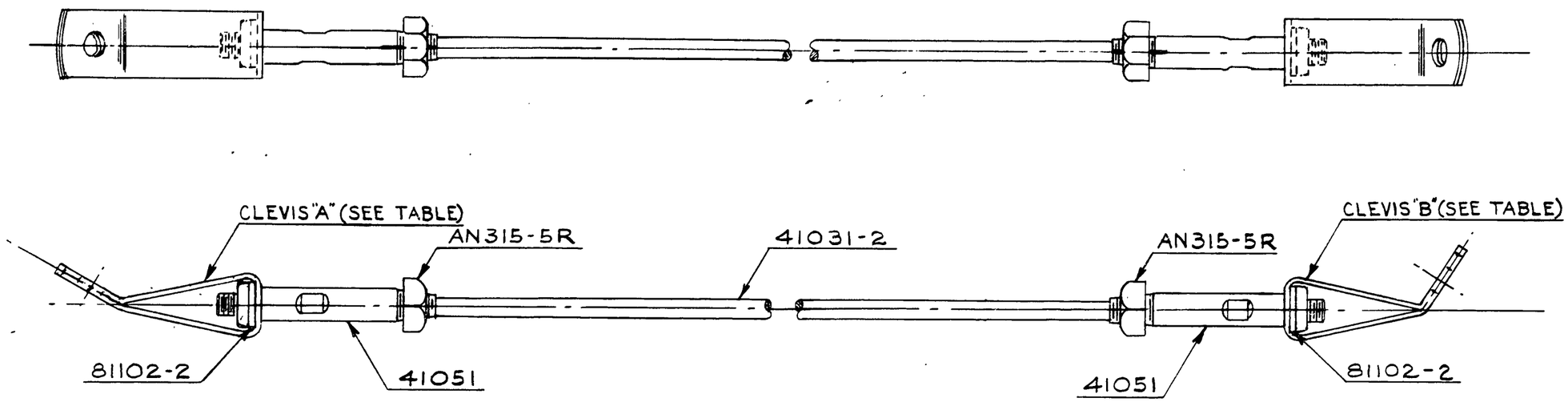

ASSY. NO.	CLEVIS "A"	CLEVIS "B"
10555	40521-2	40521-5
10555-2	40521-7	40521-8

PART No.	No. REQ.	NAME / MATERIAL
AN315-5R	2	NUT
81102-2	2	WASHER
41051	2	NIPPLE
41031-2	1	TAIL BRACE WIRE
SEE TABLE	1	CLEVIS
SEE TABLE	1	CLEVIS

SCALE FULL SIZE | TOTAL WT.–LBS.

FINISH–PIPER SPECIFICATION #10

MANUFACTURING PRACTICES–PIPER SPECIFICATION #9

WIRE ASSEMBLY - UPPER TAIL BRACE

THIS DRAWING IS THE PROPERTY OF THE PIPER AIRCRAFT CORP. AND ITS POSSESSION BY UNAUTHORIZED PERSONS SHALL NOT BE CONSTRUED AS PERMISSION TO REPRODUCE FOR SALE, IN WHOLE OR IN PART, ANY DEVICES SHOWN THEREON

MODEL	PER PLANE	NEXT ASSEMBLY	SUPERSEDES	SUP. BY
J3	2	41155		

LET.	REVISION	DATE	BY
A	-2,40521-7,40521-8 & TABLE ADDED	1-11-51	C.K.

PIPER AIRCRAFT CORP.
LOCK HAVEN, PENNA.

DRAFTSMAN	CHECKER	STANDARDS
C.E.K 4-10-46	E.E.T. 4-10-46	

10555

420

A420

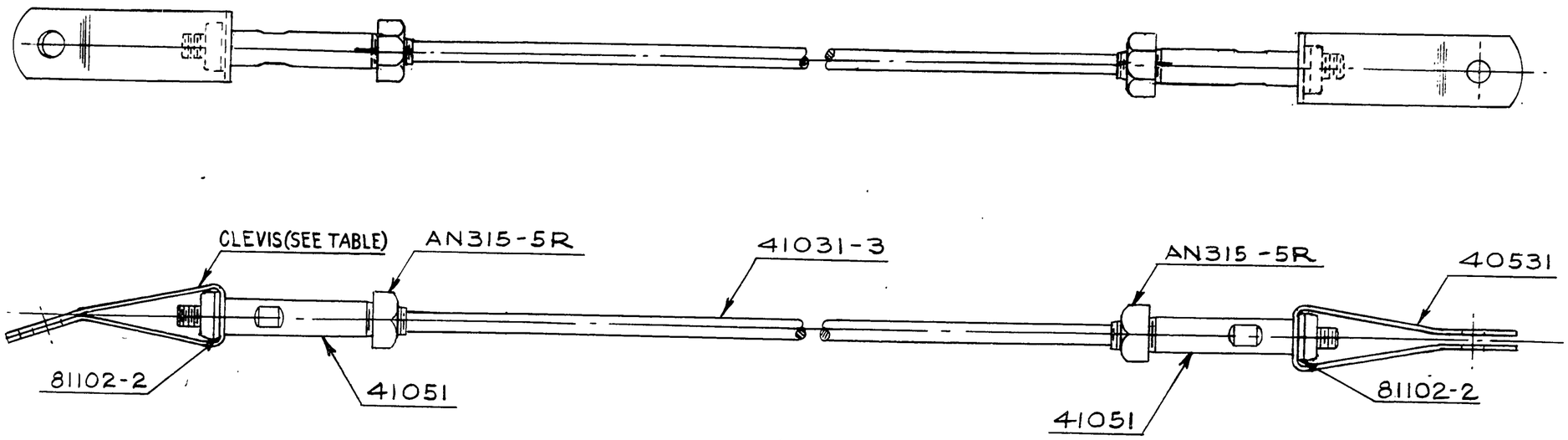

ASSY. NO.	CLEVIS
10556	40521-6
10556-2	40521-9

PART No.	No. REQ.	NAME / MATERIAL
AN315-5R	2	NUT
81102-2	2	WASHER
41051	2	NIPPLE
41031-3	1	TAIL BRACE WIRE
40531	1	CLEVIS
SEE TABLE	1	CLEVIS

THIS DRAWING IS THE PROPERTY OF THE PIPER AIRCRAFT CORP. AND ITS POSSESSION BY UNAUTHORIZED PERSONS SHALL NOT BE CONSTRUED AS PERMISSION TO REPRODUCE FOR SALE, IN WHOLE OR IN PART, ANY DEVICES SHOWN THEREON

LET.	REVISION	DATE	BY
A	-2, 40521-9 & TABLE ADDED	1-11-51	C.K.

MODEL	PER PLANE	NEXT ASSEMBLY	SUPERSEDES	SUP. BY
J5	2	41105		

PIPER AIRCRAFT CORP.
LOCK HAVEN, PENNA.

SCALE FULL SIZE | TOTAL WT.—LBS.
FINISH—PIPER SPECIFICATION #10
MANUFACTURING PRACTICES—PIPER SPECIFICATION #9

WIRE ASSEMBLY - LOWER TAIL BRACE

DRAFTSMAN	CHECKER	STANDARDS
C.E.K. 4-2-46	E.E.T. 4-10-46	

10556

421

A421

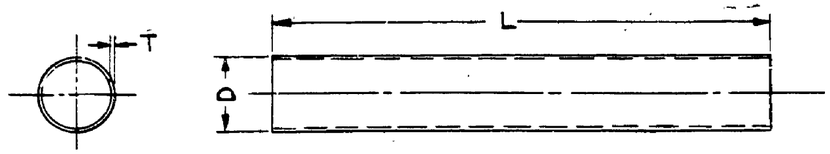

PART NO.	D	T	L	MATERIAL	MODEL	PER PLANE	NEXT ASSEMBLY	REMARKS
10562-2	5/8	.035	11 1/2	#4130 STL.	PA-11			
10562-3	5/8	.035	16 1/2	#4130 STL.	PA-11			
10562-4	5/8	.035	28 1/2	#4130 STL.	PA-11			
10562-5	5/8	.035	17 7/8	#1025 STL.	PA-11			WAS 21346-8
10562-6	5/8	.035	26 3/4	#1025 STL.	PA-11			WAS 21346-16
10562-7	7/8	.035	31 3/8	#1025 STL.	PA-11			WAS 21346-9
10562-8	7/8	.035	31 7/16	#1025 STL.	PA-11			WAS 21346-10
10562-9	7/8	.035	33 5/8	#1025 STL.	PA-11			WAS 21346-11
10562-10	7/8	.035	33 3/4	#1025 STL.	PA-11			WAS 21346-12
10562-11	7/8	.035	24	#1025 STL.	PA-11			WAS 21346-63
10562-12	1	.035	47 5/8	#4130 STL.	PA-11			WAS 21346-62
10562-13	5/8	.035	32 15/16	#1025 STL.	PA-11			WAS 21346-61
10562-14	5/8	.035	23 3/32	#1025 STL.	PA-11			WAS 21346-60
10562-15	5/8	.028	46 19/32	#1025 STL.	PA-11			WAS 21346-56
10562-16	5/8	.028	31 5/8	#1025 STL.	PA-11			WAS 21346-29
10562-17	1/2	.028	28	#1025 STL.	PA-11			WAS 21346-59
10562-18	1/2	.028	17 23/32	#1025 STL.	PA-11			WAS 21346-58
10562-19	5/8	.028	43 7/8	#1025 STL.	PA-11			WAS 21346-55
10562-20	1/2	.028	21 3/8	#1025 STL.	PA-11			WAS 21346-57
10562-21	3/4	.049	9 1/8	#4130 STL.	PA-11			WAS 21346-54
10562-22	1/2	.028	9	#1025 STL.	PA-11			WAS 21346-78
10562-23	1/2	.028	9	#1025 STL.	PA-11			WAS 21346-77
10562-24	1/2	.028	10 3/8	#1025 STL.	PA-11			WAS 21346-76
10562-25	1/2	.028	10 11/32	#1025 STL.	PA-11			WAS 21346-75
10562-26	5/8	.028	31 5/8	#1025 STL.	PA-11			WAS 21346-30
10562-27	5/8	.028	18 3/32	#1025 STL.	PA-11			WAS 21346-28
10562-28	5/8	.028	32 5/16	#1025 STL.	PA-11			WAS 21346-27
10562-29	5/8	.028	21 23/32	#1025 STL.	PA-11			WAS 21346-26
10562-30	5/8	.028	34	#1025 STL.	PA-11			WAS 21346-25
10562-31	7/8	.035	41 3/4	#1025 STL.	PA-11			WAS 21346-14
10562-32	7/8	.035	41 3/4	#1025 STL.	PA-11			WAS 21346-13
10562-33	5/8	.028	24	#1025 STL.	PA-11			WAS 21346-24
10562-34	5/8	.028	31 1/4	#1025 STL.	PA-11			WAS 21346-32
10562-35	5/8	.035	21 7/8	#1025 STL.	PA-11			WAS 21346-22
10562-36	5/8	.035	22	#1025 STL.	PA-11			WAS 21346-23
10562-37	3/4	.035	14 15/32	#4130 STL.	PA-11			WAS 21346-43
10562-38	5/8	.035	29 3/32	#1025 STL.	PA-11			WAS 21346-42
10562-39	5/8	.035	17	#1025 STL.	PA-11			WAS 21346-41
10562-40	3/4	.035	15 5/16	#4130 STL.	PA-11			WAS 21346-79
10562-41	1/2	.028	15	#1025 STL.	PA-11			WAS 21346-31
10562-42	7/8	.035	25 5/8	#4130 STL.	PA-11			WAS 21346-37
10562-43	3/4	.035	14 5/16	#1025 STL.	PA-11			WAS 21346-33
10562-44	7/8	.035	40	#4130 STL.	PA-11			WAS 21346-20
10562-45	3/4	.035	27 17/64	#4130 STL.	PA-11			WAS 21346-19
10562-46	3/4	.035	36	#4130 STL.	PA-11			WAS 21346-18
10562-47	3/4	.035	35 1/8	#4130 STL.	PA-11			WAS 21346-17
10562-48	1/2	.028	25 1/2	#1025 STL.	PA-11			WAS 21346-70
10562-49	1/2	.028	25 1/2	#1025 STL.	PA-11			WAS 21346-71
10562-50	1/2	.028	20 5/32	#1025 STL.	PA-11			WAS 21346-15
10562-51	1/2	.035	19	#1025 STL.	PA-11			WAS 21346-7
10562-52	5/8	.035	20 5/16	#1025 STL.	PA-11			WAS 21346-51
10562-53	1/2	.035	19 5/32	#4130 STL.	PA-11			WAS 21346-67
10562-54	1/2	.028	11 7/32	#1025 STL.	PA-11			WAS 21346-40
10562-55	5/8	.028	44 3/4	#1025 STL.	PA-11			WAS 21346-38
10562-56	1/2	.028	18 5/32	#1025 STL.	PA-11			WAS 21346-39
10562-57	5/8	.028	46 5/32	#1025 STL.	PA-11			WAS 21346-80
10562-58	5/8	.035	22 11/16	#1025 STL.	PA-11			WAS 21346-45
10562-59	3/4	.035	31 1/4	#1025 STL.	PA-11			WAS 21346-46
10562-60	1	.049	24 5/16	#4130 STL.	PA-11			WAS 21346-66
10562-61	3/4	.035	16	#4130 STL.	PA-11			WAS 21346-36
10562-62	3/4	.035	15 3/8	#4130 STL.	PA-11			WAS 21346-35
10562-63	1	.049	24 13/16	#4130 STL.	PA-11			WAS 21346-47
10562-64	1	.049	24 3/8	#4130 STL.	PA-11			WAS 21346-50
10562-65	1	.049	24 15/32	#4130 STL.	PA-11			WAS 21346-49
10562-66	3/4	.049	10 3/4	#4130 STL.	PA-11			
10562-67	5/8	.035	28 3/8	#1025 STL.	PA-11			WAS 21346-52
10562-68	5/8	.035	28 1/32	#1025 STL.	PA-11			WAS 21346-53
10562-69	3/4	.035	22 3/32	#4130 STL.	PA-11			WAS 21346-82
10562-70	3/4	.035	22 3/32	#4130 STL.	PA-11			WAS 21346-65
10562-71	1	.035	25 1/2	#4130 STL.	PA-11			
10562-72	3/4	.035	8 5/8	#4130 STL.	PA-11			
10562-73	5/8	.035	18	#4130 STL.				
10562-74	5/8	.035	18	#4130 STL.				
10562-75	5/8	.035	19 3/8	#1025 STL.				
10562-76	5/8	.035	18	#1025 STL.				
10562-77	5/8	.035	8 1/2	#1025 STL.				
10562-78	7/8	.035	39	#4130 STL.				
10562-79	7/8	.035	39	#4130 STL.				
10562-80	7/8	.035	24 3/4	#1025 STL.				
10562-81	7/8	.035	40	#1025 STL.				
10562-82	1	.049	24 3/4	#4130 STL.				
10562-83	3/4	.035	31 1/2	#1025 STL.				
10562-84	3/4	.035	31 1/2	#1025 STL.				
10562-85	3/4	.035	33	#1025 STL.				
10562-86	3/4	.035	33	#1025 STL.				
10562-87	5/8	.035	15 1/2	#1025 STL.				
10562-88	5/8	.035	15 1/2	#1025 STL.				
10562-89	3/4	.035	29 1/2	#1025 STL.				
10562-90	3/4	.035	29 1/2	#1025 STL.				
10562-91	5/8	.035	7 1/2	#1025 STL.				
10562-92	3/8	.028	21	#1025 STL.				
10562-93	3/8	.028	20 1/2	#1025 STL.				
10562-94	5/8	.028	29 1/2	#1025 STL.				
10562-95	5/8	.028	28 1/2	#1025 STL.				
10562-96	5/8	.035	20 13/32	#1025 STL.				
10562-97	7/8	.035	36	#4130 STL.				
10562-98	7/8	.035	36	#4130 STL.				
10562-99	7/8	.035	27 17/64	#4130 STL.				

NOTE:
TUBE ENDS NIBBLED OR CUT TO FIT.

LET.	REVISION	DATE	BY
B	-73 TO -99 INC. ADDED	2-4-49	R.M.
A	17 3/4 WAS 35 5/8 FOR -5	9-20-46	C.E.K.

THIS DRAWING IS THE PROPERTY OF THE PIPER AIRCRAFT CORP. AND ITS POSSESSION BY UNAUTHORIZED PERSONS SHALL NOT BE CONSTRUED AS PERMISSION TO REPRODUCE FOR SALE, IN WHOLE OR IN PART, ANY DEVICES SHOWN THEREON

MODEL	PER PLANE	NEXT ASSEMBLY	SUPERSEDES	SUP. BY
NOTED	NOTED	NOTED		

PIPER AIRCRAFT CORP.
LOCK HAVEN, PENNA.

PART No. | NO. REQ. | MATERIAL
SCALE | TOTAL WT.—LBS.
FINISH—PIPER SPECIFICATION #10
MANUFACTURING PRACTICES—PIPER SPECIFICATION #9

TUBES -FUSELAGE

DRAFTSMAN	CHECKER	STANDARDS
J.E.H. 4-22-46	E.E.T. 4-26-46	

10562

A703

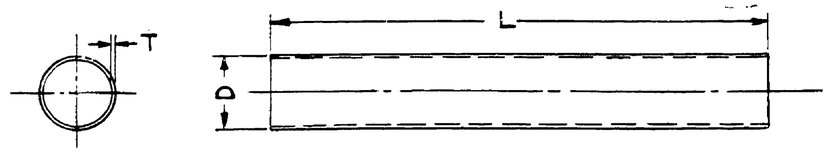

PART NO.	D	T	L	MATERIAL	MODEL	PER PLANE	NEXT ASSEMBLY	REMARKS
10562-2	5/8	.035	11 1/2	#4130 STL.	PA-11			
10562-3	5/8	.035	16 1/2	#4130 STL.	PA-11			
10562-4	5/8	.035	28 1/2	#4130 STL.	PA-N			
10562-5	5/8	.035	17 7/8	#1025 STL.	PA-11			WAS 21346-8
10562-6	5/8	.035	26 3/4	#1025 STL.	PA-N			WAS 21346-16
10562-7	7/8	.035	31 3/8	#1025 STL.	PA-11			WAS 21346-9
10562-8	7/8	.035	31 1/16	#1025 STL.	PA-11			WAS 21346-10
10562-9	7/8	.035	33 1/8	#1025 STL.	PA-N			WAS 21346-11
10562-10	7/8	.035	33 3/4	#1025 STL.	PA-11			WAS 21346-12
10562-11	7/8	.035	24	#1025 STL.	PA-N			WAS 21346-63
10562-12	1	.035	47 5/8	#4130 STL.	PA-11			WAS 21346-62
10562-13	5/8	.035	32 1/16	#1025 STL.	PA-11			WAS 21346-61
10562-14	5/8	.035	23 3/32	#1025 STL.	PA-N			WAS 21346-60
10562-15	5/8	.028	46 19/32	#1025 STL.	PA-N			WAS 21346-56
10562-16	5/8	.028	31 5/8	#1025 STL.	PA-11			WAS 21346-29
10562-17	1/2	.028	28	#1025 STL.	PA-11			WAS 21346-59
10562-18	1/2	.028	17 23/32	#1025 STL.	PA-N			WAS 21346-58
10562-19	5/8	.028	43 3/8	#1025 STL.	PA-N			WAS 21346-55
10562-20	1/2	.028	21 3/8	#1025 STL.	PA-N			WAS 21346-57
10562-21	3/4	.049	9 1/8	#4130 STL.	PA-11			WAS 21346-54
10562-22	1/2	.028	9	#1025 STL.	PA-N			WAS 21346-78
10562-23	1/2	.028	9	#1025 STL.	PA-11			WAS 21346-77
10562-24	1/2	.028	10 3/8	#1025 STL.	PA-11			WAS 21346-76
10562-25	1/2	.028	10 1/32	#1025 STL.	PA-N			WAS 21346-75
10562-26	5/8	.028	31 5/8	#1025 STL.	PA-N			WAS 21346-30
10562-27	5/8	.028	18 3/32	#1025 STL.	PA-11			WAS 21346-28
10562-28	5/8	.028	32 5/16	#1025 STL.	PA-11			WAS 21346-27
10562-29	5/8	.028	21 23/32	#1025 STL.	PA-N			WAS 21346-26
10562-30	5/8	.028	34	#1025 STL.	PA-11			WAS 21346-25
10562-31	7/8	.035	41 3/4	#1025 STL.	PA-11			WAS 21346-14
10562-32	7/8	.035	41 3/4	#1025 STL.	PA-N			WAS 21346-13
10562-33	5/8	.028	24	#1025 STL.	PA-N			WAS 21346-24
10562-34	5/8	.028	31 1/4	#1025 STL.	PA-11			WAS 21346-32
10562-35	5/8	.035	21 1/8	#1025 STL.	PA-11			WAS 21346-22
10562-36	5/8	.035	22	#1025 STL.	PA-N			WAS 21346-23
10562-37	3/4	.035	14 5/32	#4130 STL.	PA-11			WAS 21346-43
10562-38	5/8	.035	29 31/32	#1025 STL.	PA-11			WAS 21346-42
10562-39	5/8	.035	17	#1025 STL.	PA-11			WAS 21346-41
10562-40	3/4	.035	15 5/16	#4130 STL.	PA-11			WAS 21346-79
10562-41	1/2	.028	15	#1025 STL.	PA-11			WAS 21346-31
10562-42	7/8	.035	25 3/8	#4130 STL.	PA-11			WAS 21346-37
10562-43	3/4	.035	14 5/16	#1025 STL.	PA-11			WAS 21346-33
10562-44	7/8	.035	40	#4130 STL.	PA-11			WAS 21346-20
10562-45	3/4	.035	27 7/64	#4130 STL.	PA-11			WAS 21346-19
10562-46	3/4	.035	36	#4130 STL.	PA-11			WAS 21346-18
10562-47	3/4	.035	35 1/8	#4130 STL.	PA-11			WAS 21346-17
10562-48	1/2	.028	25 1/2	#1025 STL.	PA-11			WAS 21346-70
10562-49	1/2	.028	25 1/2	#1025 STL.	PA-11			WAS 21346-71
10562-50	1/2	.028	20 9/32	#1025 STL.	PA-11			WAS 21346-15
10562-51	1/2	.035	19	#1025 STL.	PA-11			WAS 21346-7
10562-52	7/8	.035	20 5/16	#1025 STL.	PA-11			WAS 21346-51
10562-53	1/2	.035	19 5/32	#4130 STL.	PA-11			WAS 21346-67
10562-54	1/2	.028	11 7/32	#1025 STL.	PA-11			WAS 21346-40
10562-55	5/8	.028	44 3/4	#1025 STL.	PA-N			WAS 21346-38
10562-56	1/2	.028	18 5/32	#1025 STL.	PA-N			WAS 21346-39
10562-57	5/8	.028	46 3/32	#1025 STL.	PA-N			WAS 21346-80
10562-58	5/8	.035	22 1/16	#1025 STL.	PA-N			WAS 21346-45
10562-59	3/4	.035	31 1/4	#1025 STL.	PA-11			WAS 21346-46
10562-60	1	.049	24 5/16	#4130 STL.	PA-11			WAS 21346-66
10562-61	3/4	.035	16	#4130 STL.	PA-N			WAS 21346-36
10562-62	3/4	.035	15 3/8	#4130 STL.	PA-N			WAS 21346-35
10562-63	1	.049	24 15/16	#4130 STL.	PA-11			WAS 21346-47
10562-64	1	.049	24 3/8	#4130 STL.	PA-N			WAS 21346-50
10562-65	1	.049	24 15/32	#4130 STL.	PA-N			WAS 21346-49
10562-66	3/4	.049	10 3/4	#4130 STL.	PA-11			
10562-67	5/8	.035	28 3/8	#1025 STL.	PA-11			WAS 21346-52
10562-68	5/8	.035	28 17/32	#1025 STL.	PA-11			WAS 21346-53
10562-69	3/4	.035	22 3/32	#4130 STL.	PA-N			WAS 21346-82
10562-70	3/4	.035	22 3/32	#4130 STL.	PA-11			WAS 21346-65
10562-71	1	.035	25 1/2	#4130 STL.	PA-11			
10562-72	3/4	.035	8 5/8	#4130 STL.	PA-11			
10562-73	5/8	.035	18	#4130 STL.				
10562-74	5/8	.035	18	#4130 STL.				
10562-75	5/8	.035	19 3/8	#1025 STL.				
10562-76	5/8	.035	18	#1025 STL.				
10562-77	5/8	.035	8 1/2	#1025 STL.				
10562-78	7/8	.035	39	#4130 STL.				
10562-79	7/8	.035	39	#4130 STL.				
10562-80	7/8	.035	24 3/4	#1025 STL.				
10562-81	7/8	.035	40	#1025 STL.				
10562-82	1	.049	24 3/4	#4130 STL.				
10562-83	3/4	.035	31 1/2	#1025 STL.				
10562-84	3/4	.035	31 1/2	#1025 STL.				
10562-85	3/4	.035	33	#1025 STL.				
10562-86	3/4	.035	33	#1025 STL.				
10562-87	5/8	.035	15 1/2	#1025 STL.				
10562-88	5/8	.035	15 1/2	#1025 STL.				
10562-89	3/4	.035	29 1/2	#1025 STL.				
10562-90	3/4	.035	29 1/2	#1025 STL.				
10562-91	5/8	.035	7 1/2	#1025 STL.				
10562-92	3/8	.028	21	#1025 STL.				
10562-93	3/8	.028	20 1/2	#1025 STL.				
10562-94	5/8	.028	29 1/2	#1025 STL.				
10562-95	5/8	.028	28 1/2	#1025 STL.				
10562-96	5/8	.035	20 19/32	#1025 STL.				
10562-97	7/8	.035	36	#4130 STL.				
10562-98	7/8	.035	36	#4130 STL.				
10562-99	7/8	.035	27 7/64	#4130 STL.				

NOTE:
TUBE ENDS NIBBLED OR CUT TO FIT.

LET.	REVISION	DATE	BY
B	-73 TO -99 INC ADDED	2-4-46	RM.
A	17 3/4 WAS 35 5/8 FOR -5	9-20-46	C.E.K.

THIS DRAWING IS THE PROPERTY OF THE PIPER AIRCRAFT CORP. AND ITS POSSESSION BY UNAUTHORIZED PERSONS SHALL NOT BE CONSTRUED AS PERMISSION TO REPRODUCE FOR SALE, IN WHOLE OR IN PART, ANY DEVICES SHOWN THEREON

NOTED MODEL	NOTED PER PLANE	NOTED NEXT ASSEMBLY	SUPERSEDES	SUP. BY

PIPER AIRCRAFT CORP.
LOCK HAVEN, PENNA.

PART NO. | NO. REQ. | MATERIAL
SCALE | TOTAL WT.—LBS.
FINISH—PIPER SPECIFICATION #10
MANUFACTURING PRACTICES—PIPER SPECIFICATION #9

TUBES - FUSELAGE

DRAFTSMAN	CHECKER	STANDARDS
J.E.H. 4-22-46	C.E.K. 4-26-46	

10562

703

A703

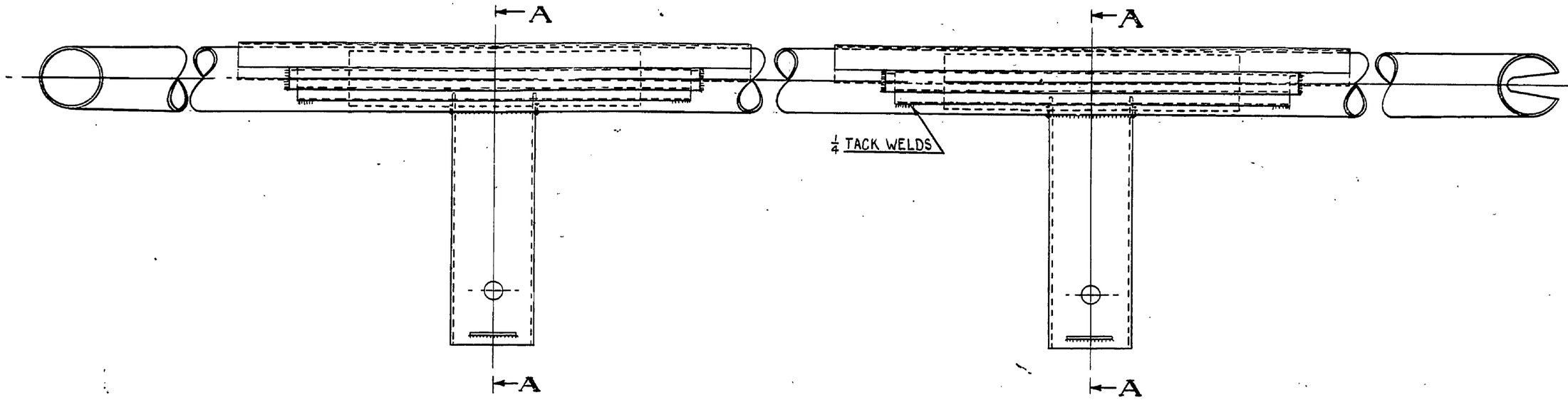

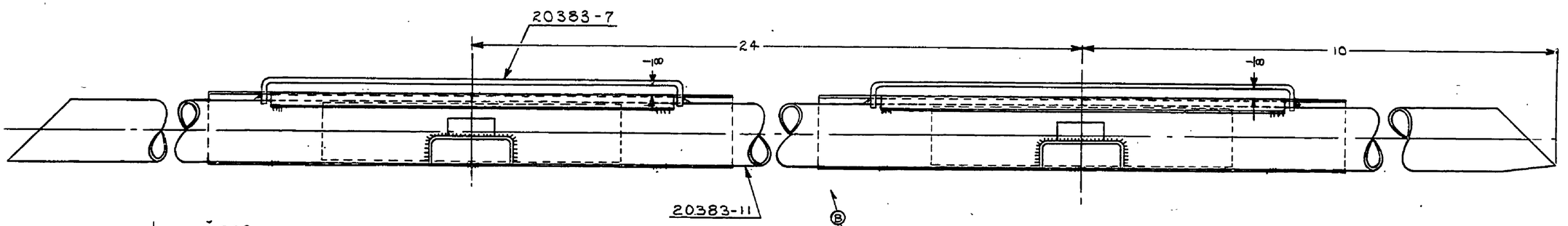

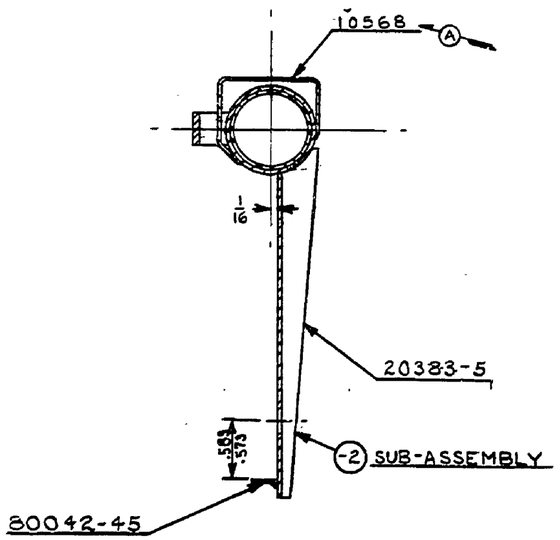

SECTION A-A

-2	-	SUB-ASS'Y. CONSISTS OF 80042-45&20383-5	
80042-45	2	PLATE	
20383-11	1	LONGERON ASS'Y.	
20383-7	2	GUIDE	
20383-5	2	BRACKET	
10568	2	THROTTLE LEVER GUIDE	
	NO. REQ.	NAME	
PART No.		MATERIAL	

SCALE FULL SIZE — TOTAL WT.-LBS.

FINISH—PIPER SPECIFICATION #10

MANUFACTURING PRACTICES—PIPER SPECIFICATION #9

THIS DRAWING IS THE PROPERTY OF THE PIPER AIRCRAFT CORP. AND ITS POSSESSION BY UNAUTHORIZED PERSONS SHALL NOT BE CONSTRUED AS PERMISSION TO REPRODUCE FOR SALE, IN WHOLE OR IN PART, ANY DEVICES SHOWN THEREON

PLAN

MODEL	PER PLANE	NEXT ASSEMBLY	SUPERSEDES	SUP. BY

LET.	REVISION	DATE	BY
B	FRONT VIEW REVISED	6-28-51	C.B.
A	VIEWS OF 10568 REVISED	11-25-46	H.M.

PIPER AIRCRAFT CORP.
LOCK HAVEN, PENNA.

BRACKET ASSEMBLY — FUSELAGE THROTTLE

DRAFTSMAN	CHECKER	STANDARDS
H.M.Z. 4-12-46	D.C.T. 4-17-46	

10565

A704

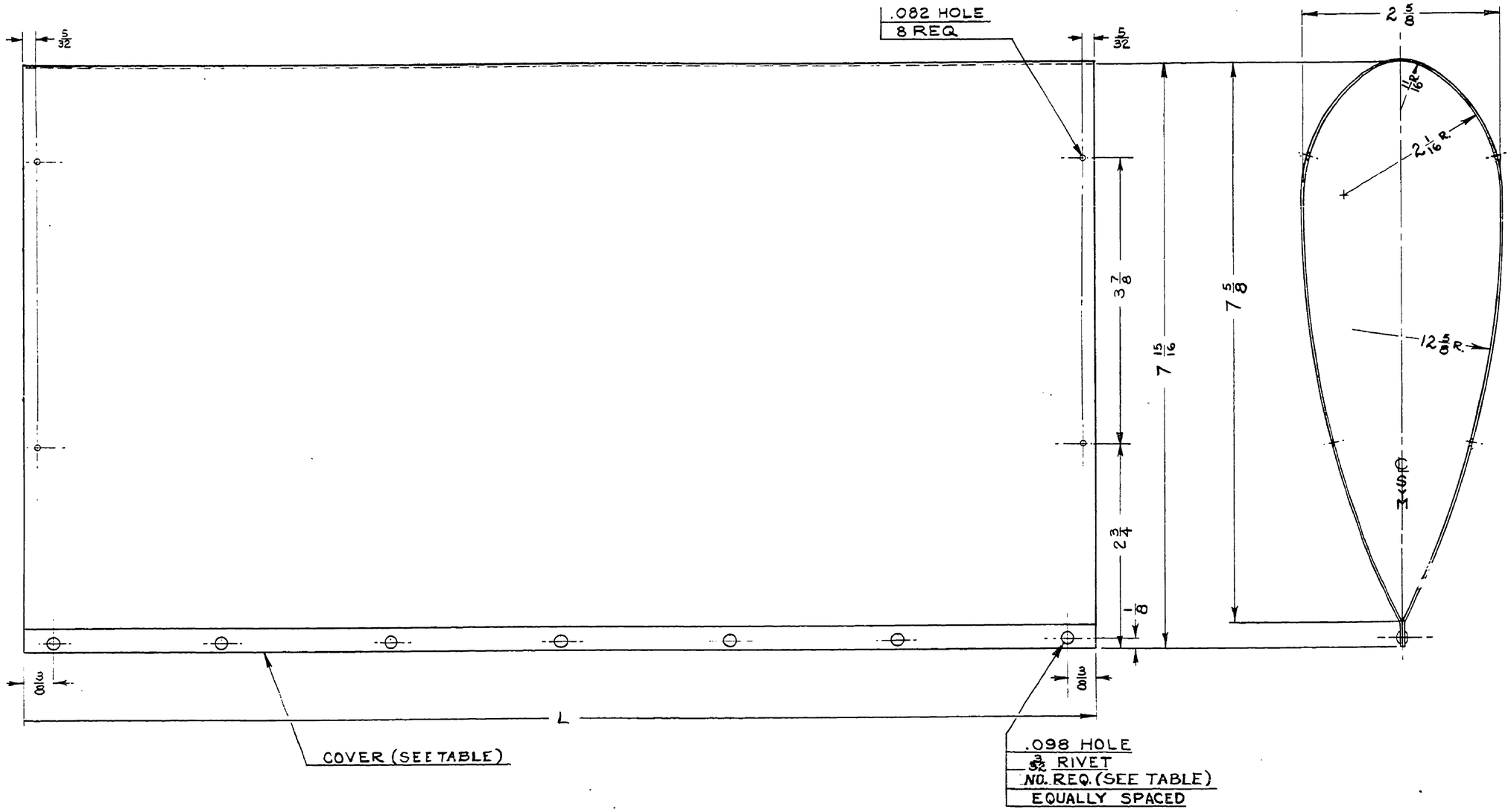

ASSY. NO.	COVER NO.	L	RIVETS REQ.
10566	10566-2	14	7
10566-3	10566-4	12	7
10566-5	10566-6	16 3/4	8

PART NO.	NO. REQ.	SIZE	DESCRIPTION MATERIAL
-6	1	.020 × 16 3/4 × 17 7/8	3S-½ H. ALUM. (ON 10566-5 ONLY)
	8	3/32 × 9/64 L	STL. TUB. CAD. PLATED RIVET (ON 10566-5 ONLY)
	7		(ON 10566 & 10566-3 ONLY)
-4	1	.020 × 12 × 17 7/8	3S-½ H. ALUM. (ON 10566-3 ONLY)
-2	1	.020 × 14 × 17 7/8	3S-½ H. ALUM. (ON 10566 ONLY)

SCALE FULL SIZE — TOTAL WT.—LBS.

FINISH—PIPER SPECIFICATION #10

MANUFACTURING PRACTICES—PIPER SPECIFICATION #9

COVER ASSEMBLY - SHOCK CORD

THIS DRAWING IS THE PROPERTY OF THE PIPER AIRCRAFT CORP. AND ITS POSSESSION BY UNAUTHORIZED PERSONS SHALL NOT BE CONSTRUED AS PERMISSION TO REPRODUCE FOR SALE, IN WHOLE OR IN PART, ANY DEVICES SHOWN THEREON

LET.	REVISION	DATE	BY
A	-3, -4, -5 & -6 ADDED	3-3-50	HRK

MODEL	PER PLANE	NEXT ASSEMBLY	SUPERSEDES	SUP. BY

PIPER AIRCRAFT CORP.
LOCK HAVEN, PENNA.

DRAFTSMAN	CHECKER	STANDARDS
C. L. W. 4-9-46	R. E. T. 4-10-46	

10566

A

705

A705

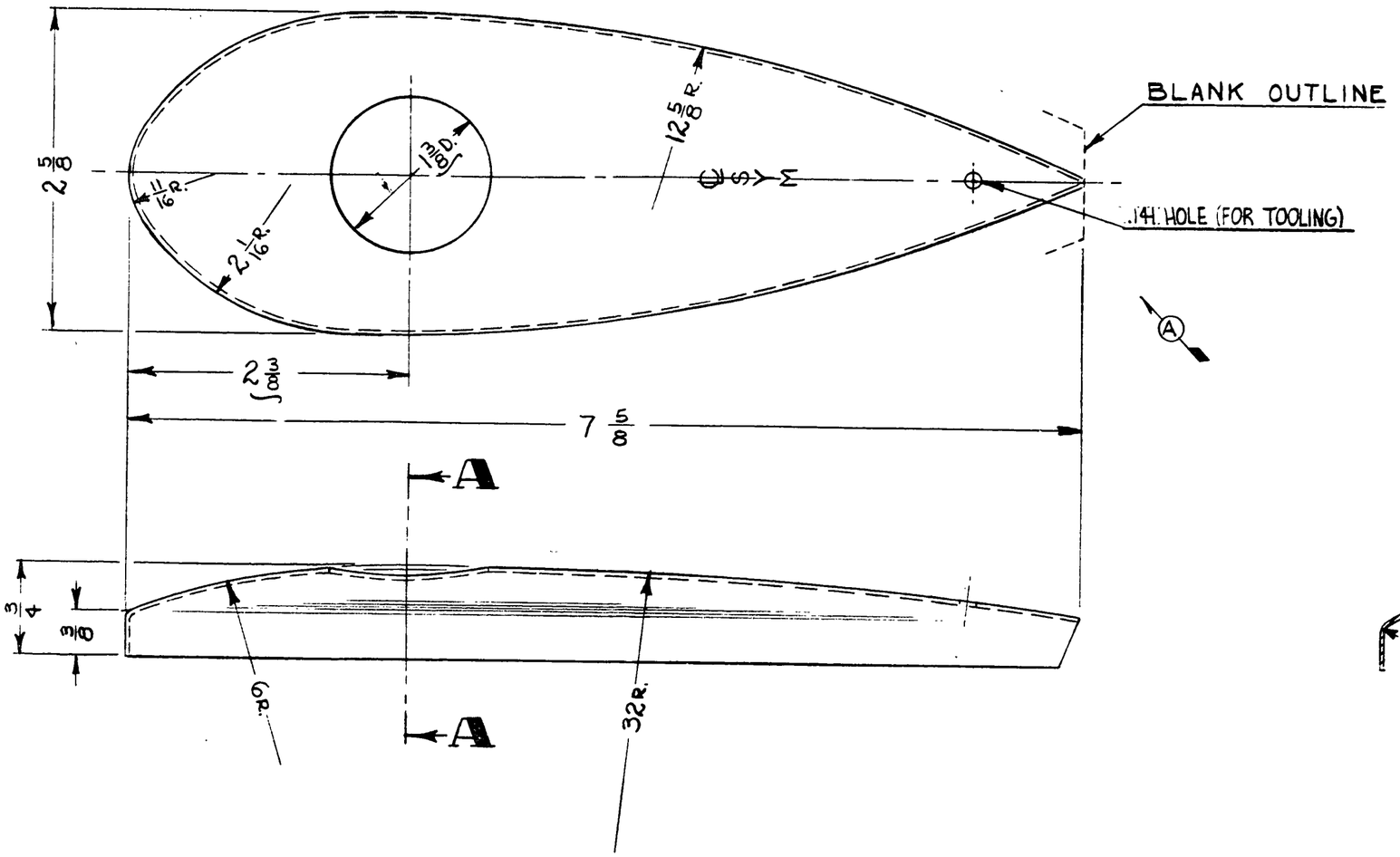

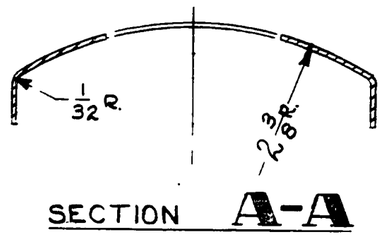

SECTION A-A

THIS DRAWING IS THE PROPERTY OF THE PIPER AIRCRAFT CORP. AND ITS POSSESSION BY UNAUTHORIZED PERSONS SHALL NOT BE CONSTRUED AS PERMISSION TO REPRODUCE FOR SALE, IN WHOLE OR IN PART, ANY DEVICES SHOWN THEREON

LET.	REVISION	DATE	BY
A	.141 HOLE ADDED	3-17-47	L.R.

MODEL	PER PLANE	NEXT ASSEMBLY	SUPERSEDES	SUP. BY

PIPER AIRCRAFT CORP.
LOCK HAVEN, PENNA.

PART NO.	NO. REQ.	SIZE	DESCRIPTION
		.032 x 3½ x 8¼	3S - ½ H. ALUM.
			MATERIAL

SCALE FULL SIZE — TOTAL WT.—LBS.

FINISH—PIPER SPECIFICATION #10

MANUFACTURING PRACTICES—PIPER SPECIFICATION #9

PLATE - SHOCK CORD COVER END

DRAFTSMAN	CHECKER	STANDARDS
C. L. Wo 4-10-46	R.E.T. 4-10-46	

10567

422

A422

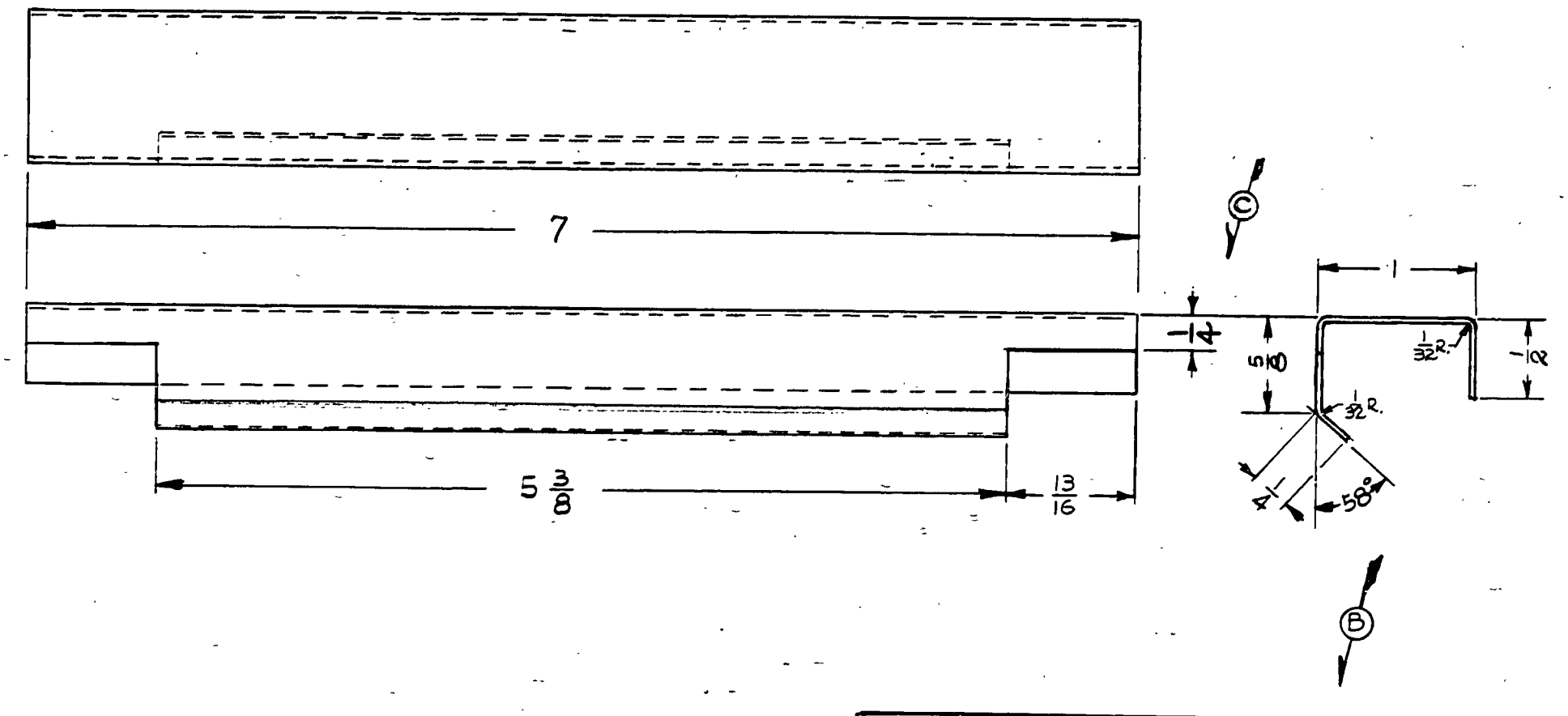

C	1/4 WAS 5/8	2-20-47	BC	MODEL	PER PLANE	NEXT ASSEMBLY	SUPERSEDES	SUP. BY	
B	H.R. STEEL WAS "1025 STEEL	11-27-46	E.L.N.						
A	REDRAWN & REVISED	11-21-46	C.E.K.						
LET.	REVISION	DATE	BY						

THIS DRAWING IS THE PROPERTY OF THE PIPER AIRCRAFT CORP. AND ITS POSSESSION BY UNAUTHORIZED PERSONS SHALL NOT BE CONSTRUED AS PERMISSION TO REPRODUCE FOR SALE, IN WHOLE OR IN PART, ANY DEVICES SHOWN THEREON.

PIPER AIRCRAFT CORP.
LOCK HAVEN, PENNA.

PART No.	No. REQ.	SIZE	DESCRIPTION
		.020 x 2 3/8 x 7	H.R. STEEL
		MATERIAL	

SCALE FULL SIZE — TOTAL WT.—LBS.

FINISH—PIPER SPECIFICATION #10

MANUFACTURING PRACTICES—PIPER SPECIFICATION #9

GUIDE - THROTTLE LEVER

DRAFTSMAN	CHECKER	STANDARDS
C.E.K. 11-21-46	R. D. M. 11-22-46	

10568

PENCILTEX A. & B. SMITH CO., PGH., PA.

23

A 23

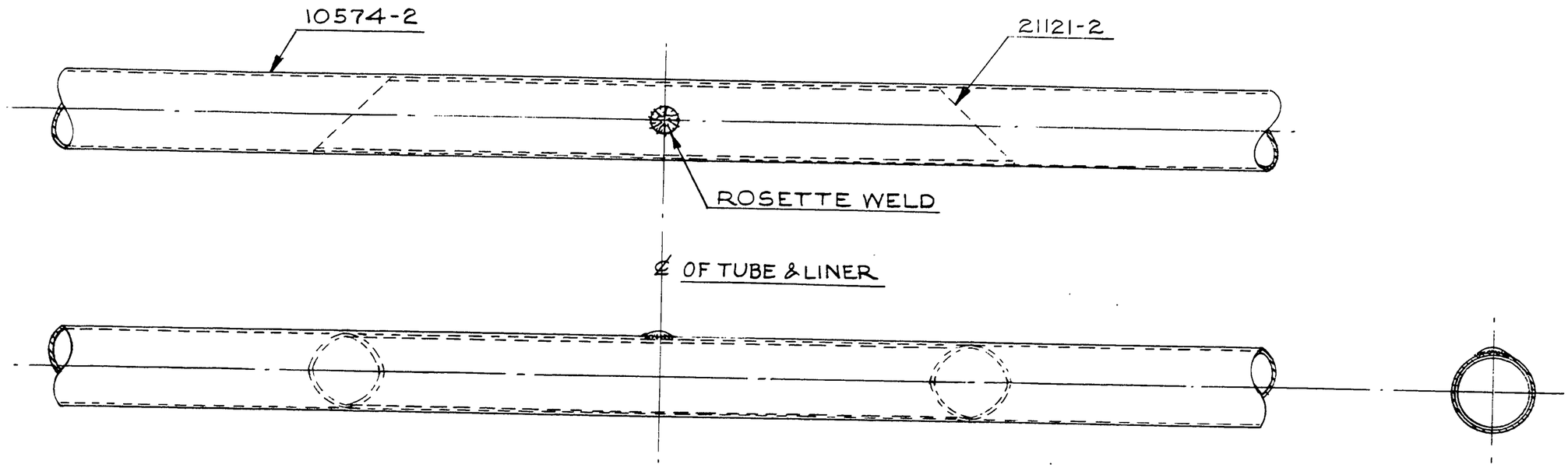

LET.	REVISION	DATE	BY

MODEL	PER PLANE	NEXT ASSEMBLY	SUPERSEDES	SUP. BY
J5	1	24008		

THIS DRAWING IS THE PROPERTY OF THE PIPER AIRCRAFT CORP. AND ITS POSSESSION BY UNAUTHORIZED PERSONS SHALL NOT BE CONSTRUED AS PERMISSION TO REPRODUCE FOR SALE, IN WHOLE OR IN PART, ANY DEVICES SHOWN THEREON.

PIPER AIRCRAFT CORP.
LOCK HAVEN, PENNA.

PART No.	No. REQ.	NAME / MATERIAL
21121-2	1	LINER
10574-2	1	TUBE

SCALE FULL SIZE | TOTAL WT.–LBS.

FINISH—PIPER SPECIFICATION #10

MANUFACTURING PRACTICES—PIPER SPECIFICATION #9

TUBE ASSEMBLY

DRAFTSMAN	CHECKER	STANDARDS
C.E.K. 4-15-46	P.E.T. 4-15-46	

10569

423

A423

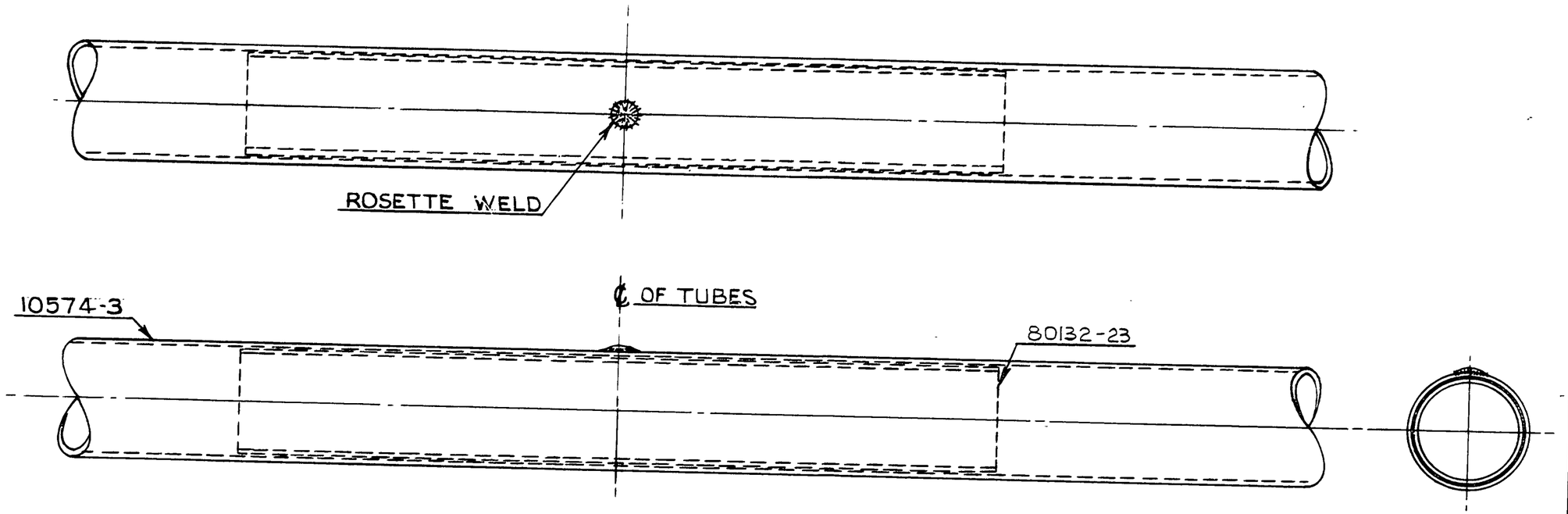

PART No.	No. REQ.	NAME / MATERIAL
80132-23	1	TUBE
10574-3	1	TUBE

SCALE FULL SIZE — TOTAL WT.—LBS.

FINISH—PIPER SPECIFICATION #10

MANUFACTURING PRACTICES—PIPER SPECIFICATION #9

MODEL	PER PLANE	NEXT ASSEMBLY	SUPERSEDES	SUP. BY
J3	1	Z4006		

THIS DRAWING IS THE PROPERTY OF THE PIPER AIRCRAFT CORP. AND ITS POSSESSION BY UNAUTHORIZED PERSONS SHALL NOT BE CONSTRUED AS PERMISSION TO REPRODUCE FOR SALE, IN WHOLE OR IN PART, ANY DEVICES SHOWN THEREON.

LET.	REVISION	DATE	BY

PIPER AIRCRAFT CORP.
LOCK HAVEN, PENNA.

TUBE ASSEMBLY

DRAFTSMAN	CHECKER	STANDARDS
BBC 4-12-46	R.E.T. 4-15-46	

10570

424

A424

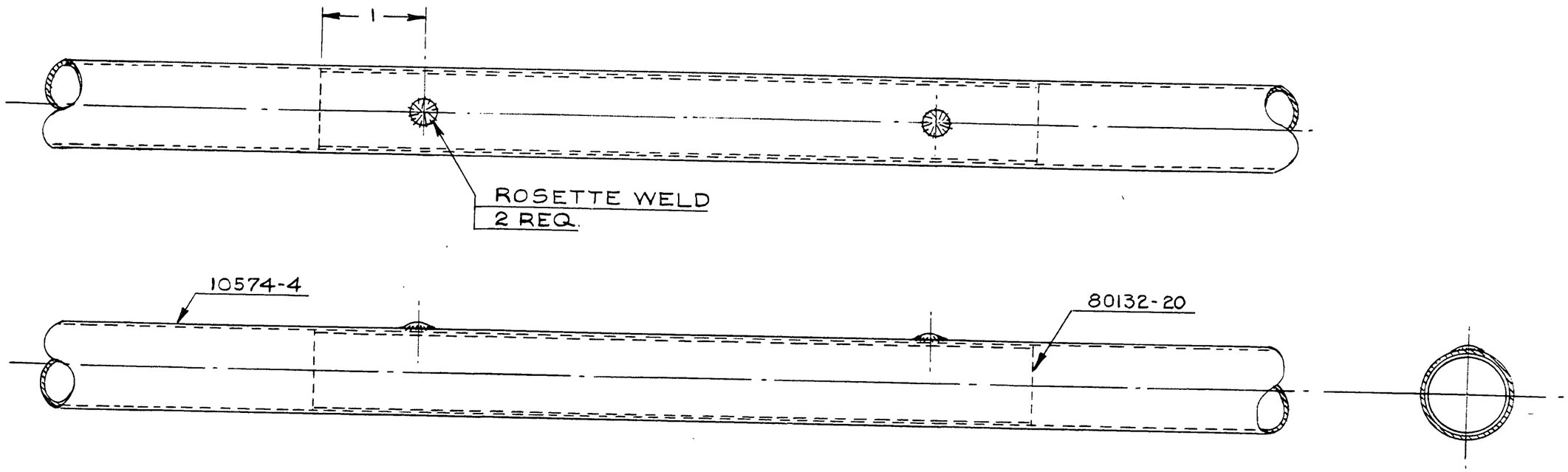

LET.	REVISION	DATE	BY						

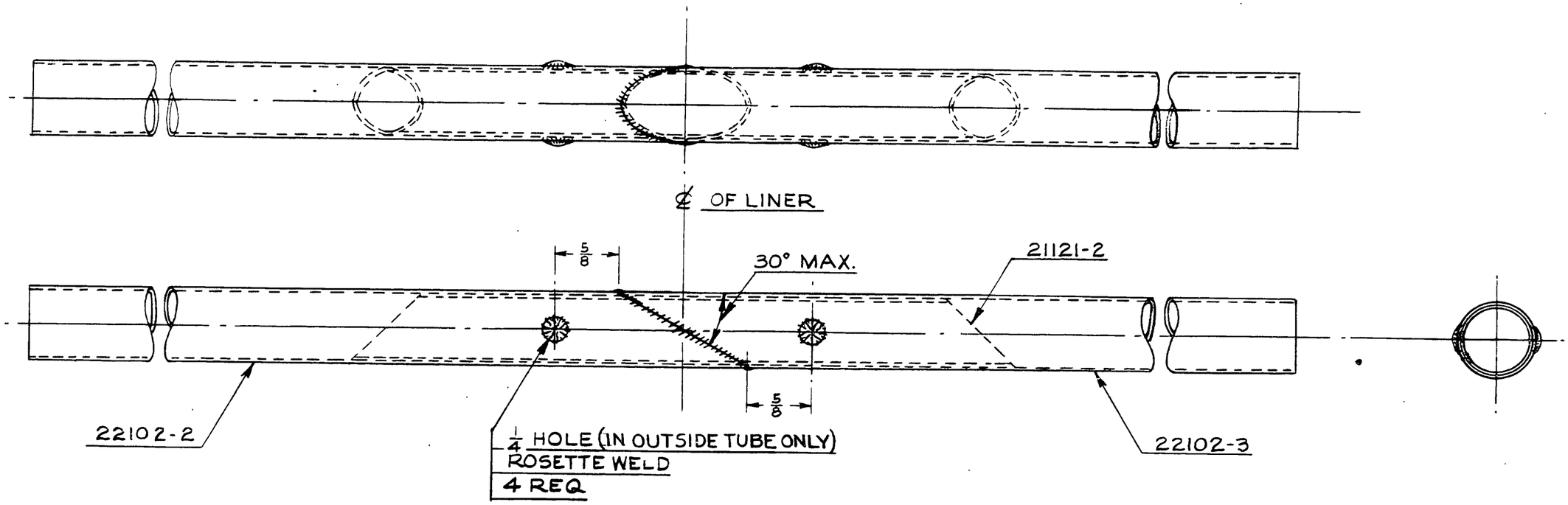

NOTE:
BLANK LENGTHS SHOWN.
ENDS CUT OR NIBBLED TO FIT.

"This drawing is the property of the Piper Aircraft Corp. and its possession by unauthorized persons shall not be construed as permission to reproduce for sale, in whole or in part, any devices shown thereon."

PART No.	No. REQ.	NAME / MATERIAL
22102-3	1	TUBE
22102-2	1	TUBE
21121-2	1	LINER

SCALE FULL SIZE | TOTAL WT.—LBS.
FINISH—PIPER SPECIFICATION #10
MANUFACTURING PRACTICES—PIPER SPECIFICATION #9

LONGERON ASSEMBLY

MODEL	PER PLANE	NEXT ASSEMBLY	SUPERSEDES	SUP. BY
J4	2	21346		
J4C	2	20879		

LET.	REVISION	DATE	BY

PIPER AIRCRAFT CORP.
LOCK HAVEN, PENNA.

DRAFTSMAN	CHECKER	STANDARDS
C.E.K. 4-11-46	R.E.T. 4-12-46	

10572

426.

A426

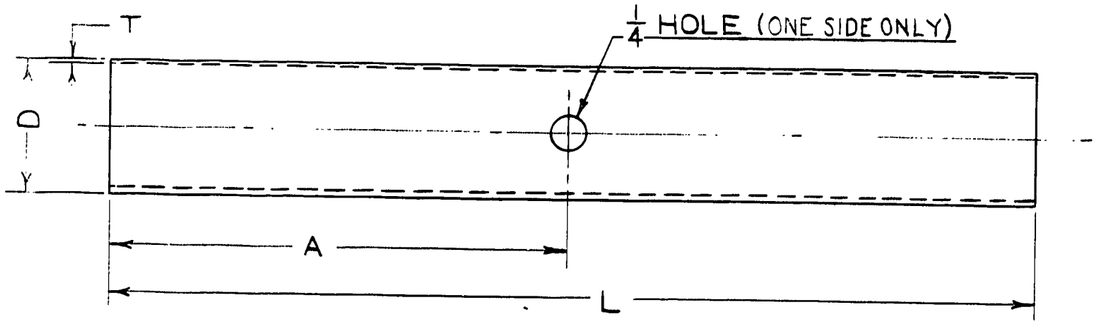

TYPE 1

BLANK LENGTHS SHOWN.
ENDS NIBBLED OR CUT TO FIT.

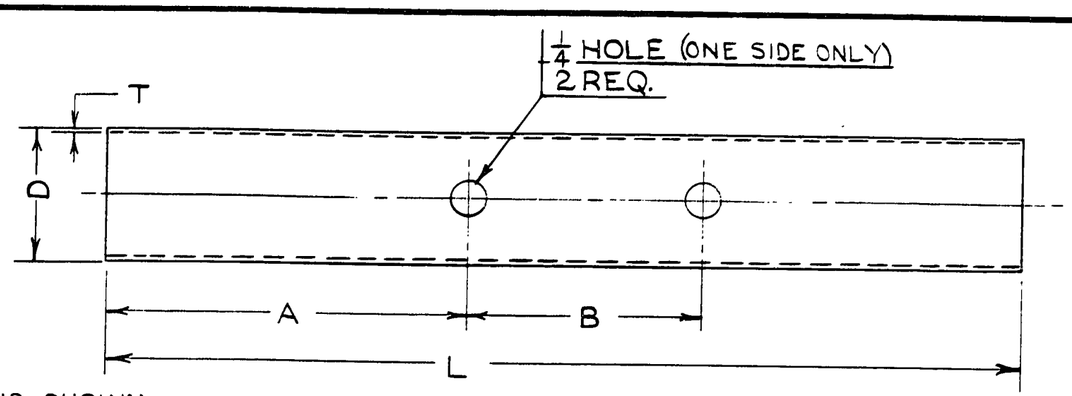

TYPE 2

PART NO.	TYPE	A	B	D	L	T	MATERIAL	MODEL	PER PLANE	NEXT ASS'Y.	REMARKS
10574-2	1	15 27/32	—	3/4	31 11/16	.035	*4130 STEEL SEAMLESS TUBE	J3	1	10569	WAS 21346-34
10574-3	1	12 13/16	—	1 1/8	24 13/16	.049	*4130 STEEL SEAMLESS TUBE	J3	1	10570	WAS 21346-48
10574-4	2	18 3/16	5	7/8	40 1/8	.035	*4130 STEEL SEAMLESS TUBE	J3	1	10571	WAS 21346-21

LET.	REVISION	DATE	BY

NOTED	NOTED	NOTED		
MODEL	PER PLANE	NEXT ASSEMBLY	SUPERSEDES	SUP. BY

THIS DRAWING IS THE PROPERTY OF THE PIPER AIRCRAFT CORP. AND ITS POSSESSION BY UNAUTHORIZED PERSONS SHALL NOT BE CONSTRUED AS PERMISSION TO REPRODUCE FOR SALE, IN WHOLE OR IN PART. ANY DEVICES SHOWN THEREON.

PIPER AIRCRAFT CORP.
LOCK HAVEN, PENNA.

NOTED

PART No. | No. REQ. | MATERIAL

SCALE | TOTAL WT.—LBS.

FINISH—PIPER SPECIFICATION #10

MANUFACTURING PRACTICES—PIPER SPECIFICATION #9

TUBE - FUSELAGE

DRAFTSMAN	CHECKER	STANDARDS
BBC 4-15-46	R.E.T. 4-16-46	

10574

427

A427

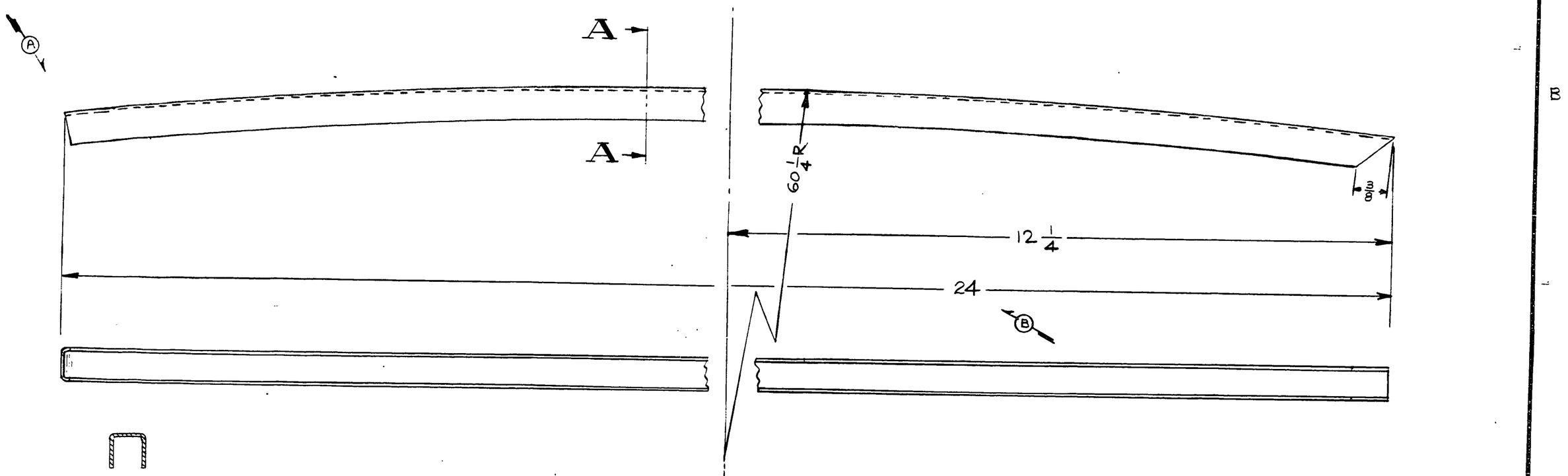

THIS DRAWING IS THE PROPERTY OF THE PIPER AIRCRAFT CORP. AND ITS POSSESSION BY UNAUTHORIZED PERSONS SHALL NOT BE CONSTRUED AS PERMISSION TO REPRODUCE FOR SALE, IN WHOLE OR IN PART. ANY DEVICES SHOWN THEREON.

LET.	REVISION	DATE	BY
B	24 5/8 DIM. REM; 24 WAS 24 5/16	10-31-46	I.D.B.
A	END REV., 1/16 R., 19/32 & 30° DIM. REM.	10-31-46	I.D.B.

MODEL	PER PLANE	NEXT ASSEMBLY	SUPERSEDES	SUP. BY

PIPER AIRCRAFT CORP.
LOCK HAVEN, PENNA.

84501	DWG REF. ONLY	CHANNEL SECTION
		24 3/16 L. PIPER SECTION 84501-2
PART No.	No. REQ.	SIZE DESCRIPTION
		MATERIAL
SCALE FULL SIZE		TOTAL WT.—LBS.
FINISH—PIPER SPECIFICATION #10		
MANUFACTURING PRACTICES—PIPER SPECIFICATION #9		

CHANNEL — FUSELAGE SIDE

DRAFTSMAN	CHECKER	STANDARDS	
C.E.K. 5-3-46	K.E.T. 5-6-46		10613

428

A428

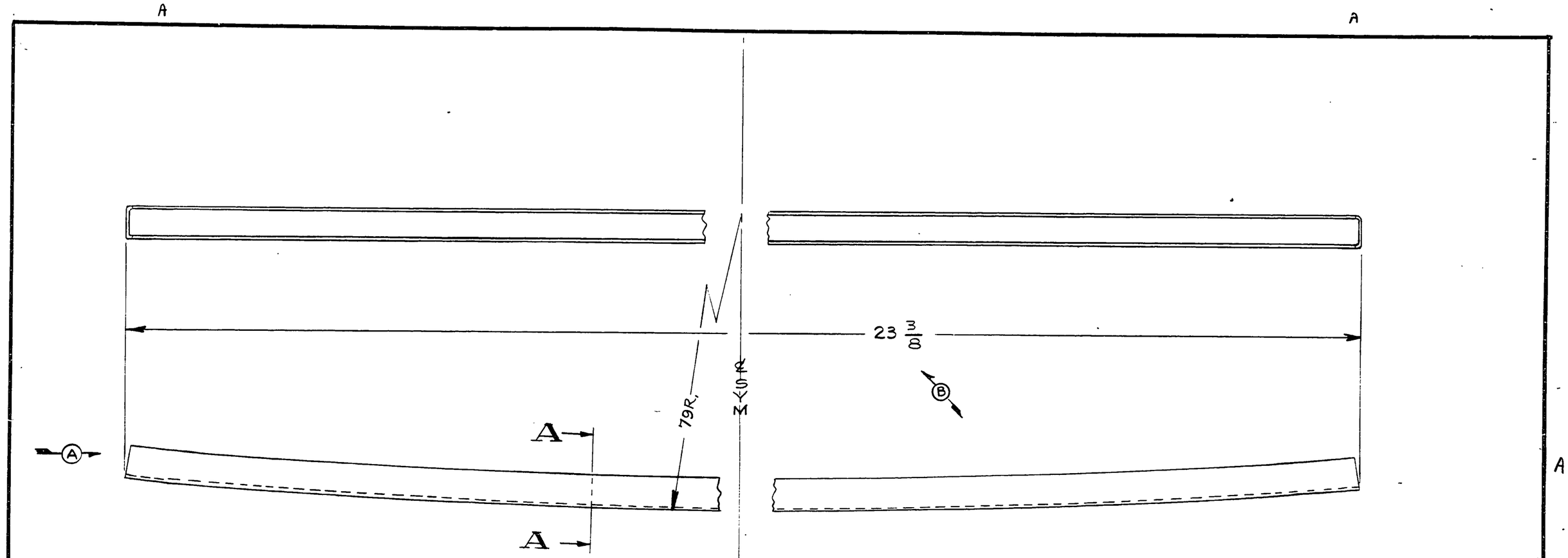

SECTION A-A

B	23 3/8 WAS 23 5/8	10-31-46	I.D.B.	
A	ENDS REV. 11/16 R. 30° & 11/32 DIM. REM.	10-31-46	I.D.B.	
LET.	REVISION	DATE	BY	

THIS DRAWING IS THE PROPERTY OF THE PIPER AIRCRAFT CORP. AND ITS POSSESSION BY UNAUTHORIZED PERSONS SHALL NOT BE CONSTRUED AS PERMISSION TO REPRODUCE FOR SALE, IN WHOLE OR IN PART, ANY DEVICES SHOWN THEREON.

MODEL	PER PLANE	NEXT ASSEMBLY	SUPERSEDES	SUP. BY

PIPER AIRCRAFT CORP.
LOCK HAVEN, PENNA.

84501	DWG FILE ONLY	CHANNEL SECTION	
		23 1/2 L	PIPER SECTION 84501-2
PART No.	No. REQ.	SIZE	DESCRIPTION
		MATERIAL	
SCALE FULL SIZE		TOTAL WT.–LBS.	
FINISH–PIPER SPECIFICATION #10			
MANUFACTURING PRACTICES–PIPER SPECIFICATION #9			

CHANNEL-FUSELAGE BOTTOM

DRAFTSMAN	CHECKER	STANDARDS	
C.E.K. 5-6-46	E.E.J. 5-6-46		10614

429

A429

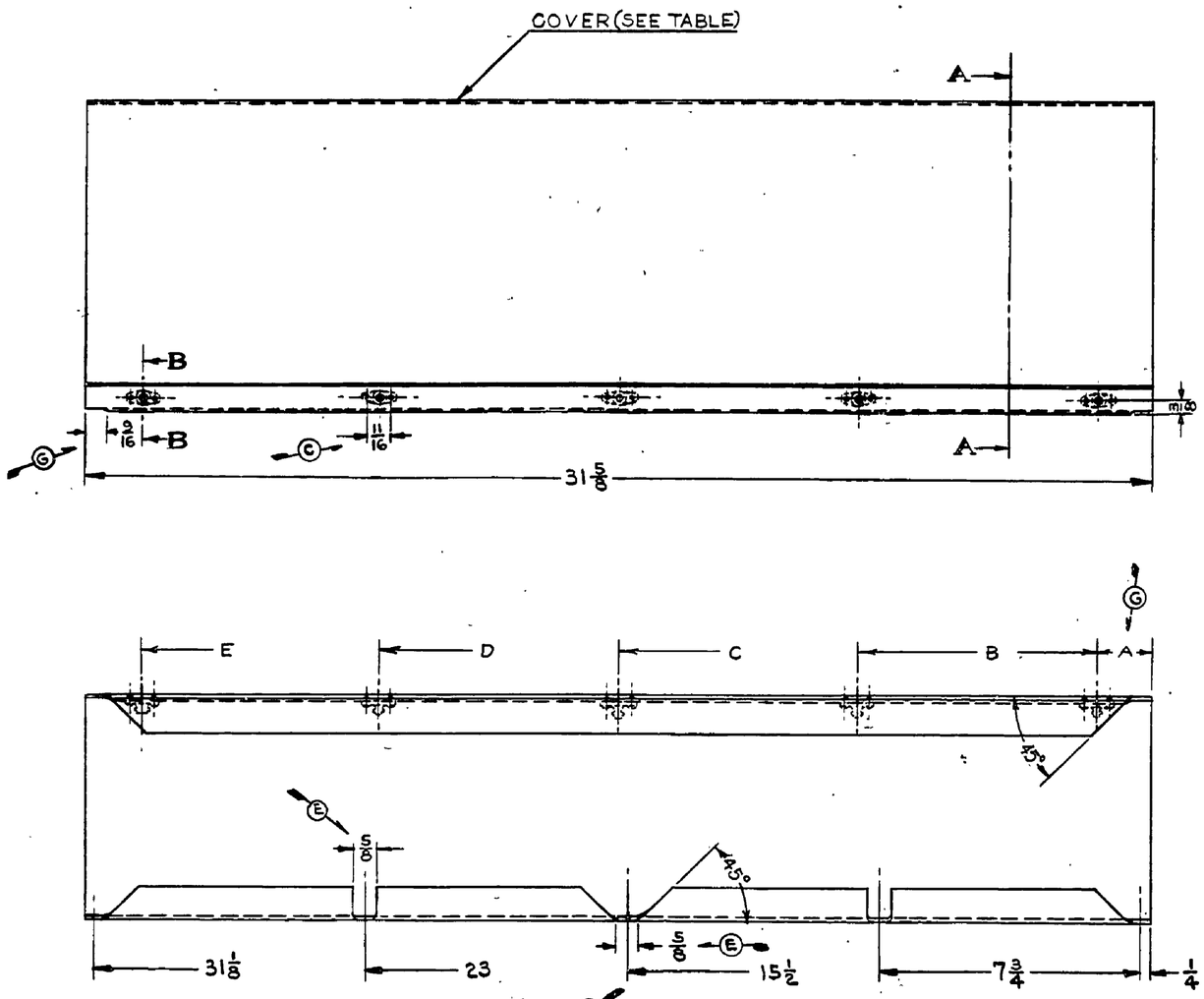

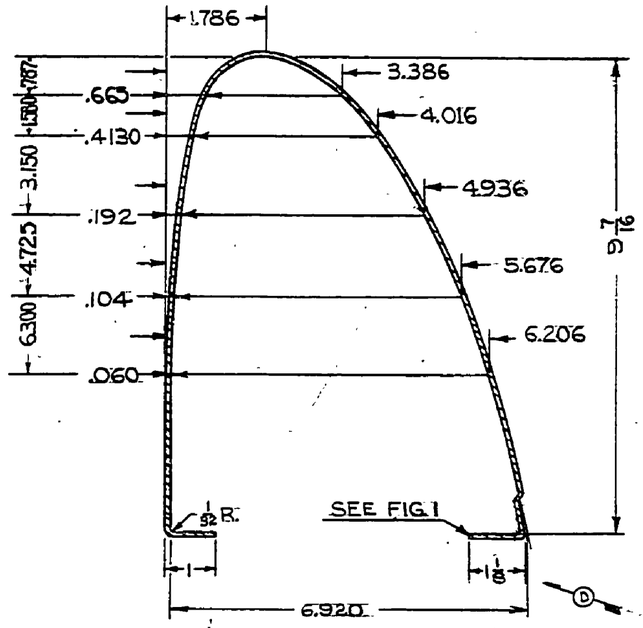

SECTION A-A
6 IN.-1 FT.

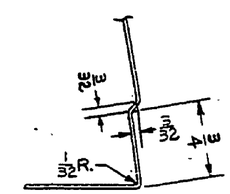

FIG. 1
FULL SIZE

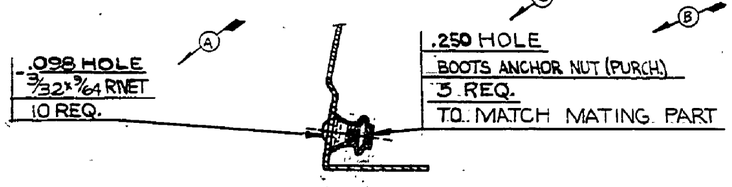

SECTION B-B
FULL SIZE

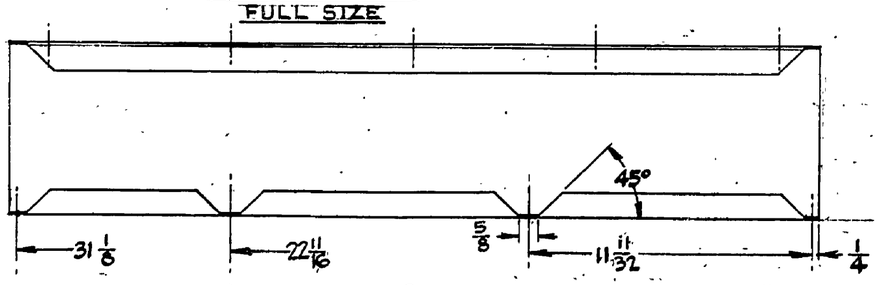

FIG. 2
12 IB CUTOUTS FOR -3 & -7 (SHOWN) & -6 (OPPOSITE)
3 IN. = 1 FT.

NOTE:
ALL OUTSIDE CORNERS MAY HAVE 7/32 RADII AND INSIDE CORNERS 5/32 RADII UNLESS OTHERWISE NOTED.

ASSY. NO.	COVER NO.	A	B	C	D	E	REMARKS
10630	10630-2	1 9/16	7 1/8	14 1/4	21 3/8	28 1/2	SHOWN
10630-4	10630-3	1 9/16	7 1/8	14 1/4	21 3/8	28 1/2	CUTOUT AS SHOWN IN FIG. 2
10630-5	10630-6	1 7/16	7 3/16	14 3/8	21 9/16	28 3/4	CUTOUT OPPOSITE TO -7
10630-8	10630-7	1 7/16	7 3/16	14 3/8	21 9/16	28 3/4	CUTOUT AS SHOWN IN FIG. 2
10630-9	10630-10	1 7/16	7 3/16	14 3/8	21 9/16	28 3/4	FORMED OPP. TO -2
10630-11	10630-12	1 7/16	7 3/16	14 3/8	21 9/16	28 3/4	SHOWN

LET.	REVISION	DATE	BY
L	-11 ADDED	9-11-50	K.D.
K	-9 ADDED	2-21-50	C.K.
J	-3-6-7-8 ADDED	6-29-49	RM
H	-4 ADDED	9-2-48	RC
G	1 3/16 WAS 1 5/8; 3/16 WAS 5/8	10-10-46	L.R.
F	5/16 R. & 5/32 R. REM.	10-10-46	L.R.
E	5/8 DIM & ROUTING NOTE ADDED	10-10-46	L.R.
D	1 1/8 DIM. WAS 1 1/32; 23 1/16 WAS 23 3/16	10-10-46	L.R.
C	[illegible] ADDED; .250 HOLE [illegible] HOLE	10-10-46	L.R.
B	BOOTS ANCHOR NUT WAS ELASTIC STOP NUT	10-10-46	L.R.
A	3/32 x 3/64 TUBULAR RIVET WAS 3/32 x 3/64 CORNER	10-10-46	L.R.

THIS DRAWING IS THE PROPERTY OF THE PIPER AIRCRAFT CORP. AND ITS POSSESSION BY UNAUTHORIZED PERSONS SHALL NOT BE CONSTRUED AS PERMISSION TO REPRODUCE FOR SALE, IN WHOLE OR IN PART, ANY DEVICES SHOWN THEREON

PART NO.	NO. REQ.	SIZE	DESCRIPTION / MATERIAL
	10	3/32 x 9/64 LG	STL. TUBULAR CD. PLATED RIVET
	5		BOOTS ANCHOR NUT #W2SE1032
SEE TABLE	1	.020 x 23 11/16 x 31 5/8	35-1/2 HALUM

SCALE 4 IN. = 1 FT. & NOTED | TOTAL WT.—LBS.
FINISH—PIPER SPECIFICATION #10
MANUFACTURING PRACTICES—PIPER SPECIFICATION #9

COVER ASSEMBLY—LEADING EDGE

PIPER AIRCRAFT CORP.
LOCK HAVEN, PENNA.

DRAFTSMAN	CHECKER	STANDARDS
BBC 5-10-46	R.C.T. 5-13-46	

10630

A706

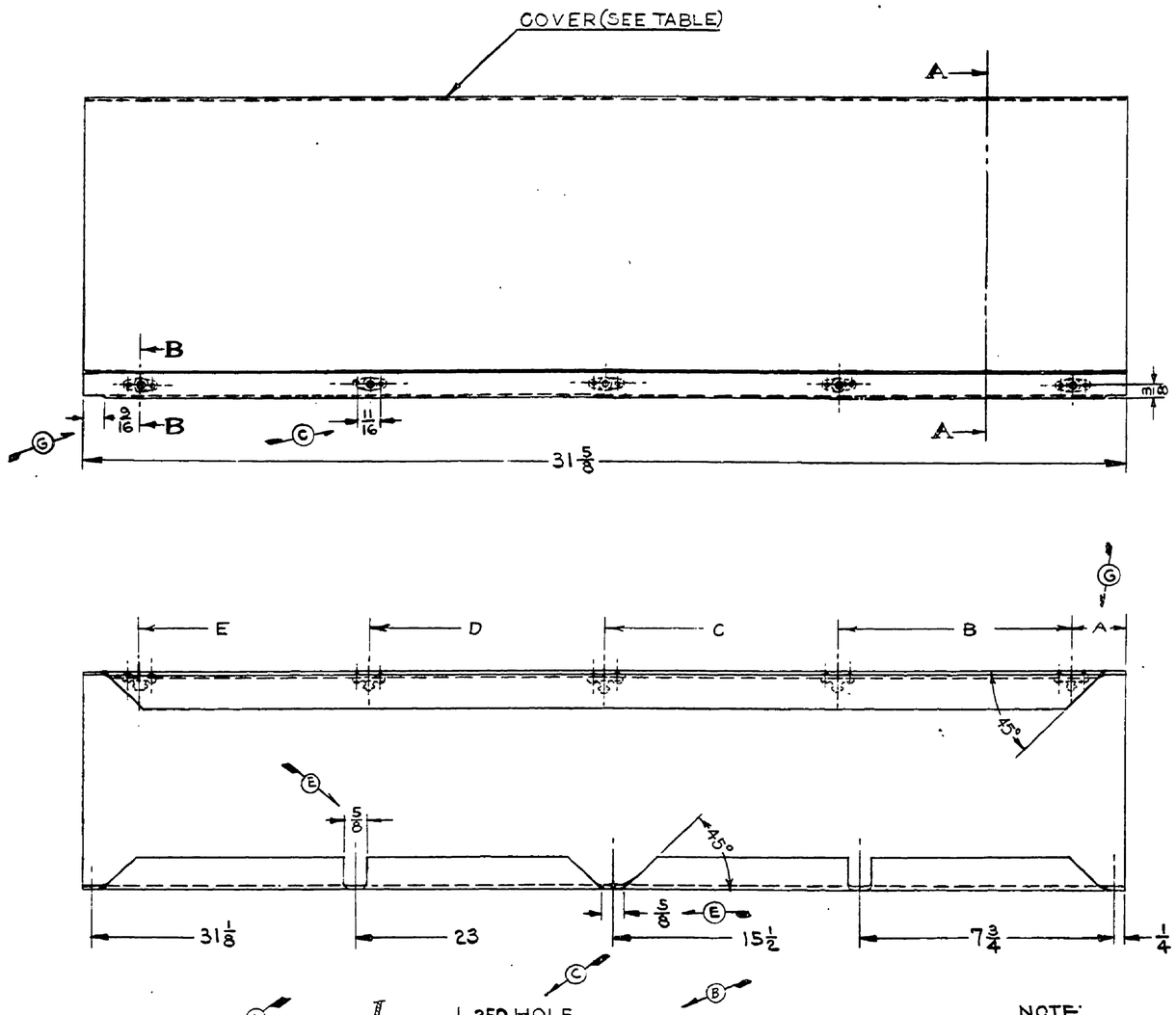

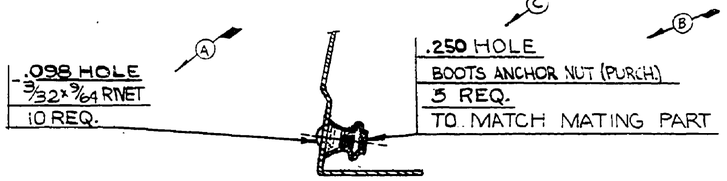

SECTION B-B
FULL SIZE

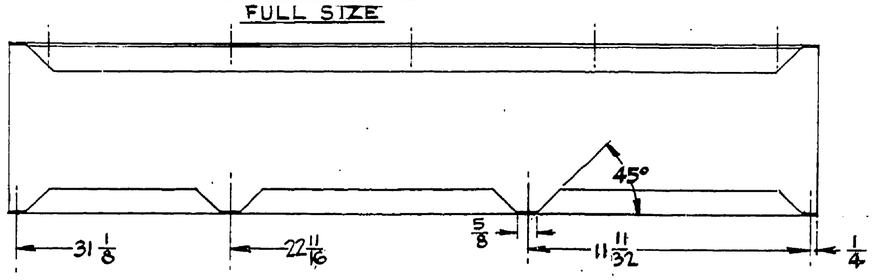

FIG. 2
RIB CUTOUTS FOR -3 & -7 (SHOWN) & -6 (OPPOSITE)
3 IN. = 1 FT

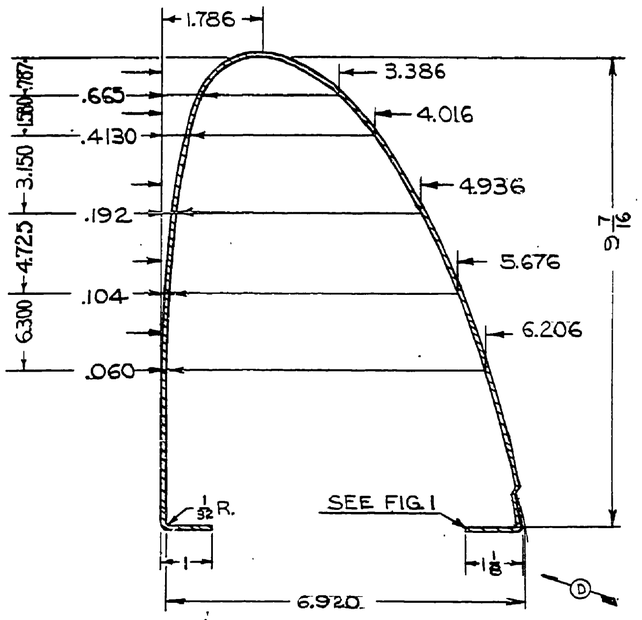

SECTION A-A
6 IN. = 1 FT.

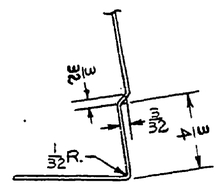

FIG. 1
FULL SIZE

NOTE:
ALL OUTSIDE CORNERS MAY HAVE $\frac{7}{32}$ RADII AND INSIDE CORNERS $\frac{5}{32}$ RADII UNLESS OTHERWISE NOTED.

ASSY. NO.	COVER NO.	A	B	C	D	E	REMARKS
10630	10630-2	$1\frac{9}{16}$	$7\frac{1}{8}$	$14\frac{1}{4}$	$21\frac{3}{8}$	$28\frac{1}{2}$	SHOWN
10630-4	10630-3	$1\frac{9}{16}$	$7\frac{1}{8}$	$14\frac{1}{4}$	$21\frac{3}{8}$	$28\frac{1}{2}$	CUTOUT AS SHOWN IN FIG. 2
10630-5	10630-6	$1\frac{7}{16}$	$7\frac{3}{16}$	$14\frac{3}{8}$	$21\frac{9}{16}$	$28\frac{3}{4}$	CUTOUT OPPOSITE TO -7
10630-8	10630-7	$1\frac{7}{16}$	$7\frac{3}{16}$	$14\frac{3}{8}$	$21\frac{9}{16}$	$28\frac{3}{4}$	CUTOUT AS SHOWN IN FIG. 2
10630-9	10630-10	$1\frac{7}{16}$	$7\frac{3}{16}$	$14\frac{3}{8}$	$21\frac{9}{16}$	$28\frac{3}{4}$	FORMED OPP. TO -2
10630-11	10630-12	$1\frac{7}{16}$	$7\frac{3}{16}$	$14\frac{3}{8}$	$21\frac{9}{16}$	$28\frac{3}{4}$	SHOWN

LET.	REVISION	DATE	BY
L	-11 ADDED	9-11-50	K.D.
K	-9 ADDED	2-21-50	C.K.
J	-3-6-7-8 ADDED	6-25-49	RM
H	-4 ADDED	9-2-48	RC
G	$1\frac{3}{16}$ WAS $1\frac{5}{8}$; $\frac{3}{16}$ WAS $\frac{5}{8}$	10-10-46	L.R.
F	$\frac{5}{16}$ R. & $\frac{5}{32}$ R. REM.	10-10-46	L.R.
E	$\frac{5}{8}$ DIM. & ROUTING NOTE ADDED	10-10-46	L.R.
D	$1\frac{1}{8}$ DIM. WAS $1\frac{1}{32}$; $23\frac{11}{16}$ WAS $23\frac{3}{4}$	10-10-46	L.R.
C	[illegible] ADDED; .250 HOLE WAS .194 HOLE	10-10-46	L.R.
B	BOOTS ANCHOR NUT WAS ELASTIC STOP NUT	10-10-46	L.R.
A	$\frac{3}{32}$ x $\frac{3}{64}$ TUBULAR RIVET WAS $\frac{3}{32}$ x $\frac{1}{4}$ 25 RIVET	10-10-46	L.R.

THIS DRAWING IS THE PROPERTY OF THE PIPER AIRCRAFT CORP. AND ITS POSSESSION BY UNAUTHORIZED PERSONS SHALL NOT BE CONSTRUED AS PERMISSION TO REPRODUCE FOR SALE, IN WHOLE OR IN PART, ANY DEVICES SHOWN THEREON

PART NO.	No. REQ.	SIZE	DESCRIPTION
	10	$\frac{3}{32}$ x $\frac{9}{64}$ LG.	STL. TUBULAR CD. PLATED RIVET
	5	BOOTS ANCHOR NUT #W2SE1032	
SEE TABLE	1	.020 x $23\frac{11}{16}$ x $31\frac{5}{8}$	35-$\frac{1}{2}$ H ALUM.

MATERIAL

SCALE 4 IN. = 1 FT. & NOTED — TOTAL WT.—LBS.
FINISH—PIPER SPECIFICATION #10
MANUFACTURING PRACTICES—PIPER SPECIFICATION #9

COVER ASSEMBLY—
LEADING EDGE

MODEL	PER PLANE	NEXT ASSEMBLY	SUPERSEDES	SUP. BY

PIPER AIRCRAFT CORP.
LOCK HAVEN, PENNA.

DRAFTSMAN	CHECKER	STANDARDS
BBC 5-10-46	R.E.T. 5-13-46	

10630

706

A706

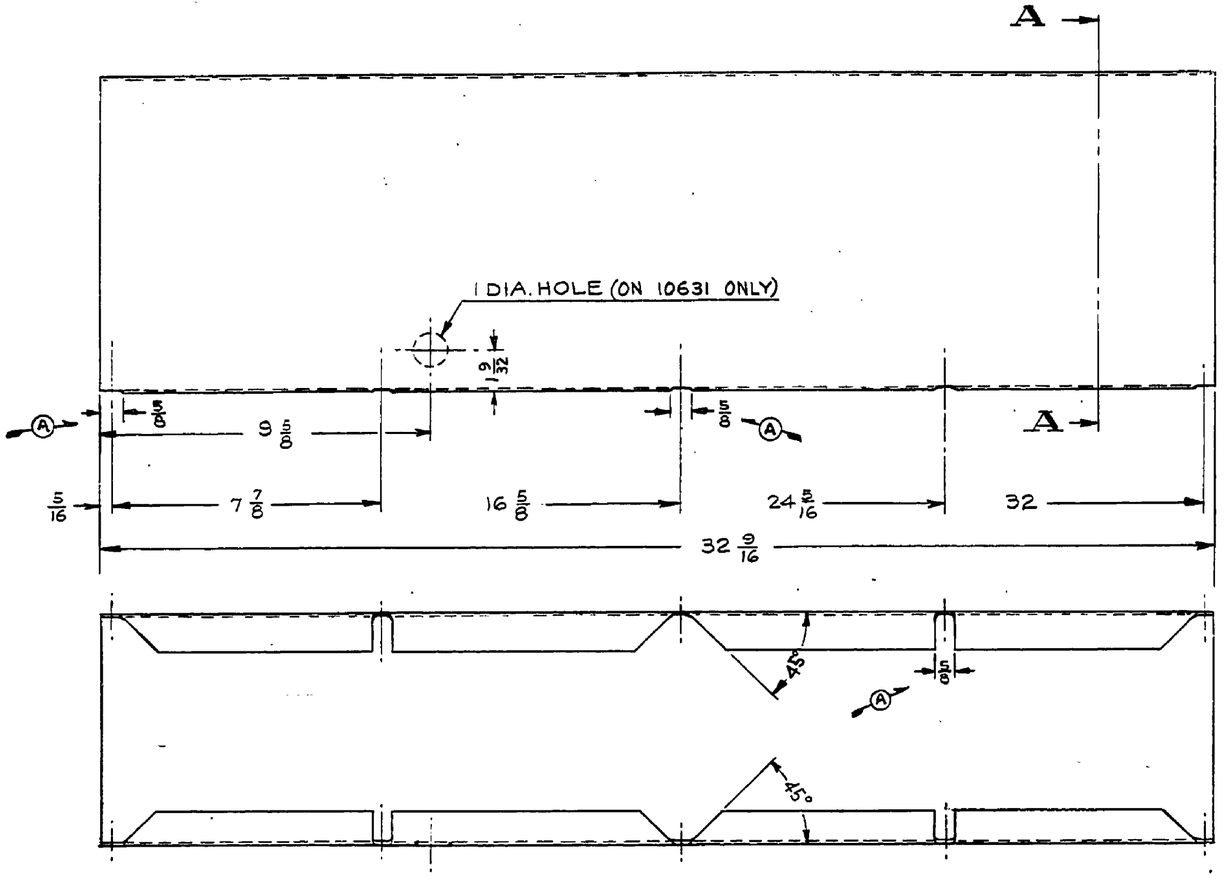

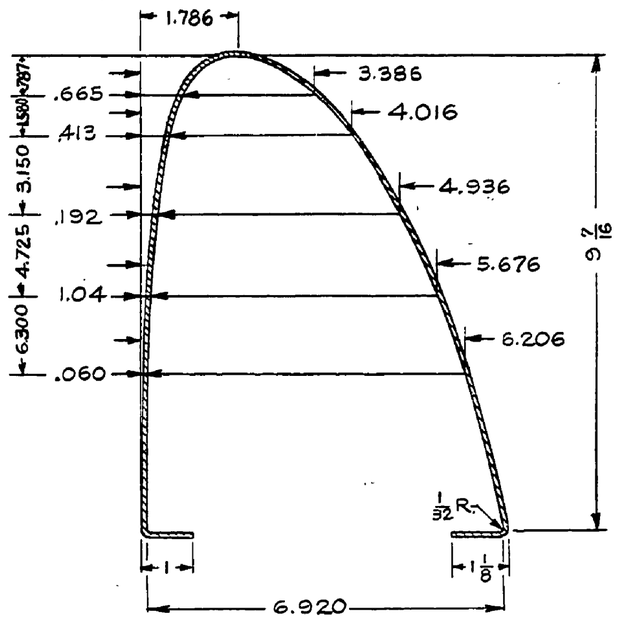

SECTION A-A
6 IN. = 1 FT.

NOTE:
(A) ALL OUTSIDE CORNERS MAY HAVE 7/32 RADII AND INSIDE CORNERS 5/32 RADII UNLESS OTHERWISE NOTED

(B) 10631 SHOWN
10631-1 OPPOSITE (WITHOUT 1 DIA. HOLE.)

LET.	REVISION	DATE	BY
B	-1 ADDED	2-21-50	C.K.
A	1/4 R REM. 1/8 DIM. & NOTE ADDED	10-9-46	L.R.

THIS DRAWING IS THE PROPERTY OF THE PIPER AIRCRAFT CORP. AND ITS POSSESSION BY UNAUTHORIZED PERSONS SHALL NOT BE CONSTRUED AS PERMISSION TO REPRODUCE FOR SALE, IN WHOLE OR IN PART, ANY DEVICES SHOWN THEREON

PART NO.	NO. REQ.	SIZE	DESCRIPTION
		.016 x 23 9/16 x 32 9/16	3S-1/2H ALUM.
		MATERIAL	

SCALE 4 IN. = 1 FT. & NOTED | TOTAL WT.-LBS.
FINISH—PIPER SPECIFICATION #10
MANUFACTURING PRACTICES—PIPER SPECIFICATION #9

PART NO.	MODEL	PER PLANE	NEXT ASSEMBLY	SUPERSEDES	SUP. BY

PIPER AIRCRAFT CORP.
LOCK HAVEN, PENNA.

COVER-LEADING EDGE

DRAFTSMAN	CHECKER	STANDARDS
C.E.K. 5-9-46	R.E.T. 5-10-46	

10631

A707

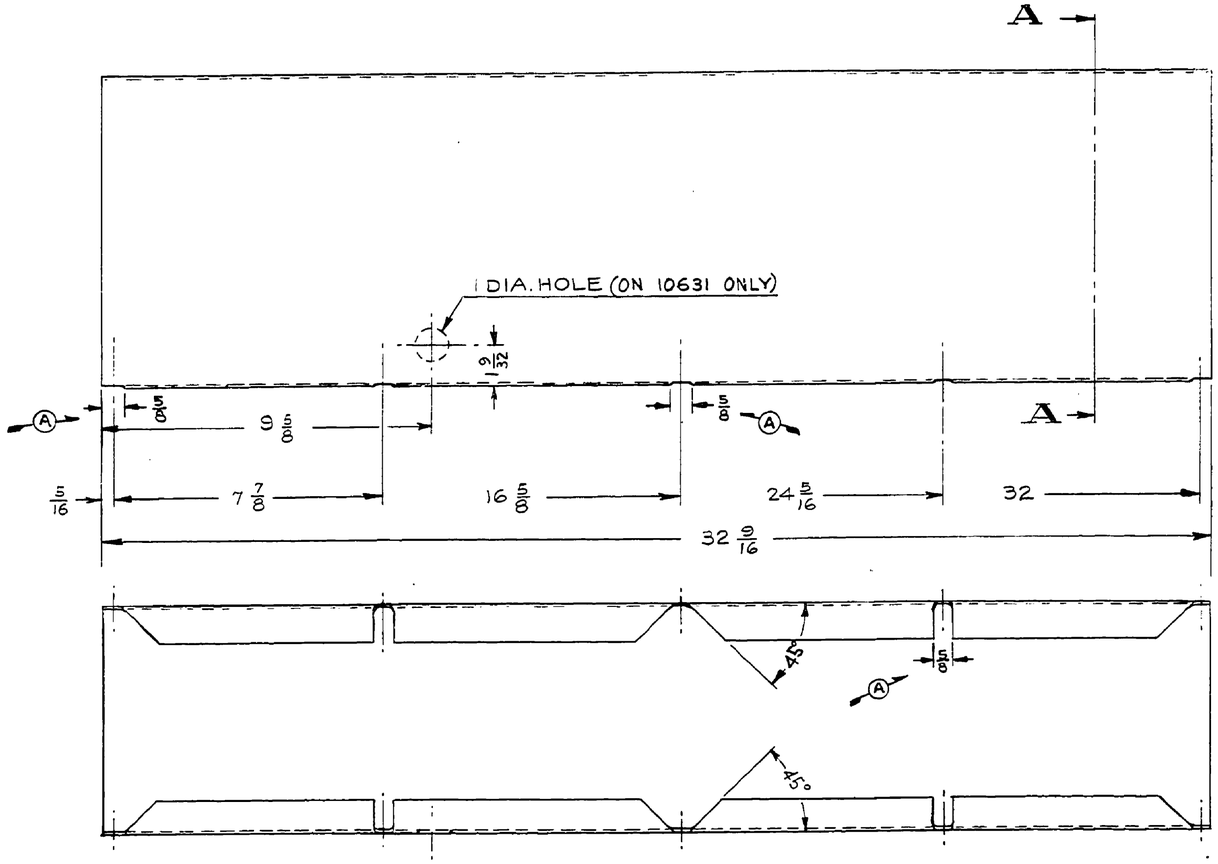

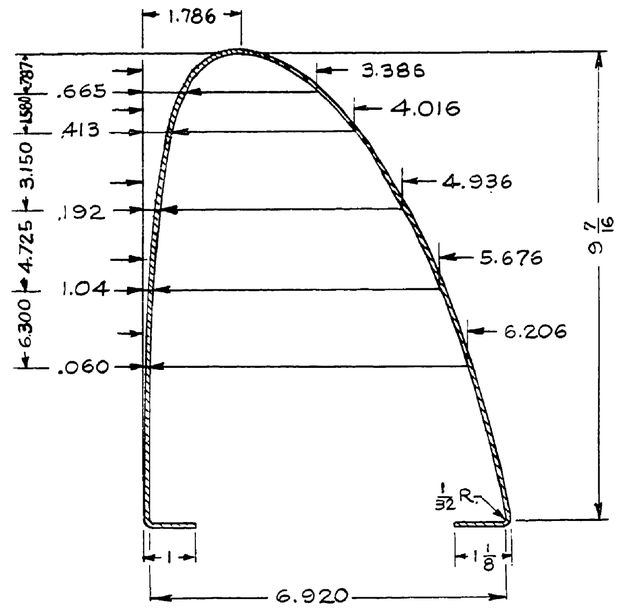

SECTION A-A
6 IN. = 1 FT.

NOTE:
ALL OUTSIDE CORNERS MAY HAVE 7/32 RADII AND
INSIDE CORNERS 5/32 RADII UNLESS OTHERWISE NOTED

10631 SHOWN
10631-1 OPPOSITE (WITHOUT 1 DIA. HOLE.)

LET.	REVISION	DATE	BY
B	-1 ADDED	2-21-50	C.K.
A	1/2 R REM., 3/8 DIM. & NOTE ADDED	10-3-46	L.R.

THIS DRAWING IS THE PROPERTY OF THE PIPER AIRCRAFT CORP. AND ITS POSSESSION BY UNAUTHORIZED PERSONS SHALL NOT BE CONSTRUED AS PERMISSION TO REPRODUCE FOR SALE, IN WHOLE OR IN PART, ANY DEVICES SHOWN THEREON

MODEL	PER PLANE	NEXT ASSEMBLY	SUPERSEDES	SUP. BY
PA-11				

PIPER AIRCRAFT CORP.
LOCK HAVEN, PENNA.

PART No.	No. REQ.	SIZE	MATERIAL / DESCRIPTION
		.016 x 23 9/16 x 32 9/16	3S-1/2H ALUM.

SCALE 4 IN. = 1 FT. & NOTED | TOTAL WT.–LBS.
FINISH–PIPER SPECIFICATION #10
MANUFACTURING PRACTICES–PIPER SPECIFICATION #9

COVER-LEADING EDGE

DRAFTSMAN	CHECKER	STANDARDS
C.E.K. 5-9-46	R.E.T. 5-10-46	

10631

A707

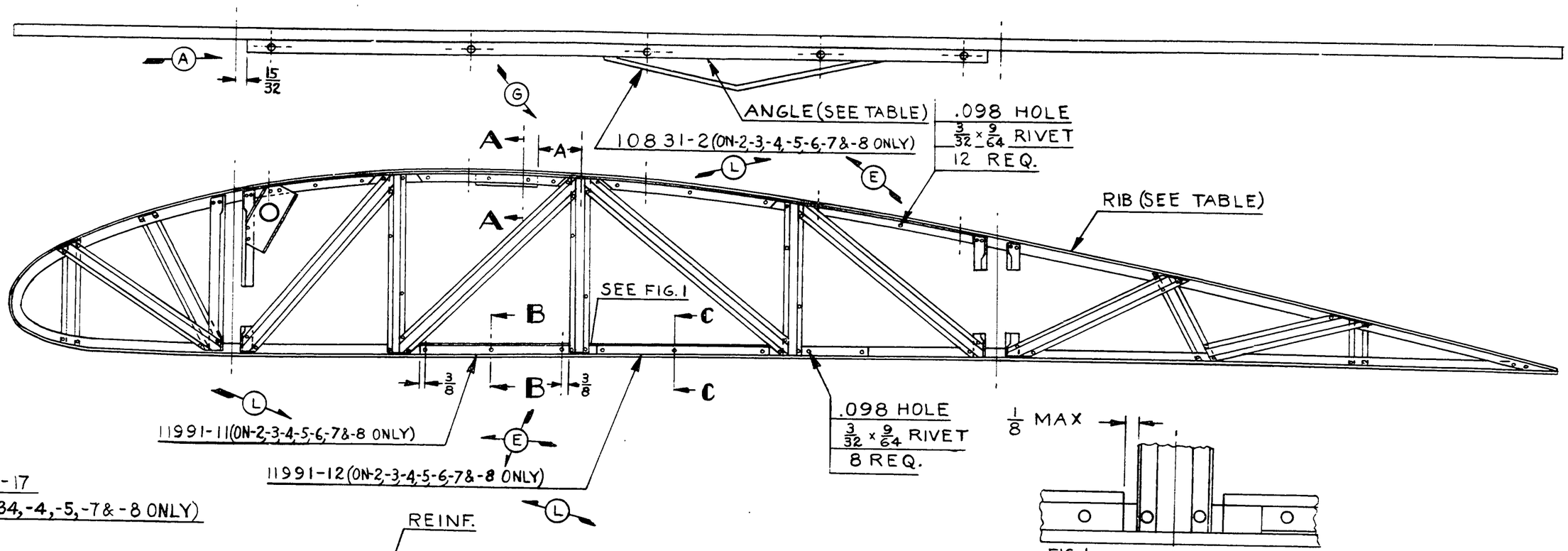

FIG. 1
FULL SIZE

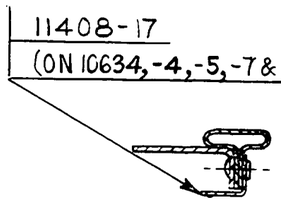

SECTION A-A
FULL SIZE

SECTION B-B
FULL SIZE

SECTION C-C
FULL SIZE

ASS'Y. NO.	RIB	A	ANGLE NO.	REMARKS
10634	10908	1 3/4	10636	
10634-2	13052-5	—	10636	
10634-3	10908-2	—	10636	
10634-4	10908-3	2 3/4	10636	
10634-5	10908-4	2 3/4	10636	
10634-6	13052-5	—	10636-1	PARTS 10636-1
10634-7	10908-4	2 3/4	10636-1	& 10831-2 ASSEM.
10634-8	10908-3	2 3/4	10636-1	OPP.

PART NO.	NO. REQ.	MATERIAL SIZE	DESCRIPTION
10908-4	1		RIB ASS'Y. (SEE TABLE)
10908-3	1		RIB ASS'Y. (SEE TABLE)
11408-17	1		ANGLE (ON 10634, 10634-4, 10634-5 10634-7, 10634-8 ONLY)
10831-2	1		REINF. USED ON -2, -3, -4, -5, -6, -7 & -8 ONLY
11991-12	1		CAPSTRIP
11991-11	1		CAP STRIP
10908-2	1		RIB ASSY (SEE TABLE)
13052-5	1		RIB ASSY. (SEE TABLE)
	12	3/32 x 9/64 L	STL. TUBULAR CD. PLATED RIVET
10908	1		RIB ASSEMBLY (SEE TABLE)
10636 10636-1	1		SUPPORT ANGLE (SEE TABLE)

SCALE 3 IN. = 1 FT. & NOTED | TOTAL WT.—LBS.
FINISH—PIPER SPECIFICATION # 10
MANUFACTURING PRACTICES—PIPER SPECIFICATION # 9

LET	REVISION	DATE	BY
L	10831-2, 11991-11 & 11991-12 ADDED TO -4-5-7 & -8	5-9-50	C.K.
K	-7 & -8 ADDED	2-21-50	C.K.
J	-6 ADDED & TABLE REV.	2-1-50	M.G.
H	-5 ADDED	1-4-50	J.O.
G	-4 & 10908-3 ADDED 'A' DIM. TABULATED	12-9-49	K.D.
F	11408-17 ADDED	7-25-49	R.R.
E	REINF. ADDED TO -2	4-4-49	R.M.
D	-3 ADDED	2-9-49	R.M.
C	-2 & TABLE ADDED	3-18-48	H.R.K.
B	10908 WAS 13052-4	10-17-46	L.R.
A	10636 VIEW REVISED	9-13-46	E.L.N.
M	REDRAWN WITHOUT CHANGE	6-18-51	C.K.

MODEL	PER PLANE	NEXT ASSEMBLY	SUPERSEDES	SUP. BY
PA-11				

THIS DRAWING IS THE PROPERTY OF THE PIPER AIRCRAFT CORP. AND ITS POSSESSION BY UNAUTHORIZED PERSONS SHALL NOT BE CONSTRUED AS PERMISSION TO REPRODUCE FOR SALE IN WHOLE OR IN PART ANY DEVICES SHOWN THEREON.

PIPER AIRCRAFT CORP.
LOCK HAVEN, PENNA.

RIB ASSEMBLY - WING FULL

E.L.N.	R.E.T.	
5-16-46	5-20-46	
DRAFTSMAN	CHECKER	STANDARDS

10634

430

A430

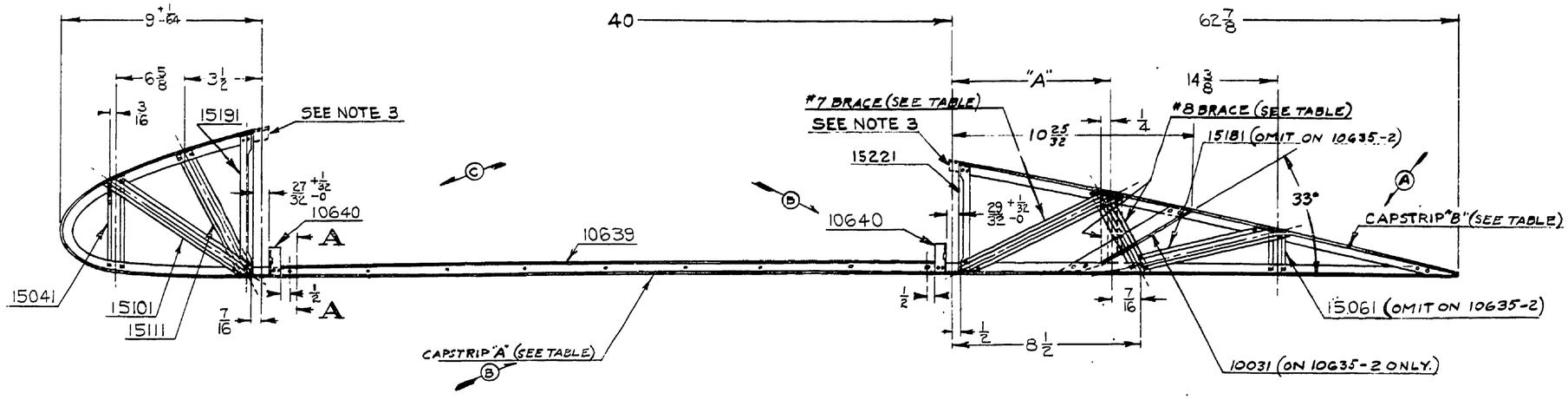

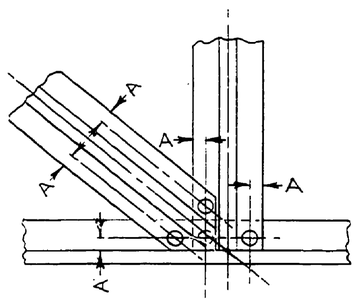

A = 1/8 MIN.
TYPICAL JOINT
FULL SIZE

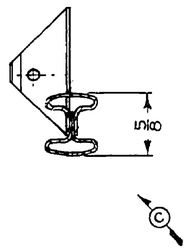

SECTION A-A
FULL SIZE

ASS'Y. NO.	#7 BRACE	#8 BRACE	CAPSTRIP "A"	CAPSTRIP "B"	"A" DIM.
10635	15161	15171	15812	15801	7
10635-2	15991	16011	90458	90459	6 1/16

NOTES:
1. ALL RIVETS 3/32 (.098 HOLE)
2. FOR WING FULL RIB CONTOUR SEE DWG. 13814.
3. CUT CAPSTRIPS OFF FLUSH WITH SPAR ATTACHMENT FLANGES.

PART NO.	NO. REQ.	SIZE	DESCRIPTION
		MATERIAL	
90459	1		CAPSTRIP (ON 10635-2 ONLY)
10031	1		FORMER (ON 10635-2 ONLY)
16011	1		#8 VERTICAL BRACE (ON 10635-2 ONLY)
15991	1		#7 DIAGONAL BRACE (ON 10635-2 ONLY)
90458	1		CAPSTRIP. (ON 10635-2 ONLY)
	43	3/32 x 9/64 L.	STL. TUBULAR CD. PLATED RIVET
15221	1		#4 ANGLE BRACE
15191	1		#1 ANGLE BRACE
15181	1		#9 DIAGONAL BRACE (10635 ONLY)
15171	1		#8 DIAGONAL BRACE (10635 ONLY)
15161	1		#7 DIAGONAL BRACE (10635 ONLY)
15111	1		#2 DIAGONAL BRACE
15101	1		#1 DIAGONAL BRACE
15061	1		#5 VERTICAL BRACE (10635 ONLY)
15041	1		#1 VERTICAL BRACE
13814	DWG. REF. ONLY		WING FULL RIB OUTLINE
10640	2		ANGLE BRACE
10639	1		REINFORCEMENT
15812	1		CAPSTRIP (10635 ONLY)
15801	1		CAPSTRIP (10635 ONLY)

LET.	REVISION	DATE	BY
D	-2 & TABLE ADDED.	1-9-50	J.O.
C	10640 VIEWS REVISED	10-15-46	C.E.K.
B	10640 WAS 10640-1; 15812 WAS 10638	10-15-46	C.E.K.
A	15801, WAS 10637; NOTE 3 ADD.	10-15-46	C.E.K.

THIS DRAWING IS THE PROPERTY OF THE PIPER AIRCRAFT CORP. AND ITS POSSESSION BY UNAUTHORIZED PERSONS SHALL NOT BE CONSTRUED AS PERMISSION TO REPRODUCE FOR SALE, IN WHOLE OR IN PART, ANY DEVICES SHOWN THEREON

MODEL	PER PLANE	NEXT ASSEMBLY	SUPERSEDES	SUP. BY
RA-1				

PIPER AIRCRAFT CORP.
LOCK HAVEN, PENNA.

SCALE 3 IN. = 1 FT. & NOTED | TOTAL WT.-LBS.
FINISH—PIPER SPECIFICATION #10
MANUFACTURING PRACTICES—PIPER SPECIFICATION #9

RIB ASSEMBLY - WING

E.L.N.	R.E.T.		
5-10-46	5-10-46		10635
DRAFTSMAN	CHECKER	STANDARDS	

A708

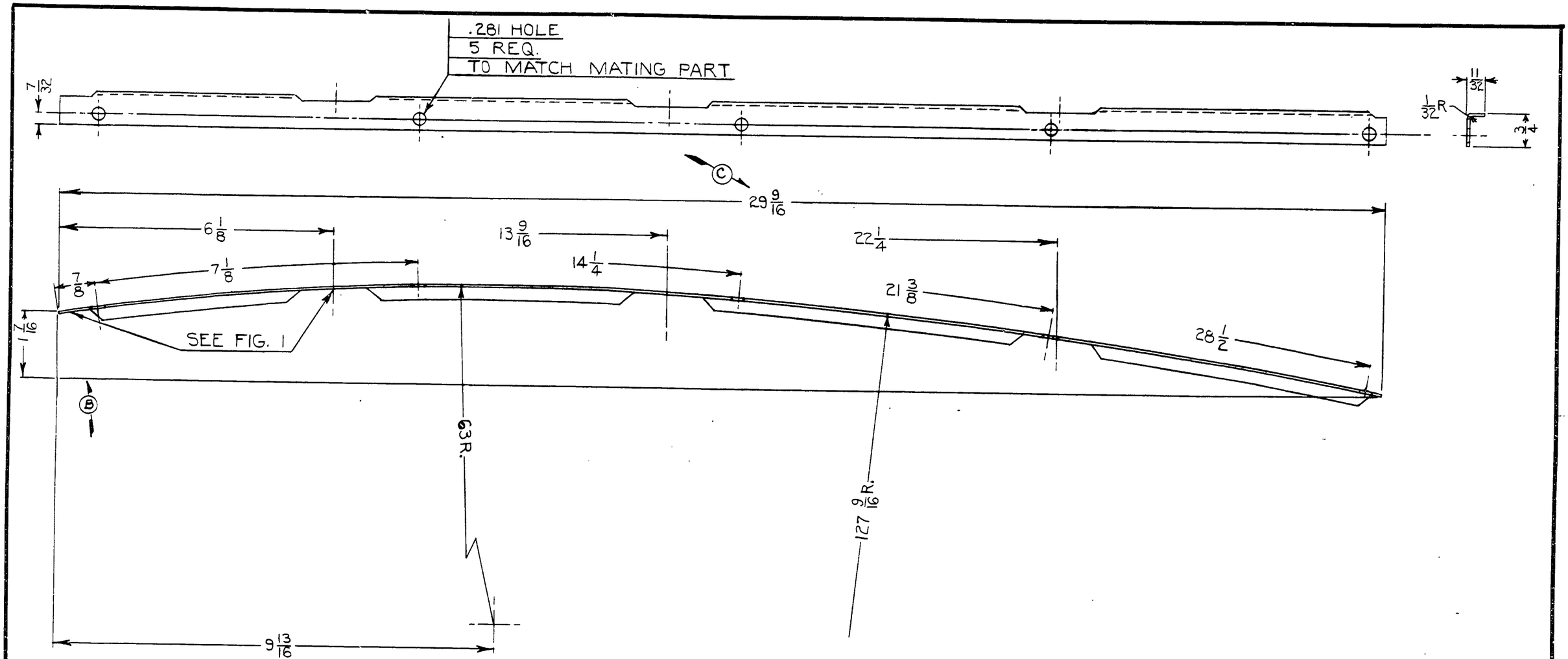

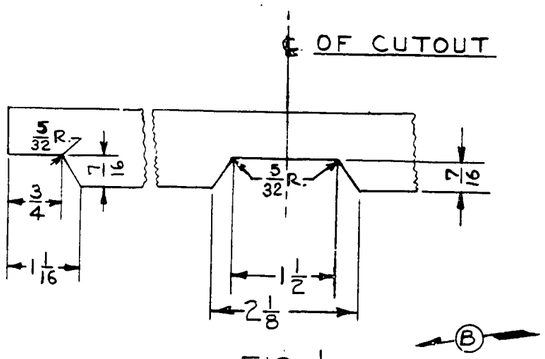

FIG. 1
TYPICAL CUTOUT
(FLAT PATTERN)

10636 L.H. SHOWN
10636-1 R.H. OPPOSITE

LET.	REVISION	DATE	BY
C	29 5/16 WAS 30 1/16	5-6-47	HMZ
B	FIG. 1 & CUTOUTS REVISED	11-20-46	I.M.M.
A	REDRAWN & REVISED	9-16-46	E.L.N.

THIS DRAWING IS THE PROPERTY OF THE PIPER AIRCRAFT CORP. AND ITS POSSESSION BY UNAUTHORIZED PERSONS SHALL NOT BE CONSTRUED AS PERMISSION TO REPRODUCE FOR SALE, IN WHOLE OR IN PART, ANY DEVICES SHOWN THEREON.

MODEL	PER PLANE	NEXT ASSEMBLY	SUPERSEDES	SUP. BY
PA-11				

PIPER AIRCRAFT CORP.
LOCK HAVEN, PENNA.

PART No.	No. REQ.	SIZE	DESCRIPTION
-3	1	.040×1 1/32×30 9/16	52S-1/2 H. ALUM.
-2		.040×1 1/32×30 1/16	52S-1/2 H. ALUM.

MATERIAL
SCALE 6 IN. = 1 FT. — TOTAL WT.—LBS.
FINISH—PIPER SPECIFICATION #10
MANUFACTURING PRACTICES—PIPER SPECIFICATION #9

ANGLE-FUEL TANK COVER SUPPORT

DRAFTSMAN	CHECKER	STANDARDS
E. L. N. 9-16-46	R. D. M. 9-16-46	

10688

A431

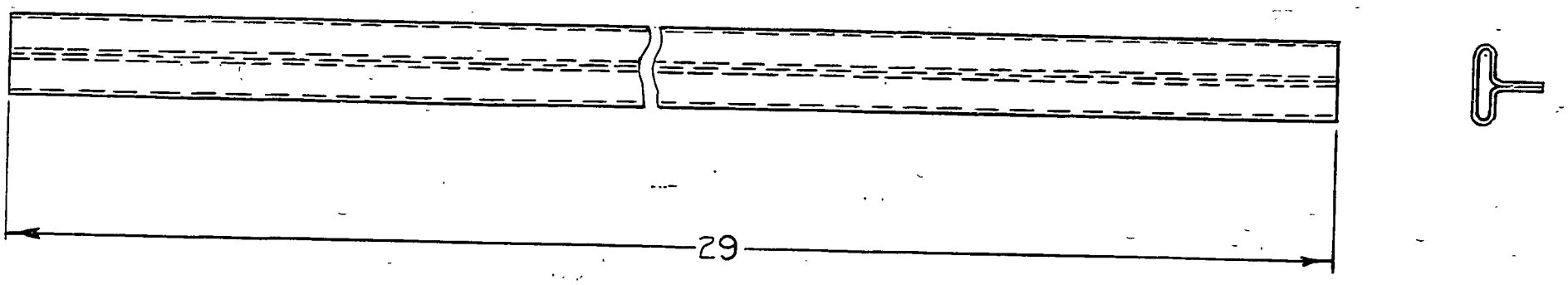

84771	DWG. REF. ONLY	RIB CAPSTRIP SECTION	
		29 L.	PIPER SECTION 84771
PART No.	No. REQ.	SIZE	DESCRIPTION
		MATERIAL	
SCALE FULL SIZE		TOTAL WT.—LBS.	
FINISH—PIPER SPECIFICATION #10			
MANUFACTURING PRACTICES—PIPER SPECIFICATION #9			

REINFORCEMENT-CAPSTRIP

THIS DRAWING IS THE PROPERTY OF THE PIPER AIRCRAFT CORP. AND ITS POSSESSION BY UNAUTHORIZED PERSONS SHALL NOT BE CONSTRUED AS PERMISSION TO REPRODUCE FOR SALE, IN WHOLE OR IN PART, ANY DEVICES SHOWN THEREON.

MODEL	PER PLANE	NEXT ASSEMBLY	SUPERSEDES	SUP. BY
PA-11				

LET.	REVISION	DATE	BY

PIPER AIRCRAFT CORP.
LOCK HAVEN, PENNA.

E.L.N.	R.E.T.		
5-8-46	5-10-46		10639
DRAFTSMAN	CHECKER	STANDARDS	

PENCILTEX A. & B. SMITH CO., PGH., PA.

A24

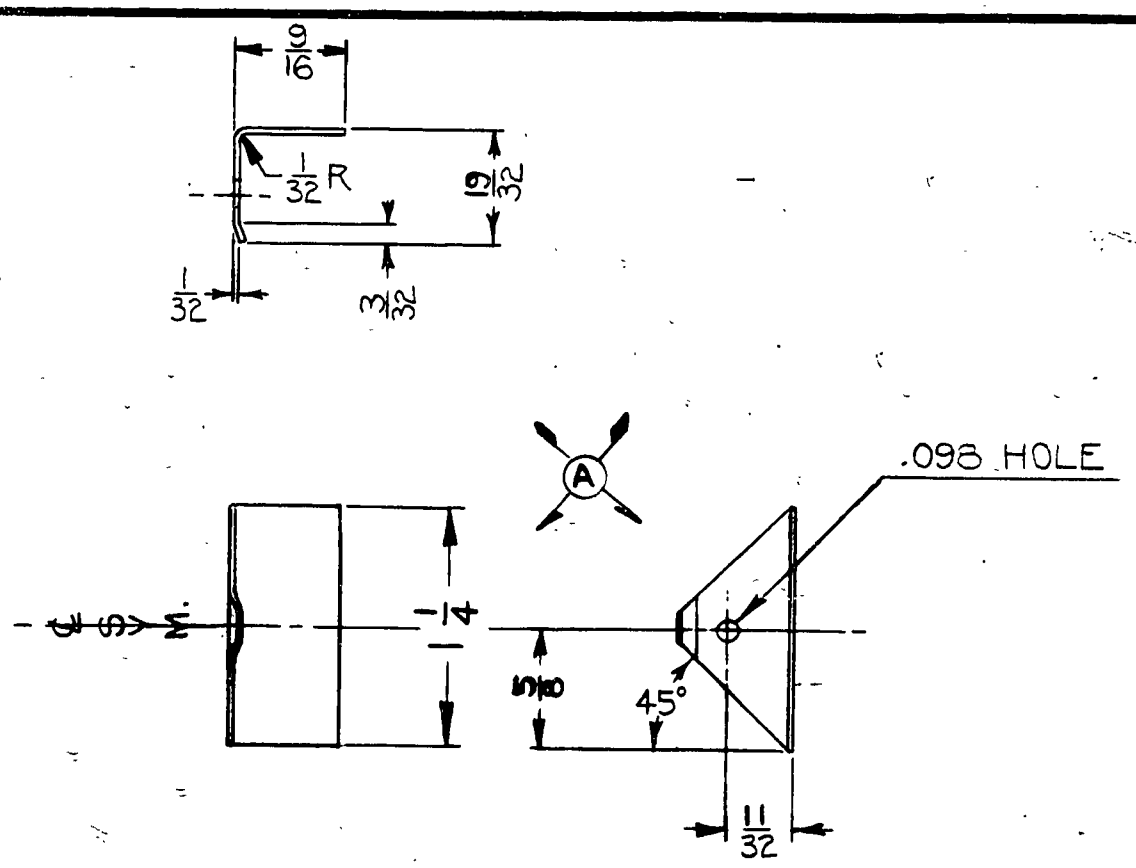

B

LET.	REVISION	DATE	BY
B	REMOVED -1	10-16-46	J.H.
A	1¼ WAS 1 7/16; ADDED SYM. 45° CUT-OFF	10-16-46	J.H.

THIS DRAWING IS THE PROPERTY OF THE PIPER AIRCRAFT CORP. AND ITS POSSESSION BY UNAUTHORIZED PERSONS SHALL NOT BE CONSTRUED AS PERMISSION TO REPRODUCE FOR SALE, IN WHOLE OR IN PART, ANY DEVICES SHOWN THEREON.

PART

MODEL	PER PLANE	NEXT ASSEMBLY	SUPERSEDES	SUP. BY

PIPER AIRCRAFT CORP.
LOCK HAVEN, PENNA.

PART No.	No. REQ.	SIZE	MATERIAL DESCRIPTION
		.020×1⅛×1 7/16	NICRAL OR 61S-T ALUM

SCALE FULL SIZE — TOTAL WT.—LBS.

FINISH—PIPER SPECIFICATION #10

MANUFACTURING PRACTICES—PIPER SPECIFICATION #9

BRACE—WING RIB ANGLE

E.L.N.	R.E.T.		
5-8-46	5-10-46		
DRAFTSMAN	CHECKER	STANDARDS	

10640

PENCILTEX A. & B. SMITH CO., PGH., PA.

B

A25

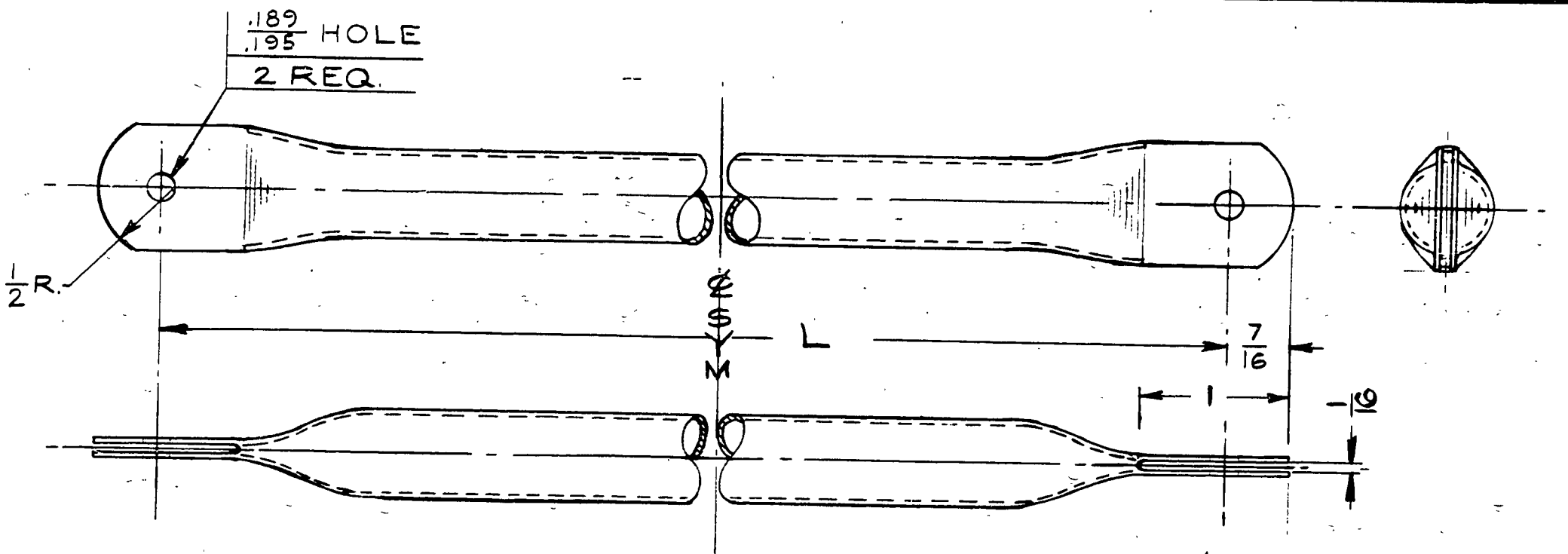

PART NO.	L
10641	47 11/32
10641-2	47 1/4

THIS DRAWING IS THE PROPERTY OF THE PIPER AIRCRAFT CORP. AND ITS POSSESSION BY UNAUTHORIZED PERSONS SHALL NOT BE CONSTRUED AS PERMISSION TO REPRODUCE FOR SALE, IN WHOLE OR IN PART, ANY DEVICES SHOWN THEREON.

LET.	REVISION	DATE	BY
B	-2 & TABLE ADDED	2-9-50	JCB
A	ENDS REVISED	5-13-46	DC

PART No.	No. REQ.	SIZE	DESCRIPTION
		5/8 X .035 X NOTED	#4130 STL. TUBE
		MATERIAL	

SCALE FULL SIZE — TOTAL WT.—Lbs.

FINISH—PIPER SPECIFICATION #10

MANUFACTURING PRACTICES—PIPER SPECIFICATION #9

MODEL	PER PLANE	NEXT ASSEMBLY	SUPERSEDES	SUP. BY
PA-11				

PIPER AIRCRAFT CORP.
LOCK HAVEN, PENNA.

TUBE - DRAG BRACE

DRAFTSMAN	CHECKER	STANDARDS
C.E.K. 5-10-46	R.E.T. 5-10-46	

10641

PENCILTEX A. & B. SMITH CO., PGH., PA.

A26

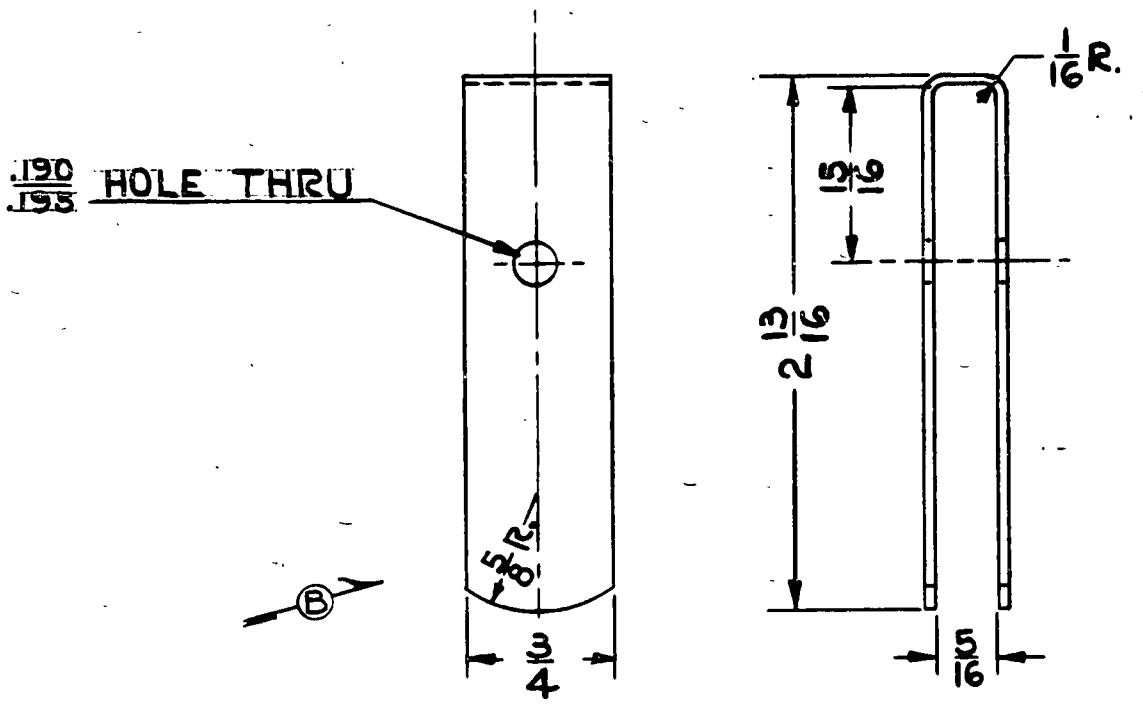

THIS DRAWING IS THE PROPERTY OF THE PIPER AIRCRAFT CORP. AND ITS POSSESSION BY UNAUTHORIZED PERSONS SHALL NOT BE CONSTRUED AS PERMISSION TO REPRODUCE FOR SALE, IN WHOLE OR IN PART, ANY DEVICES SHOWN THEREON.

LET.	REVISION	DATE	BY
B	5/8 R. ADDED	1-8-47	BC
A	REDRAWN & REVISED	10-14-46	B.C.

MODEL	PER PLANE	NEXT ASSEMBLY	SUPERSEDES	SUP. BY

PIPER AIRCRAFT CORP.
LOCK HAVEN, PENNA.

PART No.	No. REQ.	SIZE	DESCRIPTION
		.045 x 3/4 x 5 15/16	1025 STEEL
		MATERIAL	

SCALE FULL SIZE — TOTAL WT.--LBS.

FINISH—PIPER SPECIFICATION #10

MANUFACTURING PRACTICES—PIPER SPECIFICATION #9

BRACKET-PULLEY

DRAFTSMAN	CHECKER	STANDARDS
B.B.C. 10-14-46	J.E.H. 10-14-46	

10643

PENCILTEX A. & B. SMITH CO., PGH., PA.

A 27

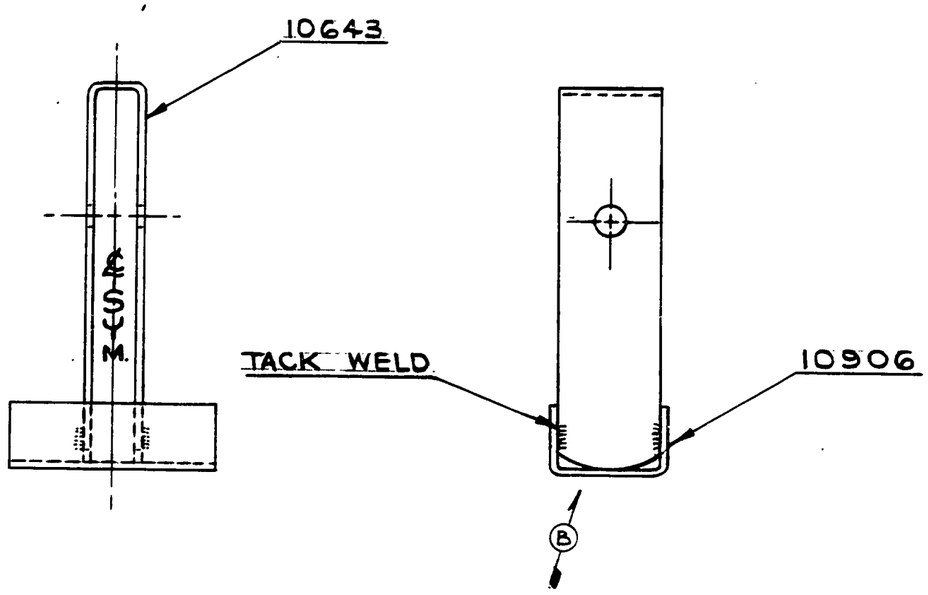

PART No.	No. REQ.	NAME / MATERIAL
10906	1	BRACKET
10643	1	BRACKET

SCALE FULL SIZE — TOTAL WT.—LBS.

FINISH—PIPER SPECIFICATION #10

MANUFACTURING PRACTICES—PIPER SPECIFICATION #9

BRACKET ASSEMBLY-PULLEY

THIS DRAWING IS THE PROPERTY OF THE PIPER AIRCRAFT CORP. AND ITS POSSESSION BY UNAUTHORIZED PERSONS SHALL NOT BE CONSTRUED AS PERMISSION TO REPRODUCE FOR SALE, IN WHOLE OR IN PART. ANY DEVICES SHOWN THEREON.

MODEL	PER PLANE	NEXT ASSEMBLY	SUPERSEDES	SUP. BY

LET.	REVISION	DATE	BY
B	VIEW OF 10643 REV.	3-17-47	L.R.
A	REDRAWN & REVISED	10-14-46	B.C.

PIPER AIRCRAFT CORP.
LOCK HAVEN, PENNA.

DRAFTSMAN	CHECKER	STANDARDS
B.B.C. 10-14-46	J.E.H. 10-15-46	

10644

432

A432

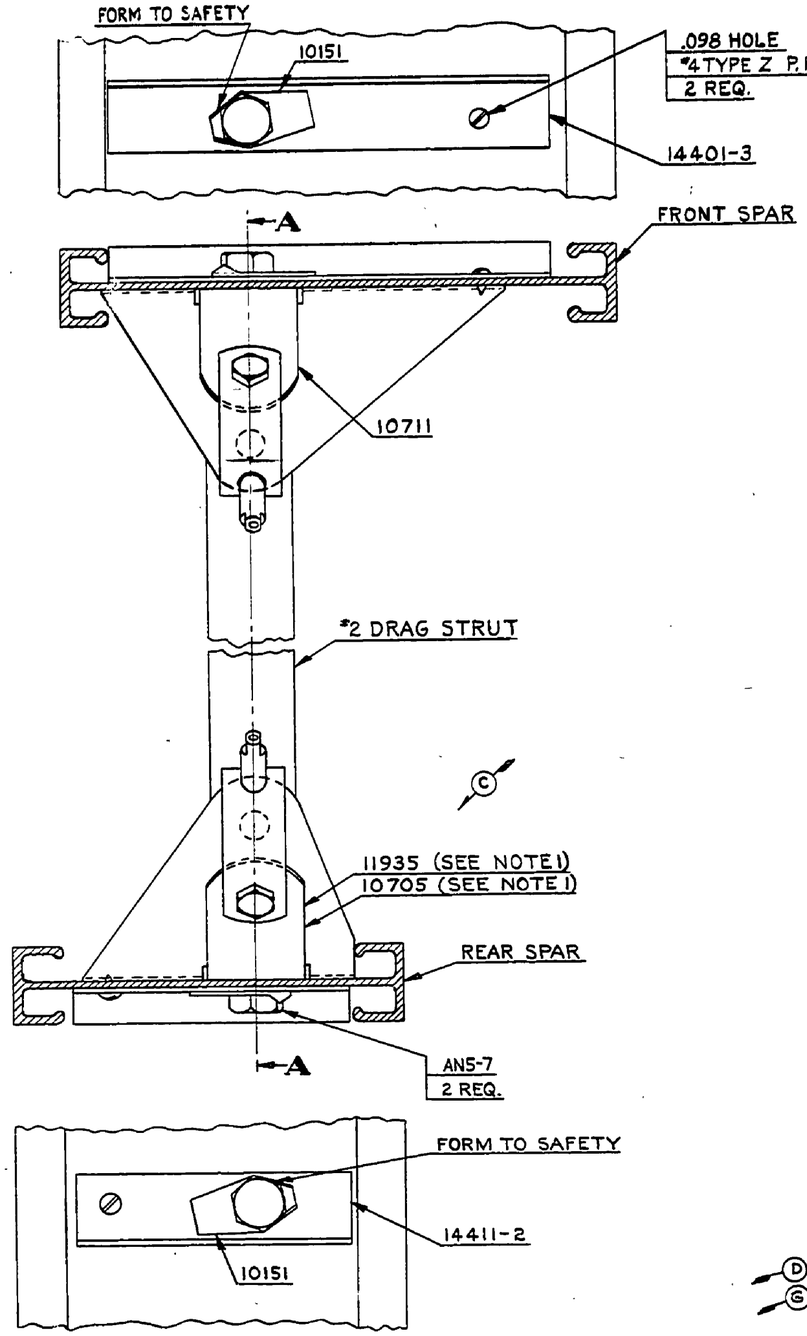

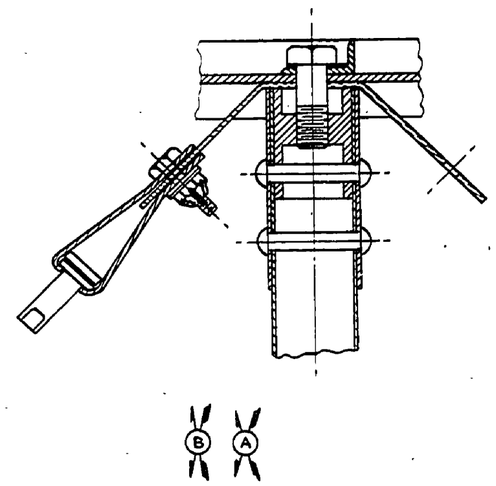

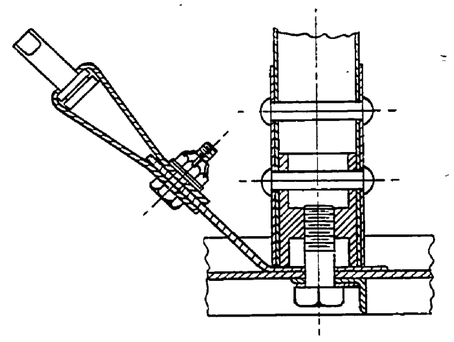

SECTION A-A

NOTE:
1. PULL ASS'Y. 11935 USED IN PLACE OF 10705 ON PA-16 WING PANEL ASS'Y 11777, ON PA-20 WING PANEL ASS'YS. 12483 & 12829, ON PA-22 WING PANEL ASSY. 12483.

*4	2	¼ LONG	RD. HD. TYPE Z P.K. SCREW
AN5-7	2	BOLT	
14411-2	1	ANGLE	
14401-3	1		
10705	1	WIRE PULL ASSY. (SEE NOTE 1)	
11935			
10711	1	WIRE PULL ASS'Y.	
10151	2	LOCK PLATE	
PART NO.	No. REQ.	SIZE / DESCRIPTION	MATERIAL

SCALE FULL SIZE — TOTAL WT.—LBS.
FINISH—PIPER SPECIFICATION #10
MANUFACTURING PRACTICES—PIPER SPECIFICATION #9

STRUT INST.—#2 DRAG

LET.	REVISION	DATE	BY
G	MODEL PA-22 REF. ADDED	11-24-50	F.C.S.
F	REDRAWN WITHOUT CHANGE	5-22-50	C.K.
E	12829 ADDED TO NOTE 1	3-8-50	C.K.
D	NOTE 1 REVISED	10-14-49	R.M.
C	11935 & NOTE 1 ADDED	7-1-48	R.C.
B	10705 & 10711 VIEW REVISED	11-1-46	D.B.
A	BOLTS REVERSED	9-12-46	D.B.

MODEL PA-22 — PER PLANE — NEXT ASSEMBLY — SUPERSEDES — SUP. BY

THIS DRAWING IS THE PROPERTY OF THE PIPER AIRCRAFT CORP. AND ITS POSSESSION BY UNAUTHORIZED PERSONS SHALL NOT BE CONSTRUED AS PERMISSION TO REPRODUCE FOR SALE, IN WHOLE OR IN PART, any DEVICES SHOWN THEREON

PIPER AIRCRAFT CORP.
LOCK HAVEN, PENNA.

L. R.	R. E. T.		
5-7-46	5-9-46		10645
DRAFTSMAN	CHECKER	STANDARDS	

A709

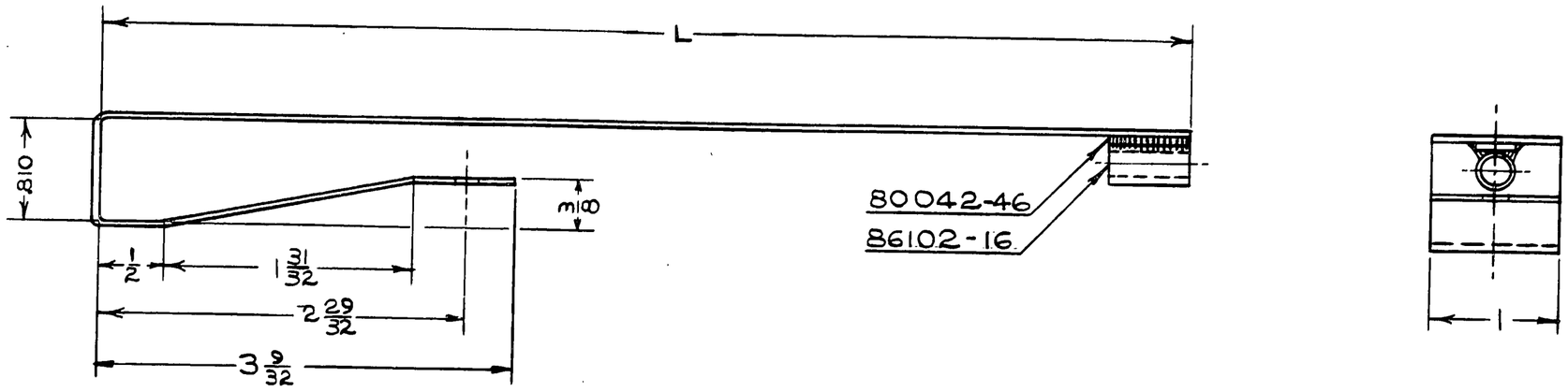

PART NO.	STRAP NO.	L
10648	10648-2	8 13/16
10648-3	10648-4	5 5/16

NOTE: ALL BEND RADII 3/64

PART No.	No. REQ.	SIZE	DESCRIPTION MATERIAL
-4	1	.045×1×9 9/16	#1025 STL.	SEE TABLE
86102-16	1	BUSHING	
80042-46	1	PLATE	
-2	1	.045×1×13 1/16	#1025 STL	SEE TABLE

SCALE FULL SIZE — TOTAL WT.—LBS.

FINISH—PIPER SPECIFICATION #10

MANUFACTURING PRACTICES—PIPER SPECIFICATION #9

STRAP ASSEMBLY-FRONT FUEL TANK

DRAFTSMAN	CHECKER	STANDARDS
BBC 5-13-46	E.F.T. 5-14-46	

10648

LET.	REVISION	DATE	BY
A	-3 & -4 ADDED	5-11-49	R.M.

MODEL	PER PLANE	NEXT ASSEMBLY	SUPERSEDES	SUP. BY

PIPER AIRCRAFT CORP.
LOCK HAVEN, PENNA.

THIS DRAWING IS THE PROPERTY OF THE PIPER AIRCRAFT CORP. AND ITS POSSESSION BY UNAUTHORIZED PERSONS SHALL NOT BE CONSTRUED AS PERMISSION TO REPRODUCE FOR SALE, IN WHOLE OR IN PART. ANY DEVICES SHOWN THEREON.

A433

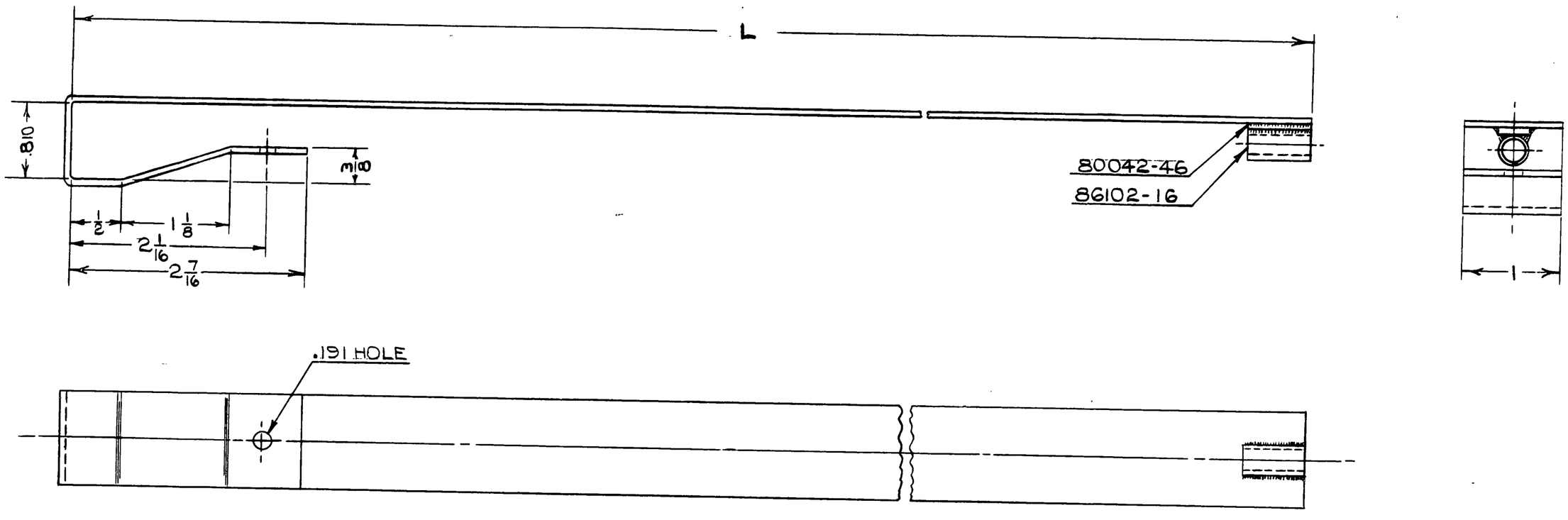

ASSY. NO.	STRAP NO.	L
10649	10649-2	23 1/8
10649-3	10649-4	32 1/8

NOTE:
ALL BEND RADII 3/64 —

-4	1	.045 x 1 x 35 3/8	*1025 STEEL	SEE TABLE
86102-16	1	BUSHING		
80042-46	1	PLATE		
-2	1	.045 x 1 x 31 3/8	*1025 STEEL	SEE TABLE
PART No.	NO. REQ.	SIZE	DESCRIPTION MATERIAL	

SCALE FULL SIZE — TOTAL WT.—LBS.

FINISH—PIPER SPECIFICATION #10

MANUFACTURING PRACTICES—PIPER SPECIFICATION #9

STRAP ASSEMBLY- REAR FUEL TANK

LET.	REVISION	DATE	BY
A	-3 + -4 ADDED	5-11-49	R.M.

THIS DRAWING IS THE PROPERTY OF THE PIPER AIRCRAFT CORP. AND ITS POSSESSION BY UNAUTHORIZED PERSONS SHALL NOT BE CONSTRUED AS PERMISSION TO REPRODUCE FOR SALE, IN WHOLE OR IN PART, ANY DEVICES SHOWN THEREON.

DRAWN	MODEL	PER PLANE	NEXT ASSEMBLY	SUPERSEDES	SUP. BY

PIPER AIRCRAFT CORP.
LOCK HAVEN, PENNA.

DRAFTSMAN	CHECKER	STANDARDS
BBC 5-13-46	R.E.T. 5-14-46	

10649

A434

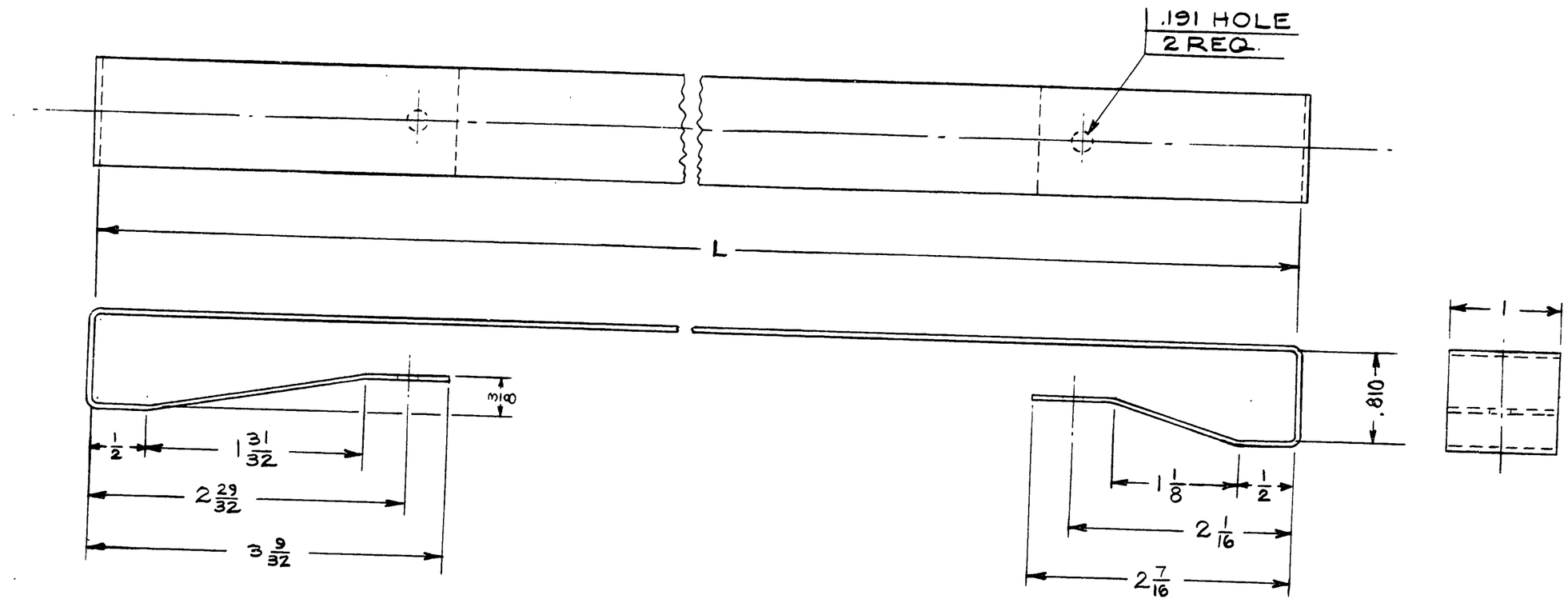

NOTE:
ALL BEND RADII $\frac{3}{64}$.

PART NO.	L
10650	$36\frac{1}{8}$
10650-2	$35\frac{7}{8}$

THIS DRAWING IS THE PROPERTY OF THE PIPER AIRCRAFT CORP. AND ITS POSSESSION BY UNAUTHORIZED PERSONS SHALL NOT BE CONSTRUED AS PERMISSION TO REPRODUCE FOR SALE, IN WHOLE OR IN PART. ANY DEVICES SHOWN THEREON.

LET.	REVISION	DATE	BY
A	-2 ADDED	5-11-45	RM

PART NO.	NO. REQ.	SIZE	DESCRIPTION
		.045 X 1 X NOTED	#1025 STEEL

MATERIAL

SCALE FULL SIZE — TOTAL WT.—LBS.

FINISH—PIPER SPECIFICATION #10

MANUFACTURING PRACTICES—PIPER SPECIFICATION #9

PAT'N	MODEL	PER PLANE	NEXT ASSEMBLY	SUPERSEDES	SUP. BY

PIPER AIRCRAFT CORP.
LOCK HAVEN, PENNA.

STRAP- FUEL TANK

C.E.K.	E.E.T.		
5-13-46	5-14-46		
DRAFTSMAN	CHECKER	STANDARDS	10650

455

A435

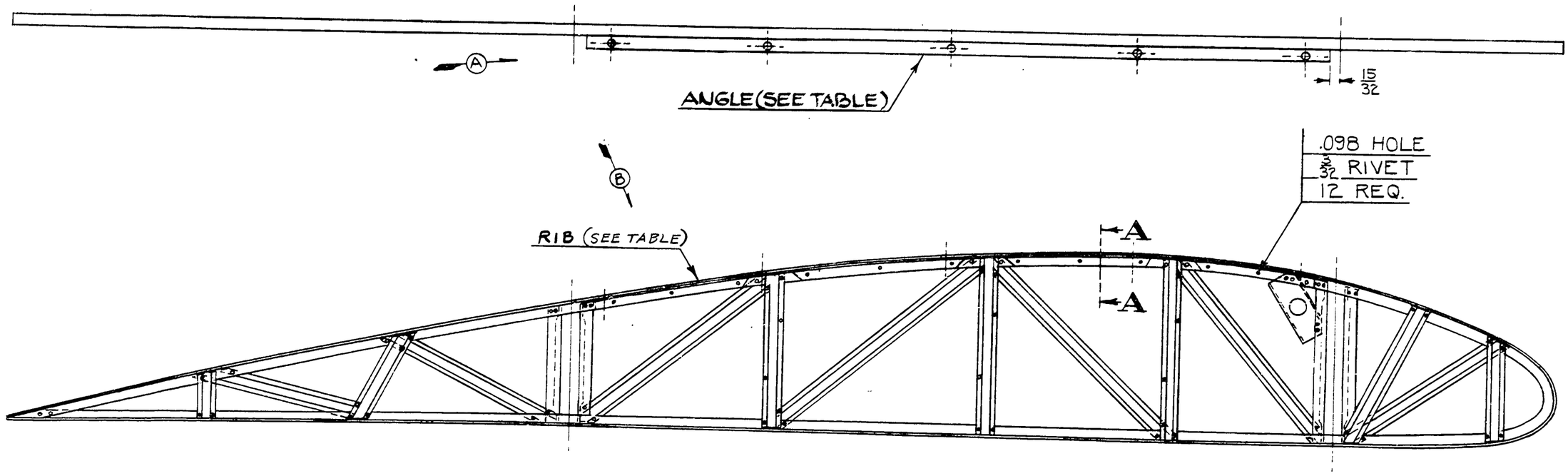

ASSY. NO.	RIB NO.	ANGLE NO.	REMARKS
10653	10907	10636-1	AS SHOWN
10653-2	10907-2	10636-1	AS SHOWN
10653-3	13052-2	10636-1	AS SHOWN
10653-4	13052-2	10636	WITH PART 10636 ASSEMBLED OPP.
10653-5	10907-2	10636	WITH PART 10636 ASSEMBLED OPP.
10653-6	10907	10636	ASSEMBLED OPP.

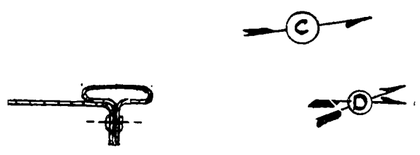

SECTION A-A
FULL SIZE

	12	3/32 × 9/64 L.	STL. TUBULAR CD. PLATED RIVET
SEE TABLE	1	RIB ASSEMBLY	
SEE TABLE	1	SUPPORT ANGLE	
PART NO.	NO. REQ.	SIZE	DESCRIPTION
		MATERIAL	

SCALE 3 IN. = 1 FT. & NOTED — TOTAL WT.—LBS.

FINISH—PIPER SPECIFICATION #10

MANUFACTURING PRACTICES—PIPER SPECIFICATION #9

RIB ASSEMBLY-WING FULL.

LET.	REVISION	DATE	BY
E	-5 & -6 ADDED	2-21-50	C.K.
D	-3 & -4 ADDED & TABLE REVISED	2-1-50	MG
C	-2 & TABLE ADDED.	1-9-50	J.O.
B	10907 WAS 13052-2"	10-11-46	L.R.
A	10636-1 VIEW REVISED	9-13-46	E.L.N.

THIS DRAWING IS THE PROPERTY OF THE PIPER AIRCRAFT CORP. AND ITS POSSESSION BY UNAUTHORIZED PERSONS SHALL NOT BE CONSTRUED AS PERMISSION TO REPRODUCE FOR SALE, IN WHOLE OR IN PART. ANY DEVICES SHOWN THEREON.

RAVN

MODEL	PER PLANE	NEXT ASSEMBLY	SUPERSEDES	SUP. BY

PIPER AIRCRAFT CORP.
LOCK HAVEN, PENNA.

E.L.N.	REL		
5-17-46	5-20-46		10653
DRAFTSMAN	CHECKER	STANDARDS	

A436

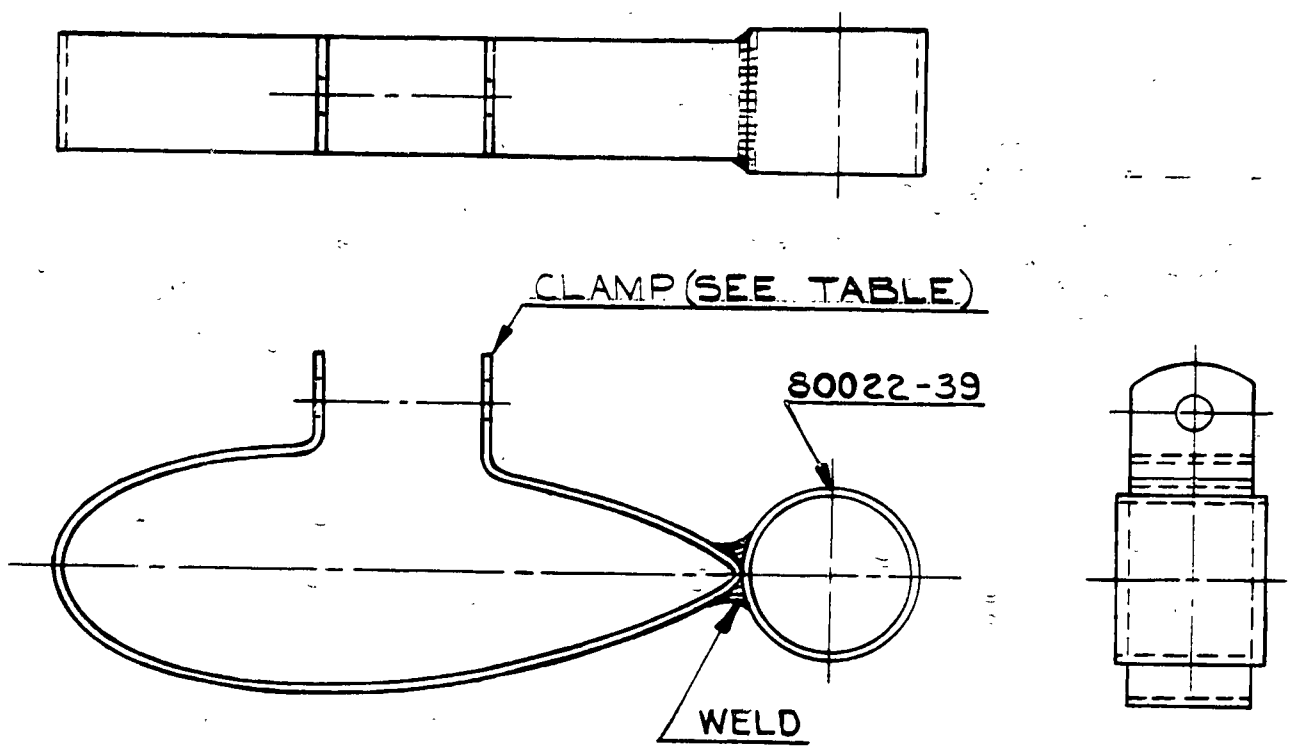

ASS'Y NO.	CLAMP NO
10654	10655
10654-2	10655-2

80022-39	1	BUSHING	
SEE TABLE	1	CLAMP	
PART No.	No. REQ.	NAME / MATERIAL	
SCALE FULL SIZE		TOTAL WT.—LBS.	

FINISH—PIPER SPECIFICATION #10

MANUFACTURING PRACTICES—PIPER SPECIFICATION #9

THIS DRAWING IS THE PROPERTY OF THE PIPER AIRCRAFT CORP. AND ITS POSSESSION BY UNAUTHORIZED PERSONS SHALL NOT BE CONSTRUED AS PERMISSION TO REPRODUCE FOR SALE, IN WHOLE OR IN PART, ANY DEVICES SHOWN THEREON.

LET.	REVISION	DATE	BY
A	-2, TABLE ADDED	2-15-49	JCB

MODEL	PER PLANE	NEXT ASSEMBLY	SUPERSEDES	SUP. BY
PA-11				

PIPER AIRCRAFT CORP.
LOCK HAVEN, PENNA.

CLAMP ASSEMBLY - FRONT STRUT
JURY STRUT

DRAFTSMAN	CHECKER	STANDARDS
J.E.H 5-16-46	R.E.T. 5-21-46	

10654

PENCILTEX A. & B. SMITH CO., PGH., PA.

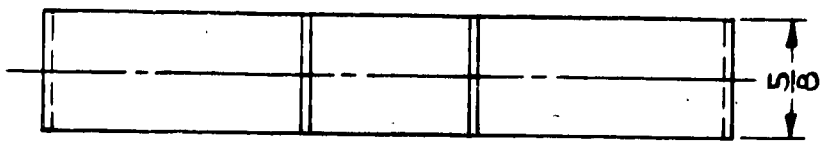

PART NO.	A	B	STRUT SECTION
10655	.888	1.319	10584
10655-2	.951	1.472	10099

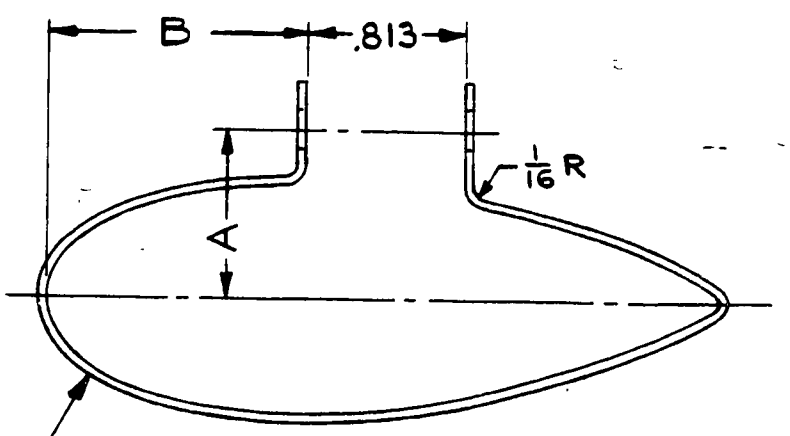

CLAMP FORMED TO FIT FRONT LIFT STRUT SECTION-SEE TABLE

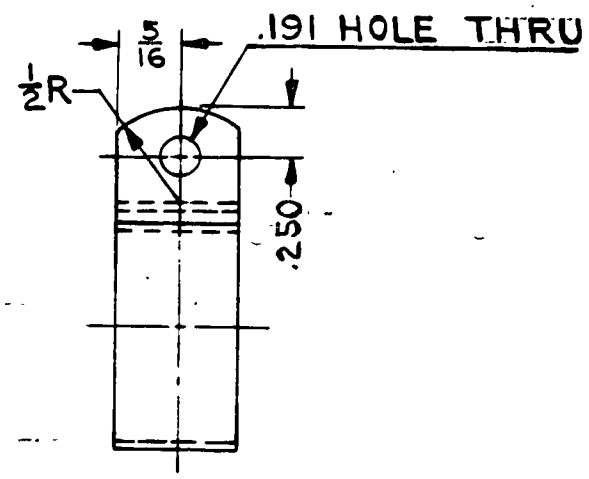

LET.	REVISION	DATE	BY
A	-2. TABLE ADDED	2-15-49	JCB

THIS DRAWING IS THE PROPERTY OF THE PIPER AIRCRAFT CORP. AND ITS POSSESSION BY UNAUTHORIZED PERSONS SHALL NOT BE CONSTRUED AS PERMISSION TO REPRODUCE FOR SALE, IN WHOLE OR IN PART, ANY DEVICES SHOWN THEREON.

PART	MODEL	PER PLANE	NEXT ASSEMBLY	SUPERSEDES	SUP. BY
PA-11					

PIPER AIRCRAFT CORP.
LOCK HAVEN, PENNA.

PART No.	No. REQ.	SIZE	DESCRIPTION
SEE TABLE	DWG. REF. ONLY	.045 × 5/8 × 8 1/4	FRONT LIFT STRUT SECTION #1025 STEEL

MATERIAL

SCALE FULL SIZE | TOTAL WT.—LBS.

FINISH—PIPER SPECIFICATION #10

MANUFACTURING PRACTICES—PIPER SPECIFICATION #9

CLAMP - FRONT LIFT STRUT

DRAFTSMAN	CHECKER	STANDARDS
J.E.H. 5-16-46	R.E.T. 5-21-46	

10655

PENCILTEX A. & B. SMITH CO., PGH., PA.

29

A29

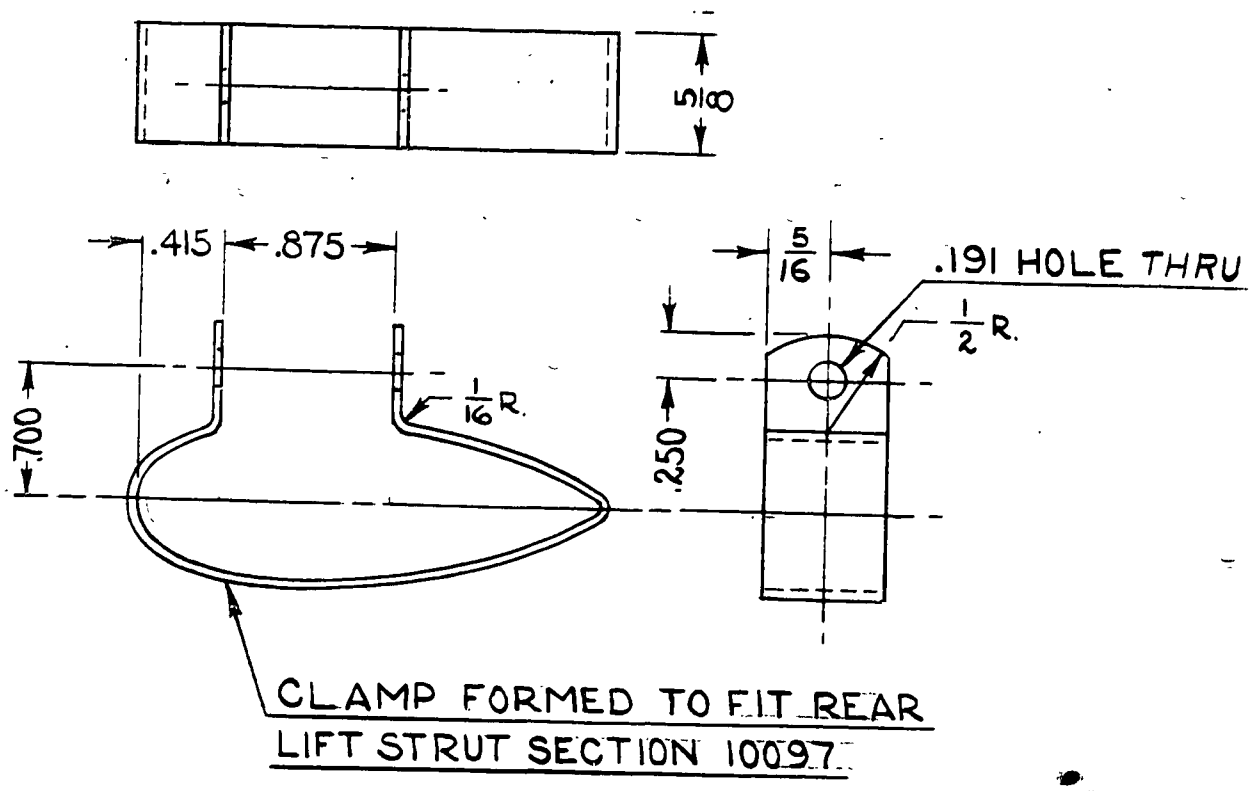

10097	DWG. REF. ONLY	REAR LIFT STRUT SECTION		
		.045 x 5/8 x 5 1/2	#1025 STEEL	
PART No.	No. REQ.	SIZE	DESCRIPTION	MATERIAL
SCALE FULL SIZE				TOTAL WT.—LBS.

FINISH—PIPER SPECIFICATION #10

MANUFACTURING PRACTICES—PIPER SPECIFICATION #9

CLAMP - REAR STRUT JURY STRUT

THIS DRAWING IS THE PROPERTY OF THE PIPER AIRCRAFT CORP. AND ITS POSSESSION BY UNAUTHORIZED PERSONS SHALL NOT BE CONSTRUED AS PERMISSION TO REPRODUCE FOR SALE, IN WHOLE OR IN PART, ANY DEVICES SHOWN THEREON.

LET.	REVISION	DATE	BY
A	REDRAWN & REVISED	5-6-47	C.L.W.

MODEL	PER PLANE	NEXT ASSEMBLY	SUPERSEDES	SUP. BY

PIPER AIRCRAFT CORP.
LOCK HAVEN, PENNA.

DRAFTSMAN	CHECKER	STANDARDS
C. L. W. 5-6-47	R. D. M. 5-6-47	

10656

PENCILTEX A. & B. SMITH CO., PGH., PA.

A30

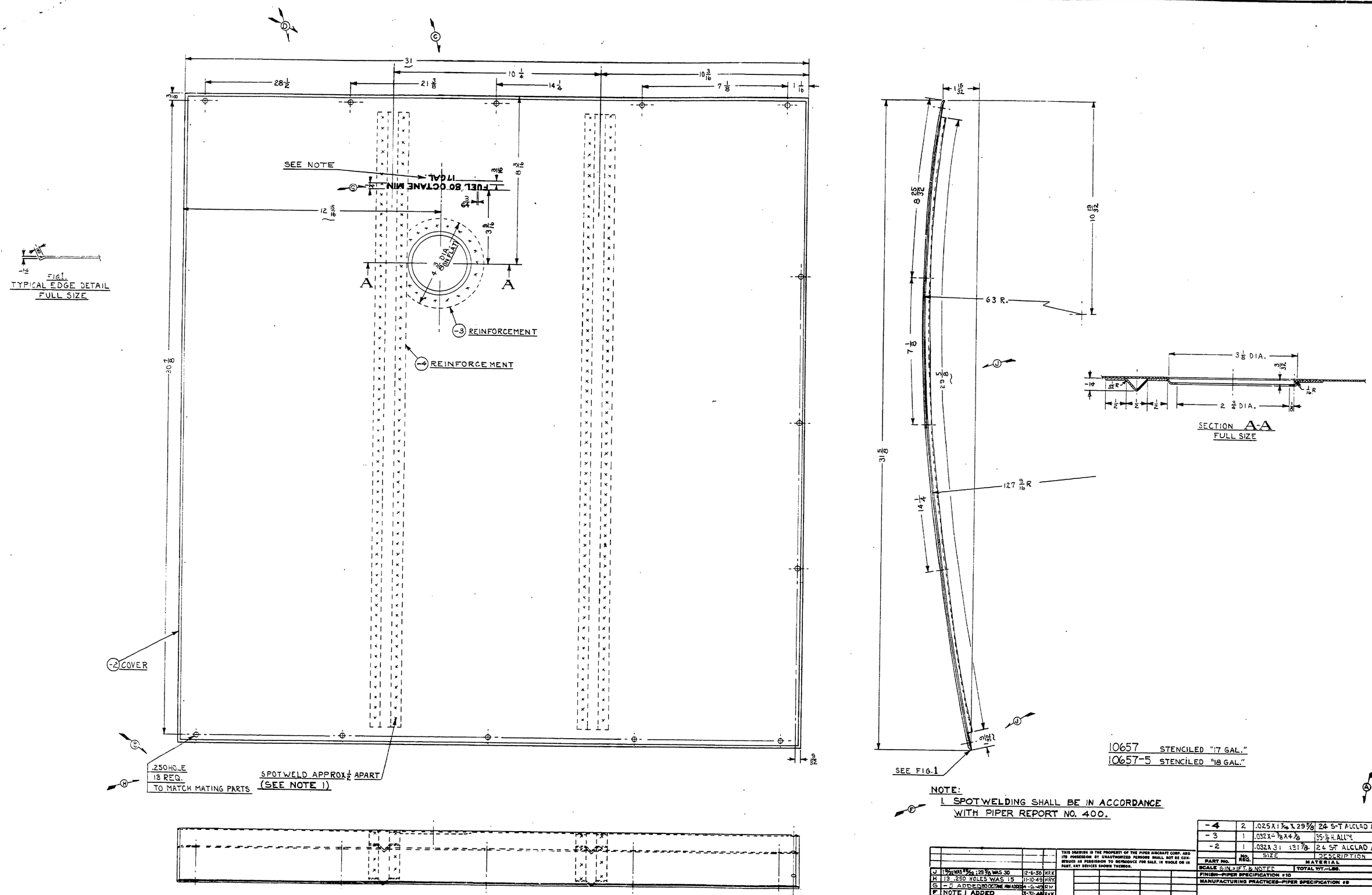

10657 STENCILED "17 GAL."
10657-5 STENCILED "18 GAL."

NOTE:
1. SPOTWELDING SHALL BE IN ACCORDANCE WITH PIPER REPORT NO. 400.

PART NO.	No. REQ.	SIZE	DESCRIPTION
-4	2	.025 X 1 3/4 X 29 5/8	24 S-T ALCLAD ALUM.
-3	1	.032 X 4 3/8 X 4 3/8	35-1/2 H. ALUM.
-2	1	.032 X 31 X 31 7/8	24 S-T ALCLAD ALUM.

MATERIAL

SCALE 6 IN. = 1 FT. & NOTED — TOTAL WT.—LBS.

FINISH—PIPER SPECIFICATION #10

MANUFACTURING PRACTICES—PIPER SPECIFICATION #9

LET.	REVISION	DATE	BY
J	1 15/32 WAS 1 15/32; 29 5/8 WAS 30	12-6-50	HRK
H	13 .250 HOLES WAS 15	11-10-49	HRK
G	-5 ADDED 80 OCTANE MIN ADDED	4-6-49	RM
F	NOTE 1 ADDED	3-31-48	HKK
E	5 .250 HOLES REMOVED	5-6-47	HMZ
D	31 WAS 33 5/8; 12 15/16 WAS 12 5/16	5-6-47	HMZ
C	PLACARDING ADDED	6-17-47	HMZ
B	.250 HOLE WAS .191 HOLE	10-3-46	LR.
A	FOR -2 & -4 24 S-T ALCLAD ALUM. WAS 24 S-T ALUM.	8-27-46	JH.

THIS DRAWING IS THE PROPERTY OF THE PIPER AIRCRAFT CORP. AND ITS POSSESSION BY UNAUTHORIZED PERSONS SHALL NOT BE CONSTRUED AS PERMISSION TO REPRODUCE FOR SALE, IN WHOLE OR IN PART, ANY DEVICES SHOWN THEREON.

MODEL | PER PLANE | NEXT ASSEMBLY | SUPERSEDES | SUP. BY

PIPER AIRCRAFT CORP.
LOCK HAVEN, PENNA.

COVER ASSEMBLY-FUEL TANK

DRAFTSMAN: HMZ 5-20-46 | CHECKER: R.E.F. 5-22-46 | STANDARDS

10657

A835

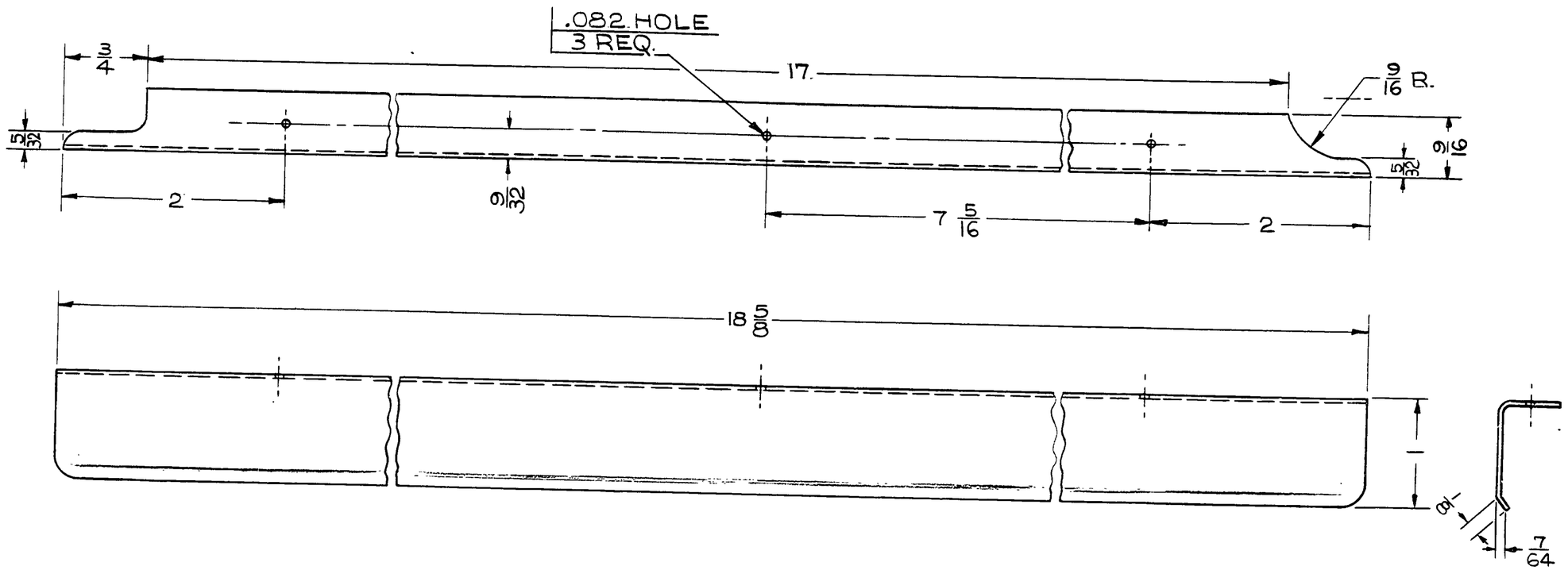

NOTES:

1. ALL BEND RADII 1/32.
2. ALL OUTSIDE CORNERS MAY HAVE 7/32 RADII AND INSIDE CORNERS 5/32 RADII, UNLESS OTHERWISE NOTED.

THIS DRAWING IS THE PROPERTY OF THE PIPER AIRCRAFT CORP. AND ITS POSSESSION BY UNAUTHORIZED PERSONS SHALL NOT BE CONSTRUED AS PERMISSION TO REPRODUCE FOR SALE, IN WHOLE OR IN PART, ANY DEVICES SHOWN THEREON.

LET.	REVISION	DATE	BY

MODEL	PER PLANE	NEXT ASSEMBLY	SUPERSEDES	SUP. BY

PIPER AIRCRAFT CORP.
LOCK HAVEN, PENNA.

PART No.	No. REQ.	SIZE	DESCRIPTION
		.020 x 1 9/16 x 18 5/8	3S-1/2H. ALUM.
		MATERIAL	

SCALE FULL SIZE — TOTAL WT.—LBS.

FINISH—PIPER SPECIFICATION #10

MANUFACTURING PRACTICES—PIPER SPECIFICATION #9

TRIMSTRIP

DRAFTSMAN	CHECKER	STANDARDS
BBC 5-24-46	E.E.T. 5-24-46	

10668

437

A437

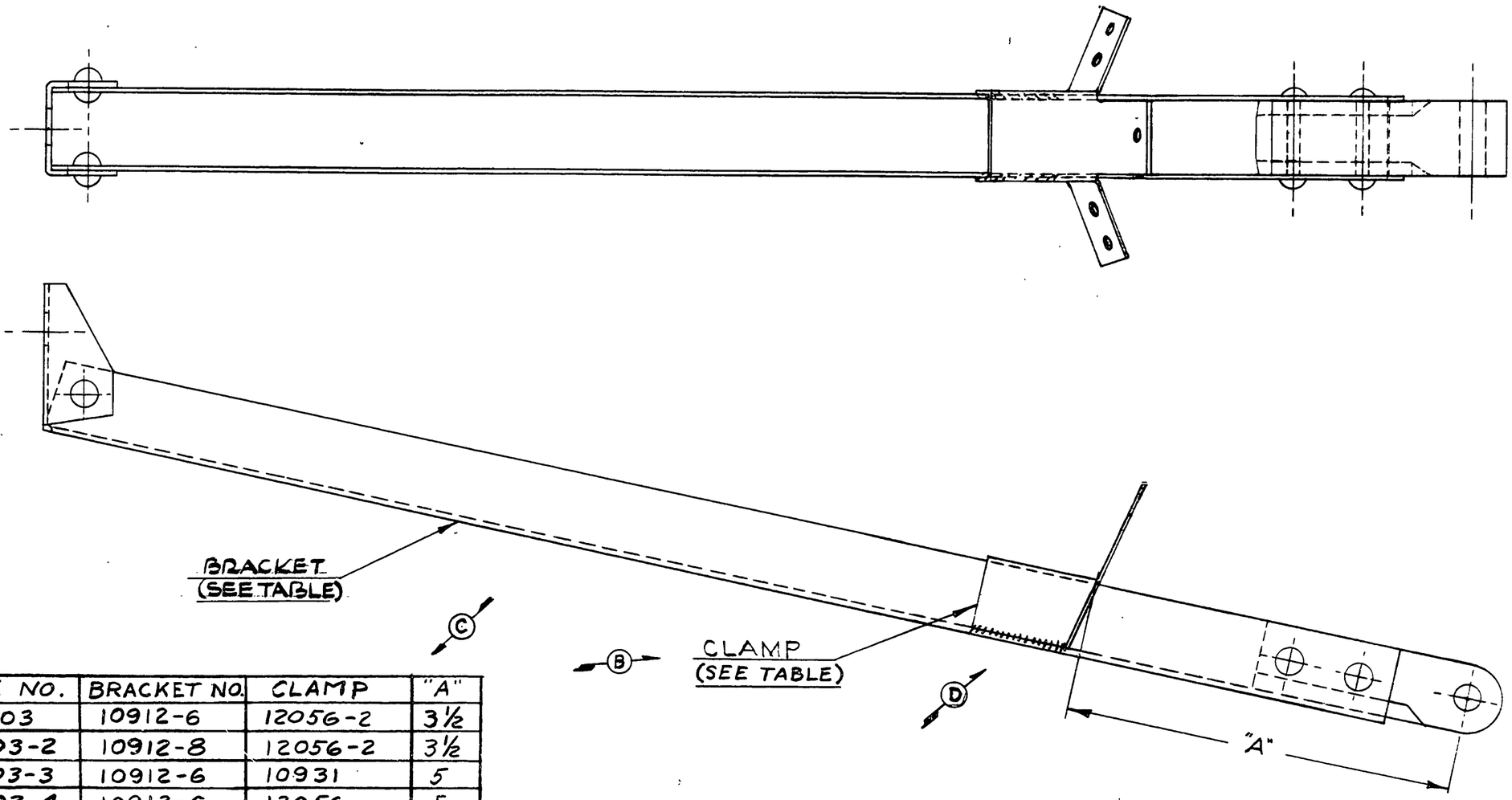

ASS'Y. NO.	BRACKET NO.	CLAMP	"A"
10703	10912-6	12056-2	3½
10703-2	10912-8	12056-2	3½
10703-3	10912-6	10931	5
10703-4	10912-6	12056	5

PART No.	No. REQ.	SIZE / DESCRIPTION / MATERIAL
10931 12056 12056-2	1	CLAMP (SEE TABLE)
10912-8 10912-6	1	BRACKET ASSY. (SEE TABLE)

SCALE FULL SIZE — TOTAL WT.–LBS.

FINISH—PIPER SPECIFICATION #10

MANUFACTURING PRACTICES—PIPER SPECIFICATION #9

BRACKET ASSEMBLY— AILERON HINGE

LET.	REVISION	DATE	BY
E	5 WAS 4⅞ FOR -4	2-21-50	C.K.
D	*6-32 MACH. SCR., #4 PK. SCR. & #22M62 E.S. NUT REM. WELD ADDED	1-25-50	C.K.
C	-3 & -4 ADDED.	12-29-49	J.O.
B	12056-2 WAS 10931-2	11-17-49	C.K.
A	-2 & TABLE ADDED	7-1-48	PC

MODEL	PER PLANE	NEXT ASSEMBLY	SUPERSEDES	SUP. BY

THIS DRAWING IS THE PROPERTY OF THE PIPER AIRCRAFT CORP. AND ITS POSSESSION BY UNAUTHORIZED PERSONS SHALL NOT BE CONSTRUED AS PERMISSION TO REPRODUCE FOR SALE, IN WHOLE OR IN PART, ANY DEVICES SHOWN THEREON.

PIPER AIRCRAFT CORP.
LOCK HAVEN, PENNA.

DRAFTSMAN	CHECKER	STANDARDS
BBC 6-19-46	R.E.T. 6-25-46	

10703

A438

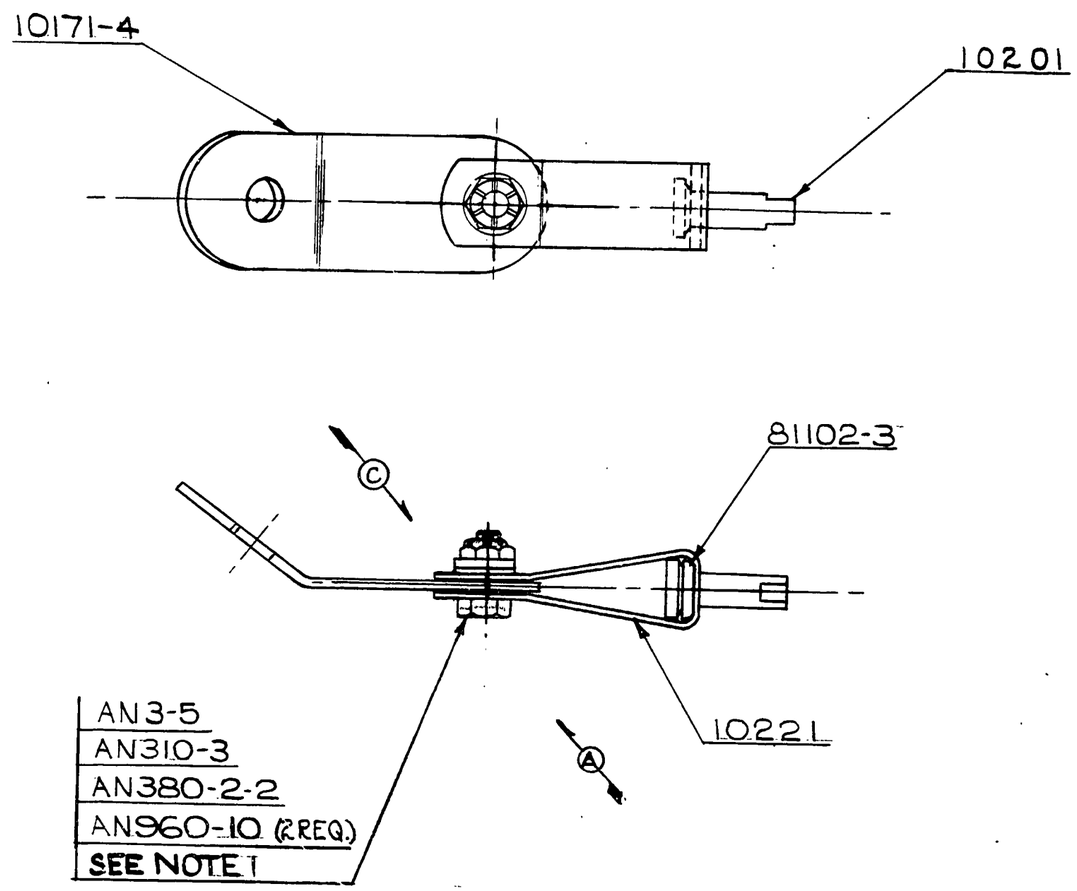

NOTE:

1. WHERE "SEE NOTE 1" IS INDICATED ELASTIC STOP NUTS (TYPE 22M OR 42E) AND UNDRILLED BOLTS MAY BE USED

PART No.	No. REQ.	MATERIAL NAME
AN960-10	2	WASHER
AN380-2-2	1	COTTER PIN
AN310-3	1	NUT
AN3-5	1	BOLT
81102-3	1	WASHER
10201	1	NIPPLE
10221	1	CLEVIS
10171-4	1	DRAG WIRE PULL FITTING

SCALE FULL SIZE — TOTAL WT.—LBS.

FINISH—PIPER SPECIFICATION #10

MANUFACTURING PRACTICES—PIPER SPECIFICATION #9

PULL ASSEMBLY—DRAG WIRE

LET.	REVISION	DATE	BY
D	NOTE 1. REVISED	12-31-46	I.M.M.
C	10F AN960-10 ADDED	11-31-46	HMZ
B	13401 & 13431 ALT. REM.	8-29-46	I.M.
A	BOLT REVERSED	8-29-46	L.R.

MODEL	PER PLANE	NEXT ASSEMBLY	SUPERSEDES	SUP. BY
J3	4	14302, 14312		

THIS DRAWING IS THE PROPERTY OF THE PIPER AIRCRAFT CORP. AND ITS POSSESSION BY UNAUTHORIZED PERSONS SHALL NOT BE CONSTRUED AS PERMISSION TO REPRODUCE FOR SALE, IN WHOLE OR IN PART, ANY DEVICES SHOWN THEREON.

PIPER AIRCRAFT CORP.
LOCK HAVEN, PENNA.

DRAFTSMAN	CHECKER	STANDARDS
BBC 6-17-46	R.E.T. 6-25-46	

10705

439

A439

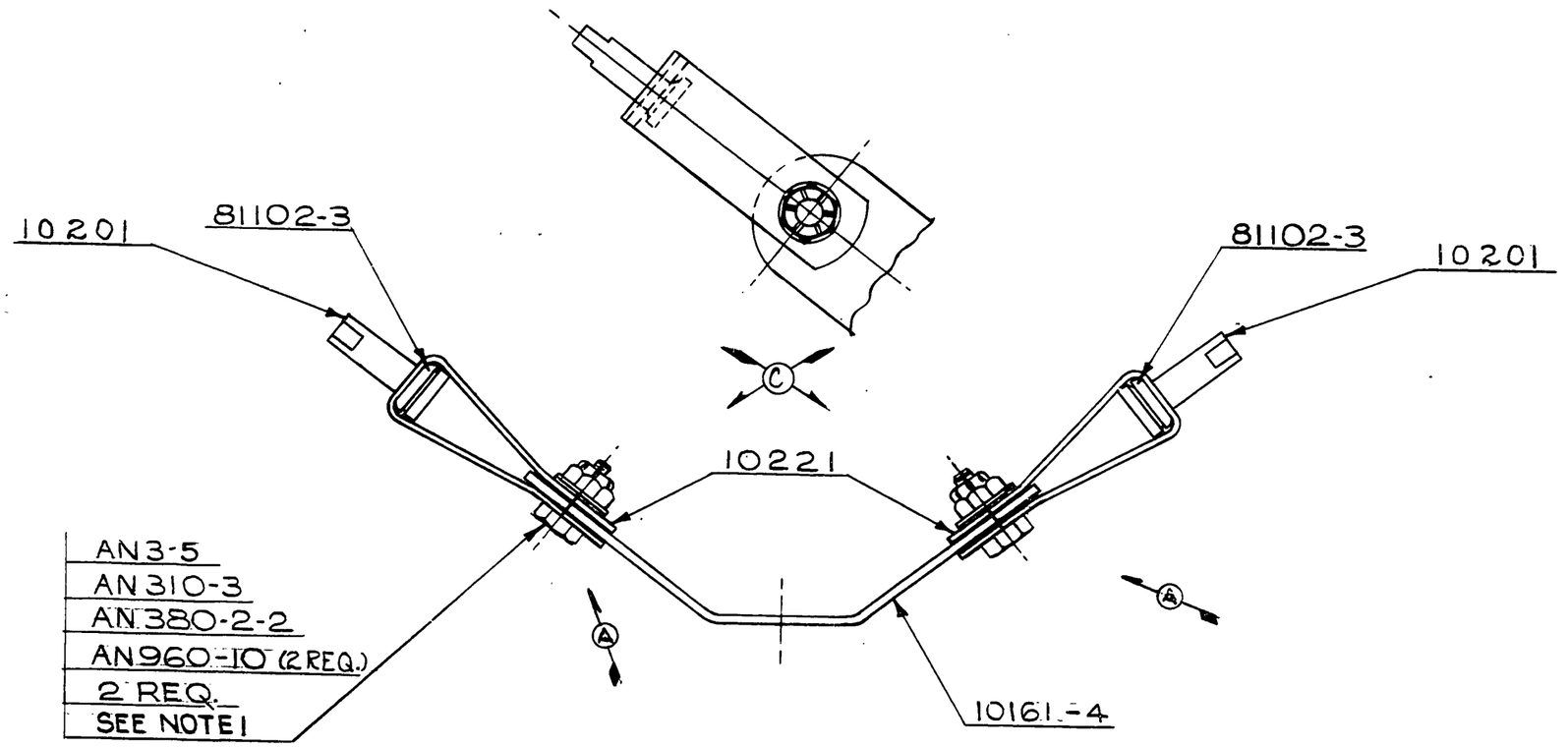

NOTE:

1. WHERE "SEE NOTE 1" IS INDICATED ELASTIC STOP NUTS (TYPE 22M OR 42E) AND UNDRILLED BOLTS MAY BE USED

PART No.	No. REQ.	NAME — MATERIAL
AN960-10	4	WASHER
AN380-2-2	2	COTTER PIN
AN310-3	2	NUT
AN3-5	2	BOLT
81102-3	2	WASHER
10201	2	NIPPLE
10221	2	CLEVIS
10161-4	1	DRAG WIRE PULL FITTING

LET.	REVISION	DATE	BY
D	NOTE 1. REVISED	12-31-46	I.M.M.
C	20 OF AN960-10 ADDED	11-31-46	H.M.Z.
B	13401 & 13431 ALT. REM.	8-29-46	I.M.
A	BOLTS REVERSED	8-29-46	L.R.

MODEL	PER PLANE	NEXT ASSEMBLY	SUPERSEDES	SUP. BY
J3	B	14252		

THIS DRAWING IS THE PROPERTY OF THE PIPER AIRCRAFT CORP. AND ITS POSSESSION BY UNAUTHORIZED PERSONS SHALL NOT BE CONSTRUED AS PERMISSION TO REPRODUCE FOR SALE, IN WHOLE OR IN PART, ANY DEVICES SHOWN THEREON.

PIPER AIRCRAFT CORP.
LOCK HAVEN, PENNA.

SCALE FULL SIZE — TOTAL WT.-LBS.
FINISH—PIPER SPECIFICATION #10
MANUFACTURING PRACTICES—PIPER SPECIFICATION #9

PULL ASSEMBLY—
DRAG WIRE

DRAFTSMAN	CHECKER	STANDARDS
B.B.C. 6-17-46	R.E.T. 6-25-46	

10706

A440

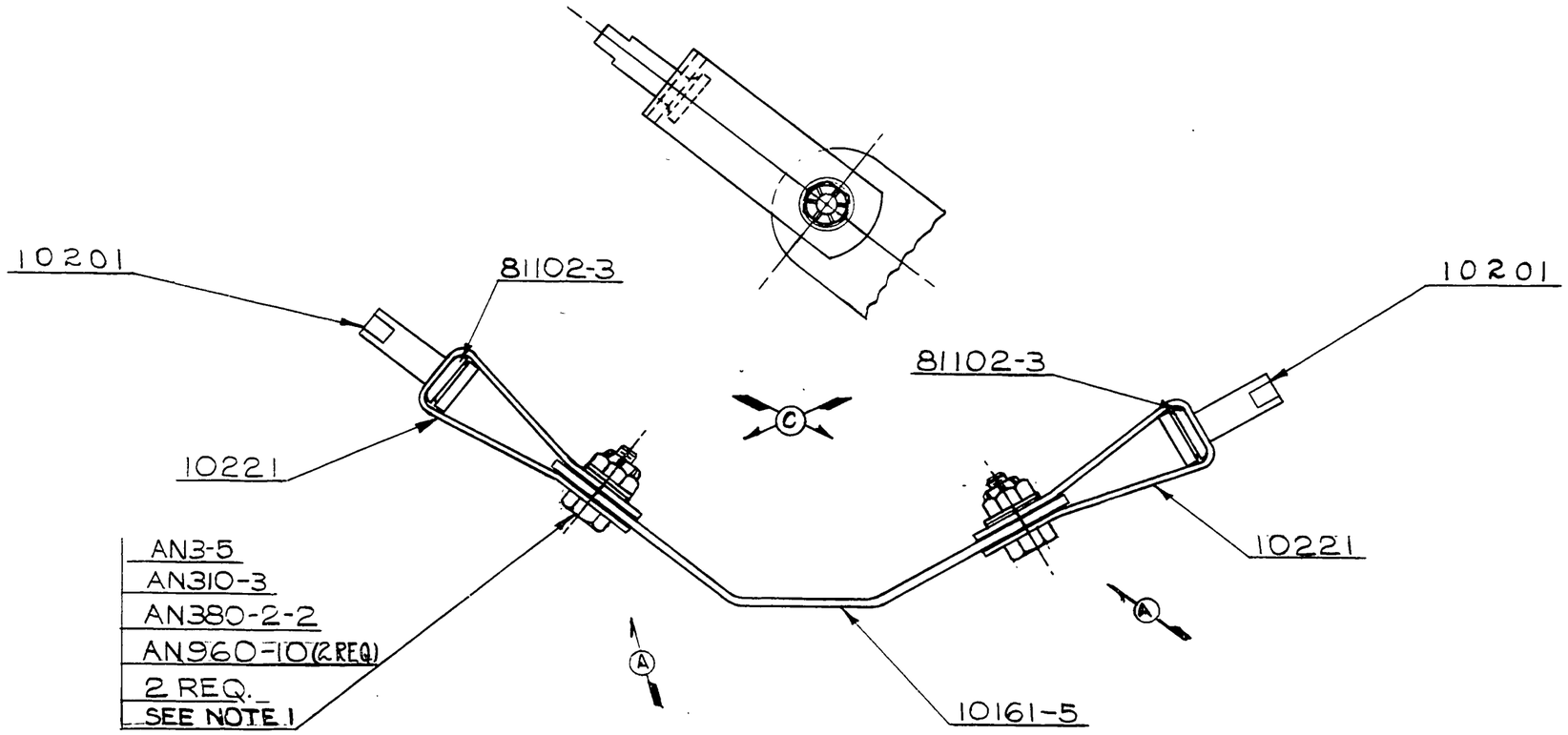

NOTE:
1 WHERE 'SEE NOTE 1' IS INDICATED ELASTIC STOP NUTS (TYPE 22M OR 42E) MAY BE USED.

PART No.	No. REQ.	NAME — MATERIAL
AN960-10	4	WASHER
AN380-2-2	2	COTTER PIN
AN310-3	2	NUT
AN3-5	2	BOLT
81102-3	2	WASHER
10201	2	NIPPLE
10221	2	CLEVIS
10161-5	1	DRAG WIRE PULL FITTING

THIS DRAWING IS THE PROPERTY OF THE PIPER AIRCRAFT CORP. AND ITS POSSESSION BY UNAUTHORIZED PERSONS SHALL NOT BE CONSTRUED AS PERMISSION TO REPRODUCE FOR SALE, IN WHOLE OR IN PART, ANY DEVICES SKOWN THEREON.

LET.	REVISION	DATE	BY
C	20F AN960-10 ADDED	11-31-46	HMZ
B	13401 & 13431 ALT. REM.	8-30-46	I.M.
A	BOLTS REVERSED	8-29-46	L.R.

MODEL	PER PLANE	NEXT ASSEMBLY	SUPERSEDES	SUP. BY
J3	4	14283, 14433		

SCALE FULL SIZE — TOTAL WT.—LBS.
FINISH—PIPER SPECIFICATION #10
MANUFACTURING PRACTICES—PIPER SPECIFICATION #9

PIPER AIRCRAFT CORP.
LOCK HAVEN, PENNA.

PULL ASSEMBLY—
DRAG WIRE

DRAFTSMAN	CHECKER	STANDARDS
BBC 6-18-46	E.E.T. 6-25-46	

10707

441

A441

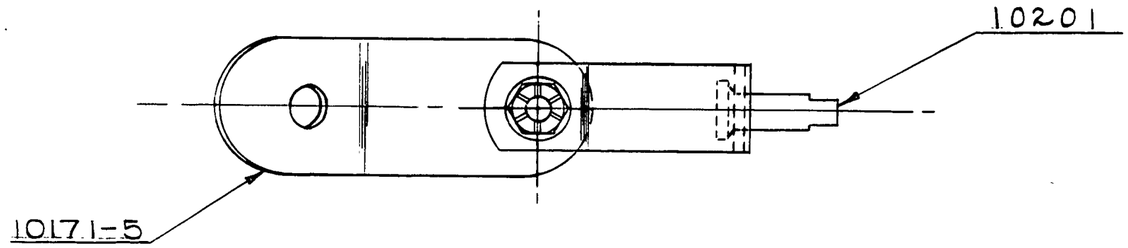

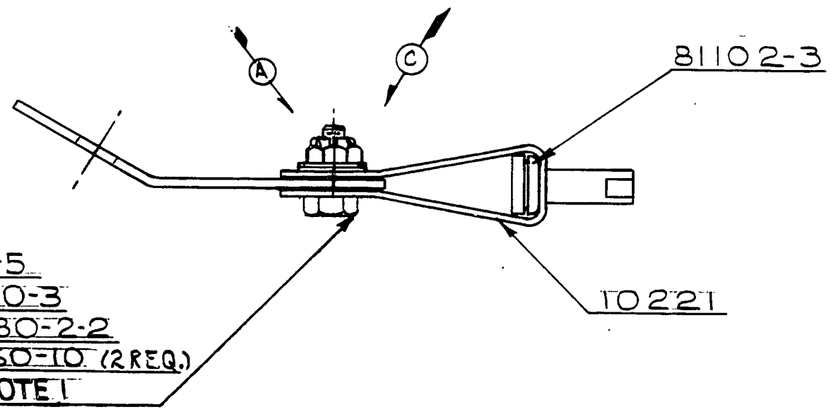

AN 3-5
AN310-3
AN380-2-2
AN960-10 (2 REQ.)
SEE NOTE 1

D

NOTE:

1. WHERE "SEE NOTE 1" IS INDICATED ELASTIC STOP NUTS (TYPE 22M OR 42E) AND UNDRILLED BOLTS MAY BE USED

PART No.	No. REQ.	NAME / MATERIAL
AN960-10	2	WASHER
AN380-2-2	1	COTTER PIN
AN310-3	1	NUT
AN3-5	1	BOLT
81102-3	1	WASHER
10201	1	NIPPLE
10221	1	CLEVIS
10171-5	1	DRAG WIRE PULL FITTING

THIS DRAWING IS THE PROPERTY OF THE PIPER AIRCRAFT CORP. AND ITS POSSESSION BY UNAUTHORIZED PERSONS SHALL NOT BE CONSTRUED AS PERMISSION TO REPRODUCE FOR SALE, IN WHOLE OR IN PART, ANY DEVICES SHOWN THEREON.

LET.	REVISION	DATE	BY
D	NOTE 1. REVISED	12-31-46	I.M.M.
C	10F AN360-10 ADDED	11-31-46	HMZ
B	13401 & 13431 ALT. REM.	8-30-46	I.M.
A	BOLT REVERSED	8-29-46	L.R.

MODEL	PER PLANE	NEXT ASSEMBLY	SUPERSEDES	SUP. BY
J3	4	A442		

PIPER AIRCRAFT CORP.
LOCK HAVEN, PENNA.

SCALE FULL SIZE — TOTAL WT.—LBS.
FINISH—PIPER SPECIFICATION #10
MANUFACTURING PRACTICES—PIPER SPECIFICATION #9

PULL ASSEMBLY— DRAG WIRE

DRAFTSMAN	CHECKER	STANDARDS
BBC 6-18-46	R.E.T. 6-25-46	

10700

442

A442

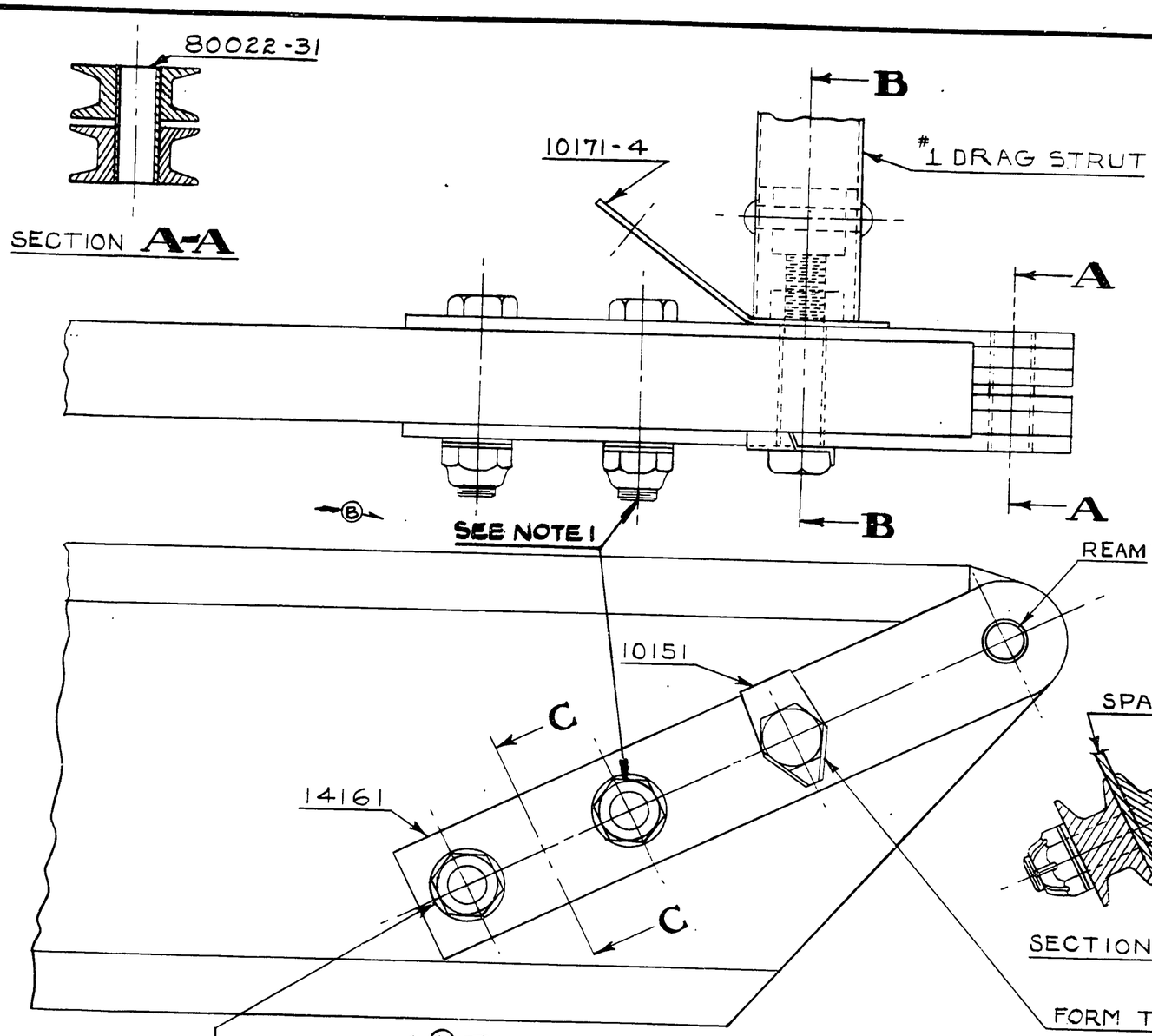

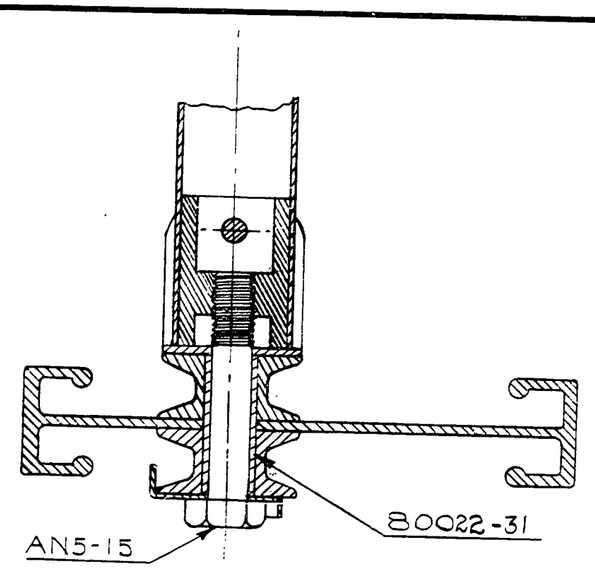

NOTE:
1. ON PA-16 WING PANEL ASS'Y. 11777, BOLT WHERE "SEE NOTE 1" IS INDICATED, IS INSTALLED OPPOSITE OF BOLT SHOWN.

PART No.	No. REQ.	NAME / MATERIAL
AN960-616	4	WASHER
	2	ELASTIC STOP NUT #42E064
AN6-15A	2	BOLT
AN5-15	1	BOLT
80022-31	2	BUSHING
14161	2	BUTT HINGE FITTING
10171-4	1	WIRE PULL
10151	1	LOCK PLATE

SCALE FULL SIZE — TOTAL WT.—LBS.
FINISH—PIPER SPECIFICATION #10
MANUFACTURING PRACTICES—PIPER SPECIFICATION #9

FITTINGS INSTALLATION — WING BUTT REAR SPAR

LET.	REVISION	DATE	BY
C	80022-31 WAS 80012-16	8-11-48	H.R.K.
B	NOTE 1 ADDED	7-1-48	DC
A	AN6-15A WAS AN6-15	12-31-46	I.M.M.

PA-11

MODEL	PER PLANE	NEXT ASSEMBLY	SUPERSEDES	SUP. BY

THIS DRAWING IS THE PROPERTY OF THE PIPER AIRCRAFT CORP. AND ITS POSSESSION BY UNAUTHORIZED PERSONS SHALL NOT BE CONSTRUED AS PERMISSION TO REPRODUCE FOR SALE, IN WHOLE OR IN PART, ANY DEVICES SHOWN THEREON.

PIPER AIRCRAFT CORP.
LOCK HAVEN, PENNA.

DRAFTSMAN	CHECKER	STANDARDS
I.D.B 6-18-46	E.E.T. 6-19-46	

10710

443

A443

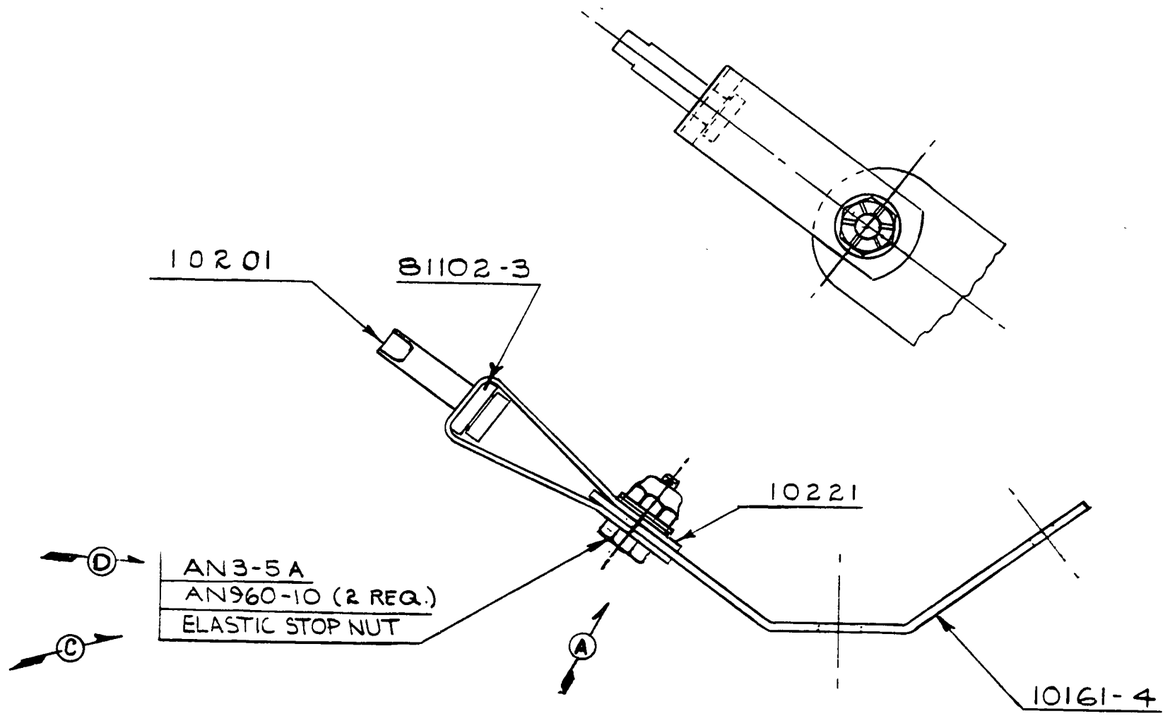

	1	ELASTIC STOP NUT #22M02
AN960-10	2	WASHER
AN3-5A	1	BOLT
B1102-3	1	WASHER
10201	1	NIPPLE
10221	1	CLEVIS
10161-4	1	DRAG WIRE PULL FITTING
PART No.	No. REQ.	NAME
		MATERIAL

SCALE FULL SIZE — TOTAL WT.–LBS.

FINISH–PIPER SPECIFICATION #10

MANUFACTURING PRACTICES–PIPER SPECIFICATION #9

THIS DRAWING IS THE PROPERTY OF THE PIPER AIRCRAFT CORP. AND ITS POSSESSION BY UNAUTHORIZED PERSONS SHALL NOT BE CONSTRUED AS PERMISSION TO REPRODUCE FOR SALE, IN WHOLE OR IN PART, ANY DEVICES SHOWN THEREON.

LET.	REVISION	DATE	BY
D	AN3-5A WAS AN3-5	1-2-47	I.M.
C	T/F AN960-10 ADDED	11-31-46	I.D.B.
B	13401 & 13431 ALT. REM.	8-30-46	I.M.
A	BOLT REVERSED	8-29-46	L.R.

MODEL	PER PLANE	NEXT ASSEMBLY	SUPERSEDES	SUP. BY
PA-11				

PIPER AIRCRAFT CORP.
LOCK HAVEN, PENNA.

PULL ASSEMBLY–
DRAG WIRE

DRAFTSMAN	CHECKER	STANDARDS
J.D.B. 6-19-46	E.E.T. 6-21-46	

10711

A444

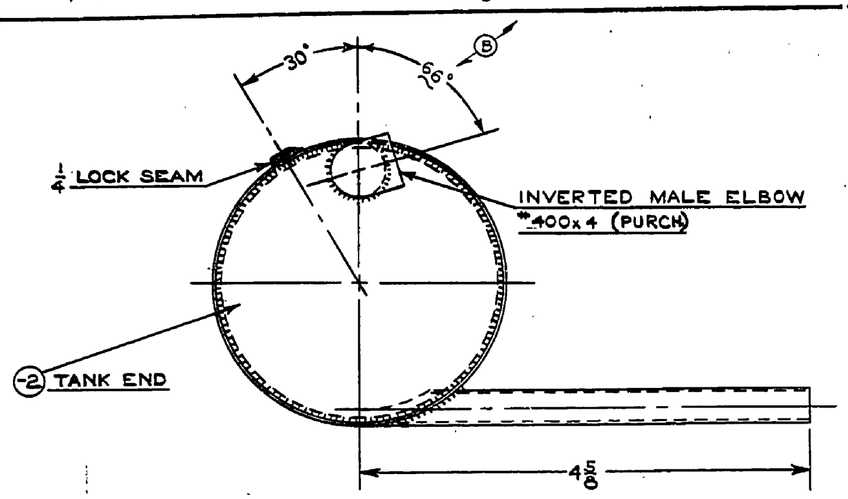

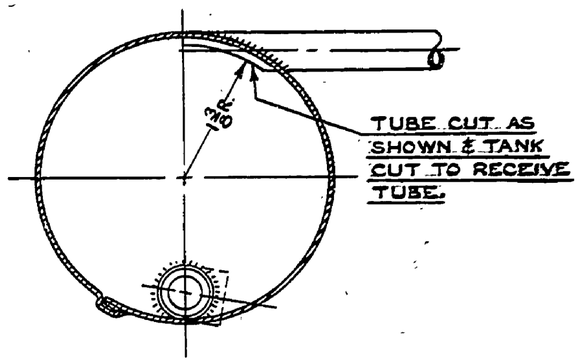

SECTION A-A

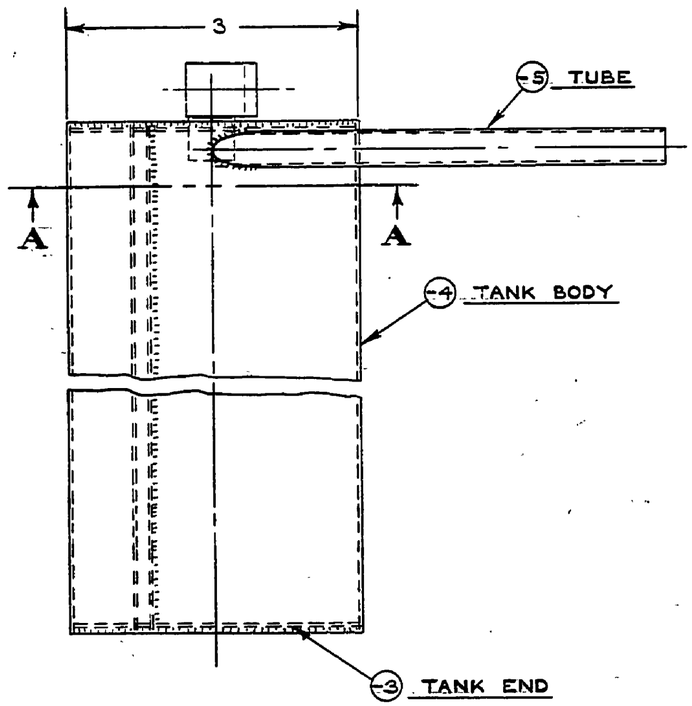

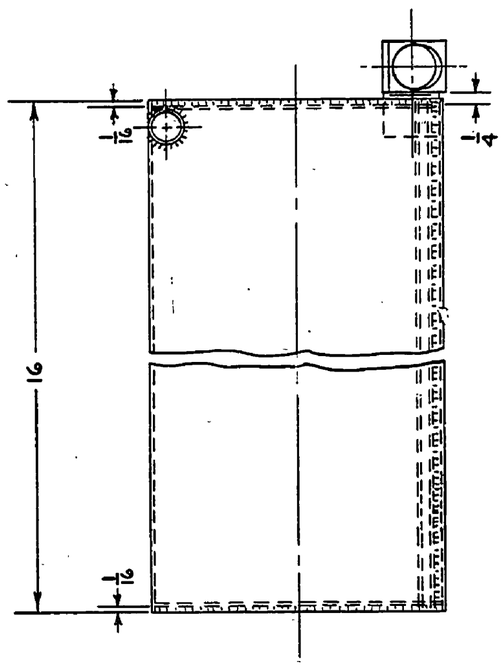

NOTE:
TANK ASSEMBLED WITH SOLDER.

PART NO.	NO. REQ.	SIZE	DESCRIPTION MATERIAL
	1	3/4	*400x4 INVERTED MALE ELBOW
-5	1	3/8 x .032 x 4 5/8	COPPER TUBE
-4	1	.012 x 10 3/16 x 16	TYPE J2
-3	1	.012 x 2 15/16 DIA.	ANNEALED 2D FINISH
-2	1	.012 x 2 15/16 DIA.	ST. STEEL

SCALE FULL SIZE | TOTAL WT. -LBS.
FINISH—PIPER SPECIFICATION 610
MANUFACTURING PRACTICES—PIPER SPECIFICATION 69

THIS DRAWING IS THE PROPERTY OF THE PIPER AIRCRAFT CORP. AND ITS POSSESSION BY UNAUTHORIZED PERSONS SHALL NOT BE CONSTRUED AS PERMISSION TO REPRODUCE FOR SALE, IN WHOLE OR IN PART, ANY DEVICES SHOWN THEREON

MODEL	PER PLANE	NEXT ASSEMBLY	SUPERSEDES	SUP. BY
PA-11				

LET.	REVISION	DATE	BY
B	66° WAS 74°	9-8-44	K.D.
A	BEAD REMOVED	6-17-47	R.D.R.

PIPER AIRCRAFT CORP.
LOCK HAVEN, PENNA.

TANK ASSEMBLY~
HEADER

DRAFTSMAN	CHECKER	STANDARDS
C.E.V. 6-27-46	6-27-46	

10725

A710

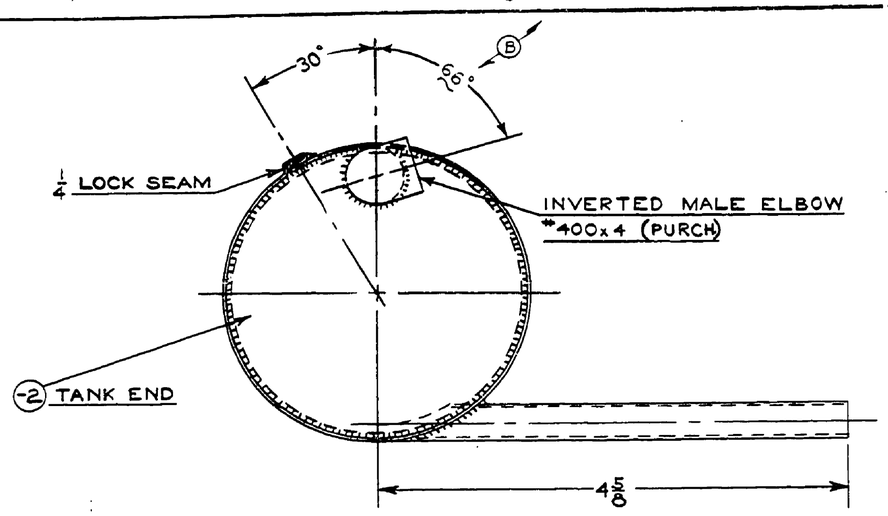

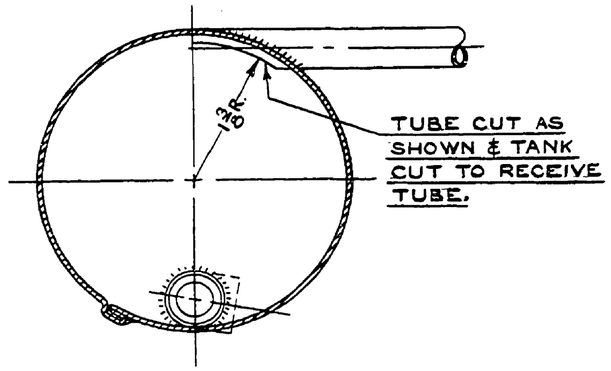

SECTION A-A

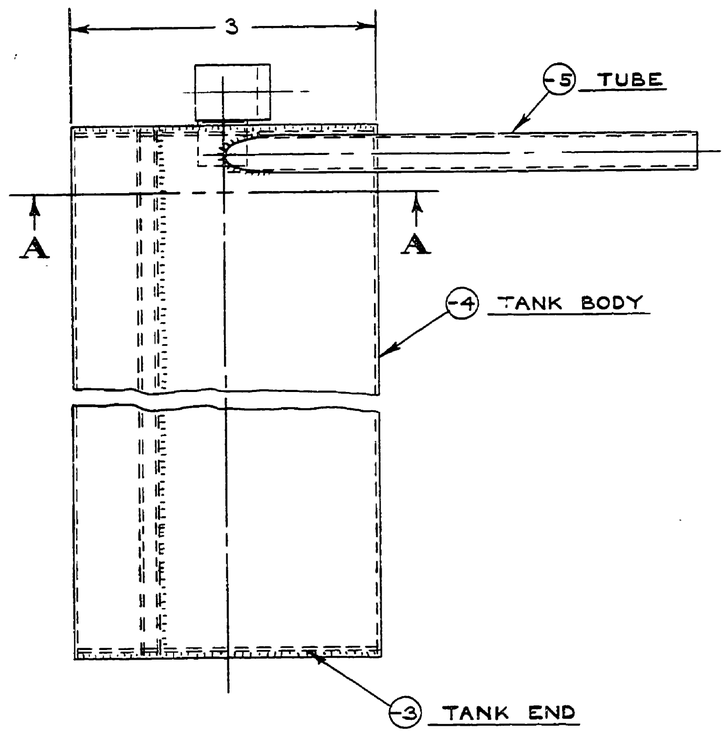

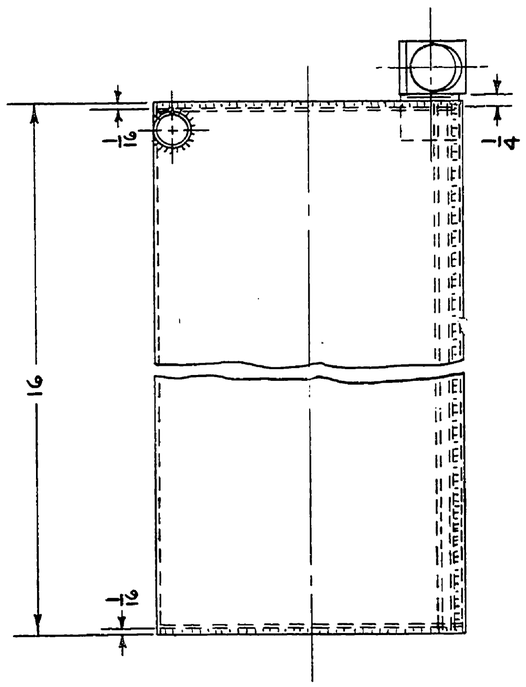

NOTE:
TANK ASSEMBLED WITH SOLDER.

---	1	W/H #400x4	INVERTED MALE ELBOW
-5	1	3/8 x .032 x 4 5/8	COPPER TUBE
-4	1	.012 x 10 3/16 x 16	TYPE 302
-3	1	.012 x 2 15/16 DIA.	ANNEALED, 2D FINISH
-2	1	.012 x 2 15/16 DIA.	ST. STEEL
PART NO.	NO. REQ.	SIZE	DESCRIPTION
		MATERIAL	

SCALE FULL SIZE | TOTAL WT.—LBS.

FINISH—PIPER SPECIFICATION #10

MANUFACTURING PRACTICES—PIPER SPECIFICATION #9

THIS DRAWING IS THE PROPERTY OF THE PIPER AIRCRAFT CORP. AND ITS POSSESSION BY UNAUTHORIZED PERSONS SHALL NOT BE CONSTRUED AS PERMISSION TO REPRODUCE FOR SALE, IN WHOLE OR IN PART, ANY DEVICES SHOWN THEREON

LET.	REVISION	DATE	BY
B	66° WAS 74°	9-8-50	K.D.
A	BEAD REMOVED	6-17-47	R.D.R.

PA-11

MODEL	PER PLANE	NEXT ASSEMBLY	SUPERSEDES	SUP. BY

PIPER AIRCRAFT CORP.
LOCK HAVEN, PENNA.

TANK ASSEMBLY~
HEADER

DRAFTSMAN	CHECKER	STANDARDS
C.E.V. 6-27-46	E.S.T. 6-27-46	

10725

A710

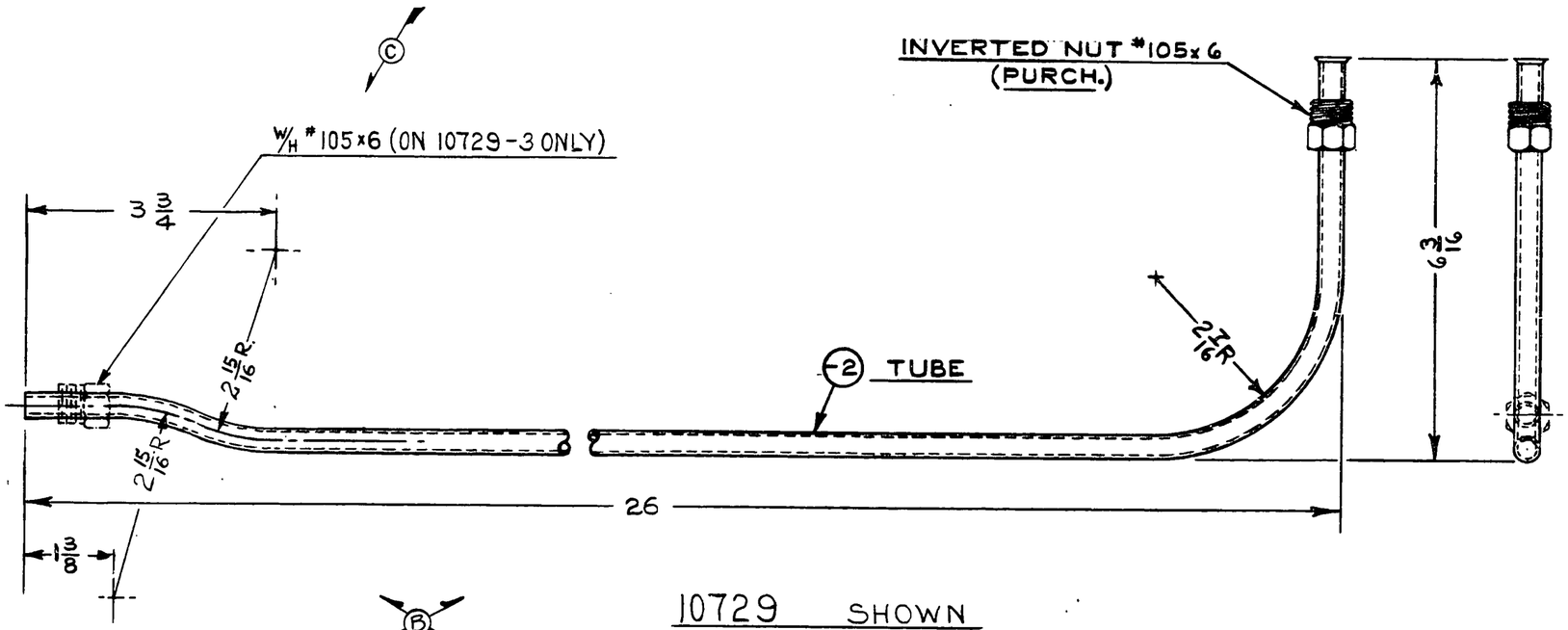

10729 SHOWN

10729-3 WITH ADDITIONAL FTG. SHOWN DOTTED

NOTE:

FOR TUBE END FLARE SEE DWG. 82551.

	1	W/H #105x6 INVERTED NUT (ON 10729-3 ONLY)	
82551	DWG. REF. ONLY	TUBE END FLARE	
	1	INVERTED NUT #105x6	PURCH. WEATHERHEAD CO.
-2	1	3/8 x .032 x 30 3/4	3 S-0 ALUM. TUBE
PART No.	No. REQ.	SIZE	DESCRIPTION
		MATERIAL	

SCALE 6 IN. = 1 FT. TOTAL WT.—LBS.

FINISH—PIPER SPECIFICATION #10

MANUFACTURING PRACTICES—PIPER SPECIFICATION #9

LINE ASSEMBLY~
FUEL

LET.	REVISION	DATE	BY
C	-3 ADDED	2-17-50	HRK
B	26 WAS 25½; END REVISED	4-25-47	C.E.K.
A	3S-0 ALUM. WAS 25-0 FOR -2	10-17-46	C.E.K.

MODEL	PER PLANE	NEXT ASSEMBLY	SUPERSEDES	SUP. BY
PA-11				

PIPER AIRCRAFT CORP.
LOCK HAVEN, PENNA.

C.E.V.	R.E.T.		
6-28-46	6-28-46		10729
DRAFTSMAN	CHECKER	STANDARDS	

THIS DRAWING IS THE PROPERTY OF THE PIPER AIRCRAFT CORP. AND ITS POSSESSION BY UNAUTHORIZED PERSONS SHALL NOT BE CONSTRUED AS PERMISSION TO REPRODUCE FOR SALE, IN WHOLE OR IN PART, ANY DEVICES SHOWN THEREON.

A445

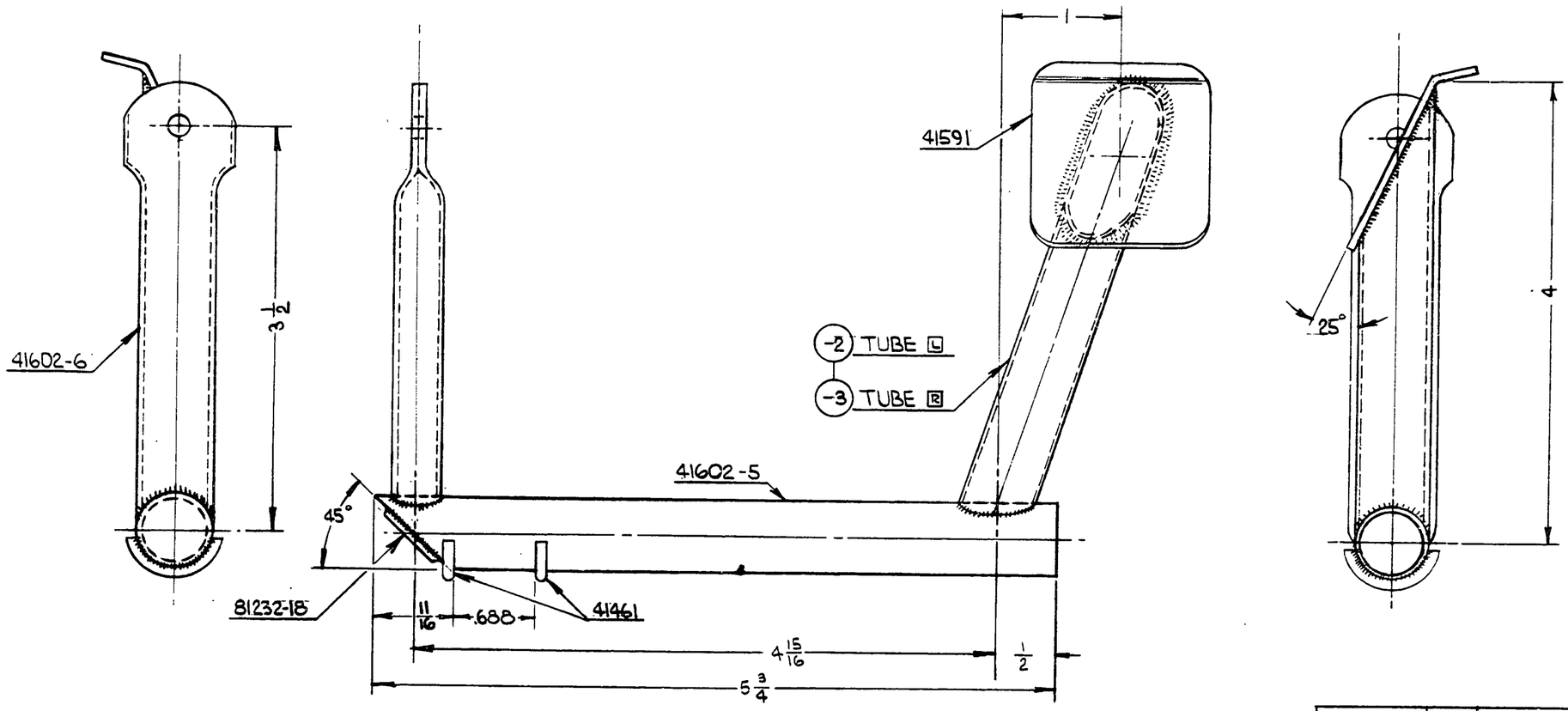

PARTS MARKED L USED ON LEFT ASS'Y. ONLY
PARTS MARKED R USED ON RIGHT ASS'Y. ONLY

10734 SHOWN
10734-1 OPPOSITE

PART No.	No. REQ.	SIZE	DESCRIPTION / MATERIAL
81232-18	1		DISC
41602-6	1		CABLE ARM
41602-5	1		TORQUE TUBE
41591	1		PLATE
41461	2		STOPS
-3	1	5/8 x .049 x 4	#1025 STEEL
-2	1	5/8 x .049 x 4	#1025 STEEL

SCALE FULL SIZE — TOTAL WT.—LBS.
FINISH—PIPER SPECIFICATION #10
MANUFACTURING PRACTICES—PIPER SPECIFICATION #9

PEDAL ASSEMBLY - FRONT BRAKE

DRAFTSMAN	CHECKER	STANDARDS
L.P. 6-25-46	R.E.T. 6-28-46	

10734

THIS DRAWING IS THE PROPERTY OF THE PIPER AIRCRAFT CORP. AND ITS POSSESSION BY UNAUTHORIZED PERSONS SHALL NOT BE CONSTRUED AS PERMISSION TO REPRODUCE FOR SALE, IN WHOLE OR IN PART, ANY DEVICES SHOWN THEREON.

LET.	REVISION	DATE	BY

MODEL	PER PLANE	NEXT ASSEMBLY	SUPERSEDES	SUP. BY
PA-11				

PIPER AIRCRAFT CORP.
LOCK HAVEN, PENNA.

446

A446

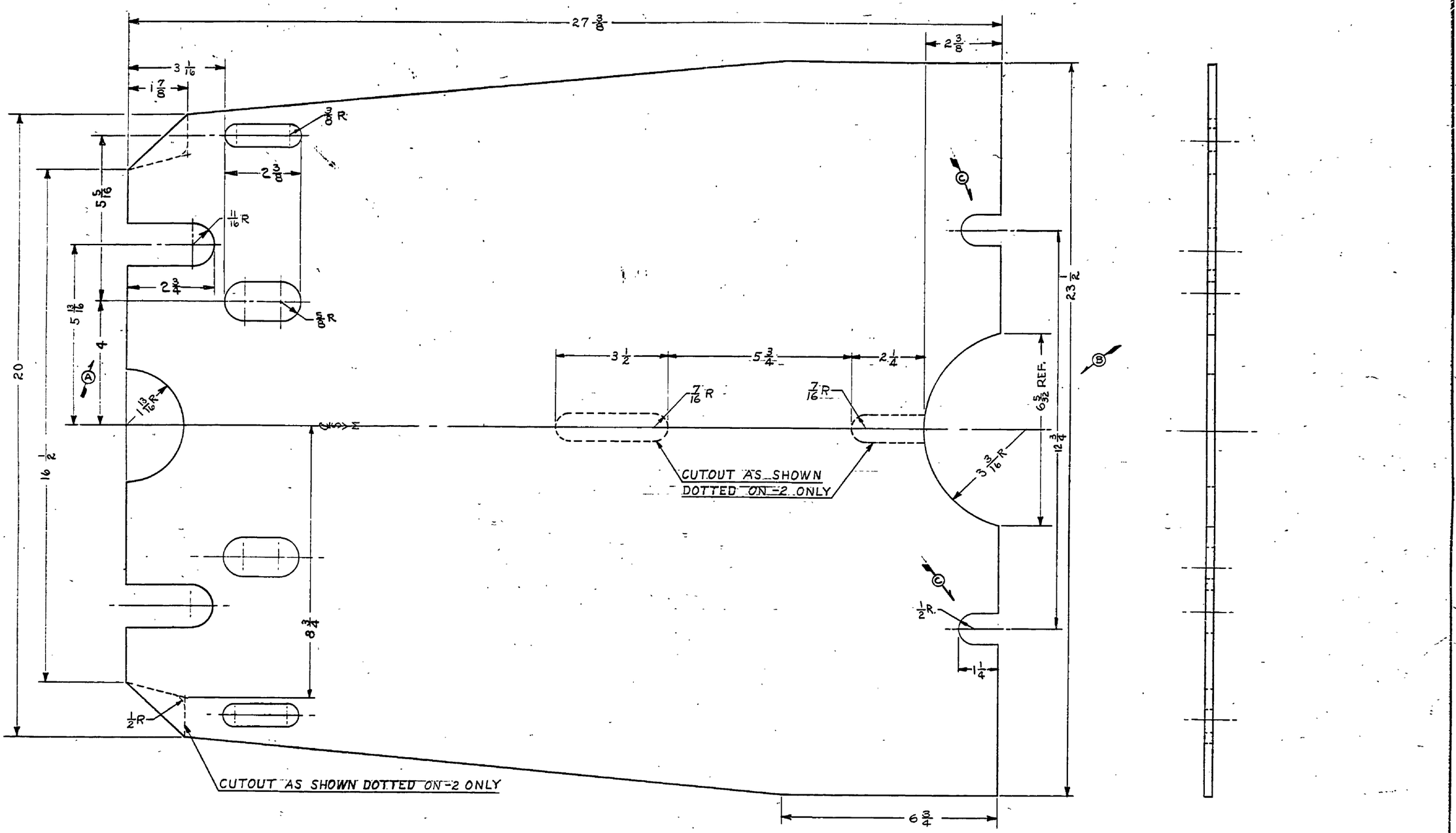

NOTE:
ALL OUTSIDE CORNERS MAY HAVE 7/32 RADII AND INSIDE CORNERS 5/32 RADII, UNLESS OTHERWISE NOTED.

10737 SHOWN
10737-2 WITH CUTOUTS AS SHOWN DOTTED

THIS DRAWING IS THE PROPERTY OF THE PIPER AIRCRAFT CORP. AND ITS POSSESSION BY UNAUTHORIZED PERSONS SHALL NOT BE CONSTRUED AS PERMISSION TO REPRODUCE FOR SALE, IN WHOLE OR IN PART, ANY DEVICES SHOWN THEREON

LET.	REVISION	DATE	BY
F	-2 ADDED	3-2-49	CEK
E	1/8 PLYWOOD WAS 3/16 MASONITE	4-29-47	E.E.R.
D	5/16 MASONITE WAS 1/4 PLYWOOD	12-3-46	HMZ
C	2-1/4 NOTCHES ADDED	11-13-46	L.R.
B	6 5/32 REF. WAS 6 1/8	9-12-46	CEK.
A	4 WAS 4-1/4, 5 5/16 WAS 5 1/4	8-23-46	J.H.

MODEL	PER PLANE	NEXT ASSEMBLY	SUPERSEDES	SUP. BY

PIPER AIRCRAFT CORP.
LOCK HAVEN, PENNA.

PART No.	No. REQ.	SIZE	DESCRIPTION
		1/4 X 23 1/2 X 27 3/8	3 PLY FIR PLYWOOD
		MATERIAL	

SCALE 6 IN. = 1 FT. TOTAL WT.—LBS.
FINISH—PIPER SPECIFICATION 810
MANUFACTURING PRACTICES—PIPER SPECIFICATION 50

FLOORBOARD - FRONT

DRAFTSMAN	CHECKER	STANDARDS
HMZ 6-28-46	E.E.T. 7-1-46	

10737

AZ11

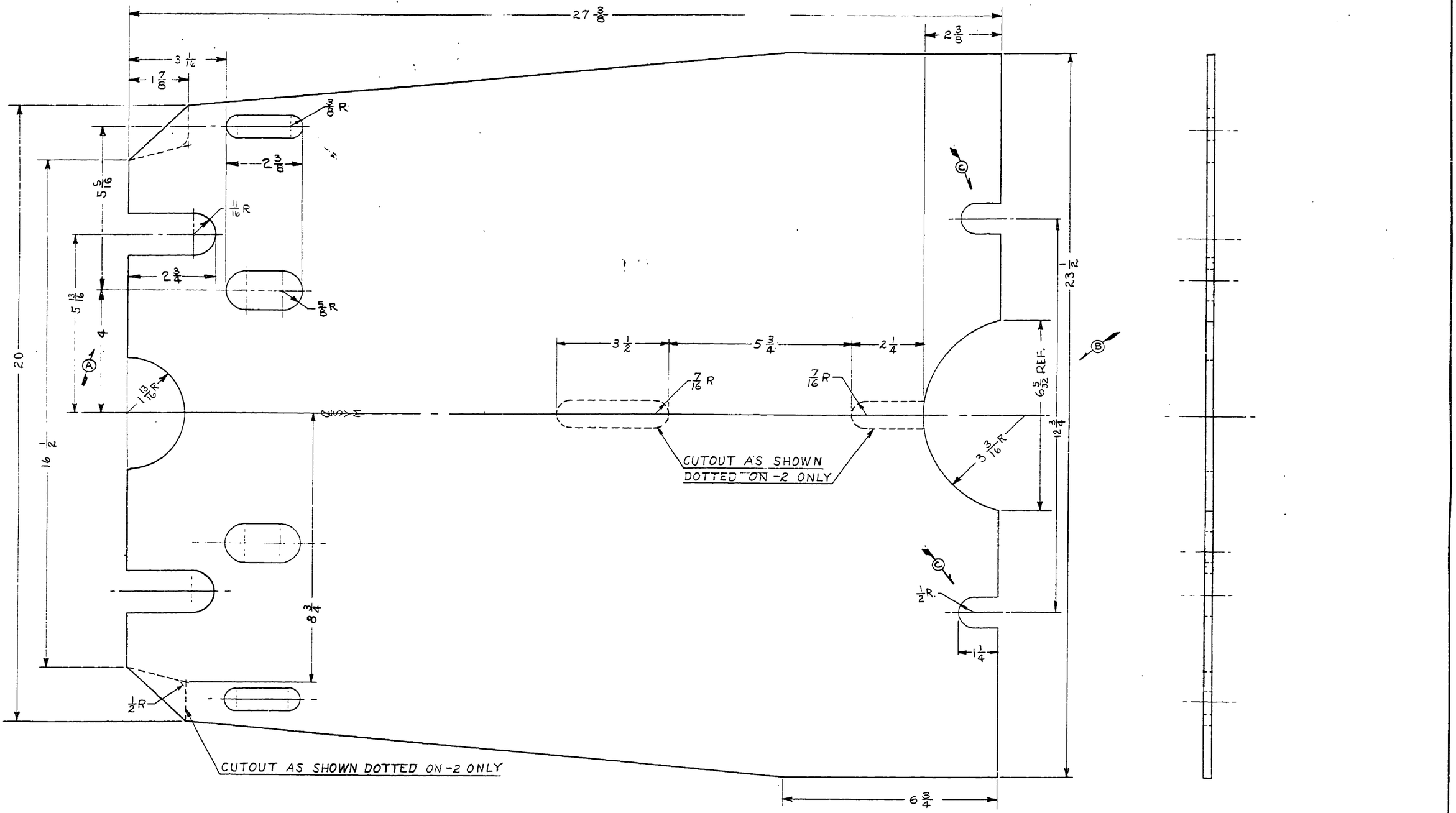

NOTE:
ALL OUTSIDE CORNERS MAY HAVE 7/32 RADII AND INSIDE CORNERS 5/32 RADII, UNLESS OTHERWISE NOTED.

10737 SHOWN
10737-2 WITH CUTOUTS AS SHOWN DOTTED

LET.	REVISION	DATE	BY
F	-2 ADDED	3-2-49	C.E.K.
E	1/8 PLYWOOD WAS 3/16 MASONITE	4-29-47	C.E.K.
D	3/16 MASONITE WAS 1/4 PLYWOOD	12-3-46	H.M.Z.
C	2-1 1/4 NOTCHES ADDED	11-13-46	L.R.
B	6 5/32 REF. WAS 6 1/8	9-12-46	G.E.K.
A	4 WAS 4 1/4, 5 5/16 WAS 5 1/8	8-22-46	J.H.

THIS DRAWING IS THE PROPERTY OF THE PIPER AIRCRAFT CORP. AND ITS POSSESSION BY UNAUTHORIZED PERSONS SHALL NOT BE CONSTRUED AS PERMISSION TO REPRODUCE FOR SALE, IN WHOLE OR IN PART, ANY DEVICES SHOWN THEREON

MODEL	PER PLANE	NEXT ASSEMBLY	SUPERSEDES	SUP. BY

PIPER AIRCRAFT CORP.
LOCK HAVEN, PENNA.

PART NO.	NO. REQ.	1/4 X 23 1/2 X 27 3/8	3 PLY FIR PLYWOOD
		SIZE	DESCRIPTION
		MATERIAL	

SCALE 6 IN. = 1 F T. | TOTAL WT.-LBS.
FINISH—PIPER SPECIFICATION #10
MANUFACTURING PRACTICES—PIPER SPECIFICATION #9

FLOORBOARD - FRONT

DRAFTSMAN	CHECKER	STANDARDS
H.M.Z. 6-28-46	R.E.T. 7-1-46	

10737

A711

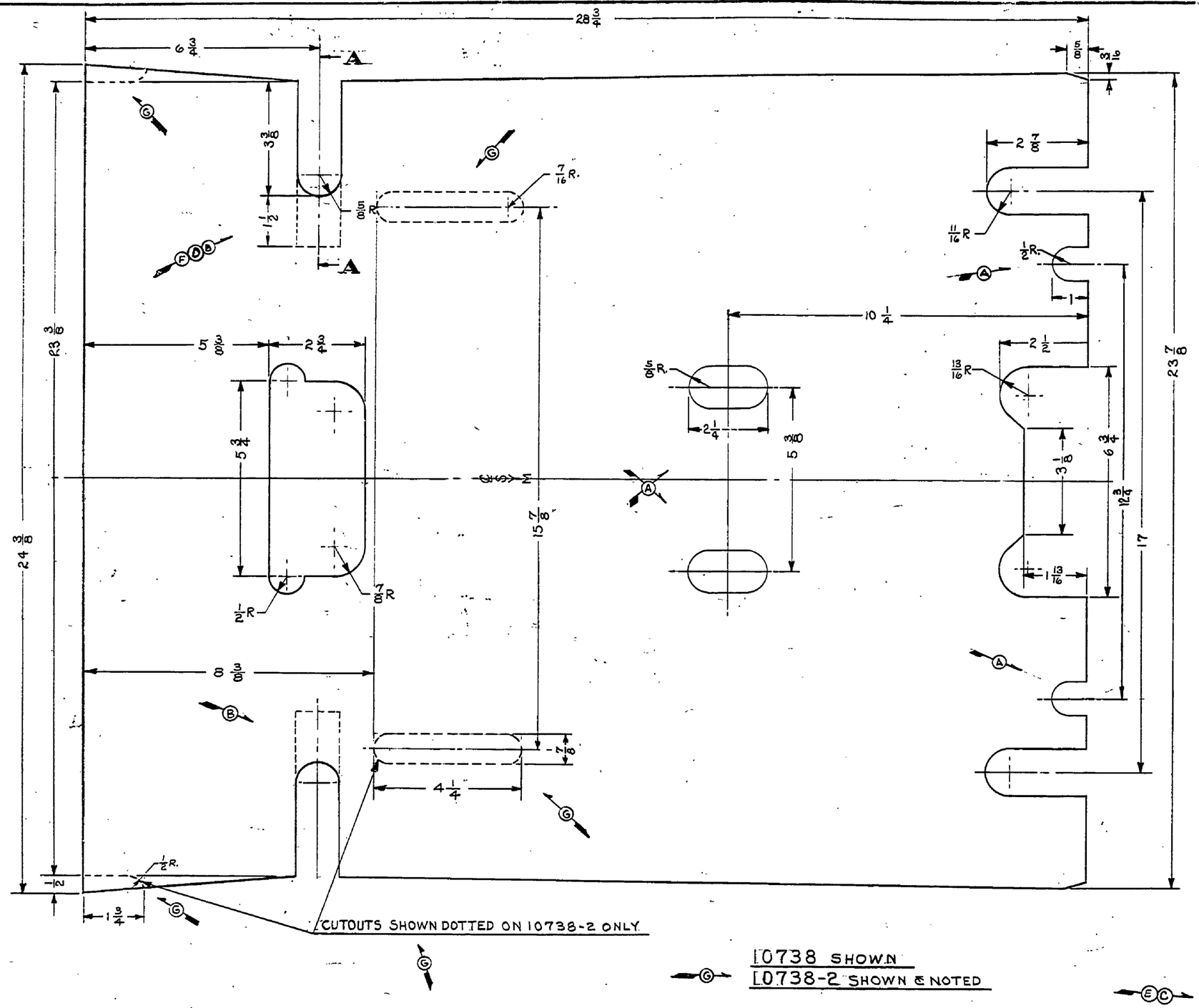

10738 SHOWN
10738-2 SHOWN & NOTED

NOTE:
ALL OUTSIDE CORNERS MAY HAVE 7/32 RADII.

LET.	REVISION	DATE	BY
G	-2, CUTOUTS & NOTE ADDED	3-5-51	LMR
F	1 1/2 WAS 3/4; 1/2 WAS 11/16	4-28-47	C.E.K.
E	1/4 PLYWOOD WAS 1/8 MASONITE	4-29-47	C.E.K.
D	3/4 WAS 1 1/2 & 1/16 WAS 1/8	12-3-46	HMZ
C	1/8 MASONITE WAS 1/4 PLYWOOD	12-5-46	HMZ
B	REVEL & SEC. A-A ADDED	11-13-46	L.R.
A	2-4" NOTCHES ADDED; 2 1/4 SLOT WAS 1 1/8 HOLE	11-15-46	L.R.

THIS DRAWING IS THE PROPERTY OF THE PIPER AIRCRAFT CORP. AND ITS POSSESSION BY UNAUTHORIZED PERSONS SHALL NOT BE CONSTRUED AS PERMISSION TO REPRODUCE FOR SALE, IN WHOLE OR IN PART, ANY DEVICES SHOWN THEREON

MODEL	PER PLANE	NEXT ASSEMBLY	SUPERSEDES	SUP. BY
PA-11				

PIPER AIRCRAFT CORP.
LOCK HAVEN, PENNA.

PART NO.	NO. REQ.	SIZE	DESCRIPTION / MATERIAL
		1/4 X 24 5/8 X 28 3/4	3 PLY FIR PLYWOOD

SCALE 6 IN. = 1 FT. — TOTAL WT.—LBS.
FINISH—PIPER SPECIFICATION #10
MANUFACTURING PRACTICES—PIPER SPECIFICATION #9

FLOOR BOARD-REAR

DRAFTSMAN	CHECKER	STANDARDS
HMZ 6-27-46	E.E.T. 6-27-46	

10738

A712

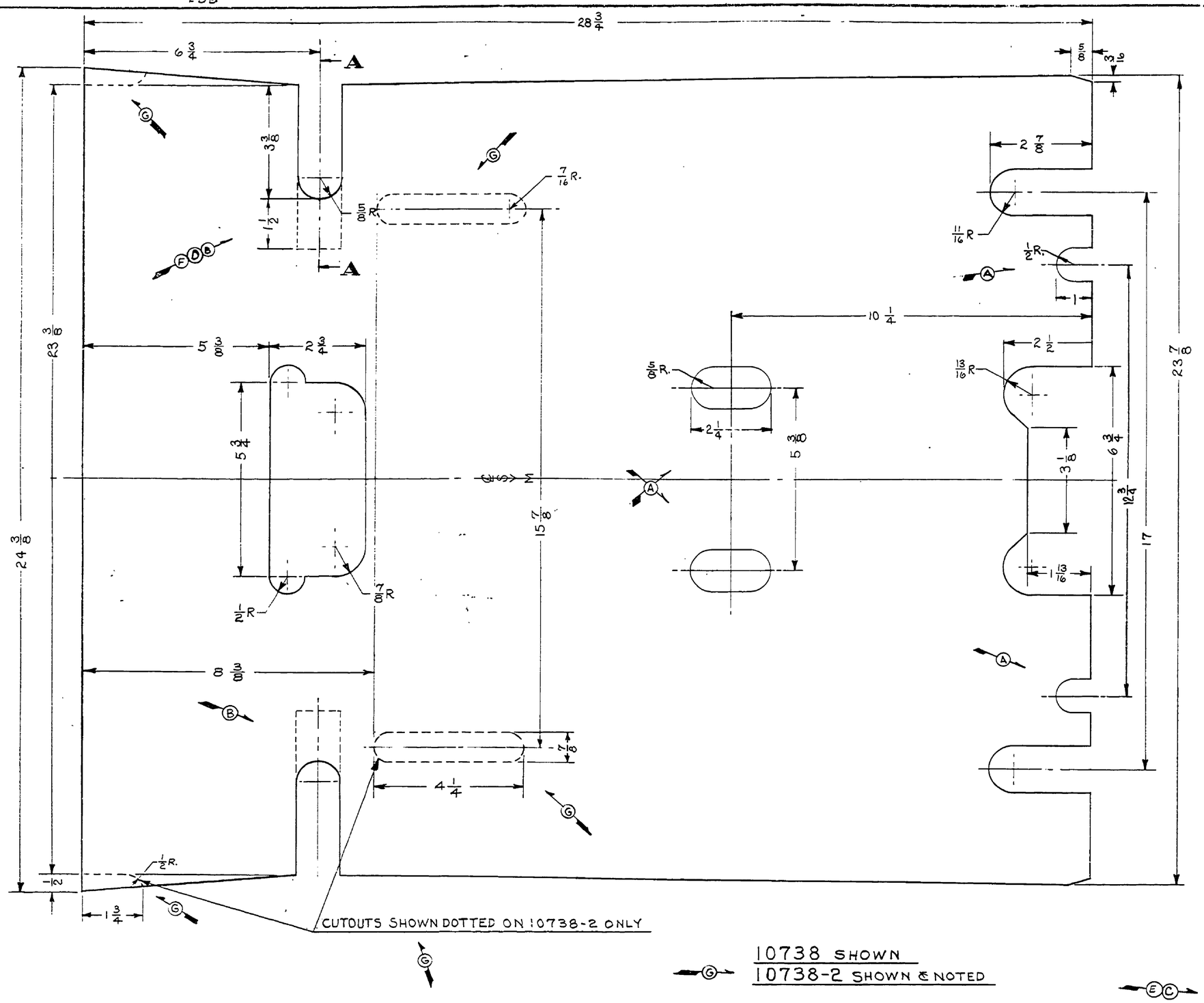

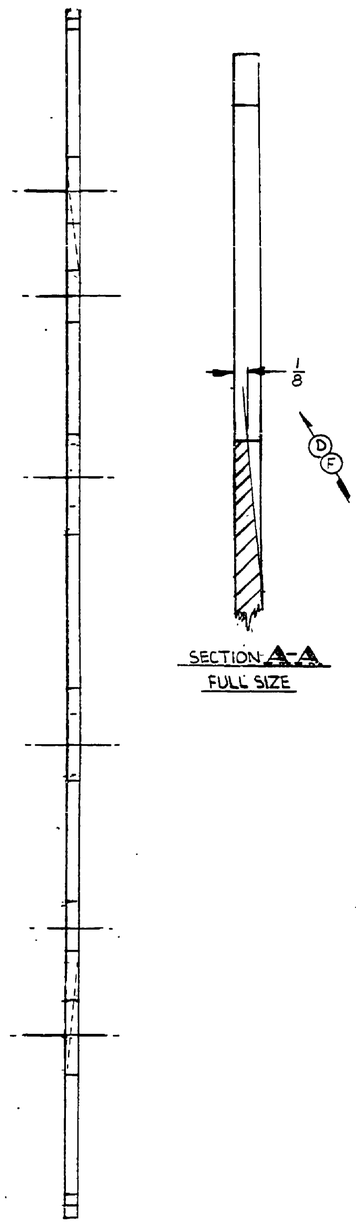

10738 SHOWN
10738-2 SHOWN & NOTED

NOTE:
ALL OUTSIDE CORNERS MAY HAVE 7/32 RADII.

LET.	REVISION	DATE	BY
G	-2, CUTOUTS & NOTE ADDED	3-5-51	LNH
F	1 1/2 WAS 3/4; 1/8 WAS 1/16	4-29-47	C.E.H.
E	1/4 PLYWOOD WAS 1/4 MASONITE	4-29-47	C.E.H.
D	3/4 WAS 1/2 & 1/16 WAS 1/8	12-5-46	H.M.Z.
C	1/8 MASONITE WAS 1/4 PLYWOOD	12-5-46	H.M.Z.
B	BEVEL & SEC. A-A ADDED	11-13-46	L.R.
A	2-4" NOTCHES ADDED; 2 1/4 SLOT WAS 1 5/8 HOLE	11-13-46	L.R.

THIS DRAWING IS THE PROPERTY OF THE PIPER AIRCRAFT CORP. AND ITS POSSESSION BY UNAUTHORIZED PERSONS SHALL NOT BE CONSTRUED AS PERMISSION TO REPRODUCE FOR SALE, IN WHOLE OR IN PART, ANY DEVICES SHOWN THEREON

MODEL	PER PLANE	NEXT ASSEMBLY	SUPERSEDES	SUP. BY
PA-11				

PIPER AIRCRAFT CORP.
LOCK HAVEN, PENNA.

PART NO.	NO. REQ.	MATERIAL
	1/4 X 24 3/8 X 28 3/4	3 PLY FIR PLYWOOD
	SIZE	DESCRIPTION

SCALE 6 IN. = 1 FT. TOTAL WT.—LBS.
FINISH—PIPER SPECIFICATION #10
MANUFACTURING PRACTICES—PIPER SPECIFICATION #9

FLOORBOARD—REAR

DRAFTSMAN	CHECKER	STANDARDS
H.M.Z. 6-27-46	R.E.T. 6-27-46	

10738

A712

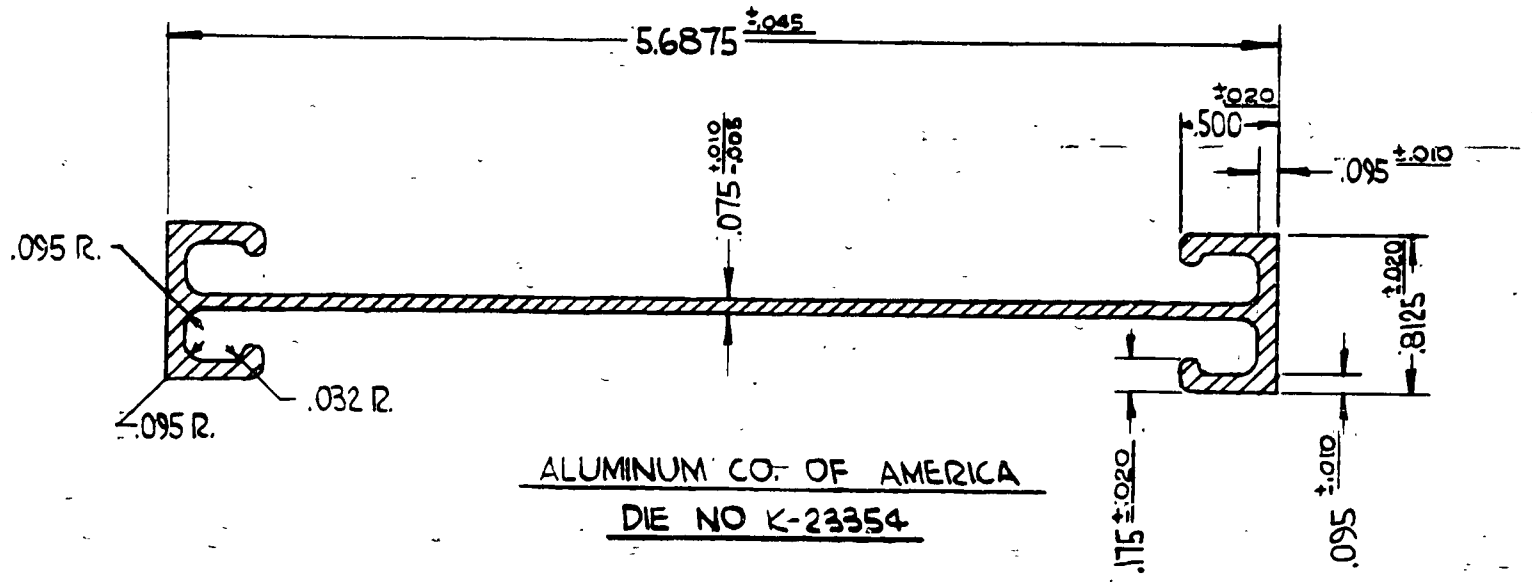

ALUMINUM CO. OF AMERICA
DIE NO K-23354

THIS DRAWING IS THE PROPERTY OF THE PIPER AIRCRAFT CORP. AND ITS POSSESSION BY UNAUTHORIZED PERSONS SHALL NOT BE CONSTRUED AS PERMISSION TO REPRODUCE FOR SALE, IN WHOLE OR IN PART, ANY DEVICES SHOWN THEREON.

LET.	REVISION	DATE	BY

MODEL	PER PLANE	NEXT ASSEMBLY	SUPERSEDES	SUP. BY
J5C		14755		
J3		14383		

PIPER AIRCRAFT CORP.
LOCK HAVEN, PENNA.

PART No.	No. REQ.	MATERIAL
		61S-T ALUM.

SCALE FULL SIZE — TOTAL WT.—LBS.

FINISH—PIPER SPECIFICATION #10

MANUFACTURING PRACTICES—PIPER SPECIFICATION #9

SECTION-FRONT SPAR

DRAFTSMAN	CHECKER	STANDARDS
L.R. 6-25-46	E.E.T. 6-27-46	

10741

PENCILTEX A. & B. SMITH CO., PGH., PA.

31

A31

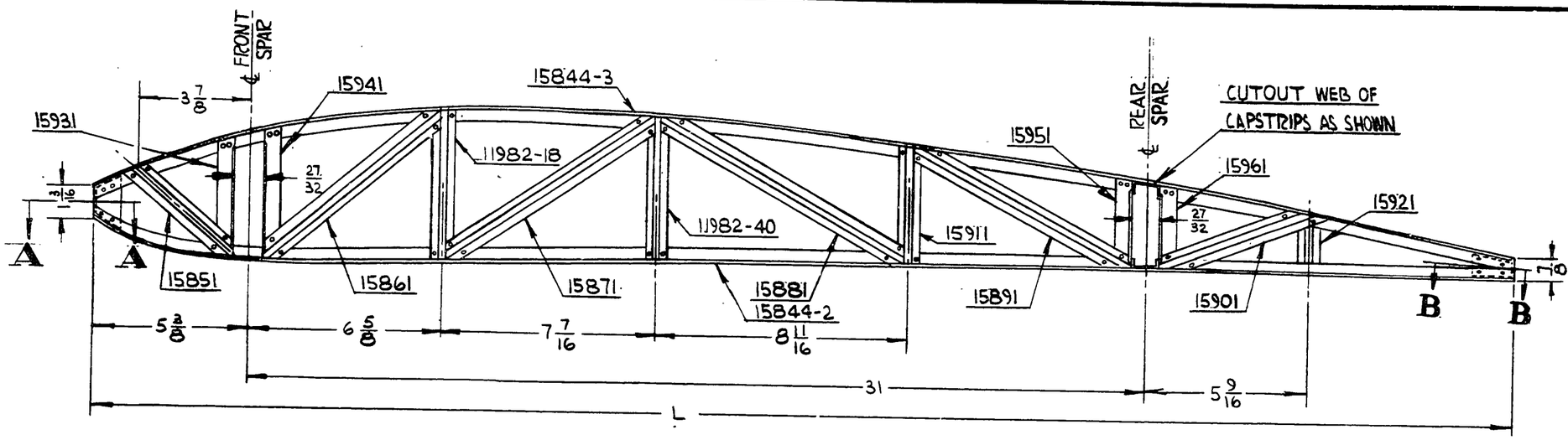

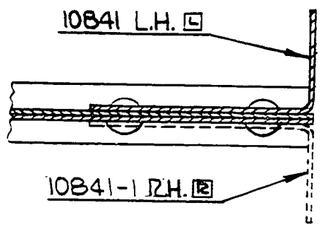

SECTION B-B
FULL SIZE

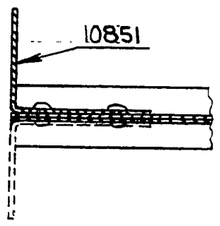

SECTION A-A
FULL SIZE

PART NO.	MODEL	L	PER PLANE	NEXT ASSEMBLY
10742	J56	49 1/8	1	14766
10742-1	J56		1	14766
10742-2	J3	48 1/8	1	15556
10742-3	J3		1	15556

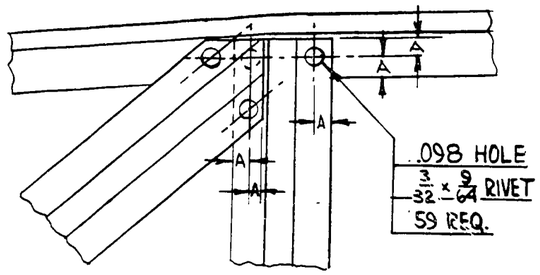

TYPICAL JOINT
FULL SIZE
(A = 1/8 MIN.)

NOTE: PART MARKED [L] USED ON LEFT ASSEMBLY ONLY
PART MARKED [R] USED ON RIGHT ASSEMBLY ONLY

10742
10742-2 } L.H. AS SHOWN (SEE TABLE)

10742-1
10742-3 } R.H. ASSEMBLED OPPOSITELY AS SHOWN DOTTED IN SECTIONS "A-A" & "B-B" (SEE TABLE)

PART NO.	NO. REQ.	SIZE	DESCRIPTION
15844-3	1		CAPSTRIP
15844-2	1		
15961	1		VERTICAL ANGLE BRACE
15951	1		
15941	1		
15931	1		
15921	1		VERTICAL BRACE
15911	1		
15901	1		DIAGONAL BRACE
15891	1		
15881	1		
15871	1		
15861	1		
15851	1		
11982-40	1		VERTICAL BRACE
11982-18	1		
10841-1	1		FITTING
10841			
10851	1		FITTING
	59	3/32 x 9/64 L	ST'L. TUBULAR CD. PLATED RIVETS

MATERIAL
SCALE 3" = 1 FT. & NOTED — TOTAL WT.—LBS.
FINISH—PIPER SPECIFICATION #10
MANUFACTURING PRACTICES—PIPER SPECIFICATION #9

RIB ASSEMBLY — WING TIP

THIS DRAWING IS THE PROPERTY OF THE PIPER AIRCRAFT CORP. AND ITS POSSESSION BY UNAUTHORIZED PERSONS SHALL NOT BE CONSTRUED AS PERMISSION TO REPRODUCE FOR SALE, IN WHOLE OR IN PART, ANY DEVICES SHOWN THEREON

LET.	REVISION	DATE	BY
K	REDRAWN & REVISED	3-7-46	L.R.

MODEL	NOTED PER PLANE	NOTED NEXT ASSEMBLY	SUPERSEDES	SUP. BY

PIPER AIRCRAFT CORP.
LOCK HAVEN, PENNA.

DRAFTSMAN	CHECKER	STANDARDS
L.R. 3-7-46	R.E.T. 3-13-46	

10742

A447

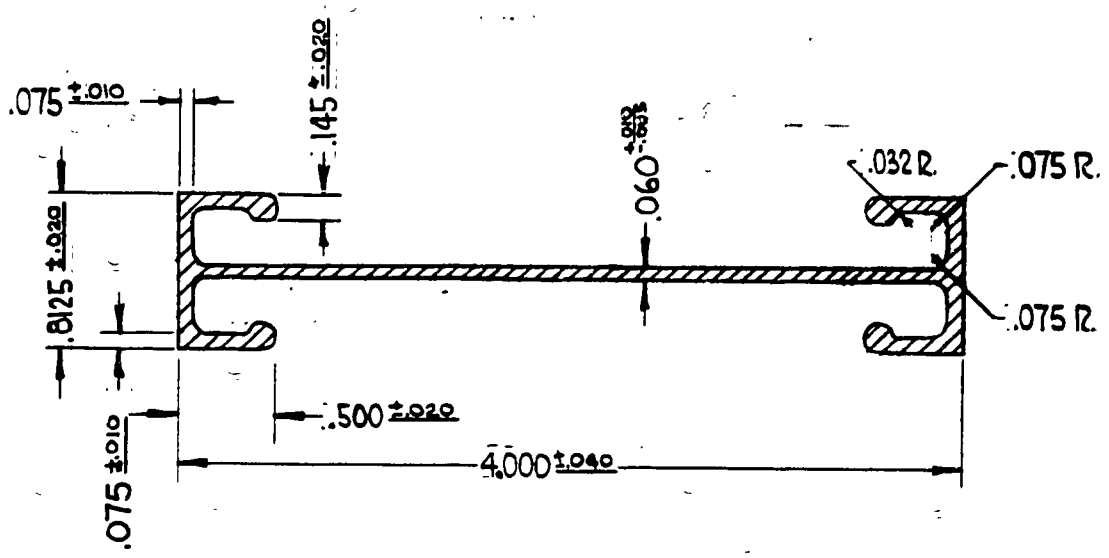

ALUMINUM CO. OF AMERICA
DIE NO. K-23355

THIS DRAWING IS THE PROPERTY OF THE PIPER AIRCRAFT CORP. AND ITS POSSESSION BY UNAUTHORIZED PERSONS SHALL NOT BE CONSTRUED AS PERMISSION TO REPRODUCE FOR SALE, IN WHOLE OR IN PART, ANY DEVICES SHOWN THEREON.

LET.	REVISION	DATE	BY

MODEL	PER PLANE	NEXT ASSEMBLY	SUPERSEDES	SUP. BY
J5C		14823		
J3		14953		

PIPER AIRCRAFT CORP.
LOCK HAVEN, PENNA.

PART No.	No. REQ.	MATERIAL
		61S-T ALUM.

SCALE FULL SIZE | TOTAL WT.—LBS.

FINISH—PIPER SPECIFICATION #10

MANUFACTURING PRACTICES—PIPER SPECIFICATION #9

SECTION - REAR SPAR

L.R.	R.E.T.		
6-27-46	6-27-46		10743
DRAFTSMAN	CHECKER	STANDARDS	

PENCILTEX A. & B. SMITH CO., PGH., PA.

37

A32

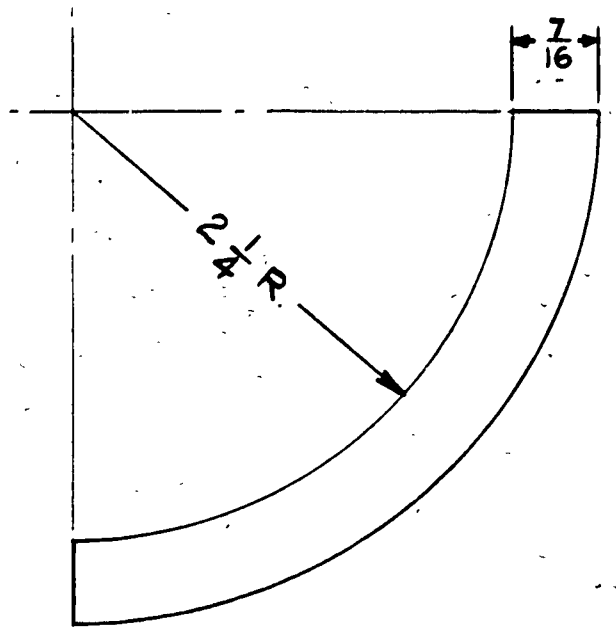



						.050 x 2 11/16 x 2 11/16	PYRALIN
						SIZE	DESCRIPTION
					PART No.	No. REQ.	MATERIAL
					SCALE FULL SIZE		TOTAL WT.—LBS.
					FINISH—PIPER SPECIFICATION #10		
					MANUFACTURING PRACTICES—PIPER SPECIFICATION #9		
					GROMMET		
				PART			
				MODEL	PER PLANE	NEXT ASSEMBLY	SUPERSEDES	SUP. BY
LET.	REVISION	DATE	BY	PIPER AIRCRAFT CORP. LOCK HAVEN, PENNA.	C.E.K. 6-27-46 DRAFTSMAN	R.E.T. 7-1-46 CHECKER	STANDARDS	10748

THIS DRAWING IS THE PROPERTY OF THE PIPER AIRCRAFT CORP. AND ITS POSSESSION BY UNAUTHORIZED PERSONS SHALL NOT BE CONSTRUED AS PERMISSION TO REPRODUCE FOR SALE, IN WHOLE OR IN PART, ANY DEVICES SHOWN THEREON.

PENCILTEX A. & B. SMITH CO., PGH., PA.

A 33

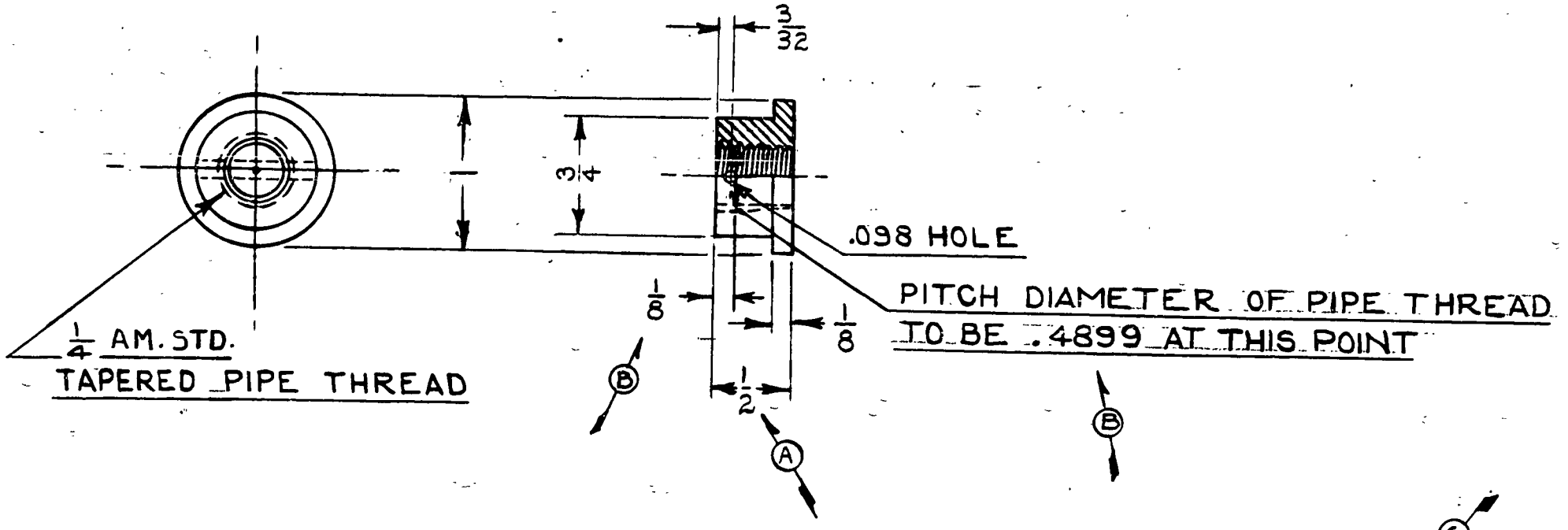

THIS DRAWING IS THE PROPERTY OF THE PIPER AIRCRAFT CORP. AND ITS POSSESSION BY UNAUTHORIZED PERSONS SHALL NOT BE CONSTRUED AS PERMISSION TO REPRODUCE FOR SALE, IN WHOLE OR IN PART, ANY DEVICES SHOWN THEREON.

LET.	REVISION	DATE	BY
C	2S ALUM. WAS 2S-1/2H ALUM.	4-1-47	L.R.
B	NOTE & 1/8 DIM. ADDED	9-24-47	C.L.W.
A	1/2 WAS 5/8	10-31-46	I.D.B.

MODEL	PER PLANE	NEXT ASSEMBLY	SUPERSEDES	SUP. BY
PA-11				

PIPER AIRCRAFT CORP.
LOCK HAVEN, PENNA.

PART No.	No. REQ.	SIZE	DESCRIPTION
		1 IN. DIA. x 1/2 L.	2S ALUM.

MATERIAL

SCALE FULL SIZE — TOTAL WT.—LBS.

FINISH—PIPER SPECIFICATION #10

MANUFACTURING PRACTICES—PIPER SPECIFICATION #9

FITTING-FUEL TANK DRAIN

DRAFTSMAN	CHECKER	STANDARDS
C. L. W. 8-2-46	R. D. M. 8-8-46	

10758

PENCILTEX A. & B. SMITH CO., PGH., PA.

A-34

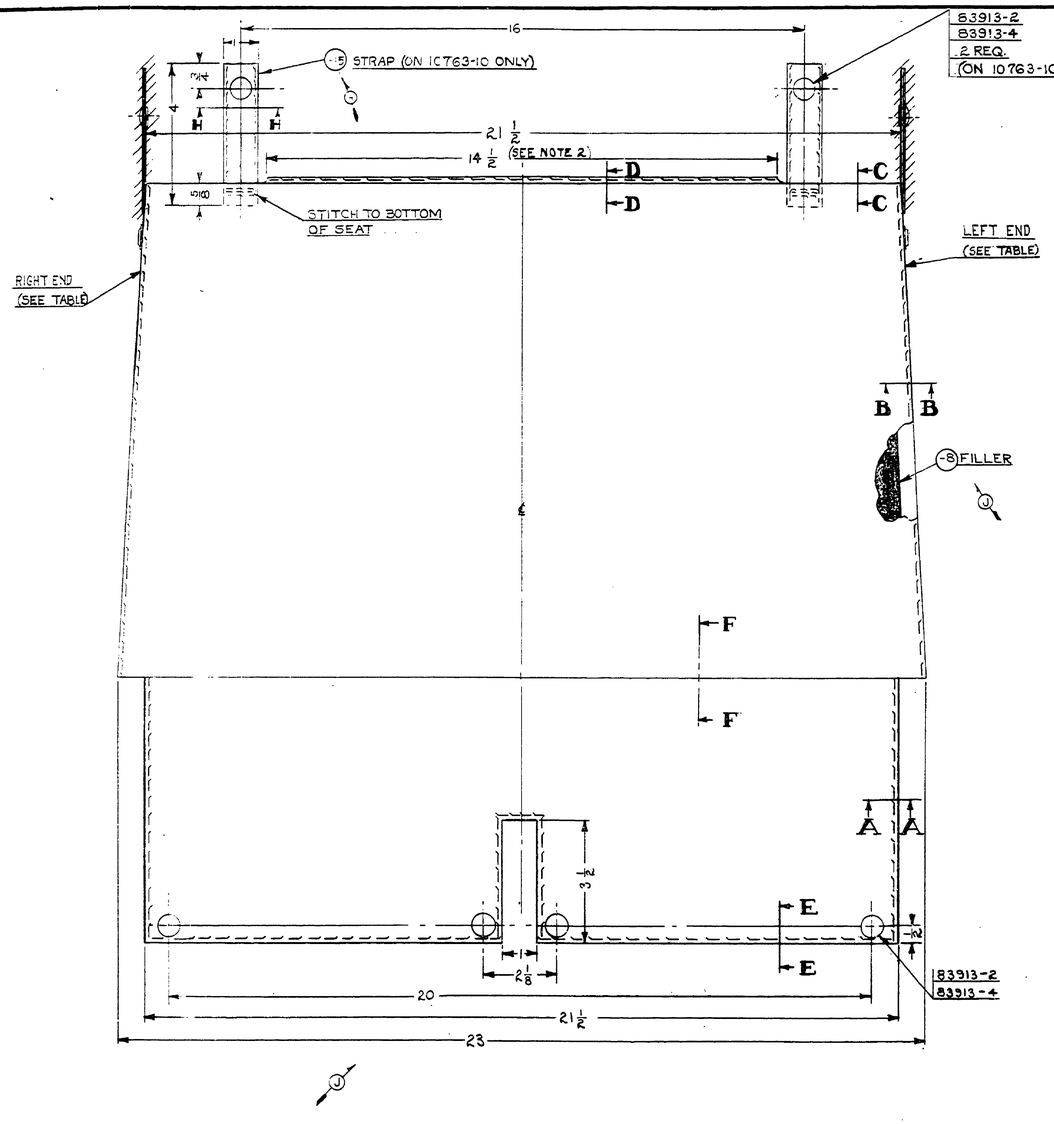

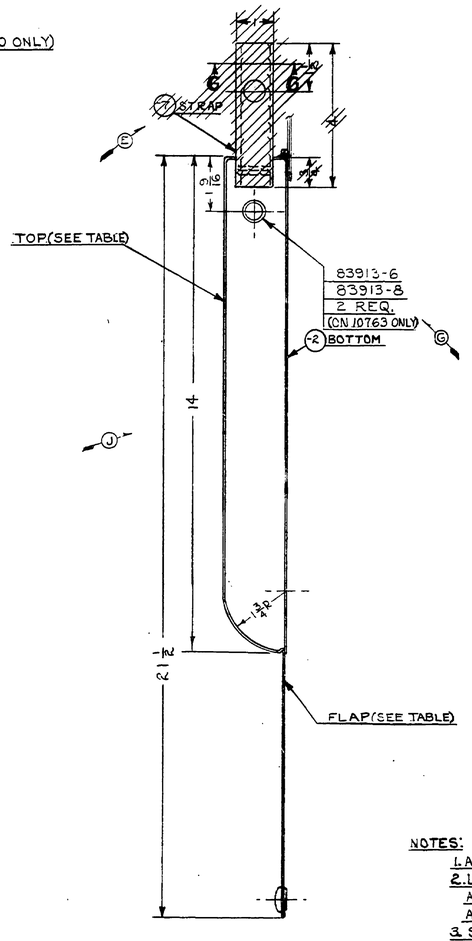

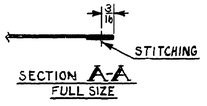

SECTION **A-A**
FULL SIZE

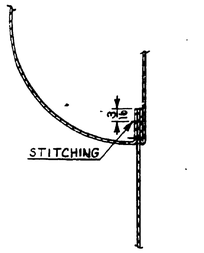

SECTION **F-F**
FULL SIZE

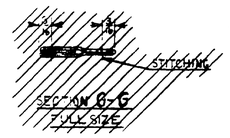

SECTION **G-G**
FULL SIZE

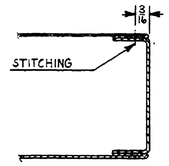

SECTION **B-B**
FULL SIZE



SECTION **C-C**
FULL SIZE

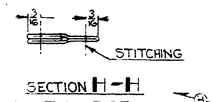

SECTION **H-H**
FULL SIZE

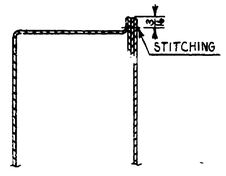

SECTION **D-D**
FULL SIZE

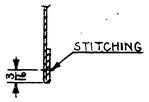

SECTION **E-E**
FULL SIZE

NOTES:
1. ALL OVERLAPS ARE 1/2 IN.
2. LOWER REAR SEAM OF COVER LEFT OPEN 14 1/2 IN. AT CENTER & STITCHED AS SHOWN IN SECTION D-D AFTER FILLER IS INSTALLED.
3. SECTIONS SHOWN WITHOUT FILLER.

ASSY. NO.	TOP	RIGHT END	LEFT END	FLAP	UPHOLSTERY MATERIAL
10763	10763-3	10763-4	10763-5	10763-9	TROJAN 5-HOLE COLOR VC154, GRAIN E31, FINISH CV130 OMEGA TEXTILEATHER, CORR
10763-10	10763-11	10763-12	10763-13	10763-14	2240F-TG-119-RT-54 ANTIQUE TAN VALCANYDE

-15	3	3M	2240F-TG-119-RT-54 ANTIQUE TAN VALCANYDE (ON 10763-10 ONLY)
83913-8	2	EYELET (ON 10763 ONLY)	
83913-6	2	STUD (ON 10763 ONLY)	
	1	18 YDS.	#16-4 MAROON THREAD
83913-4	4	DURABLE DOT SOCKET	ON 10763 ONLY
	2		ON 10763-10 ONLY
83913-2	4	DURABLE DOT BUTTON	ON 10763 ONLY
	6		ON 10763-10 ONLY
FLAP SEE TABLE	1	9½ x 22½	NOTED
-8	2	14 x 23	RUBBERIZED WOOL MED. DENSITY 1 x 36" PURCH.
-7	2	3 1/4	
-6	1	8½ x 22½	
LEFT END SEE TABLE	1	3 X 15	NOTED
RIGHT END SEE TABLE	1	3 X 15	
TOP SEE TABLE	1	19 X 24	
-2	1	15 X 24	8 OZ. CANVAS

PART NO.	NO. REQ.	SIZE	DESCRIPTION MATERIAL
SCALE 6 IN. = 1 FT & NOTED			TOTAL WT. - LBS.

FINISH—PIPER SPECIFICATION #10
MANUFACTURING PRACTICES—PIPER SPECIFICATION #8

CUSHION ASSEMBLY-
REAR SEAT BOTTOM

K	THREAD SPEC. REV.	1-29-51	W.G.		
J	FILLER MATERIAL CHANGED	12-6-48	K.D.		
H	DIM. 20 WAS 19½, DIM. 14 WAS 13	3-18-48	R.M.		
G	83913-6 & 83913-8 ADDED	5-7-47	E.L.N.		
F	2 OF 83913-2 & 83913-4 REM.	5-7-47	E.L.N.		
E	-7 SEC. G-G CANCELED	5-7-47	E.L.N.		
D	MAT'L SPEC. REV. FOR 3-4-5-7-9	4-25-47	L.R.		
C	REDRAWN & REVISED	11-21-46	H.M.Z.		
LET	REVISION	DATE	BY		

THIS DRAWING IS THE PROPERTY OF THE PIPER AIRCRAFT CORP. AND ITS POSSESSION BY UNAUTHORIZED PERSONS SHALL NOT BE CONSTRUED AS PERMISSION TO REPRODUCE FOR SALE, IN WHOLE OR IN PART, ANY DEVICES SHOWN THEREON.

MODEL	PER PLANE	NEXT ASSEMBLY	SUPERSEDES	SUP. BY

PIPER AIRCRAFT CORP.
LOCK HAVEN, PENNA.

DRAFTSMAN	CHECKER	STANDARDS
H.M.Z. 11-21-46	R.D.M. 11-21-46	

10763

A836

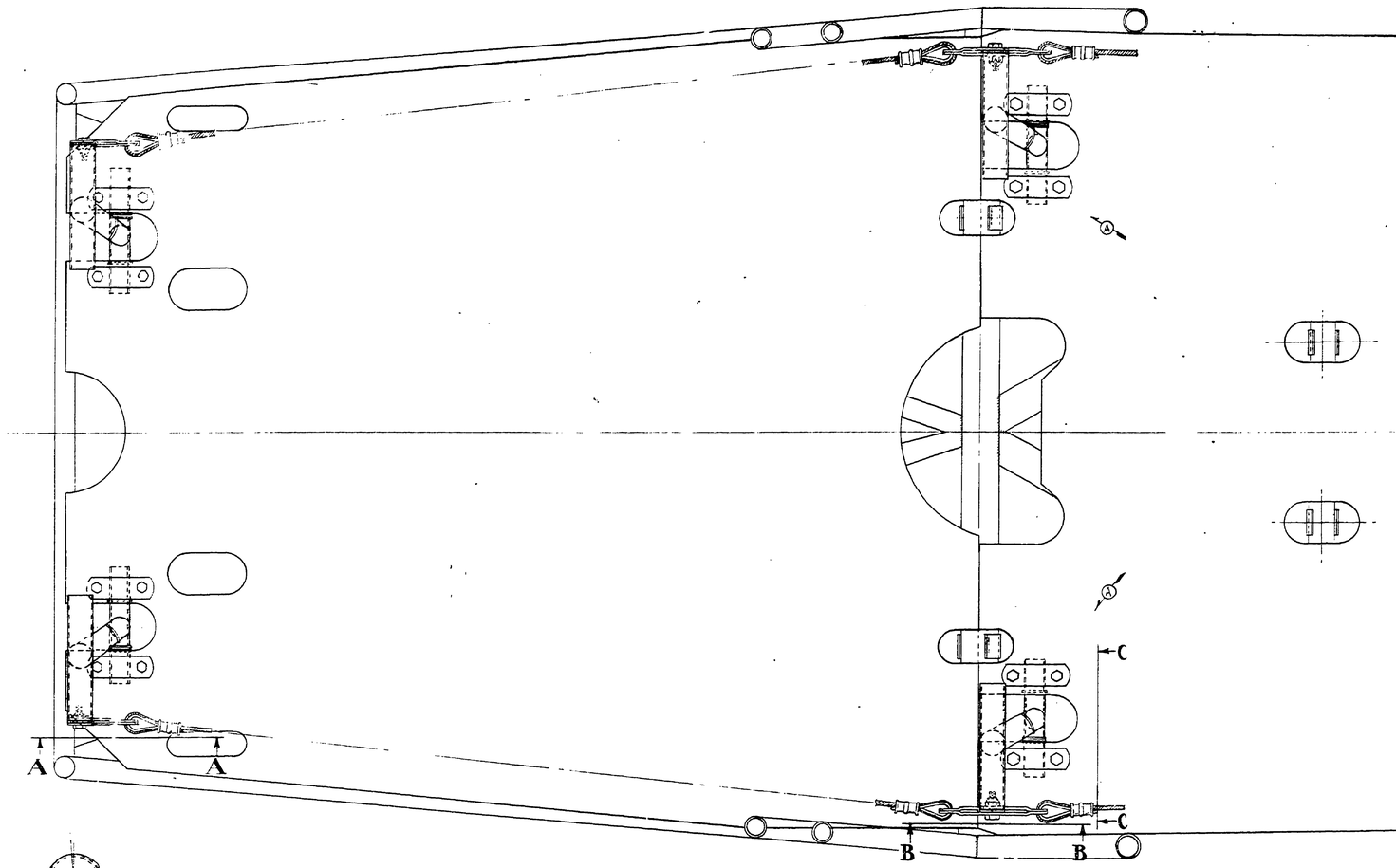

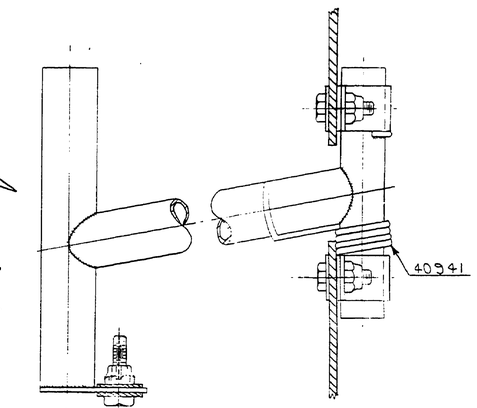

SECTION C-C
FULL SIZE

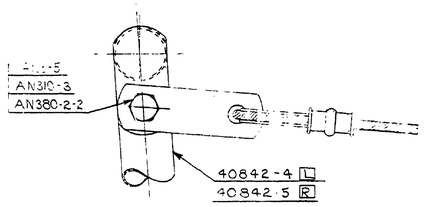

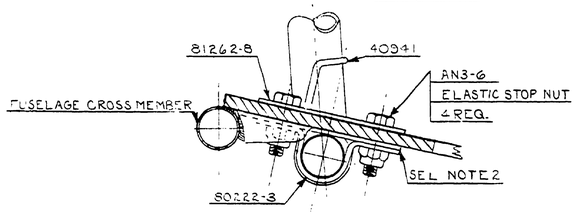

SECTION A-A
FULL SIZE

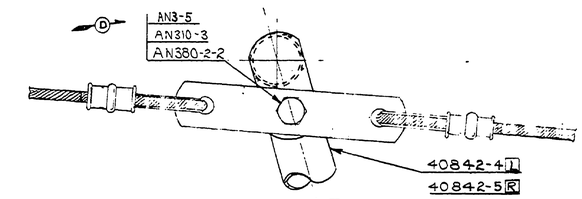

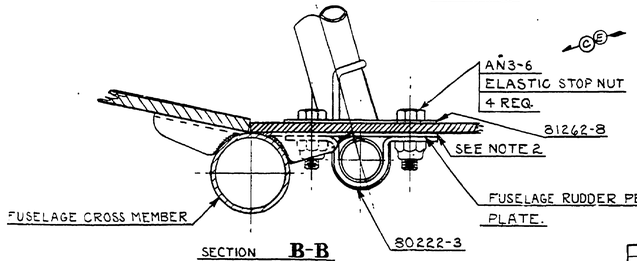

SECTION B-B
FULL SIZE

NOTES:
1. PARTS MARKED L USED ON LEFT INSTALLATION ONLY.
PARTS MARKED R USED ON RIGHT INSTALLATION ONLY.
2. WHERE SEE NOTE 2 IS INDICATED, WASHERS 85012-4, 85012-5 & 85012-6 TO BE PLACED BETWEEN BEARING CLAMP & PLATE TO OBTAIN PROPER FIT.

	16		ELASTIC STOP NUT "22M02
AN380-22	4		COTTER PIN
AN310-3	4		NUT
AN3-6	16		BOLT
AN3-5	4		
85012-6	SEE		WASHER
85012-5	NOTE		
85012-4	2		
81262-8	8		PLATE
80222-3	8		CLAMP
40941	4		SPRING
40842-5	2		PEDAL
40842-4	2		
PART NO.	NO. REQ.		NAME

MATERIAL
SCALE 6 IN. = 1 FT. TOTAL WT. -LBS.
FINISH—PIPER SPECIFICATION #10
MANUFACTURING PRACTICES—PIPER SPECIFICATION #8

PEDALS INSTALLATION-RUDDER

LET.	REVISION	DATE	BY
E	AN3-6 WAS AN3-5	6-29-47	CEK
D	2 OF AN3-5 BOLTS WERE AN3-7	3-31-47	DPZ
C	AN3-5 BOLTS WERE AN3-6	1-25-47	DPZ
B	VIEW REVISED	11-21-46	DC
A	106208 10620-1 REM. 2 OF 812662-8 ADDED.	11-21-46	DC

PIPER AIRCRAFT CORP.
LOCK HAVEN, PENNA.

MODEL	PER PLANE	NEXT ASSEMBLY	SUPERSEDES	SUP. BY

DRAFTSMAN	CHECKER	STANDARDS
HMZ 7-11-46	E.E.T. 9-17-46	

10760

THIS DRAWING IS THE PROPERTY OF THE PIPER AIRCRAFT CORP. AND ITS POSSESSION BY UNAUTHORIZED PERSONS SHALL NOT BE CONSTRUED AS PERMISSION TO REPRODUCE FOR SALE, IN WHOLE OR IN PART. ANY DEVICES SHOWN THEREON.

A837

CUTOUT AS SHOWN DOTTED ON [illegible]-2
SEE FIG. 1

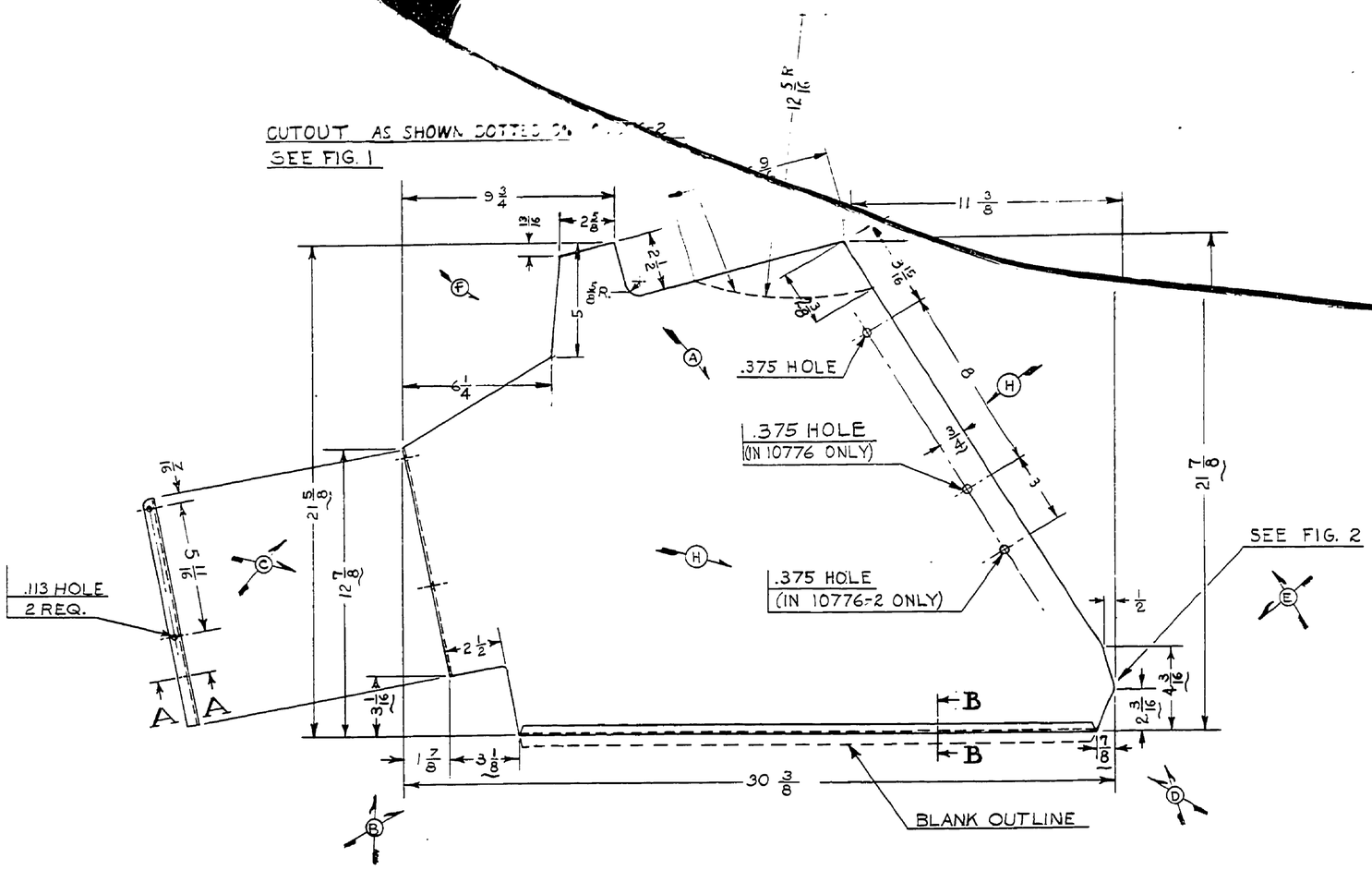

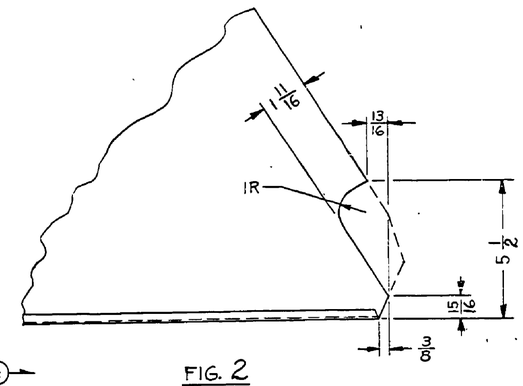

FIG. 2
CUTOUT DETAIL
(ON 10776-2 ONLY)

SECTION B-B
FULL SIZE

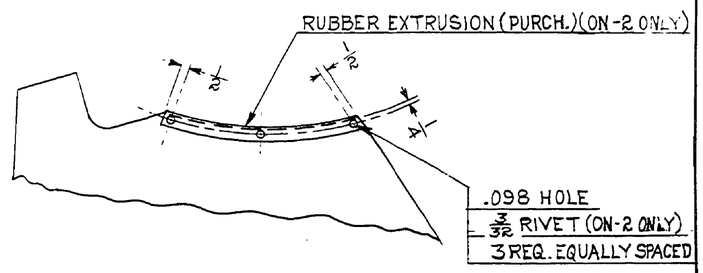

FIG. 1
RUBBER EXTRUSION INST

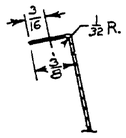

SECTION A-A
FULL SIZE

NOTE :
1. ALL OUTSIDE CORNERS MAY HAVE 7/32 RADII & INSIDE CORNERS 5/32 RADII UNLESS OTHERWISE NOTED.
2. SPRAY NEAR SIDE WITH SOUND DEADENER "A-31 PURCH. NOX-RUST CHEMICAL CORP. (ON 10776-2 ONLY)

10776 SHOWN
10776-2 NOTED

LET.	REVISION	DATE	BY
J	NOTE 2 ADDED	12-11-50	FCS
H	1 OF .375 HOLE RELOCATED; 3/4 WAS 1 1/4; FIG. 2 ADDED	5-17-50	C.K.
G	10776-2 ADDED	3-11-49	C.K.
F	CUTOUT ADDED	6-17-47	RC
E	4 5/16 WAS 3 5/16 & 2 1/8 WAS 2 1/2	2-20-47	BC
D	7/8 WAS 3/4 & 2 5/16 WAS 1 5/16	2-20-47	B.C.
C	12 1/8 WAS 12 1/2 & 2 1/8 WAS 2 1/4	2-20-47	B.C.
B	3 1/8 WAS 3 & 3 1/16 WAS 2 1/16	2-20-47	B.C.
A	.375 HOLES ADDED	1-14-47	C.E.K.

THIS DRAWING IS THE PROPERTY OF THE PIPER AIRCRAFT CORP. AND ITS POSSESSION BY UNAUTHORIZED PERSONS SHALL NOT BE CONSTRUED AS PERMISSION TO REPRODUCE FOR SALE, IN WHOLE OR IN PART, ANY DEVICES SHOWN THEREON

MODEL	PER PLANE	NEXT ASSEMBLY	SUPERSEDES	SUP. BY
RAY				

PIPER AIRCRAFT CORP.
LOCK HAVEN, PENNA.

PART NO.	NO. REQ.	SIZE	DESCRIPTION
	1	8 L	RUBBER EXT. DIE "827 PURCH. B.F. GOODRICH (ON-2 ONLY)
	3	3/32 x 3/16 L.	2S ALUM. BR. HD. RIVET (ON-2 ONLY)
		.020 X 22 1/4 X 30 13/16	3S-1/2 H. ALUM.
		MATERIAL	

SCALE 3 IN. = 1 FT. & NOTED — TOTAL WT.—LBS.
FINISH—PIPER SPECIFICATION #10
MANUFACTURING PRACTICES—PIPER SPECIFICATION #9

PANEL—COCKPIT LEFT FRONT

DRAFTSMAN	CHECKER	STANDARDS
R. D. M. 7-12-46	R. E. T. 7-30-46	

10776

7/3

A713

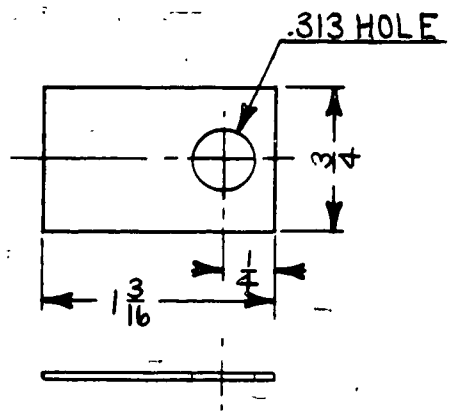

PART No.	No. REQ.	SIZE	DESCRIPTION
		.032 X 3/4 X 1 3/16	#1025 STEEL

MATERIAL

SCALE FULL SIZE | TOTAL WT.—LBS.

FINISH—PIPER SPECIFICATION #10

MANUFACTURING PRACTICES—PIPER SPECIFICATION #9

LUG - COCKPIT
PANEL ATTACHMENT

THIS DRAWING IS THE PROPERTY OF THE PIPER AIRCRAFT CORP. AND ITS POSSESSION BY UNAUTHORIZED PERSONS SHALL NOT BE CONSTRUED AS PERMISSION TO REPRODUCE FOR SALE, IN WHOLE OR IN PART, ANY DEVICES SHOWN THEREON.

MODEL	PER PLANE	NEXT ASSEMBLY	SUPERSEDES	SUP. BY

LET.	REVISION	DATE	BY
A	REDRAWN & REVISED	11-7-46	HMZ

PIPER AIRCRAFT CORP.
LOCK HAVEN, PENNA.

DRAFTSMAN	CHECKER	STANDARDS
HMZ 11-7-46	R.D.M. 11-8-46	

10784

PENCILTEX A. & B. SMITH CO., PGH., PA.

35

A35

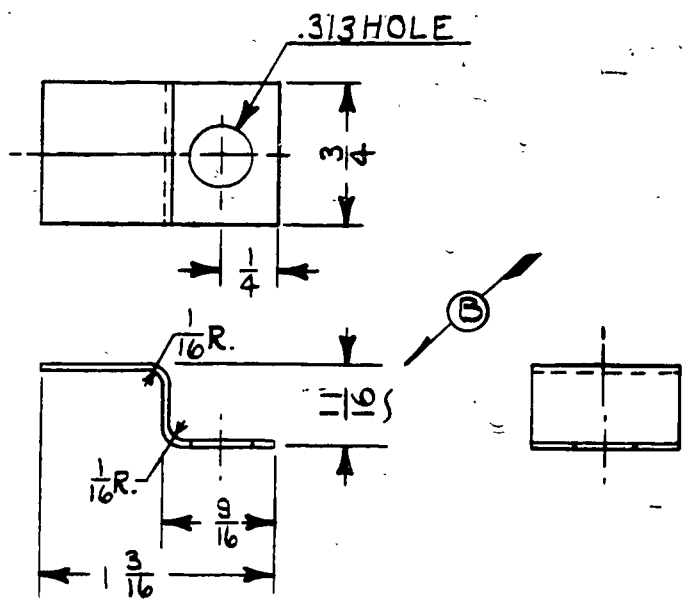

			.032 X 3/4 X 1 7/8	#1025 STEEL
		No. REQ.	SIZE	DESCRIPTION
		PART No.	MATERIAL	
		SCALE FULL SIZE	TOTAL WT.—LBS.	
		FINISH—PIPER SPECIFICATION #10		
		MANUFACTURING PRACTICES—PIPER SPECIFICATION #9		

LUG - COCKPIT
PANEL ATTACHMENT

THIS DRAWING IS THE PROPERTY OF THE PIPER AIRCRAFT CORP. AND ITS POSSESSION BY UNAUTHORIZED PERSONS SHALL NOT BE CONSTRUED AS PERMISSION TO REPRODUCE FOR SALE, IN WHOLE OR IN PART, ANY DEVICES SHOWN THEREON.

MODEL	PER PLANE	NEXT ASSEMBLY	SUPERSEDES	SUP. BY

LET.	REVISION	DATE	BY
B	11/16 WAS 7/16	10-18-50	FCS
A	REDRAWN & REVISED	11-7-46	HMZ

PIPER AIRCRAFT CORP.
LOCK HAVEN, PENNA.

DRAFTSMAN	CHECKER	STANDARDS
HMZ 11-7-46	R.D.M. 11-8-46	

10785

PENCILTEX A. B. SMITH CO., PGH., PA.

A36

.438 HOLE
4 REQ.

.191 HOLE
3 REQ.

EXCEPT AS NOTED

.191 HOLE

1.250 HOLE

1.250 HOLE

.191 HOLE

SECTION A-A
FULL SIZE

.141 HOLE
.191 HOLE
4 REQ.
TO MATCH MATING PART

.191 HOLE

3/32 x 3/64 RIVET
8 REQ.

.191 HOLE
8 REQ

.191 HOLE

.141 HOLE
4 REQ.
TO MATCH
MATING PART

1.000 HOLE

1.875 HOLE

(3) REINFORCEMENT

(2) FIREWALL

11 IN. SQUARES

.129 HOLE
39 REQ.
EQUALLY SPACED EXCEPT AS NOTED

	8	3/32 x 3/64	STEEL TUBULAR CAD PLATED RIVET
-3	4	.0156 x 1½ x 3	TYPE 430 ST STEEL ANNEALED 2D-FIN.
		.018 x 1½ x 3	ALUMINIZED H.R. STEEL
-2	1	.0156 x 26 x 29 15/16	TYPE 430 ST. STEEL ANNEALED 2D FIN. CR.
		.018 x 26 x 29 15/16	ALUMINIZED H.R. STEEL
PART NO.	NO. REQ.	SIZE	DESCRIPTION
			MATERIAL

SCALE 6 IN. = 1 FT. & NOTED | TOTAL WT.—LBS.
FINISH—PIPER SPECIFICATION #10
MANUFACTURING PRACTICES—PIPER SPECIFICATION #9

FIREWALL ASSEMBLY

LET.	REVISION	DATE	BY
L	.141 HOLE RELOCATED	4-15-47	C.E.K.
K	1.250 HOLE WAS .875	1-29-47	C.E.K.
J	.141 HOLE ADDED	1-20-47	H.M.Z.
H	HEATER BOX ASSY. HOLES RELOCATED	1-20-47	H.M.Z.
G	13/4 DIM. REM. -3 REVISED	12-20-46	J.M.M.
F	NOTE REM. & RIVET SPEC. REV.	11-21-46	J.M.M.
E	4-.191 HOLES & LOCATING DIMS. ADDED	11-21-46	J.M.M.
D	.196 HOLE WAS .166	10-18-46	C.E.K.
C	1.250 HOLE WAS .875 HOLE	9-16-46	D.R.B.
B	SIDES & BOTTOM STRAIGHTENED	9-9-46	H.M.Z.
A	ADDED 8-.166 HOLES & LOC. DIM.	8-23-46	J.H.

THIS DRAWING IS THE PROPERTY OF THE PIPER AIRCRAFT CORP. AND ITS POSSESSION BY UNAUTHORIZED PERSONS SHALL NOT BE CONSTRUED AS PERMISSION TO REPRODUCE FOR SALE, IN WHOLE OR IN PART, ANY DEVICES SHOWN THEREON

R.A.N.

MODEL	PER PLANE	NEXT ASSEMBLY	SUPERSEDES	SUP. BY

PIPER AIRCRAFT CORP.
LOCK HAVEN, PENNA.

DRAFTSMAN	CHECKER	STANDARDS
C.E.K. 7-17-46	E.E.T. 7-26-46	

10792

A714

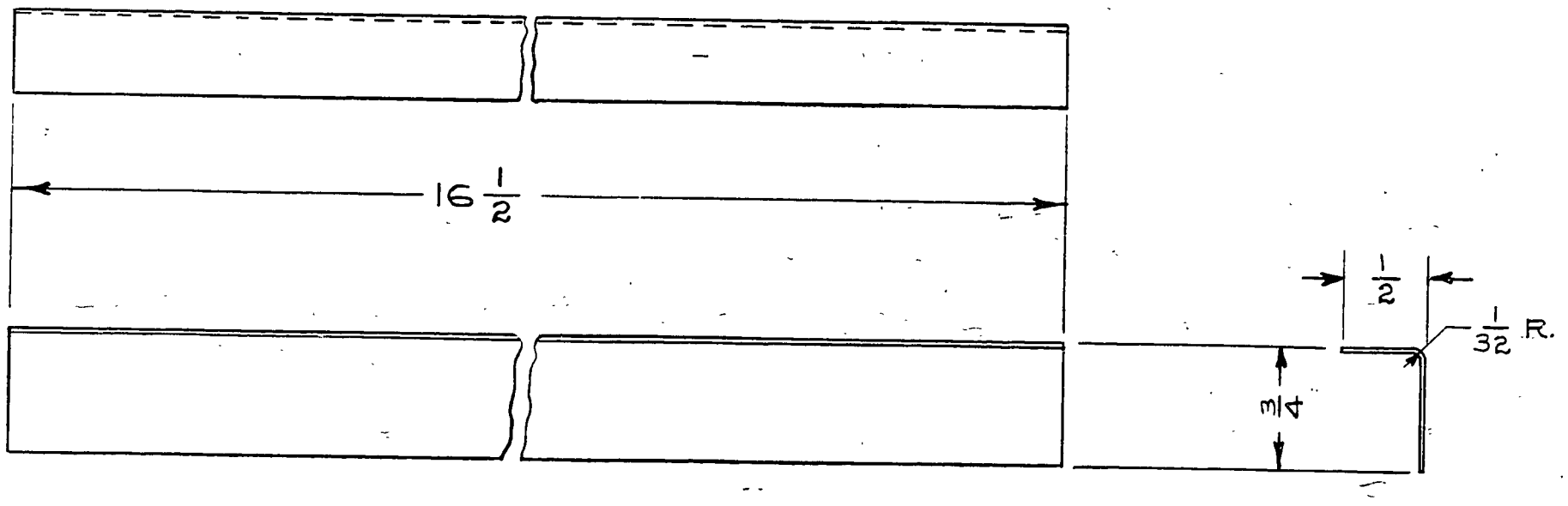

PART No.	No. REQ.	SIZE	DESCRIPTION
		.025 x 1 1/4 x 16 1/2	24 ST ALCLAD ALUM.

MATERIAL

SCALE FULL SIZE | TOTAL WT.—LBS.

FINISH—PIPER SPECIFICATION #10

MANUFACTURING PRACTICES—PIPER SPECIFICATION #9

ANGLE — FUSELAGE COWL REINFORCEMENT

LET.	REVISION	DATE	BY
A	24 S-T ALCLAD ALUM. WAS 24 ST ALUM.	8-23-46	J.H.

THIS DRAWING IS THE PROPERTY OF THE PIPER AIRCRAFT CORP. AND ITS POSSESSION BY UNAUTHORIZED PERSONS SHALL NOT BE CONSTRUED AS PERMISSION TO REPRODUCE FOR SALE, IN WHOLE OR IN PART, ANY DEVICES SHOWN THEREON.

MODEL	PER PLANE	NEXT ASSEMBLY	SUPERSEDES	SUP. BY
PA-11				

PIPER AIRCRAFT CORP.
LOCK HAVEN, PENNA.

DRAFTSMAN	CHECKER	STANDARDS
I.D.B. 7-17-46	R.E.T. 7-18-46	

10795

PENCILTEX A. & B. SMITH CO., PGH., PA.

37

A37

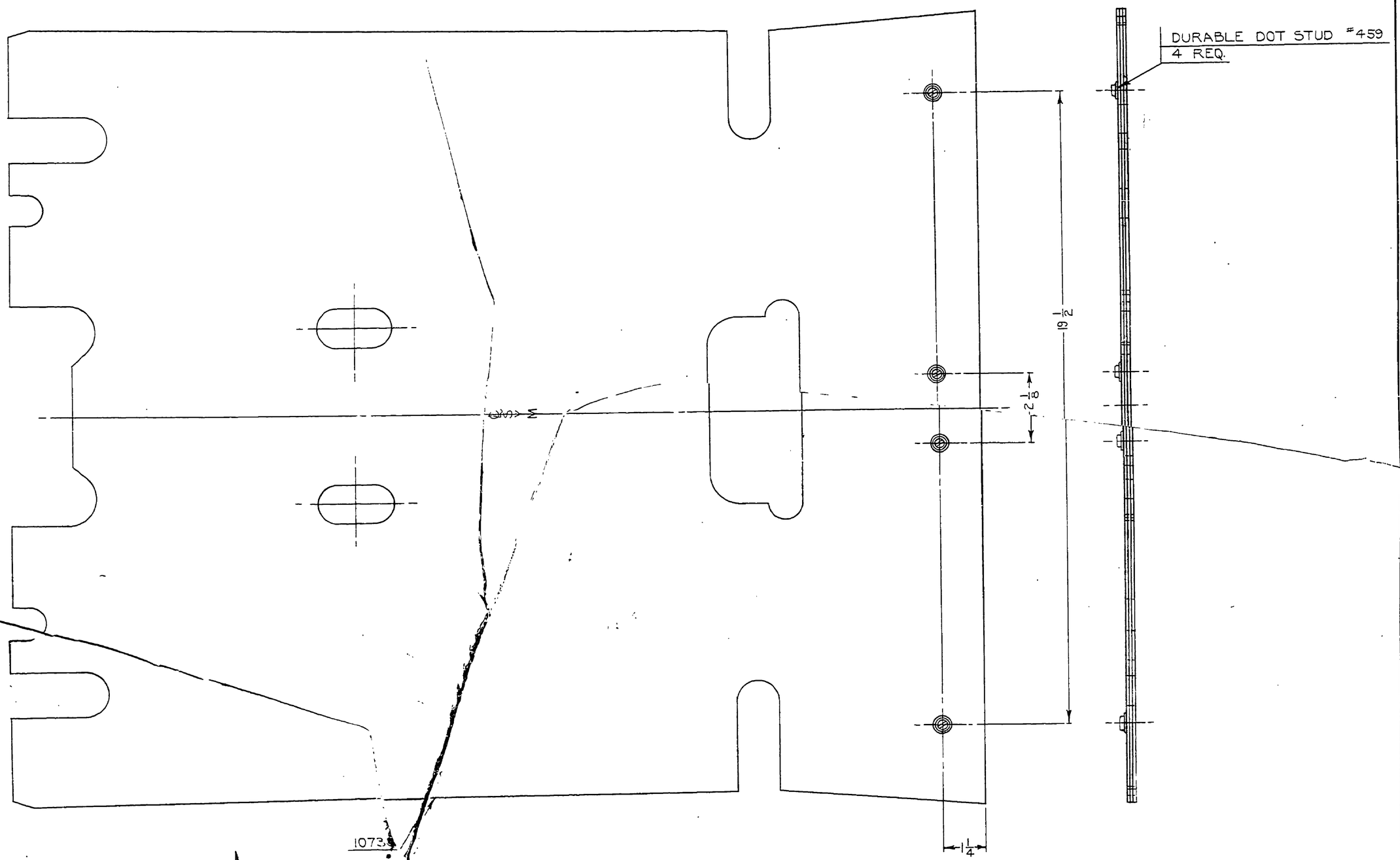

THIS DRAWING IS THE PROPERTY OF THE PIPER AIRCRAFT CORP. AND ITS POSSESSION BY UNAUTHORIZED PERSONS SHALL NOT BE CONSTRUED AS PERMISSION TO REPRODUCE FOR SALE, IN WHOLE OR IN PART, ANY DEVICES SHOWN THEREON

PART NO.	No. REQ.	NAME / MATERIAL
	4	DURABLE DOT STUD #459
10738	1	REAR FLOORBOARD

SCALE 6 IN. = 1 FT. — TOTAL WT.–LBS.

FINISH–PIPER SPECIFICATION #10

MANUFACTURING PRACTICES–PIPER SPECIFICATION #9

FLOORBOARD ASSEMBLY-REAR

LET.	REVISION	DATE	BY
A	VIEW OF 10738 REVISED	11-13-46	L.M.M.

PART MODEL | PER PLANE | NEXT ASSEMBLY | SUPERSEDES | SUP. BY

PIPER AIRCRAFT CORP.
LOCK HAVEN, PENNA.

E.L.N.	E.F.T.		
7-11-46	7-11-46		10799
DRAFTSMAN	CHECKER	STANDARD	

715

A715

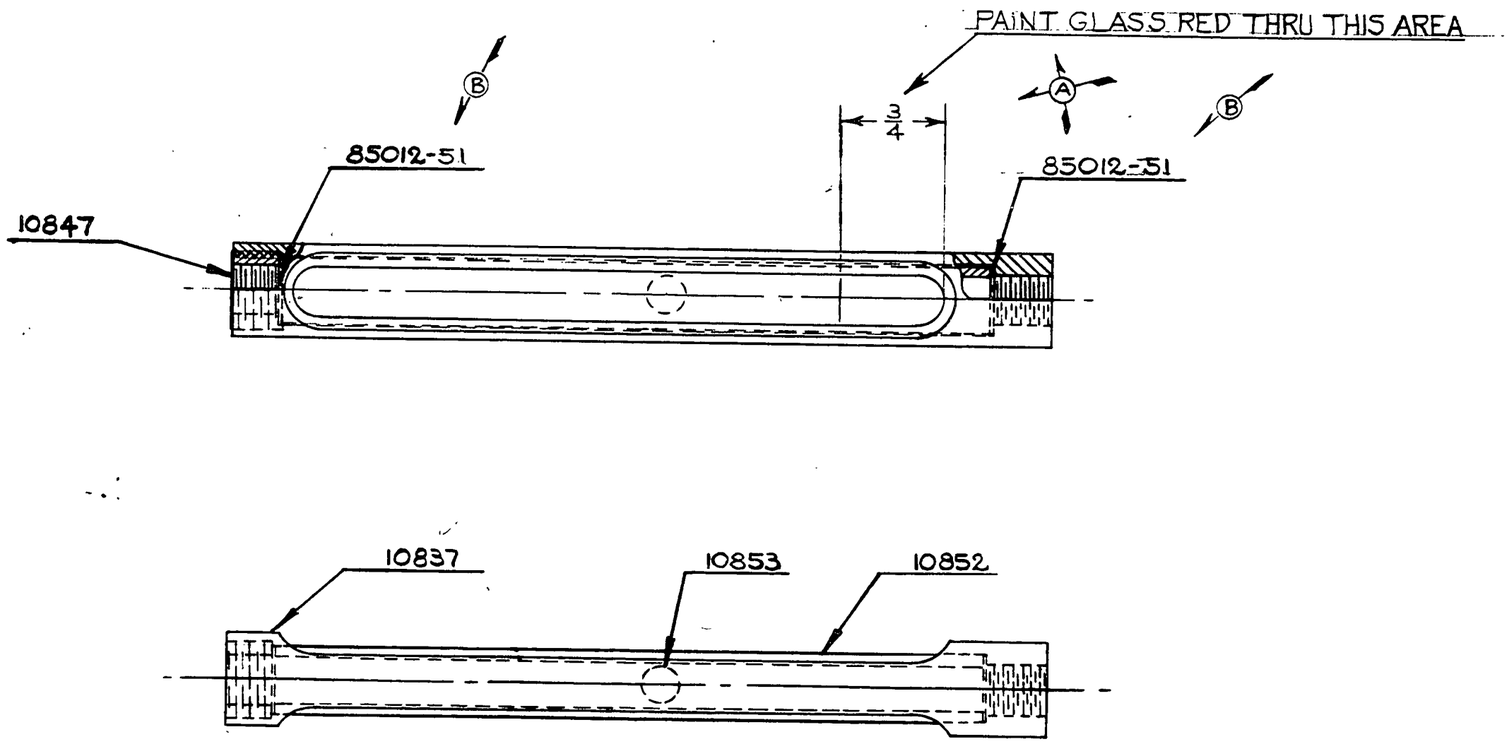

NOTE:
GLASS TUBE IS TO BE FREE FIT INSIDE GAGE.

PART No.	No. REQ.	DESCRIPTION SIZE / MATERIAL
85012-51	2	WASHER
10853	1	FLOAT
10852	1	TUBE
10847	1	BUSHING
10837	1	GAGE

SCALE FULL SIZE | TOTAL WT.–LBS.
FINISH–PIPER SPECIFICATION #10
MANUFACTURING PRACTICES–PIPER SPECIFICATION #9

GAGE ASSEMBLY- FUEL

LET.	REVISION	DATE	BY
B	85012-51 WAS 85012-33	9-14-48	R.M.
A	3/4 DIM + NOTE ADDED	7-29-47	R.M.

Part No.

MODEL	PER PLANE	NEXT ASSEMBLY	SUPERSEDES	SUP. BY

THIS DRAWING IS THE PROPERTY OF THE PIPER AIRCRAFT CORP. AND ITS POSSESSION BY UNAUTHORIZED PERSONS SHALL NOT BE CONSTRUED AS PERMISSION TO REPRODUCE FOR SALE, IN WHOLE OR IN PART. ANY DEVICES SHOWN THEREON.

PIPER AIRCRAFT CORP.
LOCK HAVEN, PENNA.

DRAFTSMAN	CHECKER	STANDARDS
R.J.C. 8-27-46	R.E.T. 8-29-46	

10804

448

A448

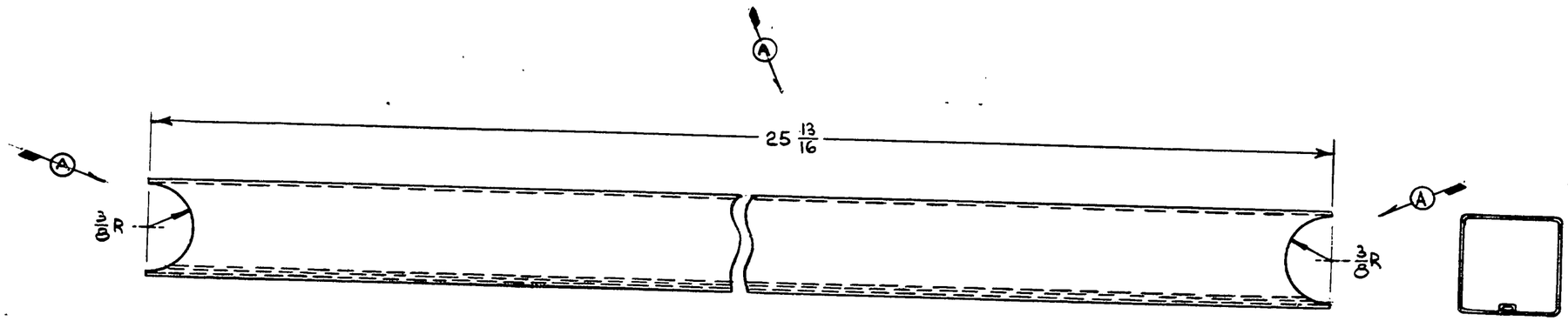

THIS DRAWING IS THE PROPERTY OF THE PIPER AIRCRAFT CORP. AND ITS POSSESSION BY UNAUTHORIZED PERSONS SHALL NOT BE CONSTRUED AS PERMISSION TO REPRODUCE FOR SALE, IN WHOLE OR IN PART, ANY DEVICES SHOWN THEREON.

LET.	REVISION	DATE	BY
A	25 13/16 WAS 26, NOTES REM; ENDS REV.	2-28-47	L.R.

PIPER AIRCRAFT CORP.
LOCK HAVEN, PENNA.

MODEL	PER PLANE	NEXT ASSEMBLY	SUPERSEDES	SUP. BY
PA-11				

PART NO.	NO. REQ.	DESCRIPTION
85551	DWG. REF. ONLY	SQUARE TUBE SECTION
		25 13/16 LONG — PIPER SECTION 85551
		SIZE — MATERIAL

SCALE FULL SIZE — TOTAL WT.—LBS.
FINISH—PIPER SPECIFICATION #10
MANUFACTURING PRACTICES—PIPER SPECIFICATION #9

TUBE - REAR SEAT BACK

DRAFTSMAN	CHECKER	STANDARDS
R.D.M. 7-23-46	E.E.T. 7-23-46	

10818

449

A449

WAS E2-1044, 1118
D1000-A

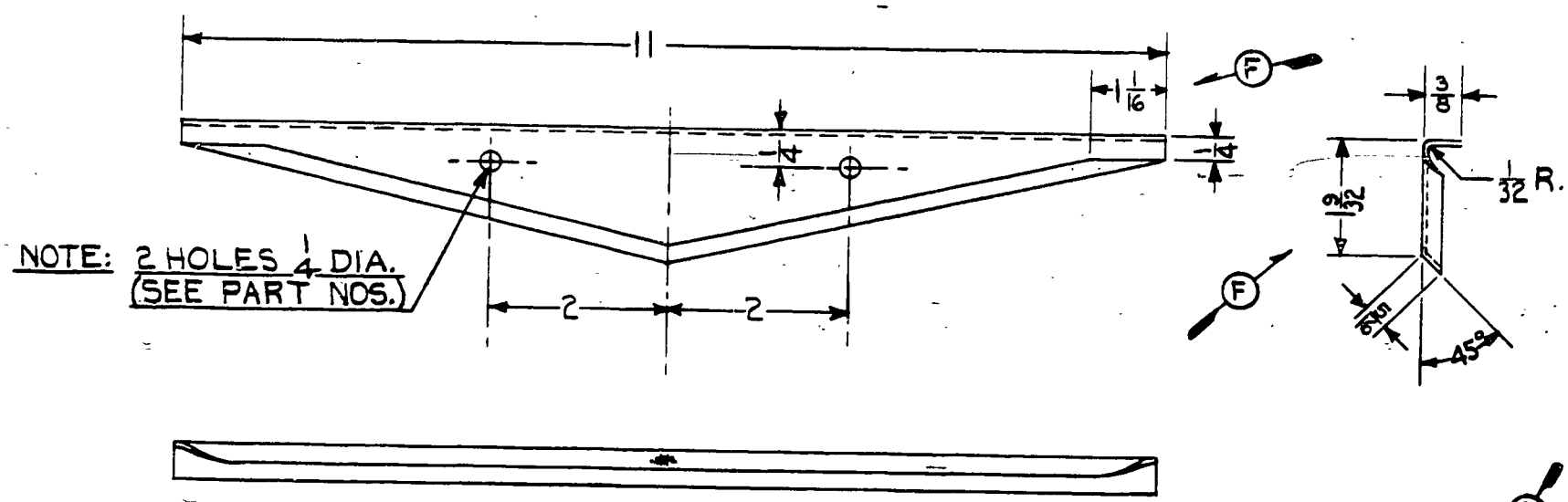

10831-2 WITHOUT HOLES
10831-3 WITH HOLES, AS SHOWN

PART NO.	MODEL	PER SHIP	NEXT ASS'Y.
10831-2	J3, L-4A, L-4B, TG-8	8	12902, 13042
	J5, J5C, J5D, HE-1	8	10692, 10702
	L-14	4	90453, 90458
10831-3	J5, J5C, J5D, HE-1	4	10042, 10108
	L-14	4	90462, 90463

LIMITS, SHOP PRACTICES AND FINISH. UNLESS OTHERWISE NOTED, TO BE IN ACCORDANCE WITH PIPER SPECIFICATIONS #9 AND #10.

LET	REVISION	DATE	BY
L	J5C N.A. 10108 WAS 10652 FOR-3	12-4-45	L.E.K.
K	J5C N.A. 10108 REM. FOR-3	10-31-45	L.E.K.
J	L-14 MODEL REF. ADDED FOR-213	3-19-45	I.M.M.
H	REDRAWN WITHOUT CHANGE	4-11-44	R.D.R.
G	1 5/16 WAS 2 1/16	8-2-43	R.E.T.
F	1/32 R.; 1 9/32; 3/16 & 1 1/16 DIM. ADDED	8-2-43	R.E.T.
E	3/16 & 1 1/2 DIMENSIONS REMOVED	8-2-43	R.E.T.
D	TABLE ADDED	2-19-43	M.G.S.
C	NO. PER SHIP CORRECTED	11-3-42	M.G.S.
B	10831-3 WAS 10831-1	11-7-41	R.R.B.
A	10831-2 WAS 10831	11-7-41	R.R.B.

MODEL	PER SHIP	NEXT ASSEMBLY	SUPERSEDES	SUP. BY
NOTED	NOTED	NOTED		

PIPER AIRCRAFT CORP.
LOCK HAVEN, PENNA.

PART NO.	NO. REQ.	SIZE	MATERIAL
		.020 x 1 15/16 x 11	3S-1/2H ALUM.

SCALE HALF SIZE
FINISH
TOTAL WT.-LBS.

REINFORCEMENT—
RIB CAPSTRIP

DRAWN	CHECKED	APPROVED
R.REEDER 4-11-44	R.E.T. 4-11-44	

10831

K

A-38

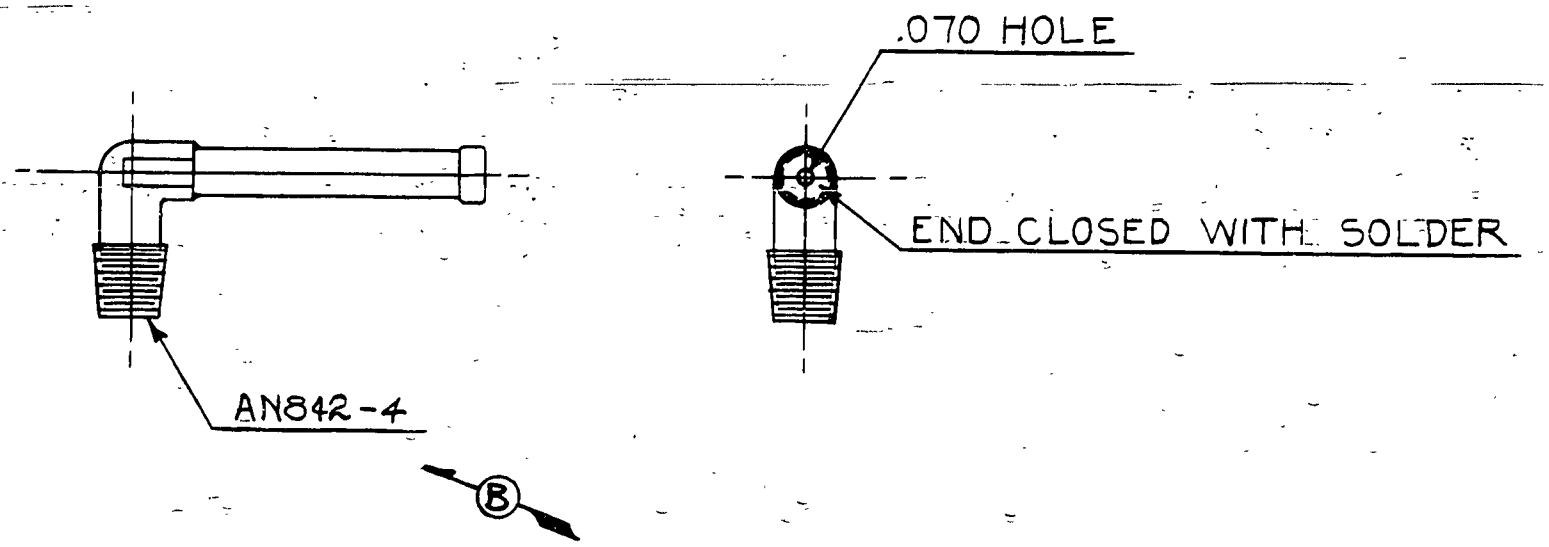

AN842-4	1	ELBOW	
PART No.	No. REQ.	MATERIAL	

SCALE FULL SIZE — TOTAL WT.—LBS.

FINISH—PIPER SPECIFICATION #10

MANUFACTURING PRACTICES—PIPER SPECIFICATION #9

ELBOW

THIS DRAWING IS THE PROPERTY OF THE PIPER AIRCRAFT CORP. AND ITS POSSESSION BY UNAUTHORIZED PERSONS SHALL NOT BE CONSTRUED AS PERMISSION TO REPRODUCE FOR SALE, IN WHOLE OR IN PART, ANY DEVICES SHOWN THEREON.

MODEL	PER PLANE	NEXT ASSEMBLY	SUPERSEDES	SUP. BY

LET.	REVISION	DATE	BY
B	AN842-4 WASPARKER #3142-4LHLC	12-17-46	HM2
A	REDRAWN & REVISED	10-18-46	E.L.N.

PIPER AIRCRAFT CORP.
LOCK HAVEN, PENNA.

E. L. N.	R. D. M.	
10-18-46	10-18-46	
DRAFTSMAN	CHECKER	STANDARDS

10834

PENCILTEX A. G. B. SMITH CO., PGH., PA.

A 39

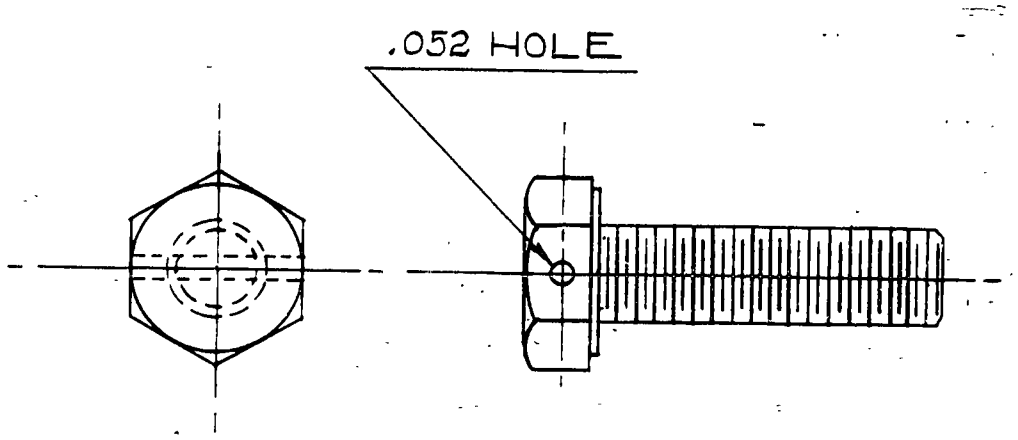

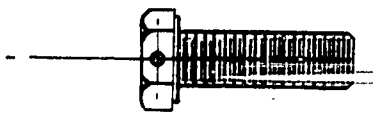

ACTUAL SIZE

NOTE:
THIS PART MADE FROM STD. 1/4 IN. STEEL CADMIUM PLATED HEX. HEAD CAP SCREW 1/4 -20 NC-3 (SEE TABLE)

PART NO.	SCREW SIZE
10836	1/4 x 7/8 LONG
10836-2	1/4 x 1/2 LONG

LET.	REVISION	DATE	BY
B	-2 ADDED	11-11-47	RC
A	7/8 LONG WAS 1	11-29-46	E.L.N.

THIS DRAWING IS THE PROPERTY OF THE PIPER AIRCRAFT CORP. AND ITS POSSESSION BY UNAUTHORIZED PERSONS SHALL NOT BE CONSTRUED AS PERMISSION TO REPRODUCE FOR SALE, IN WHOLE OR IN PART, ANY DEVICES SHOWN THEREON.

MODEL	PER PLANE	NEXT ASSEMBLY	SUPERSEDES	SUP. BY
J5C	4	75266		

PIPER AIRCRAFT CORP.
LOCK HAVEN, PENNA.

PART No.	No. REQ.	
		NOTED

MATERIAL

SCALE TWICE SIZE — TOTAL WT.—LBS.

FINISH—PIPER SPECIFICATION #10

MANUFACTURING PRACTICES—PIPER SPECIFICATION #9

SCREW—DRILLED HEAD CAP

I.D.B.	E.E.T.	
8-29-46	8-29-46	
DRAFTSMAN	CHECKER	STANDARDS

10836

PENCILTEX A. & B. SMITH CO., PGH., PA.

A40

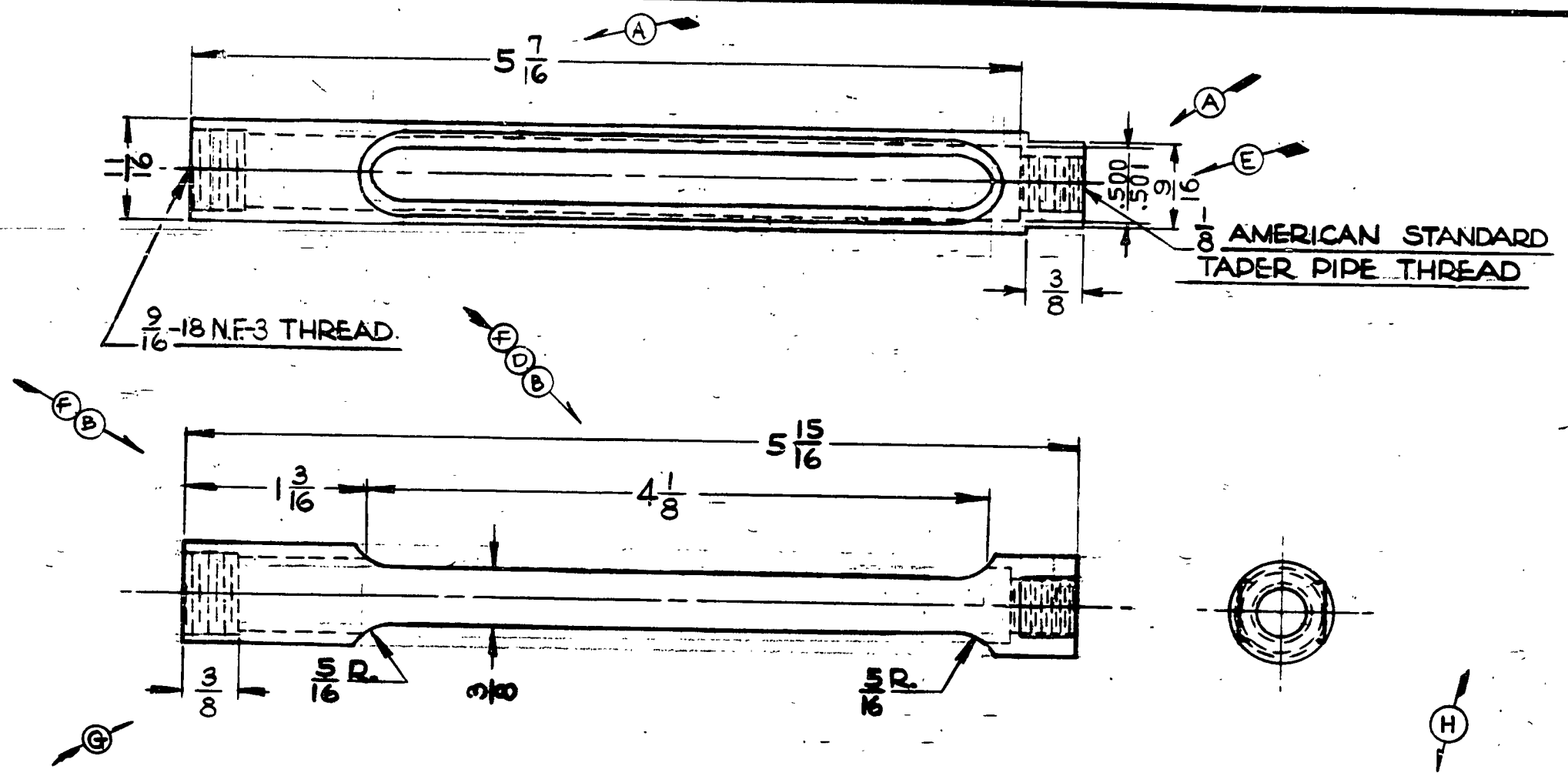

LET.	REVISION	DATE	BY
H	2S ALUM. ROD WAS ALUM. ROD	6-5-50	C.K.
G	3/8 ADDED	3-31-47	RC
F	1 3/16 WAS 7/16; 4 1/8 WAS 4 7/8	3-31-47	RC
E	9/16 WRENCH FLATS ADDED	3-7-47	I.M.M.
D	4 7/8 WAS 4 3/4	2-24-47	C.E.K.
C	CALIBRATIONS, DIM'S. & NOTE REM.	12-10-46	L.R.
B	4 3/64, 7/16 ADDED; 4 1/8 & 3/8 REM.	11-5-46	L.R.
A	.500/.510 WAS .502; 5 5/16 WAS 5 1/2	11-5-46	L.R.

THIS DRAWING IS THE PROPERTY OF THE PIPER AIRCRAFT CORP. AND ITS POSSESSION BY UNAUTHORIZED PERSONS SHALL NOT BE CONSTRUED AS PERMISSION TO REPRODUCE FOR SALE, IN WHOLE OR IN PART, ANY DEVICES SHOWN THEREON.

MODEL	PER PLANE	NEXT ASSEMBLY	SUPERSEDES	SUP. BY
PAU				

PIPER AIRCRAFT CORP.
LOCK HAVEN, PENNA.

PART No.	No. REQ.	SIZE	DESCRIPTION
		11/16 DIA. x 5 15/16 LONG	2S ALUM. ROD

MATERIAL

SCALE FULL SIZE — TOTAL WT.—LBS.

FINISH—PIPER SPECIFICATION #10

MANUFACTURING PRACTICES—PIPER SPECIFICATION #9

GAGE-FUEL

DRAFTSMAN	CHECKER	STANDARDS
R.J.C. 8-27-46	R.E.T. 8-28-46	

10837

PENCILTEX A. & B. SMITH CO., PGH., PA.

A 41

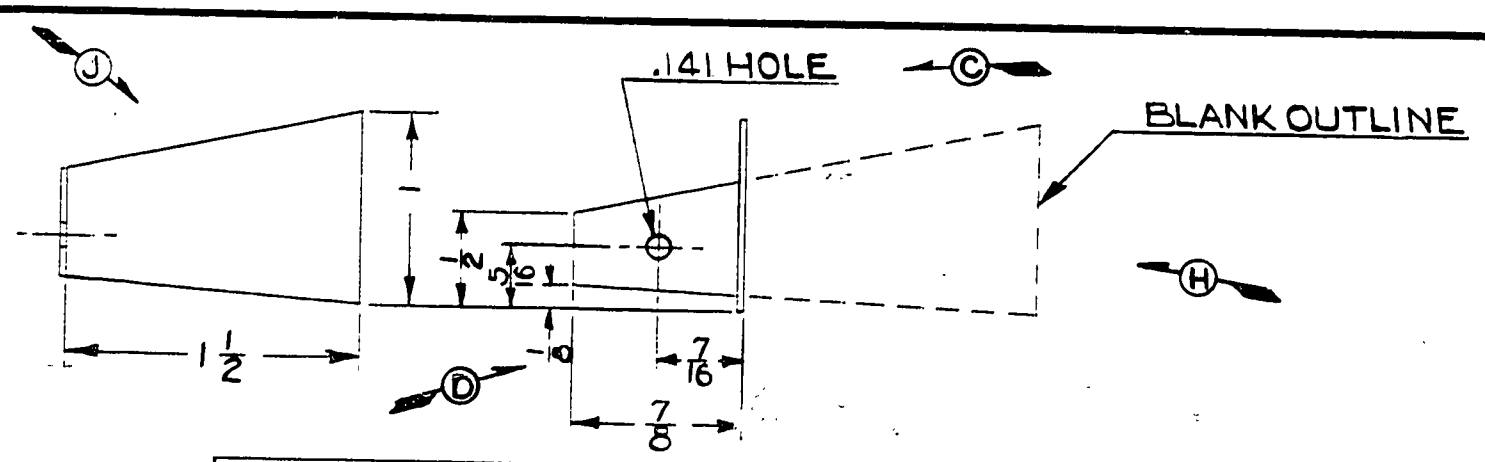

PART NO.	MODEL	PER PLANE	NEXT ASSEMBLY	SUP.
10841	L-4A, L-4B, TG-8	2	12912, 12902	
	J3	2	12912, 12902, 10742	
	J5C, J5D, J4	1	10742, 10702	1013, 164
	J5, HE-1			
	L-14	2	90452, 10742	
10841-1	L-4A, L-4B, TG-8	2	12912, 12902	
	J3	2	12912, 12902, 10742	
	J5C, J5D, J4	1	10742, 10702	1013, 164
	J5, HE-1			
	L-14	2	90453, 10742	

10841 L.H. SHOWN.
10841-1 R.H. OPPOSITE.

E B F G

LET	REVISION	DATE	BY
K	REDRAWN WITHOUT CHANGE	6-13-51	L.E.M.
J	VIEWS REV. TO SHOW L.H. PART	2-25-47	C.E.K.
H	PART REV. BLANK OUTLINE ADDED	11-19-46	C.E.K.
G	10742 N.A. ADDED FOR L-14	6-12-45	J.B.M.
F	2 PER PLANE WAS 1 FOR L-14	6-12-45	J.B.M.
E	L-14 MODEL REF. & TABLE ADDED	3-19-45	H.M.Z.
D	VIEW REVISED, 1/8 ADDED	7-21-43	C.E.K.
C	.141 HOLE ADDED	5-11-43	M.G.S.
B	1 WAS 2 FOR J4, J5, J5C, J5D, HE-1	2-20-43	M.G.S.
A	2 EA. PER SHIP WAS 1 EA.	11-19-42	C.E.K.

MODEL	PER PLANE	NEXT ASSEMBLY	SUPERSEDES	SUP. BY
NOTED	NOTED	NOTED	NOTED	

THIS DRAWING IS THE PROPERTY OF THE PIPER AIRCRAFT CORP. AND ITS POSSESSION BY UNAUTHORIZED PERSONS SHALL NOT BE CONSTRUED AS PERMISSION TO REPRODUCE FOR SALE IN WHOLE OR IN PART ANY DEVICES SHOWN THEREON.

PIPER AIRCRAFT CORP.
LOCK HAVEN, PENNA.

PART NO.	NO. REQ.	SIZE	DESCRIPTION / MATERIAL
		.025 x 1 x 2 3/8	3S 1/2H. ALUM.

SCALE FULL SIZE | TOTAL WT.—LBS.
FINISH—PIPER SPECIFICATION # 10
MANUFACTURING PRACTICES—PIPER SPECIFICATION # 9

FITTING—TRAILING EDGE RIB BOW ATTACHMENT

DRAFTSMAN	CHECKER	STANDARDS	
M.H. 12-17-40	M.D.L. 1-22-41		10841



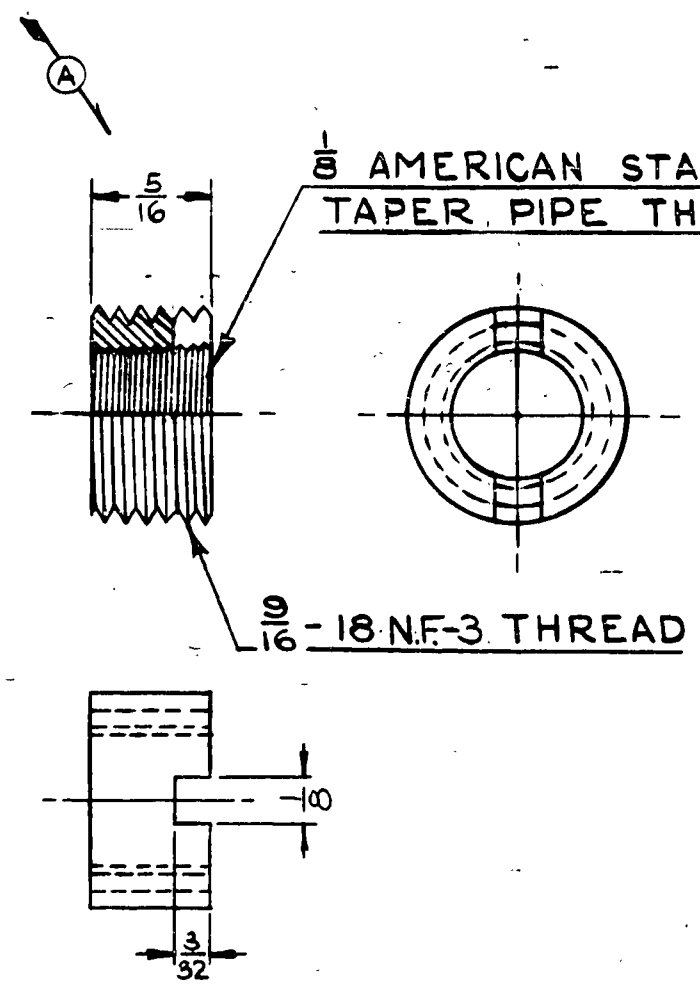

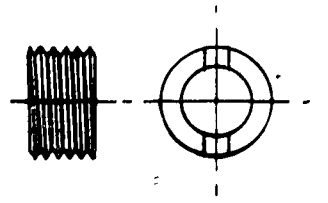

PART No.	No. REQ.	9/16 O.D. x 5/16 L. SIZE	BRASS DESCRIPTION
		MATERIAL	

SCALE TWICE SIZE & NOTED | TOTAL WT.—LBS.

FINISH—PIPER SPECIFICATION #10

MANUFACTURING PRACTICES—PIPER SPECIFICATION #3

BUSHING - FUEL GAGE

THIS DRAWING IS THE PROPERTY OF THE PIPER AIRCRAFT CORP. AND ITS POSSESSION BY UNAUTHORIZED PERSONS SHALL NOT BE CONSTRUED AS PERMISSION TO REPRODUCE FOR SALE, IN WHOLE OR IN PART, ANY DEVICES SHOWN THEREON.

MODEL	PER PLANE	NEXT ASSEMBLY	SUPERSEDES	SUP. BY
PA-11				

LET.	REVISION	DATE	BY
A	5/16 WAS 11/32; 1/8 x 3/32 SLOT ADDED	11-6-46	L.R.

PIPER AIRCRAFT CORP.
LOCK HAVEN, PENNA.

DRAFTSMAN	CHECKER	STANDARDS
C. L. W. 8-27-46	R. E. T. 8-30-46	

10847

PENCILTEX A. & B. SMITH CO., PGH., PA.

A43

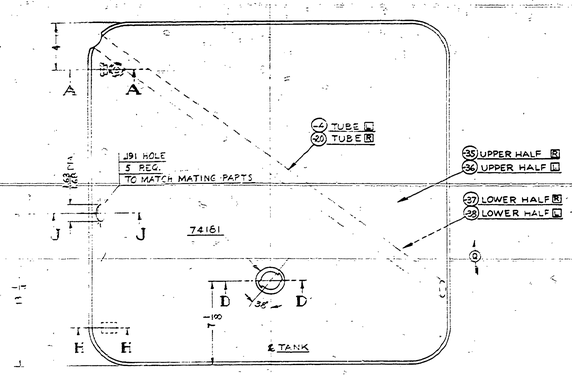

FIG 7
FITTING INSTALLATION DETAILS ON 10849-33 & 10849-34 ONLY
3 IN. = 1 FT.

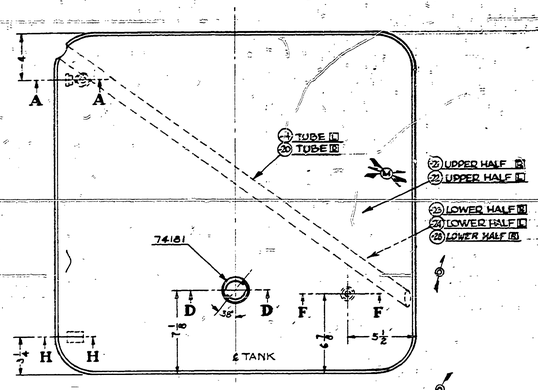

FIG. 4
FITTING INSTALLATION DETAILS ON 10849-15, 10849-16 & 10849-29 ONLY
3 IN. = 1 FT.

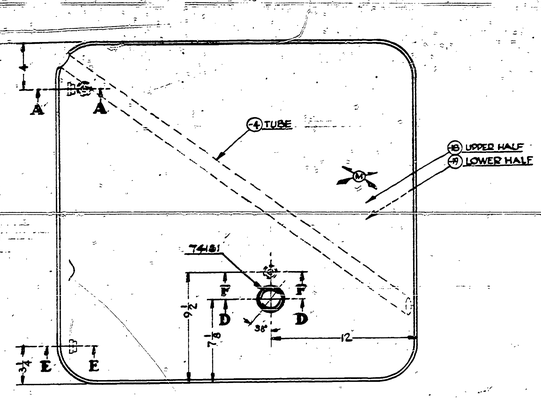

FIG. 1
FITTING INSTALLATION DETAILS ON 10849-11 ONLY
3 IN. = 1 FT.

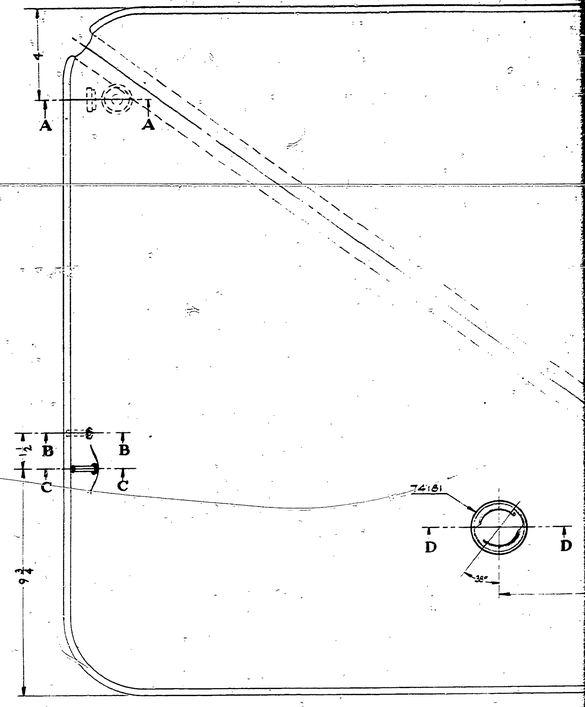

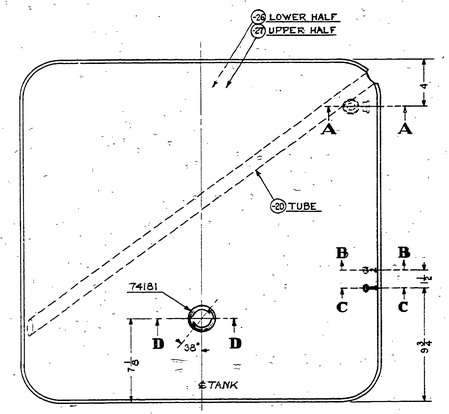

FIG. 5
FITTING INSTALLATION DETAILS ON 10849-25 ONLY
3 IN. = 1 FT.

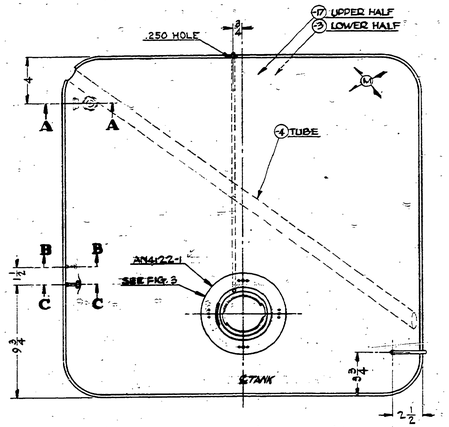

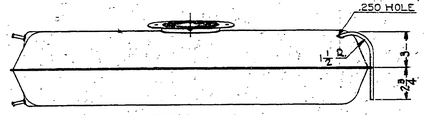

FIG. 2
FITTING INSTALLATION DETAILS ON 10849-12 ONLY
3 IN. = 1 FT.

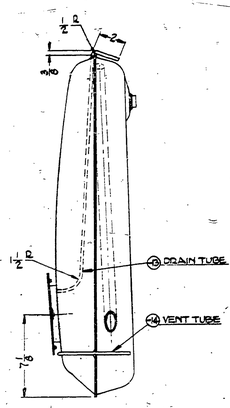

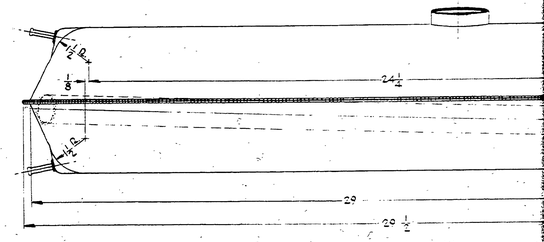

FUEL TANK ASSEMBLY 10849

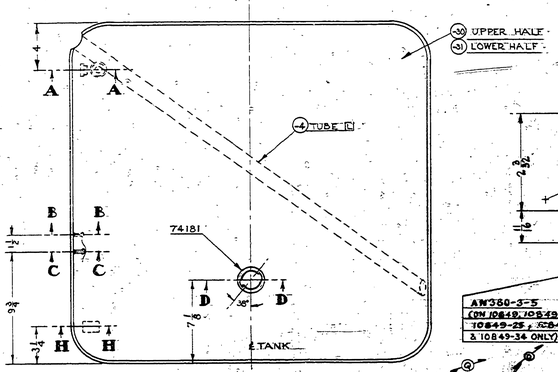

FIG. 6
FITTING INSTALLATION DETAILS ON 10849-32 ONLY
3 IN. = 1 FT.

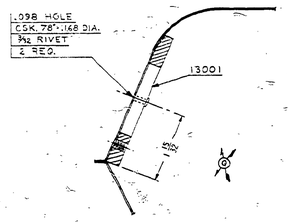

SECTION J-J
FULL SIZE

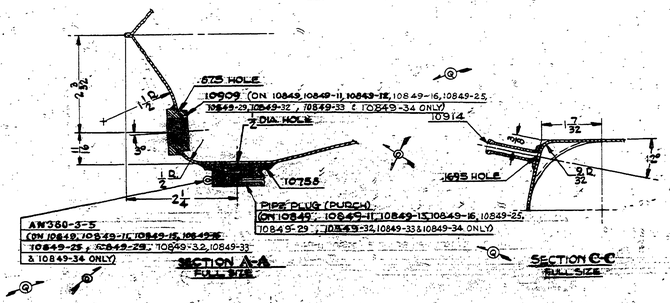

SECTION A-A
FULL SIZE

SECTION C-C
FULL SIZE

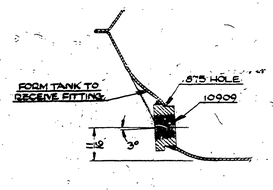

SECTION E-E
FULL SIZE

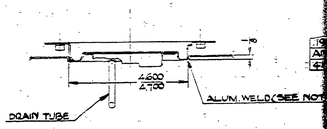

SECTION G-G
6 IN. = 1 FT.

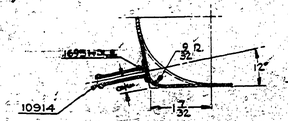

SECTION B-B
FULL SIZE

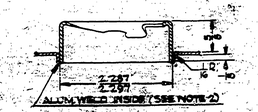

SECTION D-D
FULL SIZE

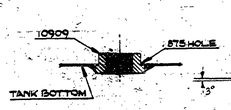

SECTION F-F
FULL SIZE

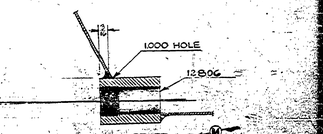

SECTION H-H
FULL SIZE

B2

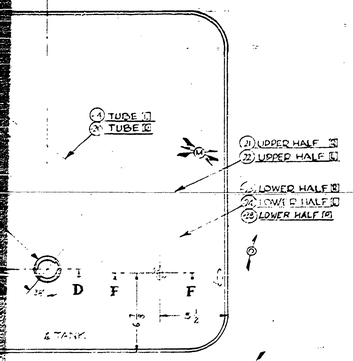

FIG 4
ON DETAILS ON 10849-15, 10849-16 & 10849-29 ONLY
IN. = 1 FT.

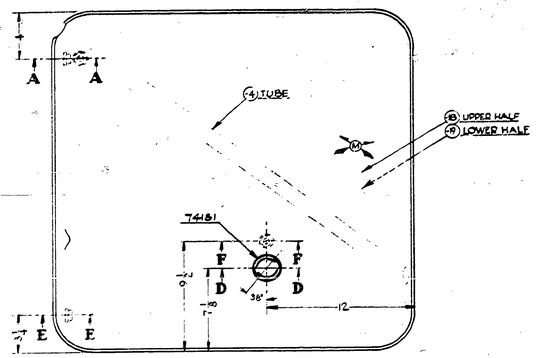

FIG. 1
FITTING INSTALLATION DETAILS ON 10849-11 ONLY
3 IN. = 1 FT.

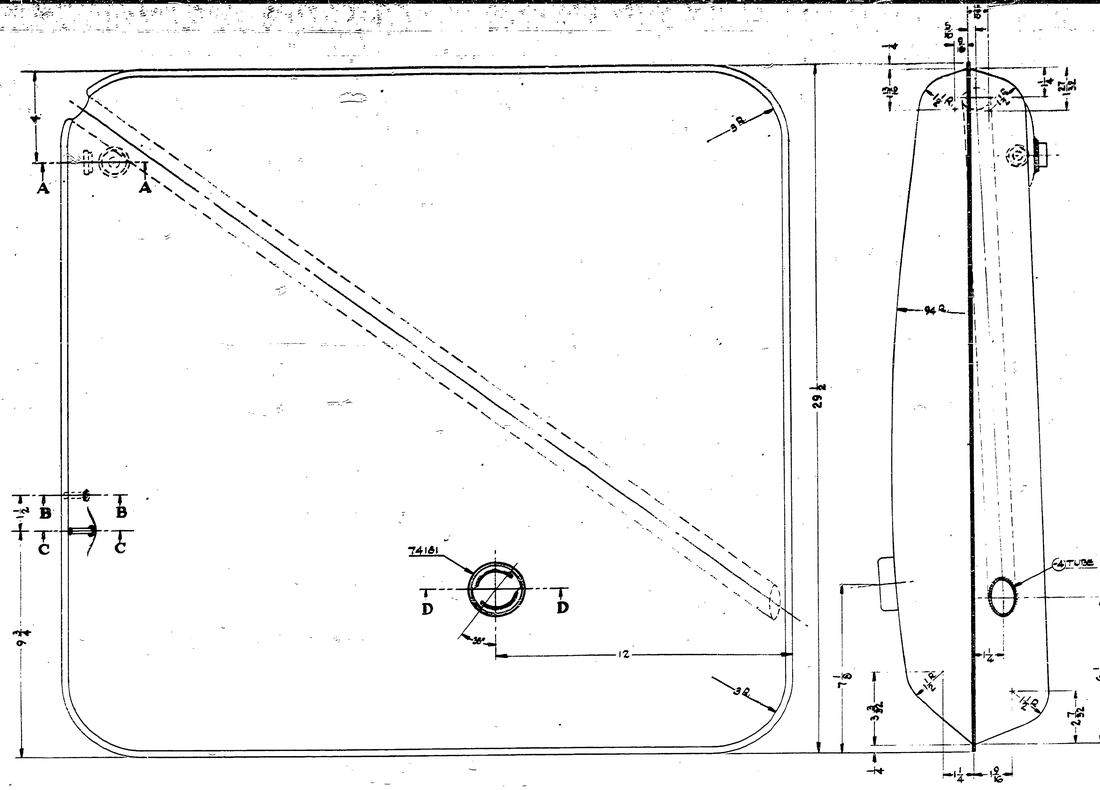

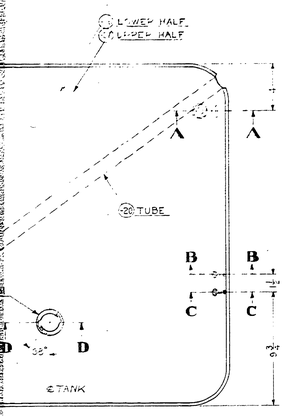

FIG. 5
INSTALLATION DETAILS ON 10849-25 ONLY
3 IN. = 1 FT.

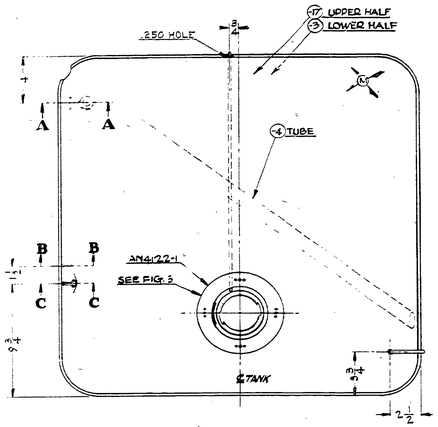

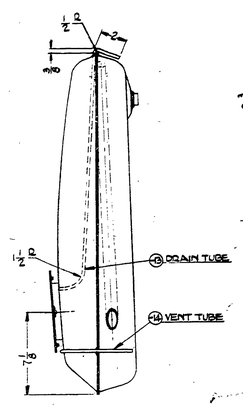

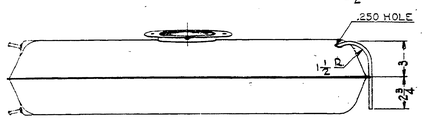

FIG. 2
FITTING INSTALLATION DETAILS ON 10849-12 ONLY
3 IN. = 1 FT.

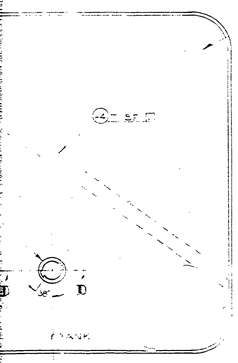

FIG. 6
INSTALLATION DETAILS ON 10849-32 ONLY
3 IN. = 1 FT.

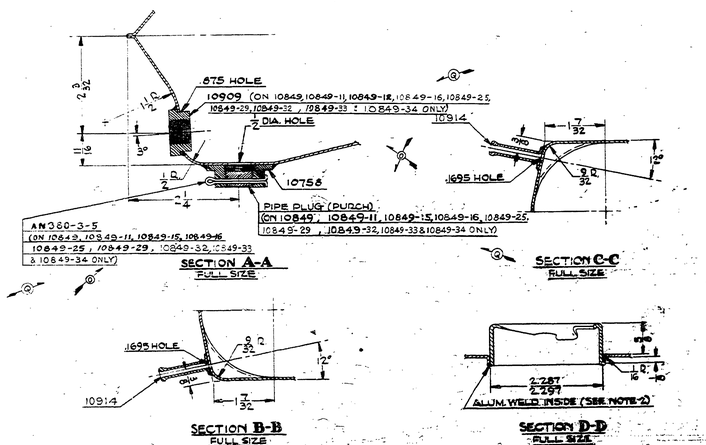

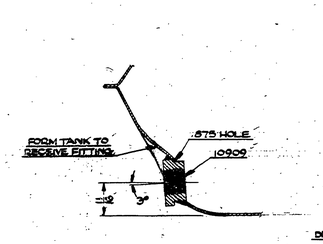

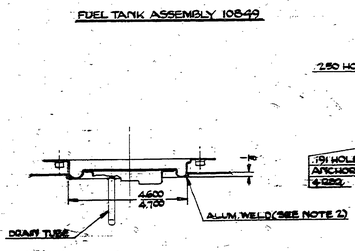

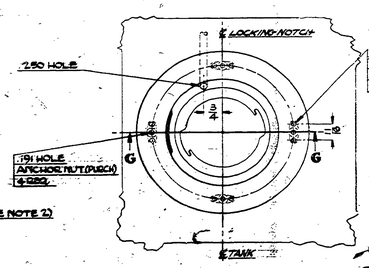

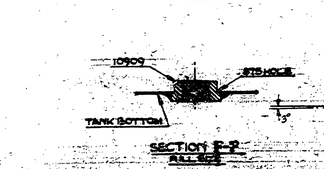

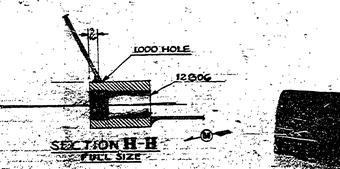

FUEL TANK ASSEMBLY 10849

10849 SHOWN.
10849-11 WITH FITTINGS INSTALLED AS SHOWN IN FIG. 1.
10849-12 WITH FITTINGS INSTALLED AS SHOWN IN FIG. 2.
10849-16 WITH FITTINGS INSTALLED AS SHOWN IN FIG. 4.
10849-15 OPPOSITE TO -16 EXCEPT WITH 1 OF FITTING 10909 OMITTED.
10849-25 WITH FITTINGS INSTALLED AS SHOWN IN FIG. 5.
10849-29 OPPOSITE TO -16
10849-32 WITH FITTINGS INSTALLED AS SHOWN IN FIG. 6
10849-34 WITH FITTINGS INSTALLED AS SHOWN IN FIG. 7
10849-33 OPPOSITE TO -34.

13001	1	PLATE	10849-34 ONLY
-38	1	.040×38×40	52S-0 ALUM. (ON 10849-34 ONLY)
-37	1	.040×38×40	52S-0 ALUM. (ON 10849-33 ONLY)
-36	1	.040×38×40	52S-0 ALUM. (ON 10849-34 ONLY)
-35	1	.040×38×40	52S-0 ALUM. (ON 10849-33 ONLY)
-31	1	.040×38×40	52S-0 ALUM. (ON 10849-32 ONLY)
-30	1	.040×38×40	52S-0 ALUM. (ON 10849-32 ONLY)
-28	1	.040×38×40	52S-0 ALUM. (ON 10849-29 ONLY)
-27	1	.040×38×40	52S-0 ALUM. (ON 10849-25 ONLY)
-26	1	.040×38×40	52S-0 ALUM. (ON 10849-25 ONLY)
12806	1	PIPE	(ON 10849-34 ONLY)
-4	1	1¼ OD×.049	61ST ALUM. (ON 10849, 10849-15, 10849-29, 10849-32, 10849-34 ONLY)
-24	1	.040×38×40	52S0 ALUM. (ON 10849-16 ONLY)
-23	1	.040×38×40	52S0 ALUM. (ON 10849-15 ONLY)
-22	1	.040×38×40	52S0 ALUM. (ON 10849-16 ONLY)
-21	1	.040×38×40	52S0 ALUM. (ON 10849-15 ONLY)
-20	1	1¼ OD×.049×6¼	61ST ALUM. (ON 10849, 10849-15, 10849-29, 10849-32, 10849-34 ONLY)
-19	1	.040×38×40	52S0 ALUM. (ON 10849-11 ONLY)
-18	1	.040×38×40	52S0 ALUM. (ON 10849-11 ONLY)
-17	1	.040×38×40	52S0 ALUM. (ON 10849-11 ONLY)
	8	3/32 RIVET	1100 ALUM.
	4	ANCHOR NUT PLATE	10548-12 (ON 10849-25 ONLY)
AN4122-1	1	ADAPTER	6061-T6 ALUM.
AN960-3-5	1	WASHER	1100 ALUM.
74181	1	CAP	52S0 ALUM.
10914	2	CLIP	52S0 ALUM.
10909	5	FITTING	52S0 ALUM.
10758	1	PLUG	52S0 ALUM.
-16	1	FITTING	52S0 ALUM.
-19	1	FITTING	52S0 ALUM.
	2		52S0 ALUM.
	2		52S0 ALUM.
	2

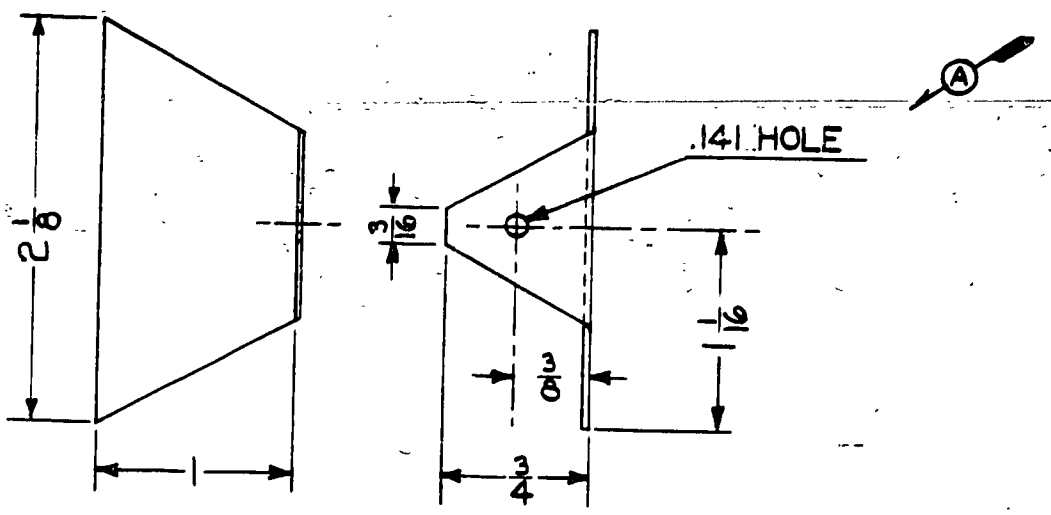

LIMITS, SHOP PRACTICES AND FINISH. UNLESS OTHERWISE NOTED, TO BE IN ACCORDANCE WITH PIPER SPECIFICATIONS #9 AND #10.

PART No.	No. REQ.	SIZE	DESCRIPTION
		.025 x 1 3/4 x 2 1/8	3S-1/2 H. ALUM.
		MATERIAL	

SCALE FULL SIZE — TOTAL WT. - LBS.

FINISH

FITTING — LEADING EDGE RIB BOW ATTACHMENT

MODEL	PER SHIP	NEXT ASSEMBLY	SUPERSEDES	SUP. BY
L-14	2	10742		
J-4A, J-4B, J-5, J-5B	2	12912		
J3	2	12912, 10742		
J5C, J5D, J5E, J5F	2	10742	198	

LET.	REVISION	DATE	BY
C	L-14 MODEL REF. ADDED	6-12-45	J.B.M.
B	REDRAWN, WITHOUT CHANGE	4-7-44	R.D.R.
A	.141 HOLE ADDED	5-11-43	M.G.S.

PIPER AIRCRAFT CORP.
LOCK HAVEN, PENNA.

DRAWN	CHECKED	APPROVED
R. REEDER 4-7-44	R.E.T. 4-10-44	

10851

A 44

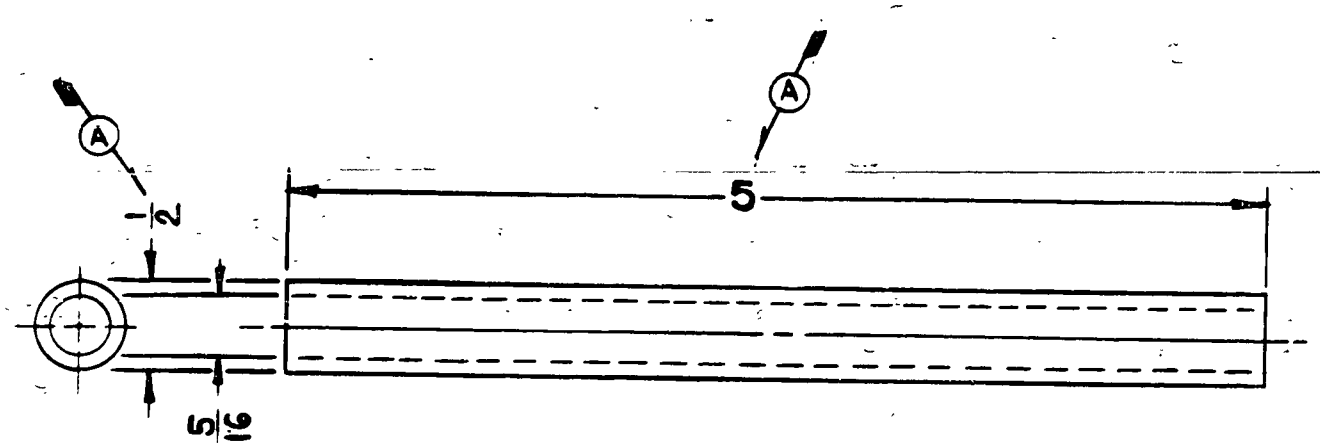

THIS DRAWING IS THE PROPERTY OF THE PIPER AIRCRAFT CORP. AND ITS POSSESSION BY UNAUTHORIZED PERSONS SHALL NOT BE CONSTRUED AS PERMISSION TO REPRODUCE FOR SALE, IN WHOLE OR IN PART, ANY DEVICES SHOWN THEREON.

PART No.	No. REQ.	15/32 OD x 5/16 ID x 5 L. SIZE	GLASS DESCRIPTION
		MATERIAL	
SCALE FULL SIZE		TOTAL WT.–LBS.	
FINISH–PIPER SPECIFICATION #10			
MANUFACTURING PRACTICES–PIPER SPECIFICATION #9			

TUBE – FUEL GAGE

MODEL	PER PLANE	NEXT ASSEMBLY	SUPERSEDES	SUP. BY
PA-11				

LET.	REVISION	DATE	BY.
A	1/2 WAS 15/32; 5 WAS 5 1/8	11-5-46	L.R.

PIPER AIRCRAFT CORP.
LOCK HAVEN, PENNA.

DRAFTSMAN	CHECKER	STANDARDS
B.B.C. 8-26-46	R.E.T. 8-30-46	

10852

PENCILTEX A. & B. SMITH CO., PGH., PA.

A45

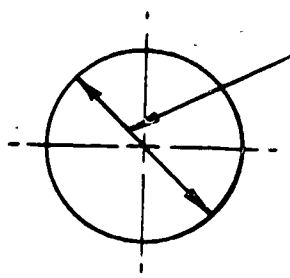

1/4 DIA. SPHERE

ACTUAL SIZE

NOTE:

FLOAT COLORED RED.

THIS DRAWING IS THE PROPERTY OF THE PIPER AIRCRAFT CORP. AND ITS POSSESSION BY UNAUTHORIZED PERSONS SHALL NOT BE CONSTRUED AS PERMISSION TO REPRODUCE FOR SALE, IN WHOLE OR IN PART, ANY DEVICES SHOWN THEREON.

PART No.	No. REQ.	SIZE	MATERIAL
		1/4 x 1/4 x 1/4	CORK

SCALE 4 X SIZE — TOTAL WT.—LBS.

FINISH—PIPER SPECIFICATION #10

MANUFACTURING PRACTICES—PIPER SPECIFICATION #9

FLOAT - FUEL GAGE

MODEL	PER PLANE	NEXT ASSEMBLY	SUPERSEDES	SUP. BY
PA-11				

LET.	REVISION	DATE	BY

PIPER AIRCRAFT CORP.
LOCK HAVEN, PENNA.

DRAFTSMAN	CHECKER	STANDARDS
B.B.C. 8-27-46	R.E.T. 8-30-46	

10853

PENCILTEX A. & B. SMITH CO., PGH., PA.

A46

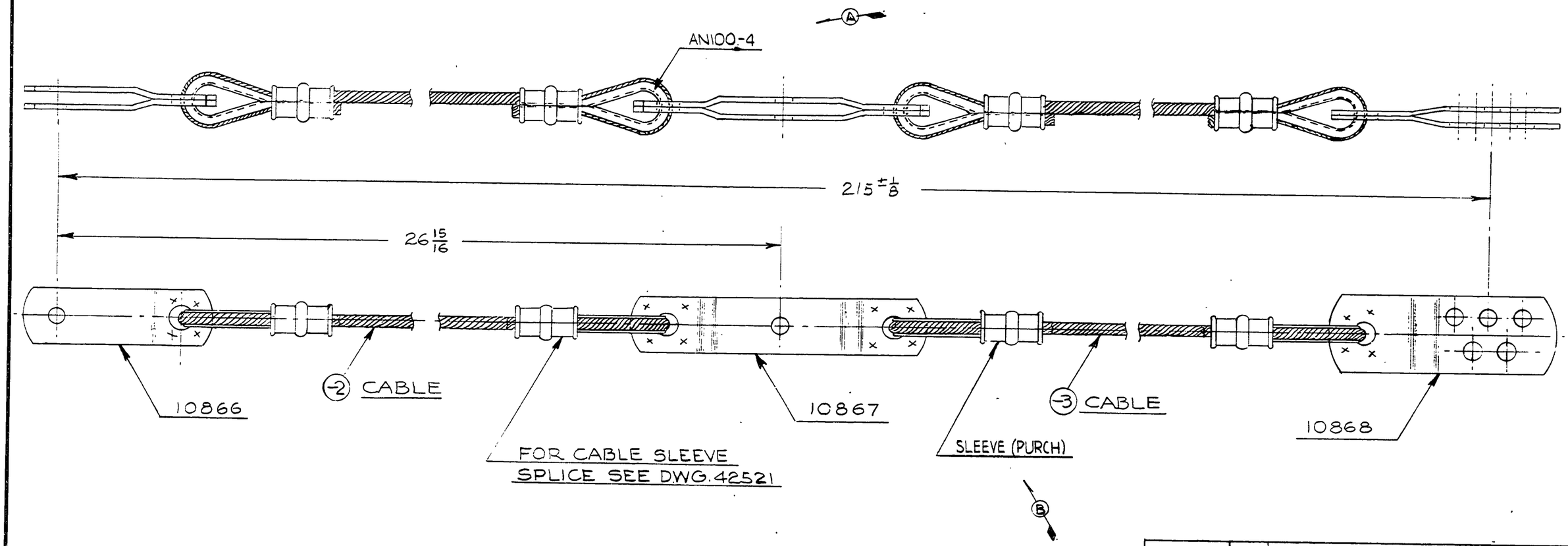

ASSY. NO.	REMARKS
10865	AS SHOWN
10865-4	AS SHOWN EXCEPT CABLE MAT'L IS STAINLESS STEEL (USED ON SEAPLANES)

PART No.	No. REQ.	SIZE	DESCRIPTION / MATERIAL
	4		SLEEVE #18-3-M PURCH. THE NATIONAL TELEPHONE SUPPLY CO.
-3	1	191 L.	19 STRAND NON-FLEX.
-2	1	30 L	STEEL CABLE. 1/8 DIA.
AN100-4	4		THIMBLE
42521	-		CABLE SLEEVE SPLICE
10868	1		REAR FITTING ASSY
10867	1		CENTER FITTING ASSY
10866	1		FRONT FITTING ASSY

SCALE FULL SIZE — TOTAL WT.—LBS.

FINISH—PIPER SPECIFICATION #10

MANUFACTURING PRACTICES—PIPER SPECIFICATION #9

LET.	REVISION	DATE	BY
C	TABLE 3-4 ADDED	2-25-47	I.D.B.
B	SLEEVE #18-3-M ADDED	9-16-46	L.R.
A	AN100-4 WAS THIMBLE	9-16-46	L.R.

MODEL	PER PLANE	NEXT ASSEMBLY	SUPERSEDES	SUP. BY
J3	2	22176		

THIS DRAWING IS THE PROPERTY OF THE PIPER AIRCRAFT CORP. AND ITS POSSESSION BY UNAUTHORIZED PERSONS SHALL NOT BE CONSTRUED AS PERMISSION TO REPRODUCE FOR SALE, IN WHOLE OR IN PART. ANY DEVICES SHOWN THEREON

PIPER AIRCRAFT CORP.
LOCK HAVEN, PENNA.

CABLE ASSEMBLY — RUDDER

DRAFTSMAN	CHECKER	STANDARDS
C.E.K. 8-8-46	R.E.T. 8-9-46	

10865

450

A450

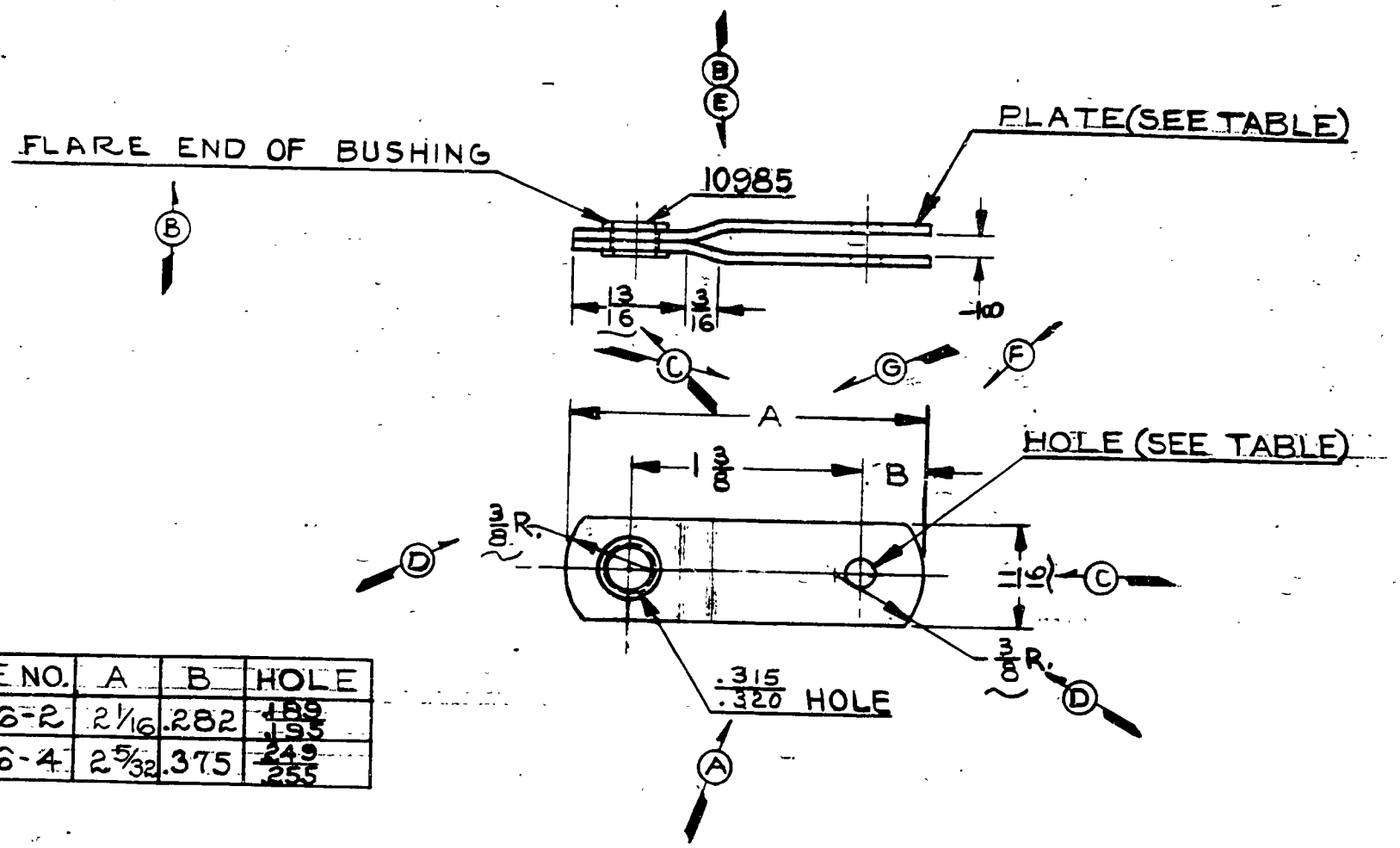

PART NO.	PLATE NO.	A	B	HOLE
10866	10866-2	2 1/16	.282	.189 / .193
10866-3	10866-4	2 5/32	.375	.249 / .255

LET.	REVISION	DATE	BY
H	-3 + -4 ADDED	2-21-49	RM
G	2 1/16 WAS 2 1/8	2-4-48	HRK
F	.282 WAS .344, 2 1/8 WAS 2 5/16	6-26-47	RC
E	10985 WAS 86102-18	1-13-47	T.N.K.
D	3/8 R. WAS 1/2 R.	11-8-46	I.M.M.
C	13/16 WAS 3/4, 2 3/4 WAS 2 1/8, 11/16 WAS 5/8	11-8-46	I.M.M.
B	86102-18 & NOTE ADDED, SPOTWELD REM	11-8-46	I.M.M.
A	.315/.320 HOLE WAS .250 HOLE	11-8-46	I.M.M.

THIS DRAWING IS THE PROPERTY OF THE PIPER AIRCRAFT CORP. AND ITS POSSESSION BY UNAUTHORIZED PERSONS SHALL NOT BE CONSTRUED AS PERMISSION TO REPRODUCE FOR SALE, IN WHOLE OR IN PART, ANY DEVICES SHOWN THEREON.

MODEL	PER PLANE	NEXT ASSEMBLY	SUPERSEDES	SUP. BY
J-3	-4	10985, 10869, 10870		

PIPER AIRCRAFT CORP.
LOCK HAVEN, PENNA.

PART No.	No. REQ.	SIZE	DESCRIPTION
10985	1	BUSHING	
-4	2	.062 x 11/16 x NOTED	#1025 STEEL
-2		MATERIAL	

SCALE FULL SIZE — TOTAL WT.—1.98.

FINISH—PIPER SPECIFICATION #10

MANUFACTURING PRACTICES—PIPER SPECIFICATION #9

FITTING ASSEMBLY-
RUDDER CABLE FRONT

DRAFTSMAN	CHECKER	STANDARDS
J.E.H. 8-7-46	R.E.T. 8-8-46	

10866

PENCILTEX A. & B. SMITH CO., PGH., PA.

A47

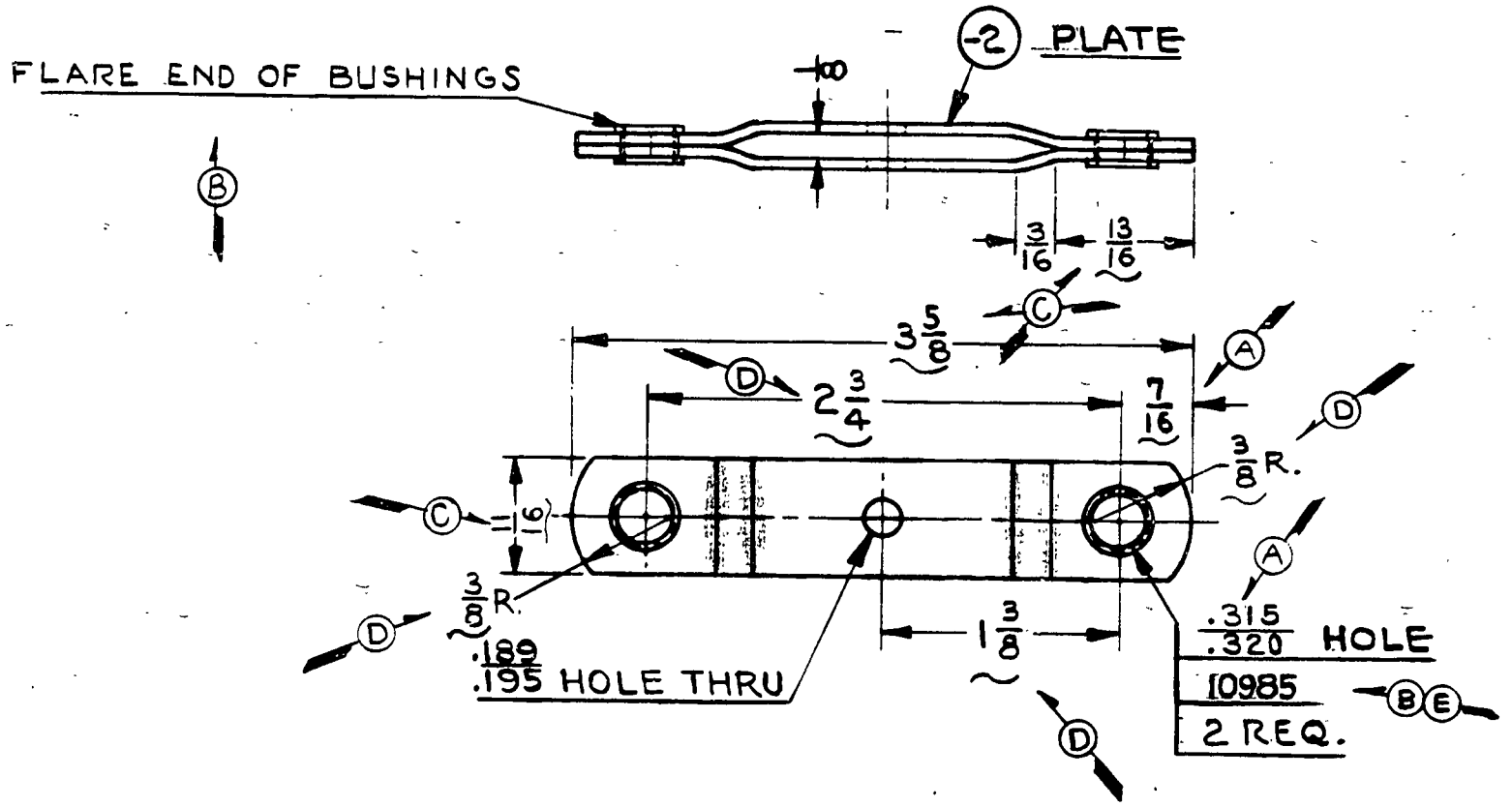

10985	2	BUSHING	
-2	2	.062 x 11/16 x 3 11/16	#1025 STEEL
PART No.	No. REQ.	SIZE	DESCRIPTION
		MATERIAL	
SCALE FULL SIZE		TOTAL WT.–LBS.	

FINISH–PIPER SPECIFICATION #10

MANUFACTURING PRACTICES–PIPER SPECIFICATION #9

FITTING ASSEMBLY– RUDDER CABLE CENTER

LET.	REVISION	DATE	BY
E	10985 WAS 86102-18	1-13-47	T.N.K.
D	2¾ WAS 2½, 1 3/8 WAS 1¼, 3/8 R. WAS ½ R	11-8-46	I.M.M.
C	3 5/8 WAS 3 1/4, 11/16 WAS 5/8, 13/16 WAS 3/4	11-8-46	I.M.M.
B	86102-18 & NOTE ADDED, SPOTWELD REM.	11-8-46	I.M.M.
A	.315/.320 HOLE WAS .250 HOLE. 7/16 WAS 5/8	11-8-46	I.M.M.

MODEL	PER PLANE	NEXT ASSEMBLY	SUPERSEDES	SUP. BY
J3	2	10865		

THIS DRAWING IS THE PROPERTY OF THE PIPER AIRCRAFT CORP. AND ITS POSSESSION BY UNAUTHORIZED PERSONS SHALL NOT BE CONSTRUED AS PERMISSION TO REPRODUCE FOR SALE, IN WHOLE OR IN PART, ANY DEVICES SHOWN THEREON.

PIPER AIRCRAFT CORP.
LOCK HAVEN, PENNA.

DRAFTSMAN	CHECKER	STANDARDS
J.E.H. 8-7-46	R.E.T. 8-8-46	

10867

PENCILTEX A. & B. SMITH CO., PGH., PA.

A 48

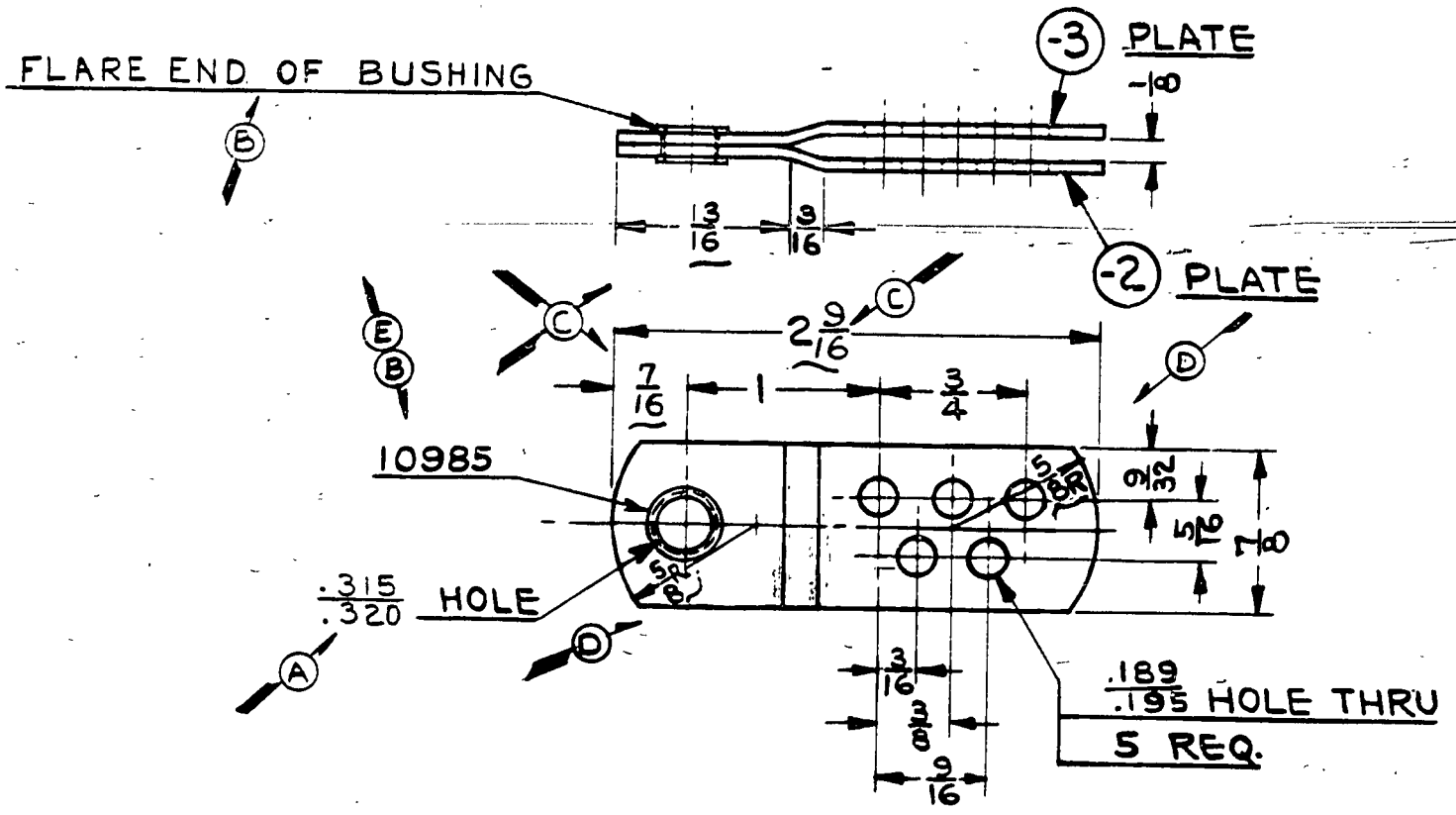

B

10985	1	BUSHING		
-3	1	.062 x 7/8 x 2 13/32	#1025 STEEL	
-2	1	.062 x 7/8 x 2 19/32	#1025 STEEL	
PART No.	No. REQ.	SIZE	DESCRIPTION	
		MATERIAL		
SCALE FULL SIZE		TOTAL WT.--LBS.		
FINISH—PIPER SPECIFICATION #10				
MANUFACTURING PRACTICES—PIPER SPECIFICATION #9				

THIS DRAWING IS THE PROPERTY OF THE PIPER AIRCRAFT CORP. AND ITS POSSESSION BY UNAUTHORIZED PERSONS SHALL NOT BE CONSTRUED AS PERMISSION TO REPRODUCE FOR SALE, IN WHOLE OR IN PART, ANY DEVICES SHOWN THEREON.

LET.	REVISION	DATE	BY
E	10985 WAS 86102-18	1-13-47	T.N.K.
D	5/8R WAS 3/4R.	11-7-46	I.M.M.
C	2 9/16 WAS 2 1/2, 13/16 WAS 7/8, 7/16 WAS 3/8	11-7-46	I.M.M.
B	86102-18 & NOTE ADD, SPOT WELD REF.	11-7-46	I.M.M.
A	.315/.320 HOLE WAS .250 HOLE	11-7-46	I.M.M.

MODEL	PER PLANE	NEXT ASSEMBLY	SUPERSEDES	SUP. BY
13	2	10865		

PIPER AIRCRAFT CORP.
LOCK HAVEN, PENNA.

DRAFTSMAN	CHECKER	STANDARDS
J.E.H. 8-8-46	R.E.T. 8-8-46	

FITTING ASSEMBLY-RUDDER CABLE REAR

10868

PENCILTEX A. & B. SMITH CO., PGH., PA.

A49

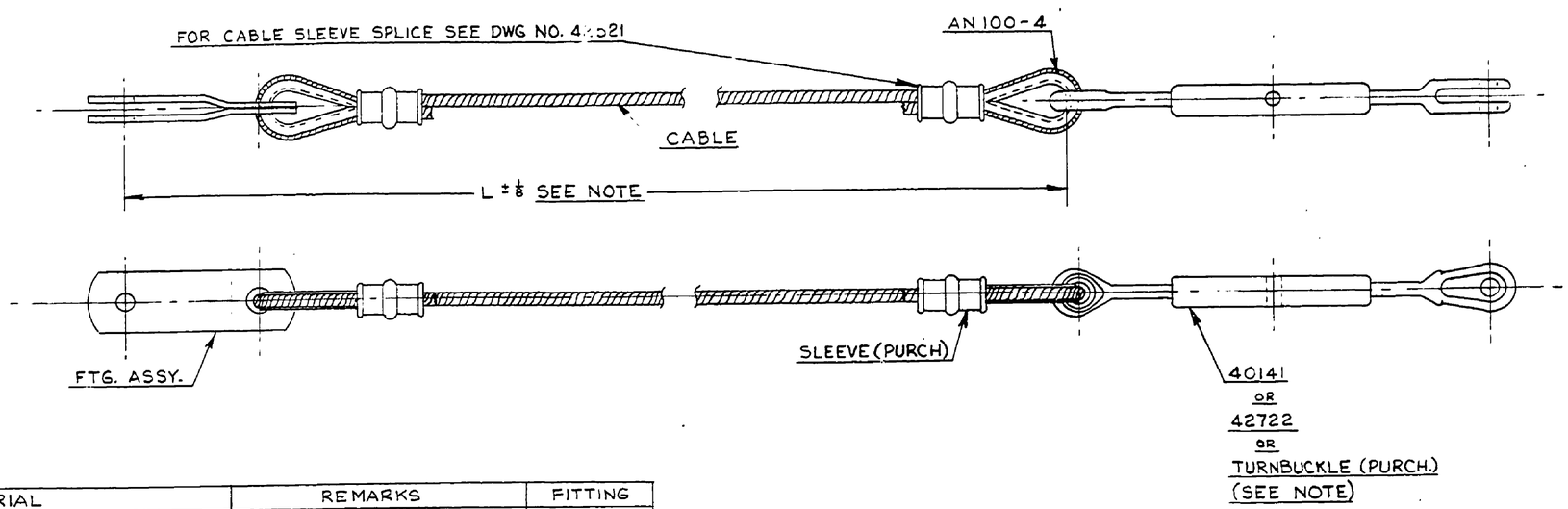

ASSY NO.	L	MATERIAL	REMARKS	FITTING
10870	137 3/8	19 STRAND NON FLEX. STL. CABLE 1/8 DIA.		10866
10870-2	137 3/8	19 STRAND NON FLEX. ST. STL. CABLE 1/8 DIA.	USED ON SEAPLANES	10866
10870-3	148	7×19 GAL. AIRCRAFT CORD 1/8 DIA.	AILERON CABLE	10866
10870-4	129 5/8	7×19 GAL. AIRCRAFT CORD 1/8 DIA.	AILERON CABLE	10866
10870-5	147 1/4	7×19 GAL. AIRCRAFT CORD 1/8 DIA.	ELEVATOR CABLE	10866
10870-6	147	19 STRAND NON FLEX. STL. CABLE 1/8 DIA.	ELEVATOR CABLE	10866
10870-7	158 15/16	19 STRAND NON FLEX. STL. CABLE 1/8 DIA.	ELEVATOR CABLE	10866-3
10870-8	204 5/16	7×19 GAL. AIRCRAFT CORD 1/8 DIA.	ELEVATOR CABLE	10866-3
10870-9	147 1/4	7×19 FLEXIBLE ST. STL. AIRCRAFT CABLE 1/8 DIA.	USED ON SEAPLANES (ELEVATOR)	10866
10870-10	147	19 STRAND NON FLEX. ST. STL. CABLE 1/8 DIA.	USED ON SEAPLANES (ELEVATOR)	10866
10870-11	158 15/16	19 STRAND NON FLEX. ST. STL. CABLE 1/8 DIA.	USED ON SEAPLANES [illegible]	10866-3
10870-12	204 5/16	7×19 FLEXIBLE ST. STL. AIRCRAFT CABLE 1/8 DIA.	USED ON SEAPLANES [illegible]	10866-3

NOTE:
DIMENSION SHOWN USED WITH TURNBUCKLE 42722 OR # 5157-16S (PURCH.). WHEN TURNBUCKLE 40141 IS USED THE LENGTH OF THE CABLE TO BE MADE 3/8 LONGER THAN DIMENSION SHOWN.

	2	SLEEVE # 18-3-M PURCH. THE NATIONAL TELEPHONE SUPPLY CO.	
	1	"L" + 3 1/2 LONG	CABLE (SEE TABLE)
AN100-4	2	THIMBLE	
	1	TURNBUCKLE # 5157-16 S PURCH AERO SUPPLY CO. OR	
42722		TURNBUCKLE OR	
40141		TURNBUCKLE	
42521	-	CABLE SLEEVE SPLICE	
	1	FITTING ASS'Y. (SEE TABLE)	
PART No.	NO. REQ.	SIZE DESCRIPTION / MATERIAL	
SCALE FULL SIZE		TOTAL WT.-LBS.	
FINISH-PIPER SPECIFICATION #10			
MANUFACTURING PRACTICES-PIPER SPECIFICATION #9			

CABLE ASSEMBLY - ELEVATOR

THIS DRAWING IS THE PROPERTY OF THE PIPER AIRCRAFT CORP. AND ITS POSSESSION BY UNAUTHORIZED PERSONS SHALL NOT BE CONSTRUED AS PERMISSION TO REPRODUCE FOR SALE, IN WHOLE OR IN PART, ANY DEVICES SHOWN THEREON

LET.	REVISION	DATE	BY
K	158 15/16 WAS 159 3/16 ON -7 & -11	5-25-50	C.K.
J	-11 & -12 ADDED	5-3-50	H.R.K.
H	REDRAWN & REVISED	7-29-49	R.R.

MODEL	PER PLANE	NEXT ASSEMBLY	SUPERSEDES	SUP. BY

PIPER AIRCRAFT CORP.
LOCK HAVEN, PENNA.

DRAFTSMAN	CHECKER	STANDARDS
R. REEDER 7-29-49	H.R.K. 7-29-49	

10870

716

A716

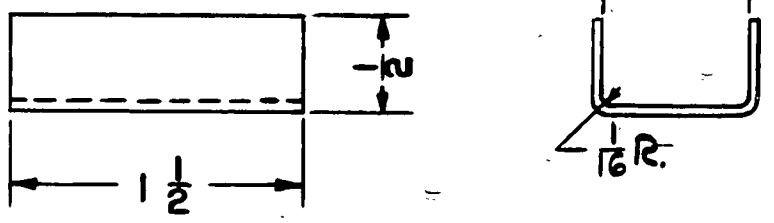

THIS DRAWING IS THE PROPERTY OF THE PIPER AIRCRAFT CORP. AND ITS POSSESSION BY UNAUTHORIZED PERSONS SHALL NOT BE CONSTRUED AS PERMISSION TO REPRODUCE FOR SALE, IN WHOLE OR IN PART, ANY DEVICES SHOWN THEREON.

LET.	REVISION	DATE	BY

MODEL	PER PLANE	NEXT ASSEMBLY	SUPERSEDES	SUP. BY

PIPER AIRCRAFT CORP.
LOCK HAVEN, PENNA.

PART No.	No. REQ.	SIZE	DESCRIPTION
		.045x1 1/2x1 3/4	#1025 STEEL
		MATERIAL	

SCALE FULL SIZE — TOTAL WT.—LBS.

FINISH—PIPER SPECIFICATION #10

MANUFACTURING PRACTICES—PIPER SPECIFICATION #9

BRACKET

DRAFTSMAN	CHECKER	STANDARDS
B.B.C. 10-14-46	J.E.H. 10-14-46	

10906

PENCILTEX A. & B. SMITH CO., PGH., PA.

50

A 50

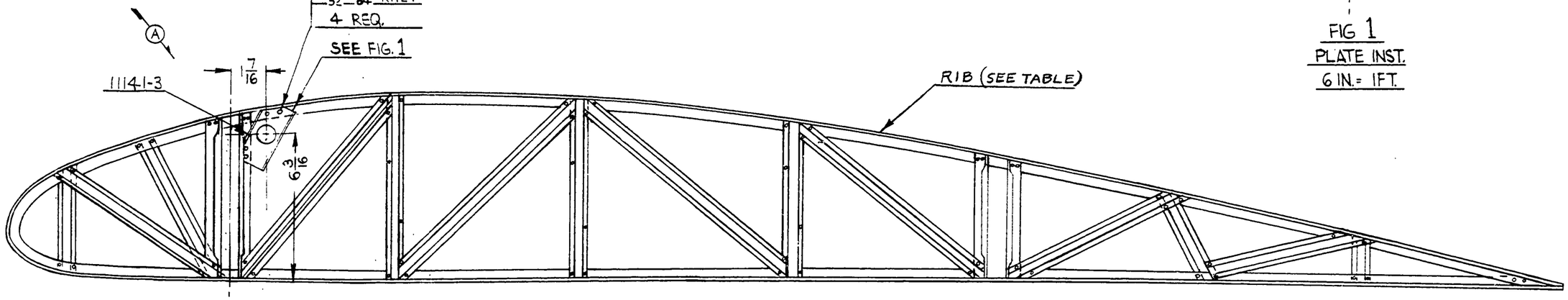

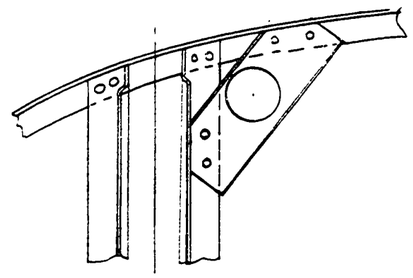

FIG 1
PLATE INST.
6 IN. = 1 FT.

ASS'Y. NO.	RIB NO.
10907	13052-2
10907-2	13052-7

"This drawing is the property of the Piper Aircraft Corp. and its possession by unauthorized persons shall not be construed as permission to reproduce for sale, in whole or in part, any devices shown thereon."

	4	3/32 x 9/64 L.	ST'L. TUBULAR CD. PLATED RIVET
SEE TABLE	1	RIB ASSEMBLY	
11141-3	1	PLATE	
PART No.	No. REQ.	SIZE	DESCRIPTION
SCALE 3 IN = 1 FT. & NOTED		MATERIAL	TOTAL WT.—LBS.

FINISH—PIPER SPECIFICATION #10
MANUFACTURING PRACTICES—PIPER SPECIFICATION #9

RIB ASSEMBLY — WING FULL

LET.	REVISION	DATE	BY
B	-2 ADDED.	1-9-50	J.O.
A	11141-3 WAS 11141, 6 3/16 WAS 5 7/8	12-12-49	K.D.

MODEL	PER PLANE	NEXT ASSEMBLY	SUPERSEDES	SUP. BY

PIPER AIRCRAFT CORP.
LOCK HAVEN, PENNA.

L.R.	J.E.H.	
10-15-46	10-17-46	
DRAFTSMAN	CHECKER	STANDARDS

10907

NO. 198-M ALBANENE A. & B. SMITH CO., PGH., PA.

A451

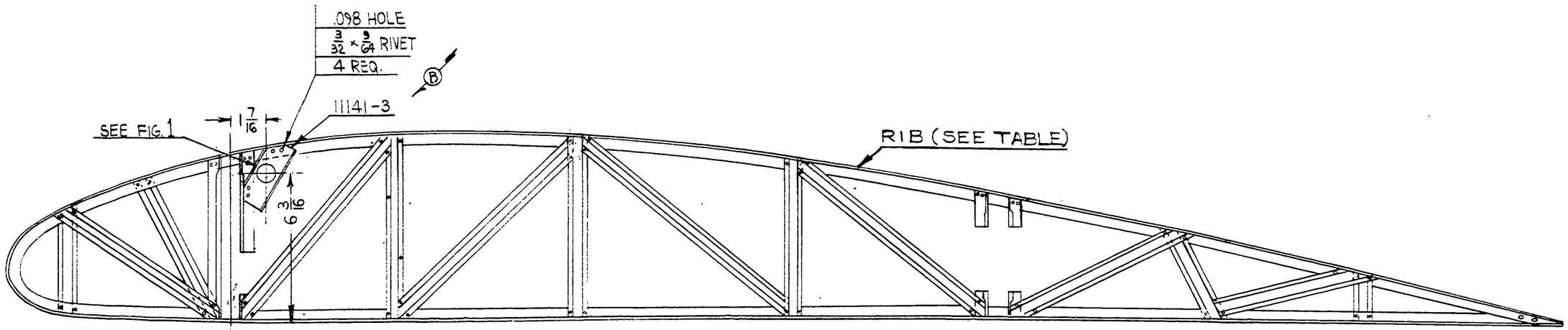

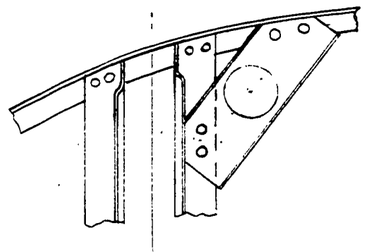

FIG 1
PLATE INST.
6 IN. = 1 FT.

PART NO.	RIB
10908	13052-4
10908-2	13052-5
10908-3	13052-6
10908-4	13052-8

"This drawing is the property of the Piper Aircraft Corp. and its possession by unauthorized persons shall not be construed as permission to reproduce for sale, in whole or in part, any devices shown thereon."

PART No.	No. REQ.	SIZE	DESCRIPTION MATERIAL
13052-8	1		RIB ASS'Y. (USED ON 10908-4 ONLY)
13052-6	1		RIB ASS'Y (USED ON 10908-3 ONLY)
13052-5	1		RIB ASSY (USED ON 10908-2 ONLY)
	4	3/32 × 9/64 L.	ST'L. TUBULAR CD. PLATED RIVET
13052-4	1		RIB ASSEMBLY (USED ON 10908 ONLY)
11141-3	1		PLATE

SCALE 3 IN. = 1 FT. & NOTED — TOTAL WT.—LBS.

FINISH—PIPER SPECIFICATION #10

MANUFACTURING PRACTICES—PIPER SPECIFICATION #9

RIB ASSEMBLY – WING FULL

LET.	REVISION	DATE	BY
C	– 4 ADDED	1-4-50	J.O.
B	–3 & 13052-6 ADDED, 11141-3 WAS 11141, 6 3/16 WAS 5 7/8	12-9-49	K.D.
A	– 2 ADDED	2-10-49	R.M.

MODEL | PER PLANE | NEXT ASSEMBLY | SUPERSEDES | SUP. BY

PIPER AIRCRAFT CORP.
LOCK HAVEN, PENNA.

L.R.	J.E.H.	
10-16-46	10-17-46	
DRAFTSMAN	CHECKER	STANDARDS

10908

NO. 166-M ALBANENE A. & B. SMITH CO., PGH., PA.

452

A452

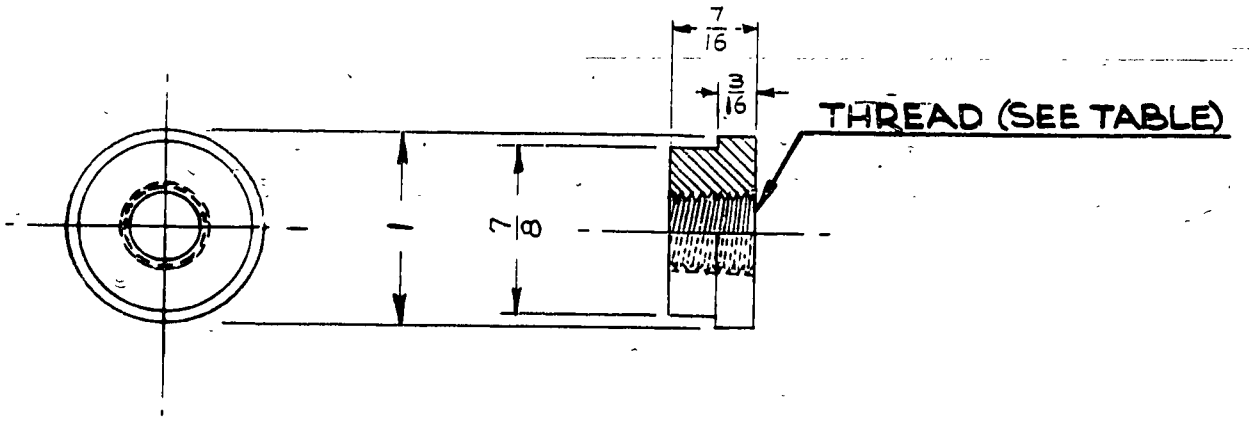

PART NO.	THREAD
10909	3/8 A.S. TAPER PIPE
10909-2	1/4 A.S. TAPER PIPE

(B)

LET.	REVISION	DATE	BY
B	-2 & TABLE ADDED	7-15-47	RC
A	3/8 PIPE TH'D. WAS 1/4	2-13-47	C.E.K.

THIS DRAWING IS THE PROPERTY OF THE PIPER AIRCRAFT CORP. AND ITS POSSESSION BY UNAUTHORIZED PERSONS SHALL NOT BE CONSTRUED AS PERMISSION TO REPRODUCE FOR SALE, IN WHOLE OR IN PART, ANY DEVICES SHOWN THEREON.

RA-N MODEL	PER PLANE	NEXT ASSEMBLY	SUPERSEDES	SUP. BY

PIPER AIRCRAFT CORP.
LOCK HAVEN, PENNA.

PART No.	No. REQ.	SIZE	DESCRIPTION
		1 DIA. X 7/16	25-1/2H ALUM.

MATERIAL

SCALE FULL SIZE — TOTAL WT.—1.88.

FINISH—PIPER SPECIFICATION #10

MANUFACTURING PRACTICES—PIPER SPECIFICATION #9

FITTING

DRAFTSMAN	CHECKER	STANDARDS
C.E.K. 10-11-46	R.D.M. 10-11-46	

10909

PENCILTEX A. & B. SMITH CO., PGH., PA.

51

A51

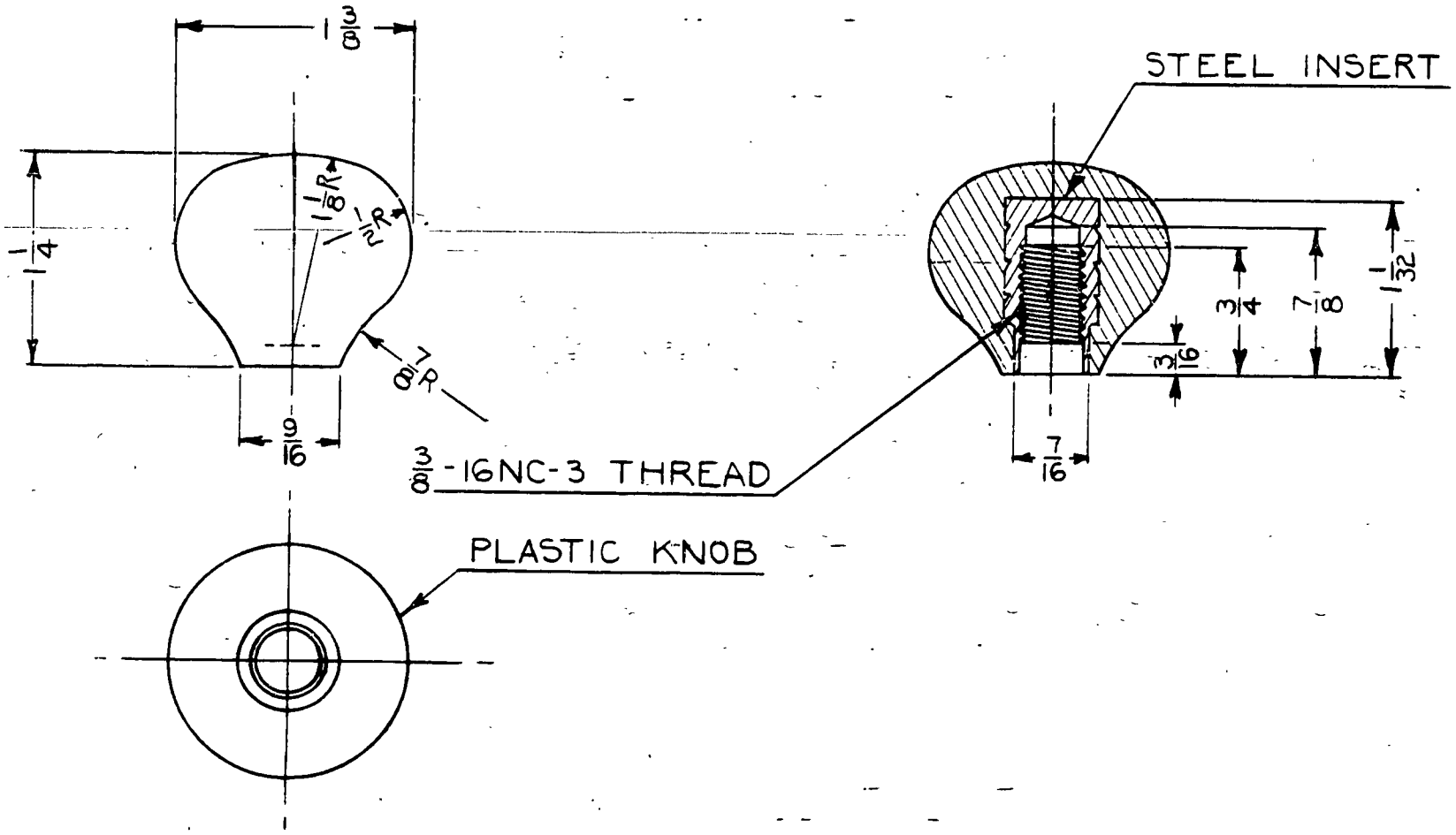

LET.	REVISION	DATE	BY

THIS DRAWING IS THE PROPERTY OF THE PIPER AIRCRAFT CORP. AND ITS POSSESSION BY UNAUTHORIZED PERSONS SHALL NOT BE CONSTRUED AS PERMISSION TO REPRODUCE FOR SALE, IN WHOLE OR IN PART, ANY DEVICES SHOWN THEREON.

MODEL	PER PLANE	NEXT ASSEMBLY	SUPERSEDES	SUP. BY

PIPER AIRCRAFT CORP.
LOCK HAVEN, PENNA.

PART No.	No. REQ.	MATERIAL

SCALE FULL SIZE — TOTAL WT.—LBS.

FINISH—PIPER SPECIFICATION #10

MANUFACTURING PRACTICES—PIPER SPECIFICATION #9

KNOB ASSEMBLY

DRAFTSMAN	CHECKER	STANDARDS
E. L. N. 10-15-46	R. D. M. 10-17-46	

10911

PENCILTEX A. & B. SMITH CO., PGH., PA.

52

A52

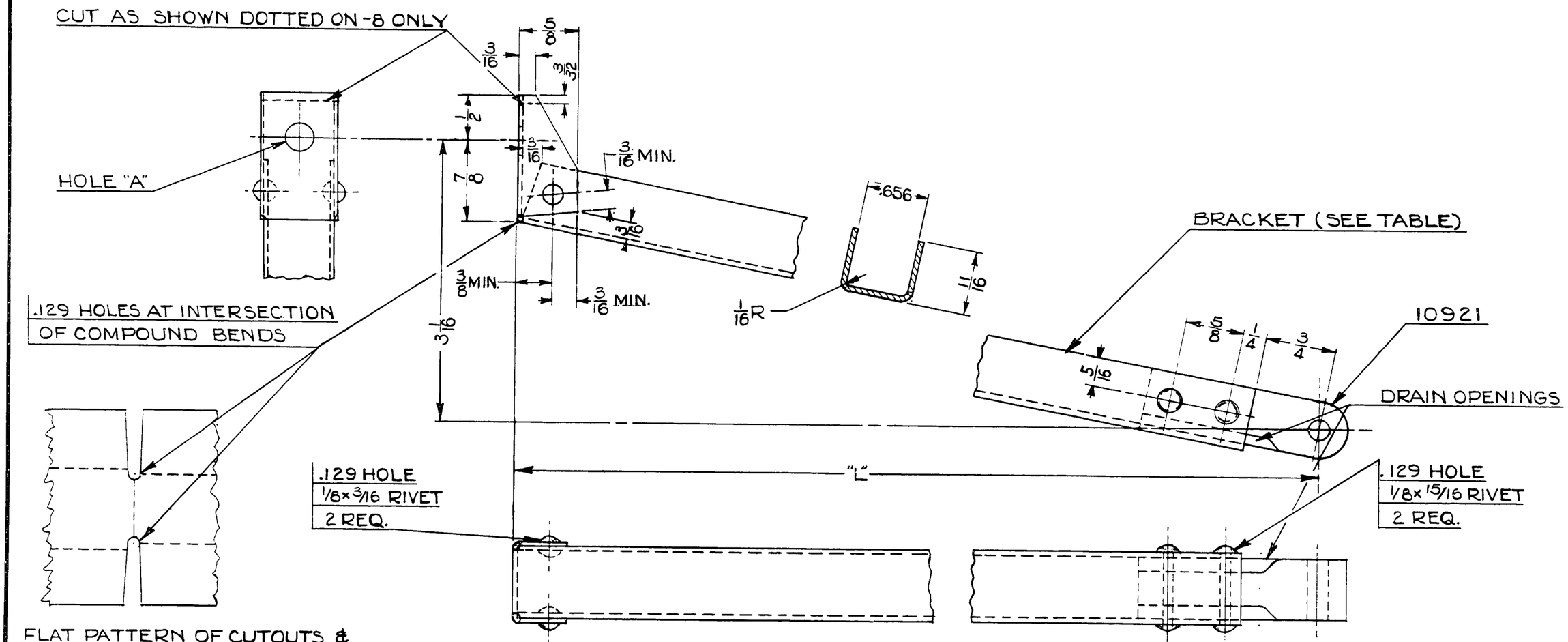

FLAT PATTERN OF CUTOUTS & RELIEF HOLES

ASSY. PART NO.	BRACKET PART NO.	"L"	HOLE "A"	REMARKS
10912-4	10912-2	12 5/16	.312 .315	
10912-5	10912-3	11 15/16	.190 .193	
10912-6	10912-7	12 15/32	.312 .315	
10912-8	10912-9	12 15/32	.312 .315	SAME AS -6 EXCEPT CUT AS SHOWN DOTTED

	2	1/8 x 15/16	RD. HD. SOFT STEEL RIVET
	2	1/8 x 3/16	
10921	1	BLOCK	
-9	1	.045 x 2 x 13 5/16	#1025 STEEL
-7		.045 x 2 x 13 5/16	
-3		.045 x 2 x 12 13/16	
-2		.045 x 2 x 13 1/8	
PART NO.	NO. REQ.	SIZE	DESCRIPTION
		MATERIAL	

THIS DRAWING IS THE PROPERTY OF THE PIPER AIRCRAFT CORP. AND ITS POSSESSION BY UNAUTHORIZED PERSONS SHALL NOT BE CONSTRUED AS PERMISSION TO REPRODUCE FOR SALE, IN WHOLE OR IN PART, ANY DEVICES SHOWN THEREON

LET.	REVISION	DATE	BY
Y	REDRAWN & REVISED	5-31-51	I.E.M.

MODEL	PER PLANE	NEXT ASSEMBLY	SUPERSEDES	SUP. BY

SCALE FULL SIZE — TOTAL WT.—LBS.

FINISH—PIPER SPECIFICATION #10

MANUFACTURING PRACTICES—PIPER SPECIFICATION #9

BRACKET ASSEMBLY- AILERON LONG HINGE

PIPER AIRCRAFT CORP.
LOCK HAVEN, PENNA.

DRAFTSMAN	CHECKER	STANDARDS
I.E.M. 5-31-51	H.R.K. 6-6-51	

10912

453

A453

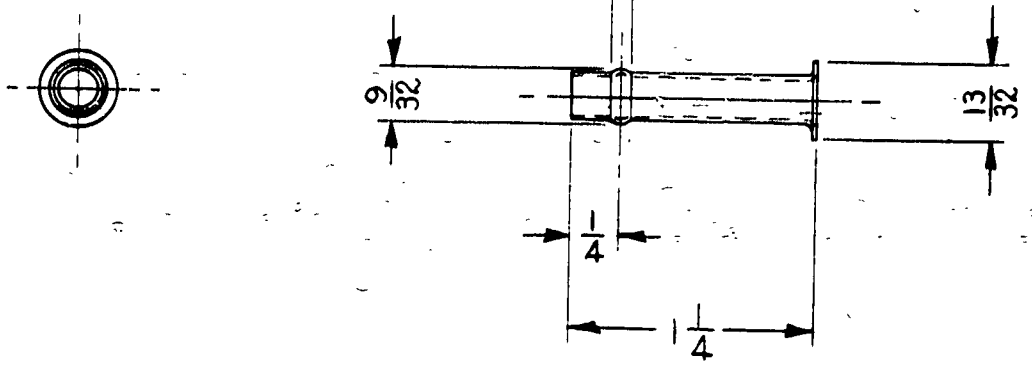

		1/4 x .032 x 1 3/8	3S-0 ALUM. TUBE
PART No.	No. REQ.	SIZE	DESCRIPTION
		MATERIAL	

SCALE FULL SIZE — TOTAL WT.–LBS.

FINISH–PIPER SPECIFICATION #10

MANUFACTURING PRACTICES–PIPER SPECIFICATION #9

CONNECTOR–HOSE

MODEL	PER PLANE	NEXT ASSEMBLY	SUPERSEDES	SUP. BY

THIS DRAWING IS THE PROPERTY OF THE PIPER AIRCRAFT CORP. AND ITS POSSESSION BY UNAUTHORIZED PERSONS SHALL NOT BE CONSTRUED AS PERMISSION TO REPRODUCE FOR SALE, IN WHOLE OR IN PART, ANY DEVICES SHOWN THEREON.

LET.	REVISION	DATE	BY
B	REDRAWN & REVISED	6-7-50	C.K.

PIPER AIRCRAFT CORP.
LOCK HAVEN, PENNA.

DRAFTSMAN	CHECKER	STANDARDS
C. E. K. 6-7-50	H. R. K. 6-8-50	

10914

54

A53

MODEL	PER SHIP	NEXT ASSY.
J3, L-4A, L-4B, TG-8	6	10912
J4, J5, J5C, J50, HE-1	6	10912 12482
L-14	6	10912 12482

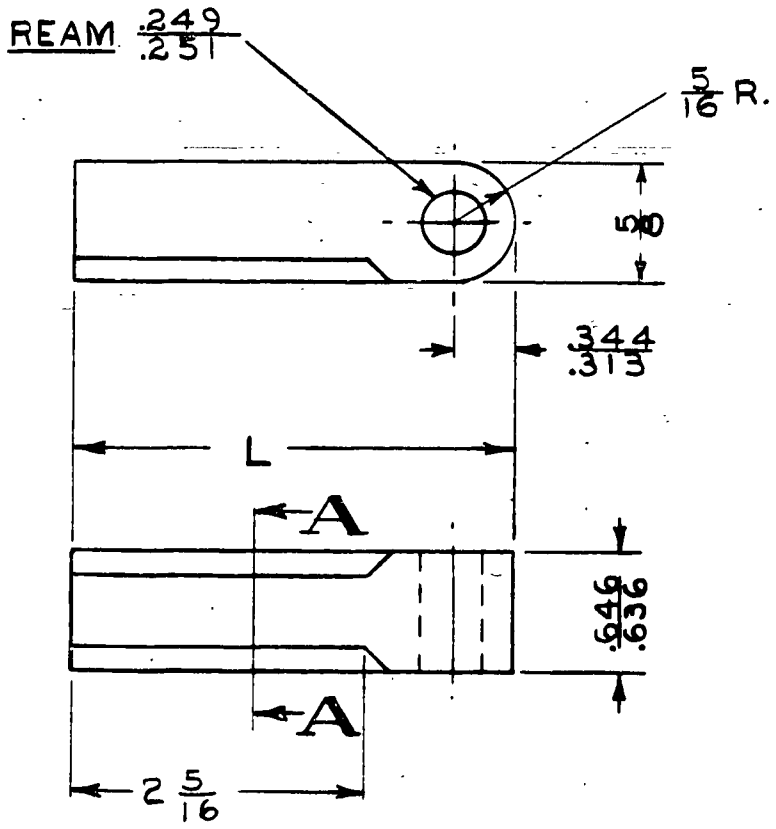

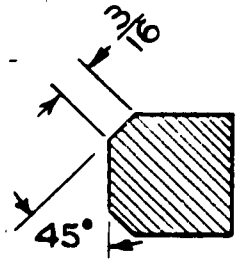

SECTION A-A

PART NO.	L.
10921	2 1/4
10921-2	3 1/16

LET.	REVISION	DATE	BY
K	-2 & TABLE ADDED	2-7-51	L.M.M.
J	REDRAWN & REVISED	6-14-45	M.G.S.

MODEL	PER PLANE	NEXT ASSEMBLY	SUPERSEDES	SUP. BY
NOTED	NOTED	NOTED		

PIPER AIRCRAFT CORP.
LOCK HAVEN, PENNA.

PART No.	No. REQ.	SIZE	DESCRIPTION
		NOTED	61ST ALUM.
		MATERIAL	

SCALE FULL SIZE — TOTAL WT.—LBS.

FINISH—PIPER SPECIFICATION #10

MANUFACTURING PRACTICES—PIPER SPECIFICATION #9

BLOCK—AILERON HINGE BEARING

DRAFTSMAN	CHECKER	STANDARDS
M.G.S. 6-14-45	L.E.K. 6-14-45	

10921

PENCILTEX A. & B. SMITH CO., PGH., PA.

54

A54

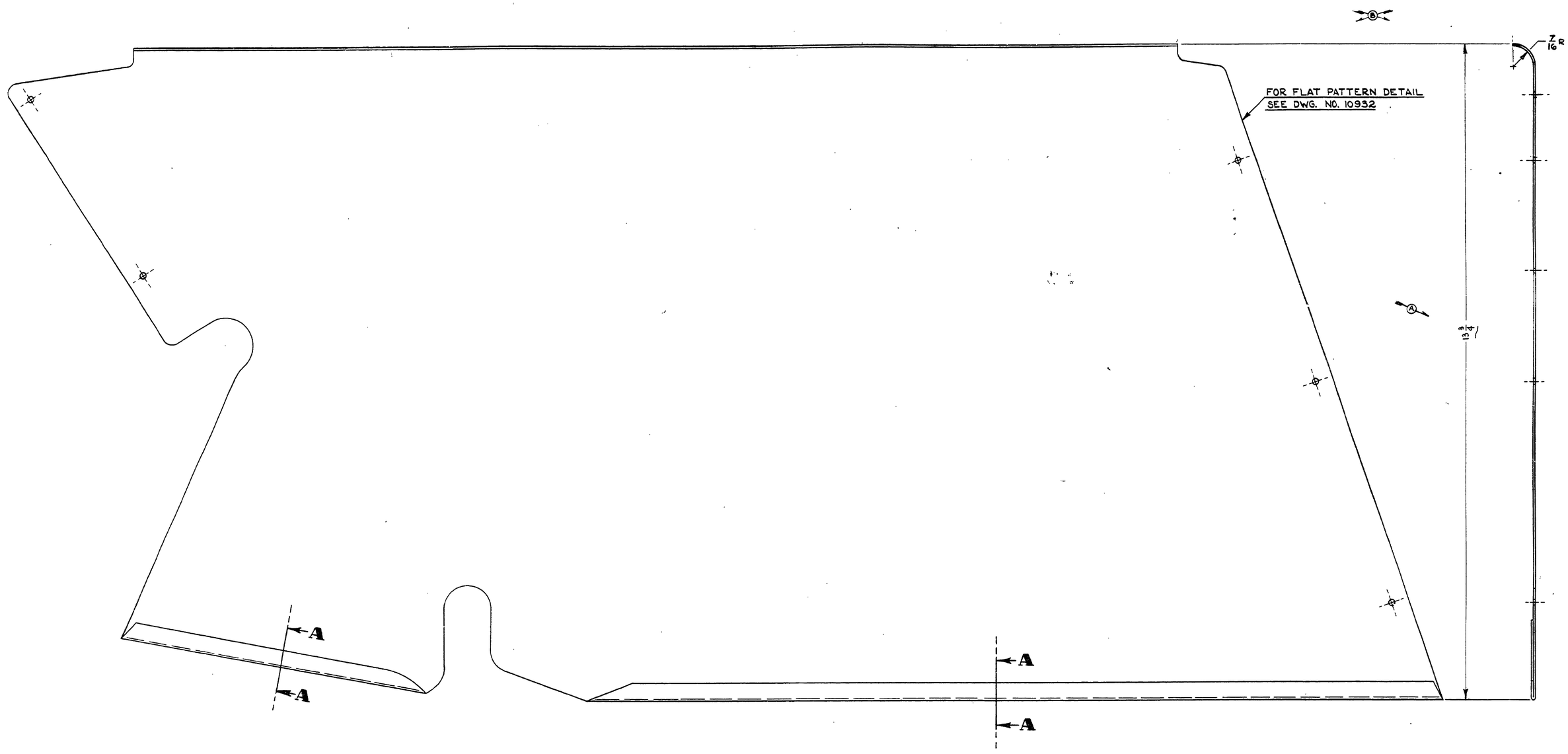

NOTE :
1. SPRAY NEAR SIDE WITH SOUND DEADENER
#A-31 PURCH. NOX-RUST CHEMICAL CORP.

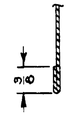

SECTION A-A

LET.	REVISION	DATE	BY
C	NOTE 1 ADDED	12-12-50	FCS
B	14 1/2 WAS 15 1/16 IN 3/8 & PART REV.	4-2-47	I.D.B.
A	15 3/4 WAS 14	2-21-47	L.R.

MODEL	PER PLANE	NEXT ASSEMBLY	SUPERSEDES	SUP. BY

THIS DRAWING IS THE PROPERTY OF THE PIPER AIRCRAFT CORP. AND ITS POSSESSION BY UNAUTHORIZED PERSONS SHALL NOT BE CONSTRUED AS PERMISSION TO REPRODUCE FOR SALE, IN WHOLE OR IN PART, ANY DEVICES SHOWN THEREON.

PIPER AIRCRAFT CORP.
LOCK HAVEN, PENNA.

PART No.	No. REQ.	MATERIAL
10932		PANEL (FLAT PATTERN)
		.020 × 14 1/2 × 31 — SIZE — 3S-1/2 H. ALUM. — DESCRIPTION

SCALE FULL SIZE — TOTAL WT.-LBS.
FINISH—PIPER SPECIFICATION #10
MANUFACTURING PRACTICES—PIPER SPECIFICATION #9

PANEL-COCKPIT RIGHT CENTER

DRAFTSMAN	CHECKER	STANDARDS
C. L. W. 11-14-46	R. D. M. 11-19-46	

10930

A838

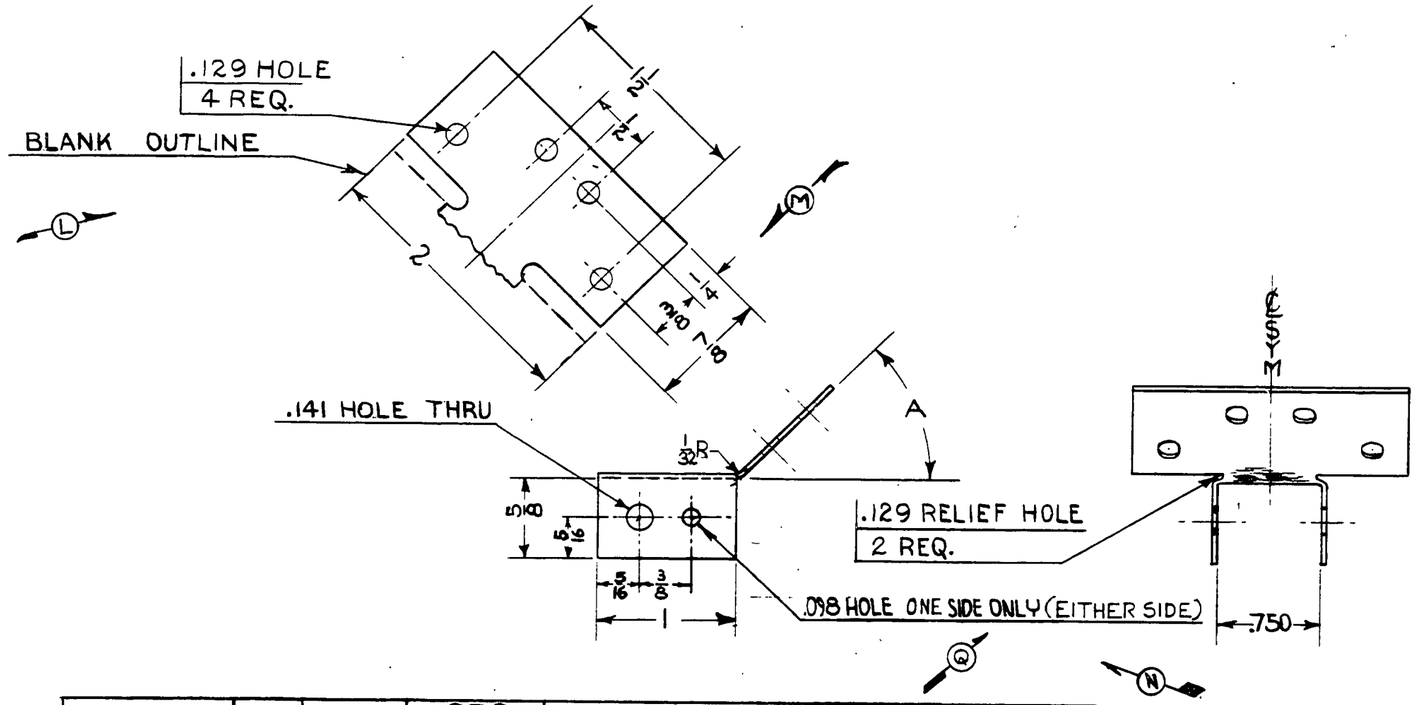

PART NO.	A	MODEL	PER PLANE	NEXT ASSY.	REMARKS
10931	47°	J5C	6	10716, 10717	
10931-2	77°	J-3	6	10703	SUPERSEDES 14531

LET.	REVISION	DATE	BY
Q	.098 HOLE NOTE REVISED	12-6-46	M.M.
P	J3 N.A. 10703 WAS 15556	6-20-46	BC
O	J5C N.A. 10716 & 10717 WAS 14766	6-17-46	BJC
N	.098 HOLE ADDED	3-28-46	L.D.
M	3/8 WAS 5/8	2-5-46	BC
L	VIEW REV. & 2 WAS 2 1/8	2-5-46	BC
K	REDRAWN & REVISED	1-24-46	BC

THIS DRAWING IS THE PROPERTY OF THE PIPER AIRCRAFT CORP. AND ITS POSSESSION BY UNAUTHORIZED PERSONS SHALL NOT BE CONSTRUED AS PERMISSION TO REPRODUCE FOR SALE, IN WHOLE OR IN PART, ANY DEVICES SHOWN THEREON

MODEL	PER PLANE	NEXT ASSEMBLY	SUPERSEDES	SUP. BY
NOTED	NOTED	NOTED		

PIPER AIRCRAFT CORP.
LOCK HAVEN, PENNA.

PART No.	No. REQ.	.032×2×2 SIZE	*1025 STEEL DESCRIPTION
		MATERIAL	
SCALE FULL SIZE		TOTAL WT.–LBS.	
FINISH–PIPER SPECIFICATION #10			
MANUFACTURING PRACTICES–PIPER SPECIFICATION #9			

CLAMP – AILERON HINGE BRACKET FALSE SPAR

DRAFTSMAN	CHECKER	STANDARDS
B.B.C. 1-24-46	E.E.T. 1-30-46	

10931

454

A454

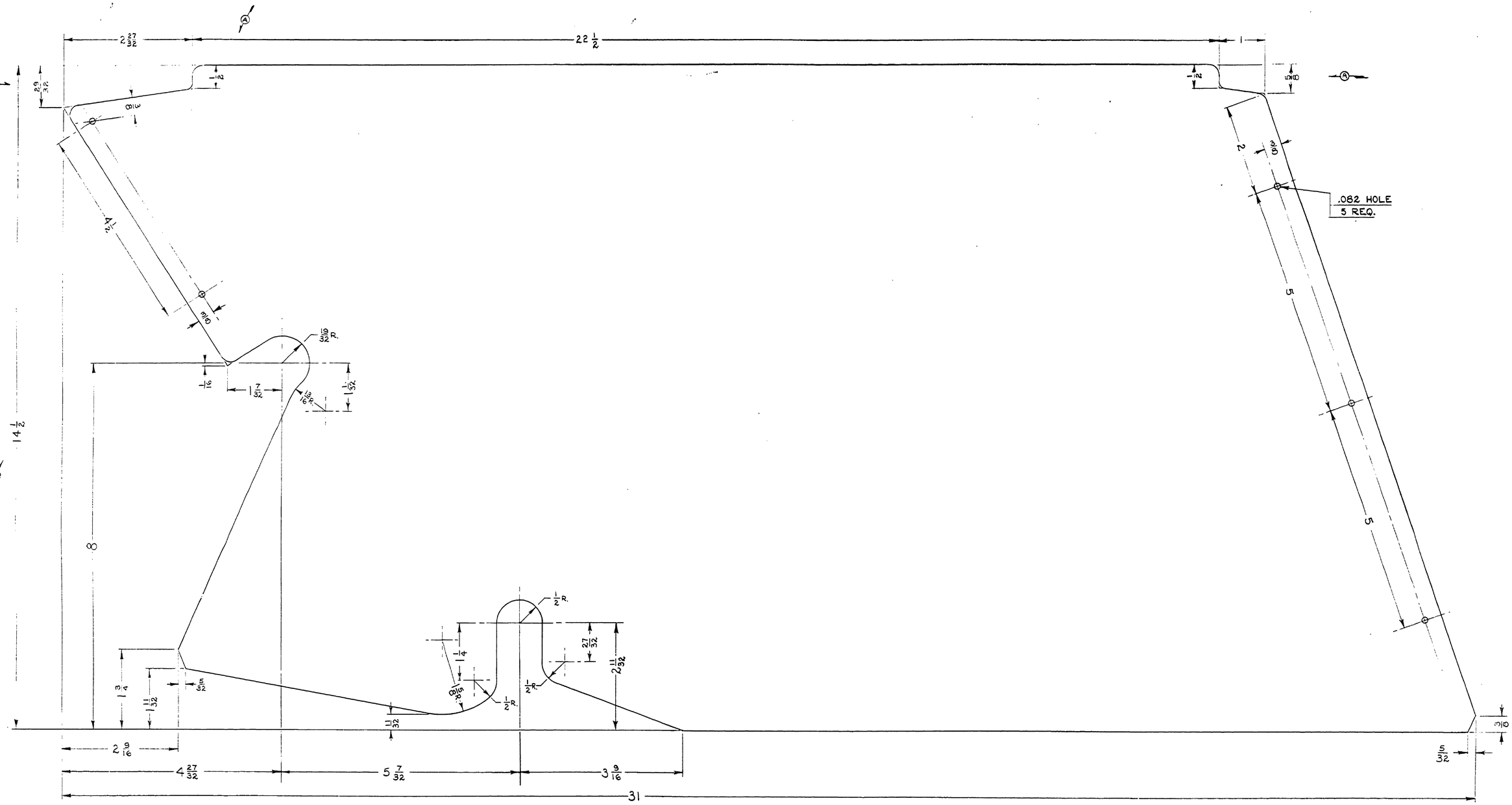

NOTE:
1. ALL OUTSIDE CORNERS MAY HAVE $\frac{7}{32}$ RADII & INSIDE CORNERS $\frac{5}{32}$ RADII UNLESS OTHERWISE NOTED.

LET.	REVISION	DATE	BY
A	14 1/2 WAS 15 7/16; 29/32 WAS 15/32; 1/2 WAS 1 1/16; 5/8 WAS 1 3/16	4-7-47	I.C.B.

MODEL | PER PLANE | NEXT ASSEMBLY | SUPERSEDES | SUP. BY

THIS DRAWING IS THE PROPERTY OF THE PIPER AIRCRAFT CORP. AND ITS POSSESSION BY UNAUTHORIZED PERSONS SHALL NOT BE CONSTRUED AS PERMISSION TO REPRODUCE FOR SALE, IN WHOLE OR IN PART, ANY DEVICES SHOWN THEREON.

PIPER AIRCRAFT CORP.
LOCK HAVEN, PENNA.

PART No. | NO. REQ. | MATERIAL
SCALE FULL SIZE | TOTAL WT.-LBS.
FINISH—PIPER SPECIFICATION #10
MANUFACTURING PRACTICES—PIPER SPECIFICATION #9

PANEL—COCKPIT RIGHT CENTER
(FLAT PATTERN)

DRAFTSMAN	CHECKER	STANDARDS
C. L. W. 11-13-46	R. D. M. 11-19-46	

10932

839

A839

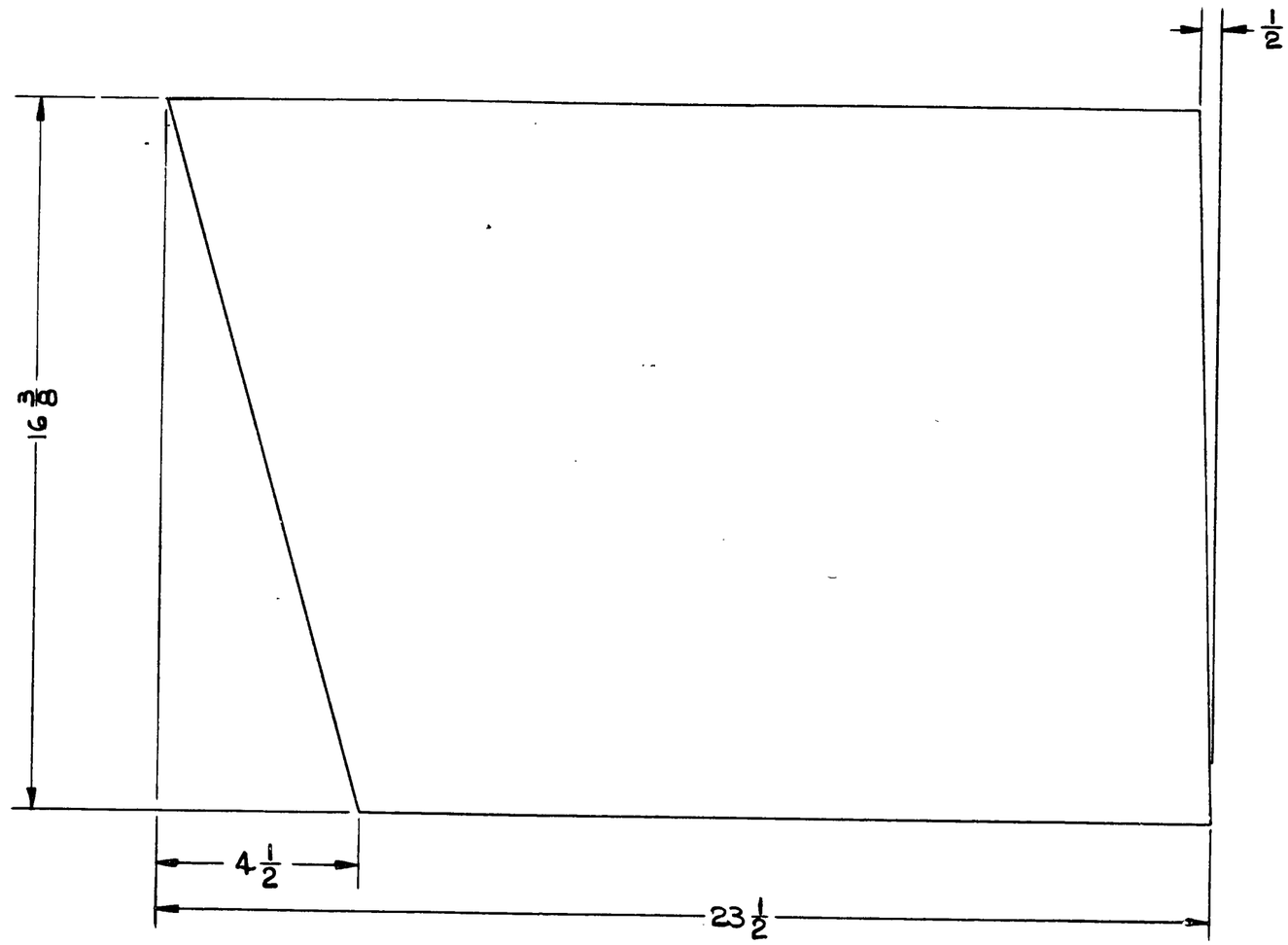

(A) 10933 L.H. SHOWN
10933-1 R.H. OPPOSITE

(B)

B	FIBERGLAS WAS KIMSUL	12-19-50	FCS
A	10933-1 ADDED	5-5-47	HMZ
LET.	REVISION	DATE	BY

THIS DRAWING IS THE PROPERTY OF THE PIPER AIRCRAFT CORP. AND ITS POSSESSION BY UNAUTHORIZED PERSONS SHALL NOT BE CONSTRUED AS PERMISSION TO REPRODUCE FOR SALE, IN WHOLE OR IN PART. ANY DEVICES SHOWN THEREON.

MODEL	PER PLANE	NEXT ASSEMBLY	SUPERSEDES	SUP. BY

PIPER AIRCRAFT CORP.
LOCK HAVEN, PENNA.

		1x16 3/8 x 23 1/2	FIBERGLAS PF-314 .5LB/CU.FT. PURCH. OWENS CORNING.
PART NO.	No. REQ.	SIZE	DESCRIPTION
			MATERIAL
SCALE 4 IN. = 1 FT.			TOTAL WT.—LBS.

FINISH—PIPER SPECIFICATION #10
MANUFACTURING PRACTICES—PIPER SPECIFICATION #9

BLANKET—FUSELAGE COWL INSULATOR

B.B.C.	R.D.M.		10933
11-22-46	11-22-46		
DRAFTSMAN	CHECKER	STANDARDS	

B B 455

A455

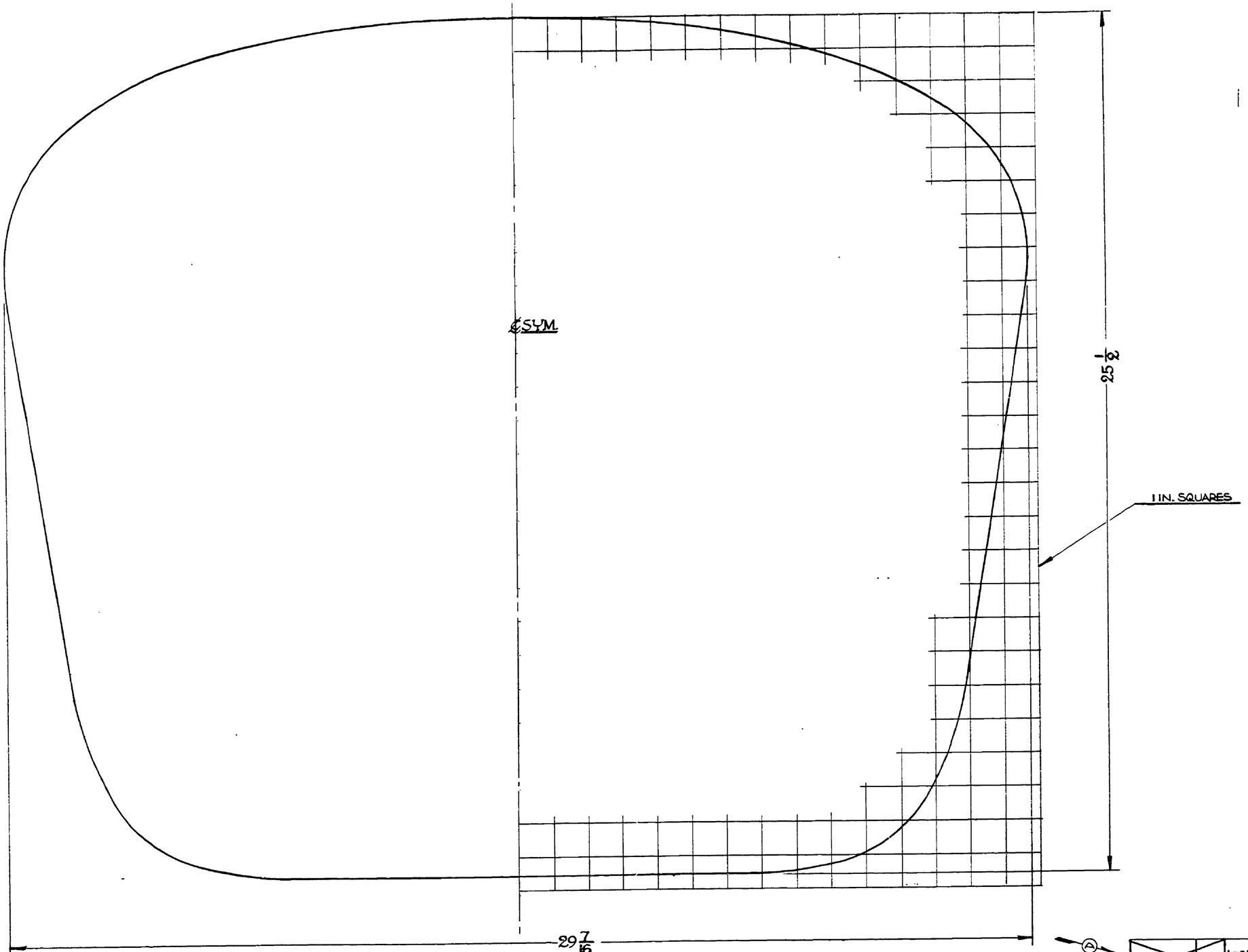

NOTE:
BLANKET CONTOUR 1/4 SMALLER
(ALL AROUND) THAN FIREWALL CONTOUR.

THIS DRAWING IS THE PROPERTY OF THE PIPER AIRCRAFT CORP. AND ITS POSSESSION BY UNAUTHORIZED PERSONS SHALL NOT BE CONSTRUED AS PERMISSION TO REPRODUCE FOR SALE, IN WHOLE OR IN PART, ANY DEVICES SHOWN THEREON

LET.	REVISION	DATE	BY
A	FIBERGLAS WAS KIMSUL	12-19-50	FCS

MODEL	PER PLANE	NEXT ASSEMBLY	SUPERSEDES	SUP. BY

PIPER AIRCRAFT CORP.
LOCK HAVEN, PENNA.

PART NO.	NO. REQ.	SIZE	DESCRIPTION
		1 x 25 1/2 x 29 7/16	FIBERGLAS PF-314 .5LB/CU.FT.
			PURCH. OWENS CORNING
			MATERIAL

SCALE 6 IN. = 1 FT. | TOTAL WT.—LBS.
FINISH—PIPER SPECIFICATION #10
MANUFACTURING PRACTICES—PIPER SPECIFICATION #9

BLANKET-FIREWALL INSULATOR

DRAFTSMAN	CHECKER	STANDARDS	
R.J.C. 11-22-46	R.D.M. 11-22-46		10934

A

717

A717

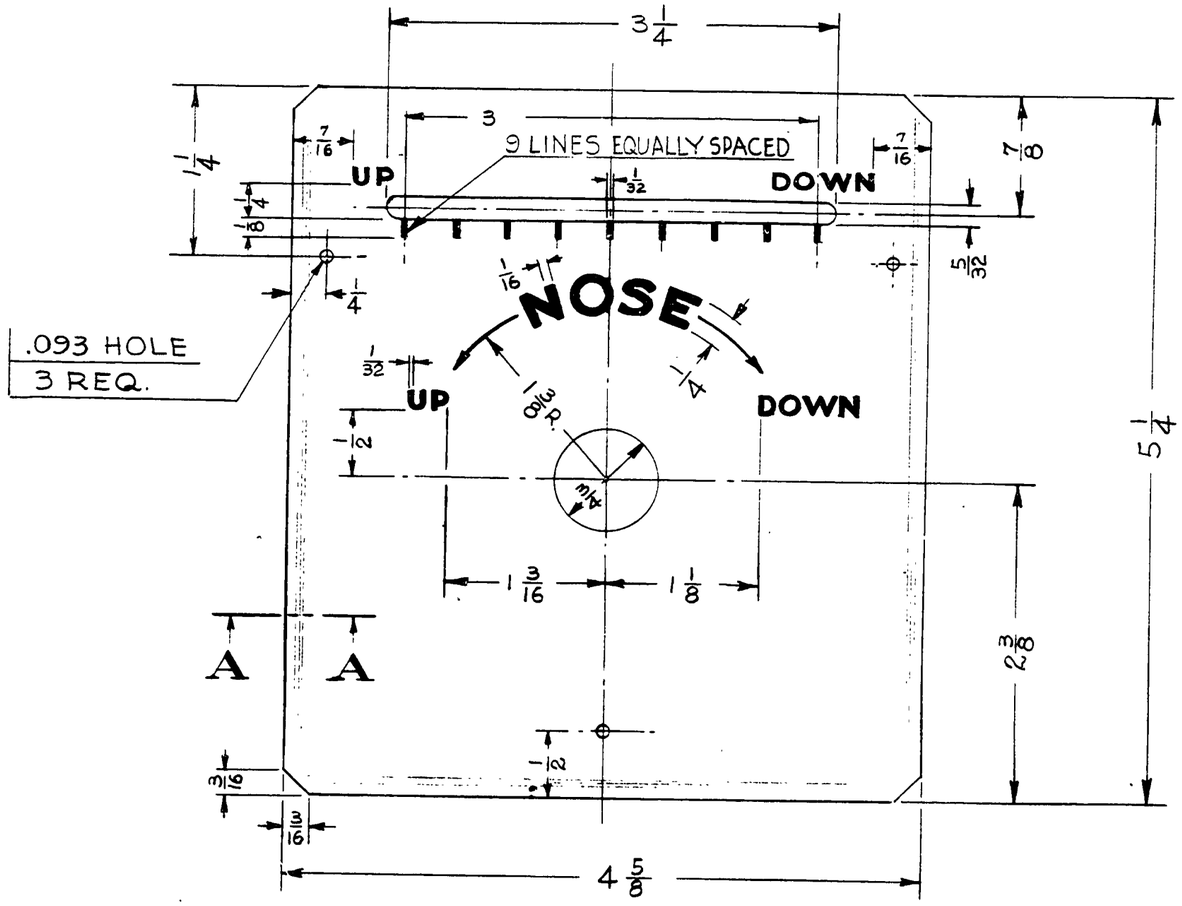

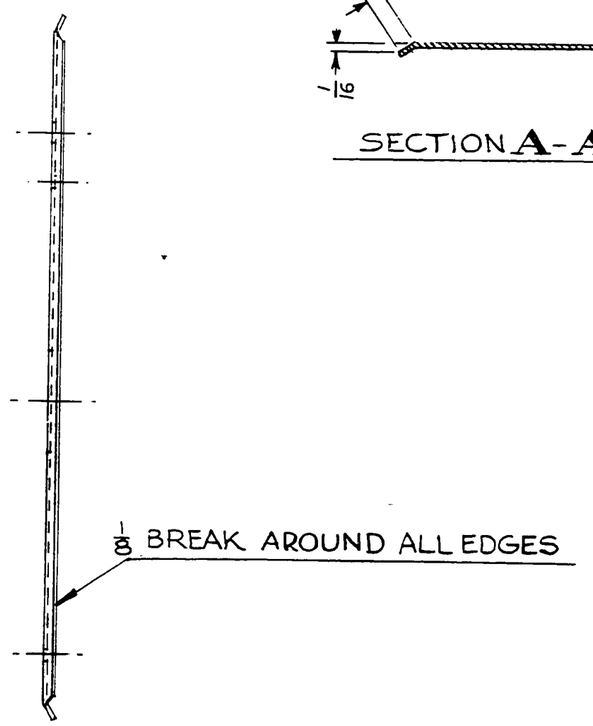

NOTES:

1. LETTERS 1/8 HIGH UNLESS OTHERWISE NOTED.
2. COLOR OF LETTERS - NAZ-DAR CO. LIGHT BLUE #807

THIS DRAWING IS THE PROPERTY OF THE PIPER AIRCRAFT CORP. AND ITS POSSESSION BY UNAUTHORIZED PERSONS SHALL NOT BE CONSTRUED AS PERMISSION TO REPRODUCE FOR SALE, IN WHOLE OR IN PART, ANY DEVICES SHOWN THEREON.

LET.	REVISION	DATE	BY

MODEL	PER PLANE	NEXT ASSEMBLY	SUPERSEDES	SUP. BY

PIPER AIRCRAFT CORP.
LOCK HAVEN, PENNA.

PART No.	No. REQ.	SIZE	MATERIAL
		.020 x 4 5/8 x 5 1/4	3S-1/2 H ALUM.

SCALE FULL SIZE — TOTAL WT.–LBS.

FINISH–PIPER SPECIFICATION #10

MANUFACTURING PRACTICES–PIPER SPECIFICATION #9

PLATE - STABILIZER INDICATOR COVER

DRAFTSMAN	CHECKER	STANDARDS
C.E.K. 11-29-46	J.E.H. 12-2-46	

10986

456

A456

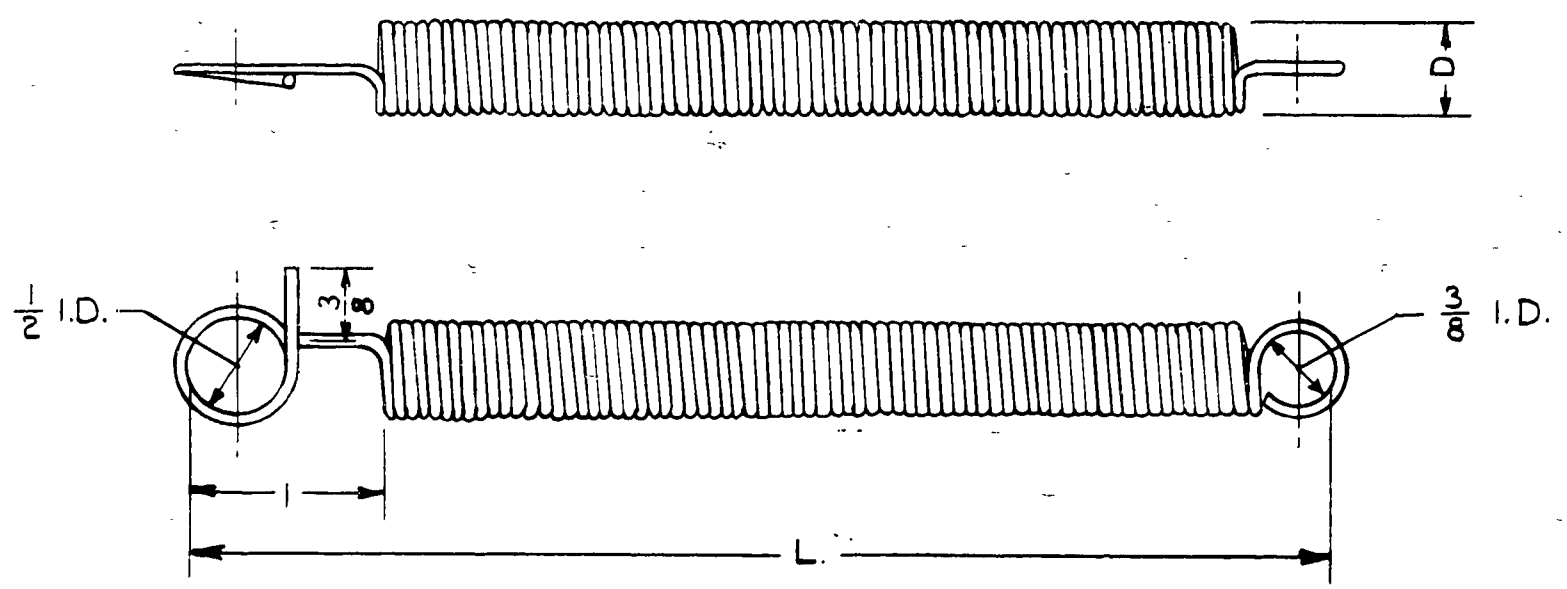

PART NO.	L	D	WIRE SIZE	REMARKS
10940	5 7/8	1/2	.065 DIA.	
10940-2	6 1/2	1/2	.085 DIA.	RATE-24 LB./IN.

LET	REVISION	DATE	BY
B	REDRAWN WITHOUT CHANGE	6-11-51	I.M.M.
A	TABLE & -2 ADDED	5-11-48	R.C.

MODEL	PER PLANE	NEXT ASSEMBLY	SUPERSEDES	SUP. BY

THIS DRAWING IS THE PROPERTY OF THE PIPER AIRCRAFT CORP. AND ITS POSSESSION BY UNAUTHORIZED PERSONS SHALL NOT BE CONSTRUED AS PERMISSION TO REPRODUCE FOR SALE IN WHOLE OR IN PART ANY DEVICES SHOWN THEREON.

PIPER AIRCRAFT CORP.
LOCK HAVEN, PENNA.

PART NO.	NO. REQ.	NOTED SIZE	MUSIC WIRE DESCRIPTION
			MATERIAL

SCALE FULL SIZE | TOTAL WT.—LBS.

FINISH—PIPER SPECIFICATION # 10

MANUFACTURING PRACTICES—PIPER SPECIFICATION # 9

SPRING - BUNGEE

DRAFTSMAN	CHECKER	STANDARDS	
I.D.B. 12-30-46	R.D.M. 12-30-46		**10940**

55

A55

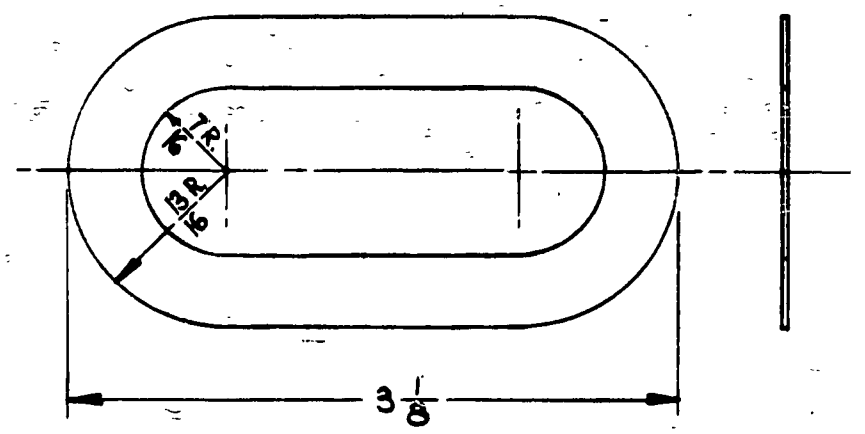

		.050 x 1 5/8 x 3 1/8	PYRALIN
PART No.	No. REQ.	SIZE	DESCRIPTION
		MATERIAL	
SCALE FULL SIZE		TOTAL WT.—LBS.	
FINISH—PIPER SPECIFICATION #10			
MANUFACTURING PRACTICES—PIPER SPECIFICATION #9			

GROMMET

THIS DRAWING IS THE PROPERTY OF THE PIPER AIRCRAFT CORP. AND ITS POSSESSION BY UNAUTHORIZED PERSONS SHALL NOT BE CONSTRUED AS PERMISSION TO REPRODUCE FOR SALE, IN WHOLE OR IN PART, ANY DEVICES SHOWN THEREON.

MODEL	PER PLANE	NEXT ASSEMBLY	SUPERSEDES	SUP. BY

LET.	REVISION	DATE	BY
A	.050 WAS .030	6-26-50	C.K.

PIPER AIRCRAFT CORP.
LOCK HAVEN, PENNA.

DRAFTSMAN	CHECKER	STANDARDS
L.R. 1-14-47	J.E.H. 1-15-47	

10984

PENCILTEX A. & M. SMITH CO., PGH., PA.

A 56

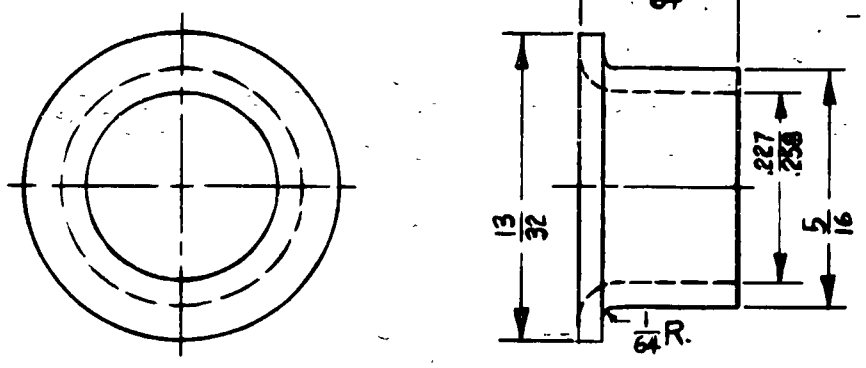



ACTUAL SIZE

THIS DRAWING IS THE PROPERTY OF THE PIPER AIRCRAFT CORP. AND ITS POSSESSION BY UNAUTHORIZED PERSONS SHALL NOT BE CONSTRUED AS PERMISSION TO REPRODUCE FOR SALE, IN WHOLE OR IN PART, ANY DEVICES SHOWN THEREON.

LET.	REVISION	DATE	BY

MODEL	PER PLANE	NEXT ASSEMBLY	SUPERSEDES	SUP. BY

PIPER AIRCRAFT CORP.
LOCK HAVEN, PENNA.

PART No.	No. REQ.	SIZE	DESCRIPTION
		5/16 O.D. x .227/.238 I.D. x 1/4 L.	*1025 STEEL TUBE
		MATERIAL	

SCALE 4 X SIZE & NOTED — TOTAL WT.—Lbs.

FINISH—PIPER SPECIFICATION #10

MANUFACTURING PRACTICES—PIPER SPECIFICATION #9

BUSHING-
CABLE ATTACHMENT

T.N.K.	R. D. M.		
1-14-47	1-14-47		
DRAFTSMAN	CHECKER	STANDARDS	

10985

PENCILTEX A. & B. SMITH CO., PGH., PA.

57

A57

A

A

SECTION A–A
FULL SIZE

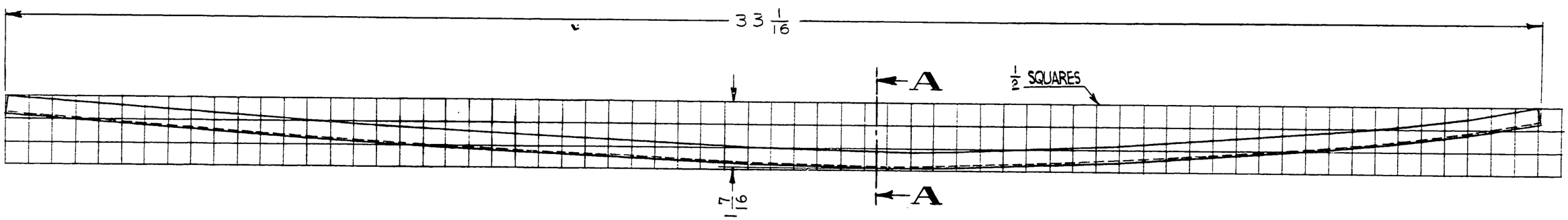

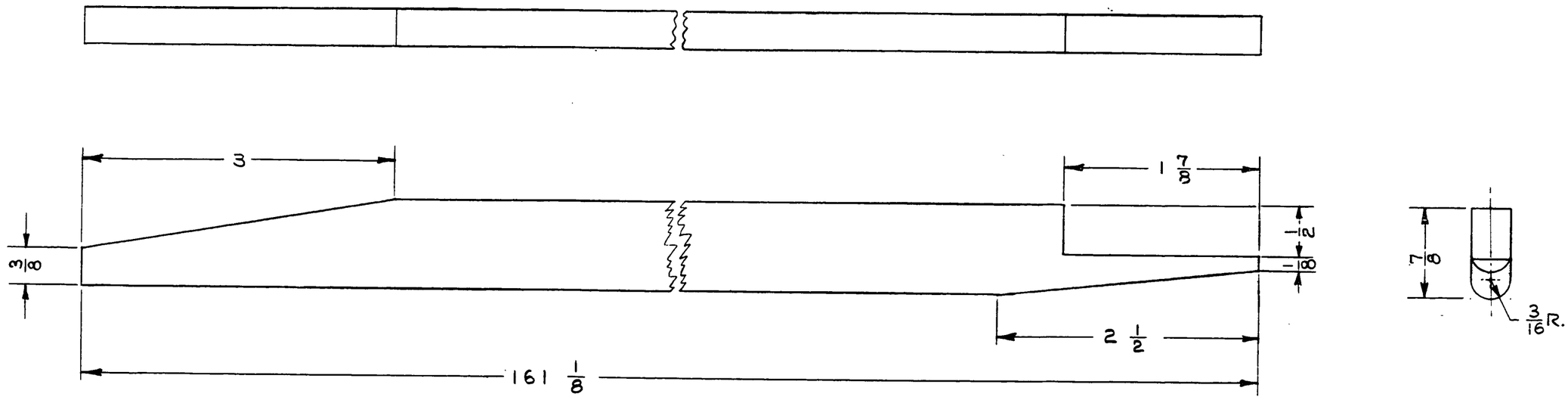

PART No.	No. REQ.	SIZE	DESCRIPTION
		3/8 × 7/8 × 161 1/8	SPRUCE OR WHITE PINE

MATERIAL

SCALE FULL SIZE — TOTAL WT.—LBS.

FINISH—PIPER SPECIFICATION #10

MANUFACTURING PRACTICES—PIPER SPECIFICATION #9

STRINGER—FUSELAGE BOTTOM

MODEL	PER PLANE	NEXT ASSEMBLY	SUPERSEDES	SUP. BY

LET.	REVISION	DATE	BY

THIS DRAWING IS THE PROPERTY OF THE PIPER AIRCRAFT CORP. AND ITS POSSESSION BY UNAUTHORIZED PERSONS SHALL NOT BE CONSTRUED AS PERMISSION TO REPRODUCE FOR SALE, IN WHOLE OR IN PART, ANY DEVICES SHOWN THEREON.

PIPER AIRCRAFT CORP.
LOCK HAVEN, PENNA.

DRAFTSMAN	CHECKER	STANDARDS
I. M. M. 2-7-47	R. D. M. 2-10-47	

10998

455

A458

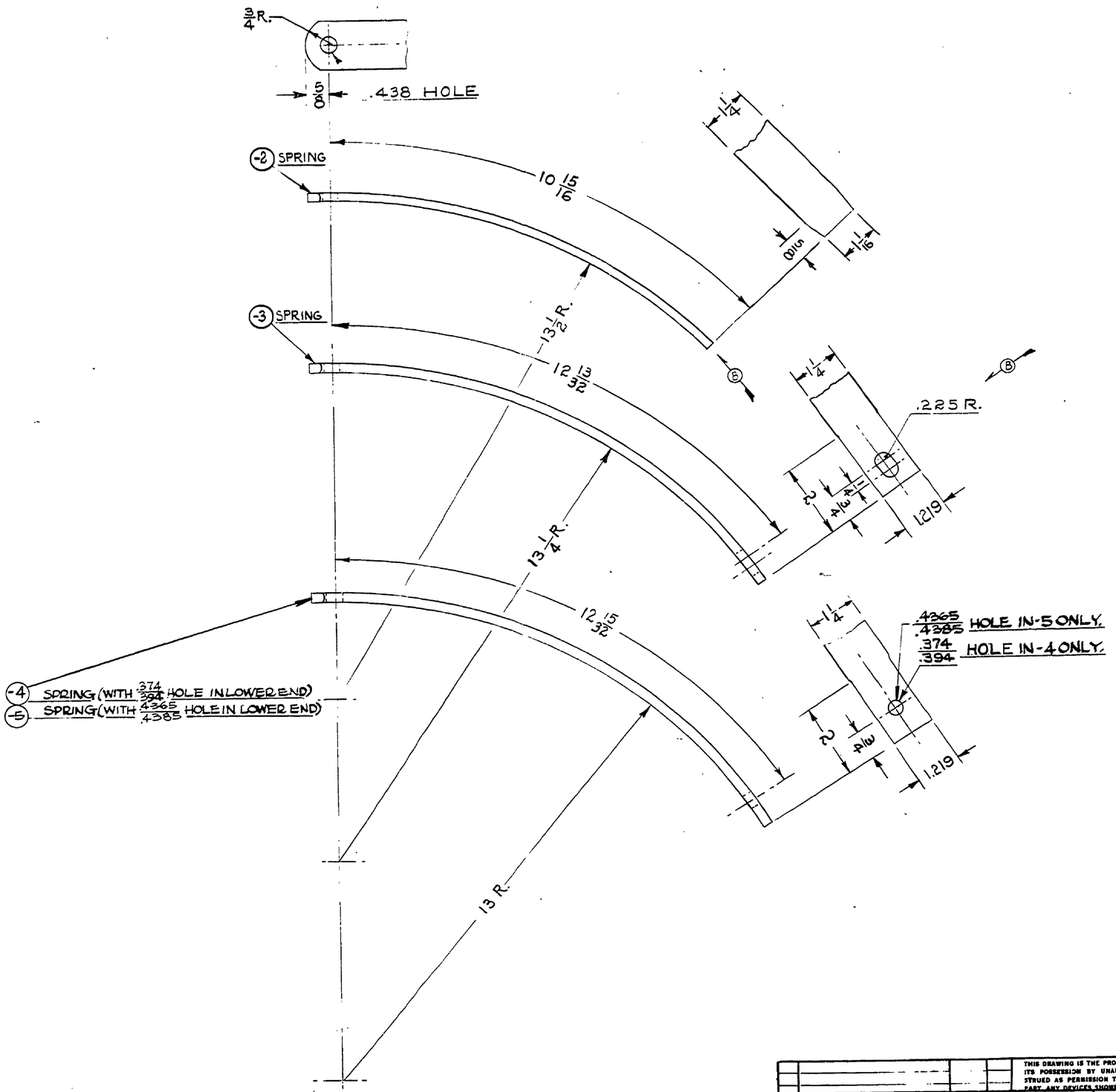

-5	—	.250×1¼×13 27/32	SPRING STEEL ROCKWELL "C" SCALE READING 39 TO 47
-4	—	.250×1¼×13 23/32	
-3	—	.250×1¼×13 25/32	
-2	—	.250×1¼×11 9/16	
PART NO.	NO. REQ.	SIZE	DESCRIPTION
SCALE 6 IN. = 1 FT.		MATERIAL	TOTAL WT.—LBS.

FINISH—PIPER SPECIFICATION #10

MANUFACTURING PRACTICES—PIPER SPECIFICATION #9

SPRING - TAIL WHEEL

THIS DRAWING IS THE PROPERTY OF THE PIPER AIRCRAFT CORP. AND ITS POSSESSION BY UNAUTHORIZED PERSONS SHALL NOT BE CONSTRUED AS PERMISSION TO REPRODUCE FOR SALE, IN WHOLE OR IN PART, ANY DEVICES SHOWN THEREON.

LET.	REVISION	DATE	BY
C	MATL. SPEC. WS 175000 MIN. TENS. STR.	8-19-48	JCP
B	.225 R. WAS .203; TAPER REM.	8-11-48	HRK
A	-5 ADDED	5-14-48	JCP

MODEL	PER PLANE	NEXT ASSEMBLY	SUPERSEDES	SUP. BY

PIPER AIRCRAFT CORP.
LOCK HAVEN, PENNA.

I. D. B	R. D. M.		
2-11-47	2-13-47		10999
DRAFTSMAN	CHECKER	STANDARDS	

718

AZ18

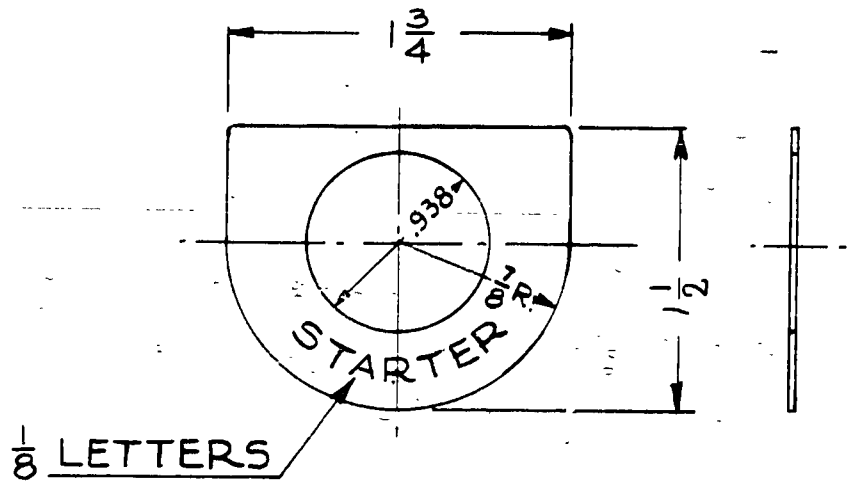

NOTE:
WHITE LETTERS ON BLACK BACKGROUND.

PART No.	No. REQ.	SIZE	DESCRIPTION
		.032 × 1 1/2 × 1 3/4	3S-1/2 H. ALUM.

MATERIAL

SCALE FULL SIZE | TOTAL WT.—LBS.

FINISH—PIPER SPECIFICATION #10

MANUFACTURING PRACTICES—PIPER SPECIFICATION #9

PLACARD - STARTER

LET.	REVISION	DATE	BY

THIS DRAWING IS THE PROPERTY OF THE PIPER AIRCRAFT CORP. AND ITS POSSESSION BY UNAUTHORIZED PERSONS SHALL NOT BE CONSTRUED AS PERMISSION TO REPRODUCE FOR SALE, IN WHOLE OR IN PART, ANY DEVICES SHOWN THEREON.

MODEL	PER PLANE	NEXT ASSEMBLY	SUPERSEDES	SUP. BY

PIPER AIRCRAFT CORP.
LOCK HAVEN, PENNA.

DRAFTSMAN	CHECKER	STANDARDS
C.E.K. 3-10-47	R.D.M. 3-12-47	

11015

PENCILTEX A. & B. SMITH CO., PGH., PA.

59

A58

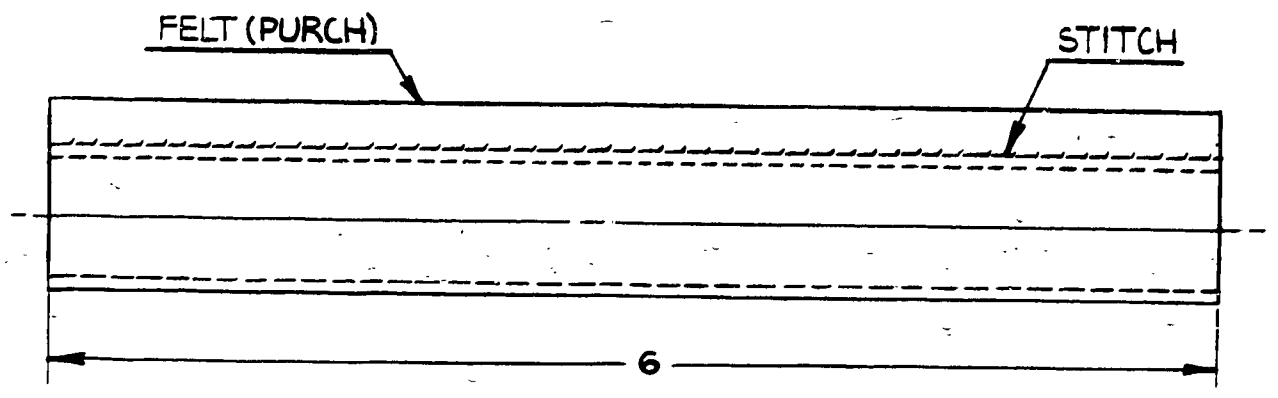

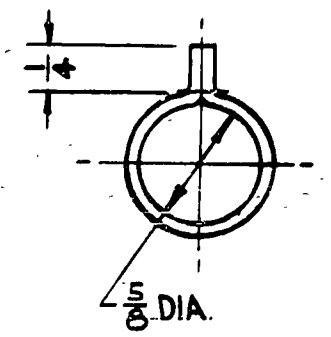

	1	24 L.	#20-4 SILK FINISH BLACK THREAD
	1	2 5/16 × 6 L.	#2 FELT (PURCH.) N.Y. & PA. CO. (LOCK HAVEN PAPER MILL)
PART No.	No. REQ.	SIZE	DESCRIPTION
			MATERIAL

SCALE FULL SIZE — TOTAL WT.—LBS.

FINISH—PIPER SPECIFICATION #10

MANUFACTURING PRACTICES—PIPER SPECIFICATION #9

COVER ASSEMBLY - DRAG BRACE TUBE

THIS DRAWING IS THE PROPERTY OF THE PIPER AIRCRAFT CORP. AND ITS POSSESSION BY UNAUTHORIZED PERSONS SHALL NOT BE CONSTRUED AS PERMISSION TO REPRODUCE FOR SALE, IN WHOLE OR IN PART, ANY DEVICES SHOWN THEREON.

MODEL	PER PLANE	NEXT ASSEMBLY	SUPERSEDES	SUP. BY

LET.	REVISION	DATE	BY

PIPER AIRCRAFT CORP.
LOCK HAVEN, PENNA.

L.R.	R.D.M.	
3-25-47	3-26-47	
DRAFTSMAN	CHECKER	STANDARDS

11034

PENCILTEX A. & B. SMITH CO., PGH., PA.

54

A59

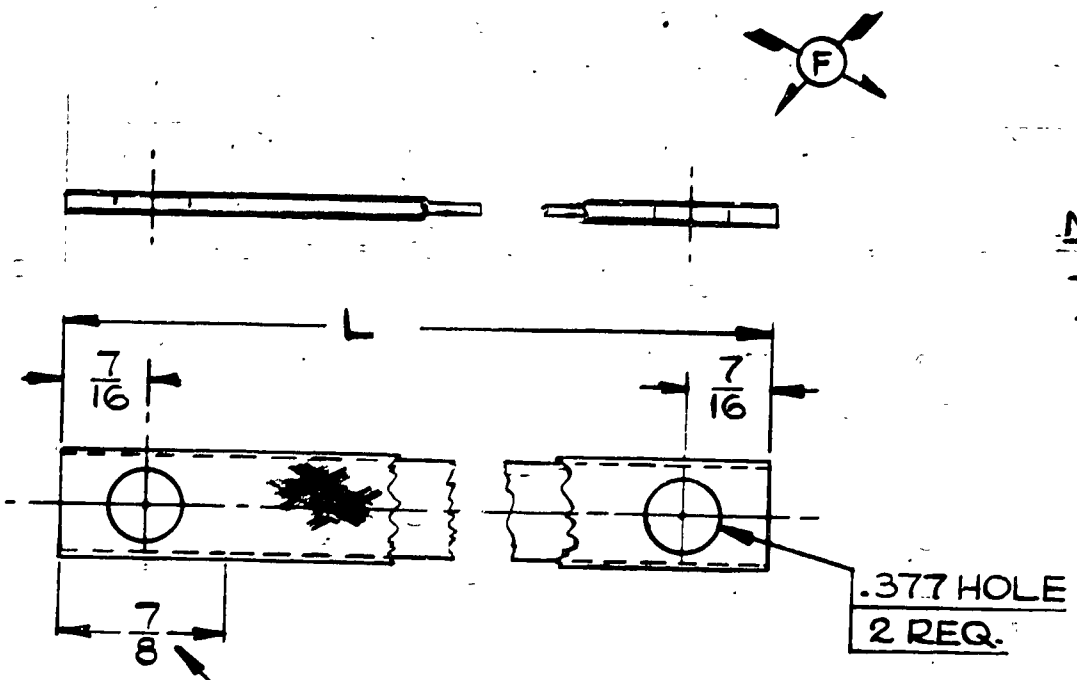

NOTE: PART CONSISTS OF TWO IDENTICAL PIECES ONE INSIDE THE OTHER.

PART NO.	L
11122	10
11122-2	8
11122-3	8 5/8

LET.	REVISION	DATE	BY
E	VIEW REVISED & NOTE ADDED	6-28-51	C.E.B.
E	-3 ADDED	3-16-49	C.E.K.
D	-2 ADDED	2-1-49	DC
C	10 WAS 6 5/8	4-30-48	HRK
B	6 5/8 WAS 3 5/8	2-24-48	HRK
A	REDRAWN & REVISED	9-17-47	RC

THIS DRAWING IS THE PROPERTY OF THE PIPER AIRCRAFT CORP. AND ITS POSSESSION BY UNAUTHORIZED PERSONS SHALL NOT BE CONSTRUED AS PERMISSION TO REPRODUCE FOR SALE, IN WHOLE OR IN PART, ANY DEVICES SHOWN THEREON.

MODEL	PER PLANE	NEXT ASSEMBLY	SUPERSEDES	SUP. BY

PIPER AIRCRAFT CORP.
LOCK HAVEN, PENNA.

PART No.	No. REQ.	SIZE	DESCRIPTION
	2	NOTED	SHIELDING #692 D PURCH PACKARD DIV. GEN'L. MOTORS
			MATERIAL

SCALE FULL SIZE — TOTAL WT.—LBS.

FINISH—PIPER SPECIFICATION #10

MANUFACTURING PRACTICES—PIPER SPECIFICATION #9

CABLE ASSEMBLY— BATTERY GROUND

DRAFTSMAN	CHECKER	STANDARDS
RJC 9-17-47	L.E.K. 9-19-47	

11122

PENCILTEX A. & B. SMITH CO., PGH., PA.

A 60

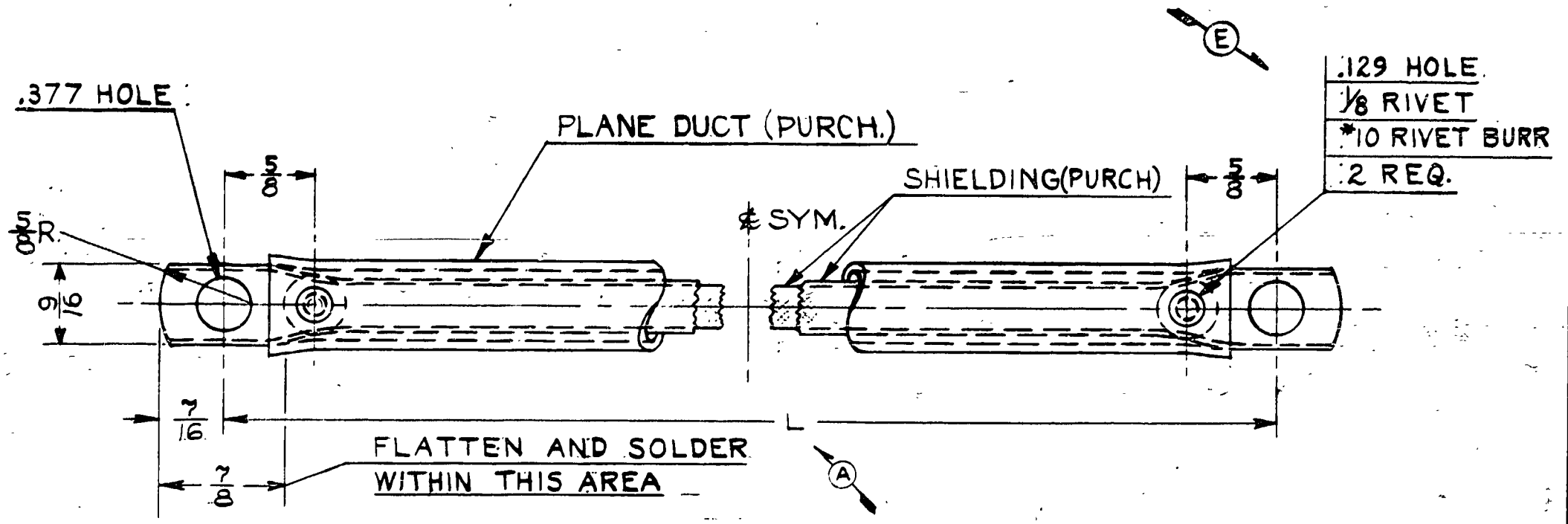

PART NO.	L
11134	8
11134-2	18
11134-3	24
11134-4	4½
11134-5	110
11134-6	19⅜

PART NO.	L
11134-7	140
11134-8	13

*10	2	RIVET BURR	
	2	⅛ × 5/16	2S ALUM BR. HD. RIVET
	1	½ I.D. × NOTED	PLANE DUCT TYPE SP PURCH. GRAYBAR ELECT. CO.
	2	NOTED	SHIELDING *692D PURCH. GEN'L. MOTOR CORP., PACKARD DIV.
PART No.	No. REQ.	SIZE	DESCRIPTION
		MATERIAL	

SCALE FULL SIZE — TOTAL WT.—LBS.

FINISH—PIPER SPECIFICATION #10

MANUFACTURING PRACTICES—PIPER SPECIFICATION #9

THIS DRAWING IS THE PROPERTY OF THE PIPER AIRCRAFT CORP. AND ITS POSSESSION BY UNAUTHORIZED PERSONS SHALL NOT BE CONSTRUED AS PERMISSION TO REPRODUCE FOR SALE, IN WHOLE OR IN PART, ANY DEVICES SHOWN THEREON.

LET.	REVISION	DATE	BY
G	-8 ADDED	3-1-51	I.M.M.
F	-7 ADDED	1-9-51	HRK
E	-6 RIVET & RIVET BURR ADD.	6-23-50	C.K.
D	-4 & -5 ADDED	3-7-49	RM.
C	-3 ADDED	2-1-49	DC
B	-2 ADDED	7-27-48	R.M.
A	8 WAS 15	9-15-47	RM.

MODEL	PER PLANE	NEXT ASSEMBLY	SUPERSEDES	SUP. BY

PIPER AIRCRAFT CORP.
LOCK HAVEN, PENNA.

CABLE ASSEMBLY — BATTERY

DRAFTSMAN	CHECKER	STANDARDS
H.R.K. 6-30-47	C.E.K. 7-10-47	

11134

PENCILTEX A. & S. SMITH CO., PGH., PA.

A 61

WAS 1154
D1131-A

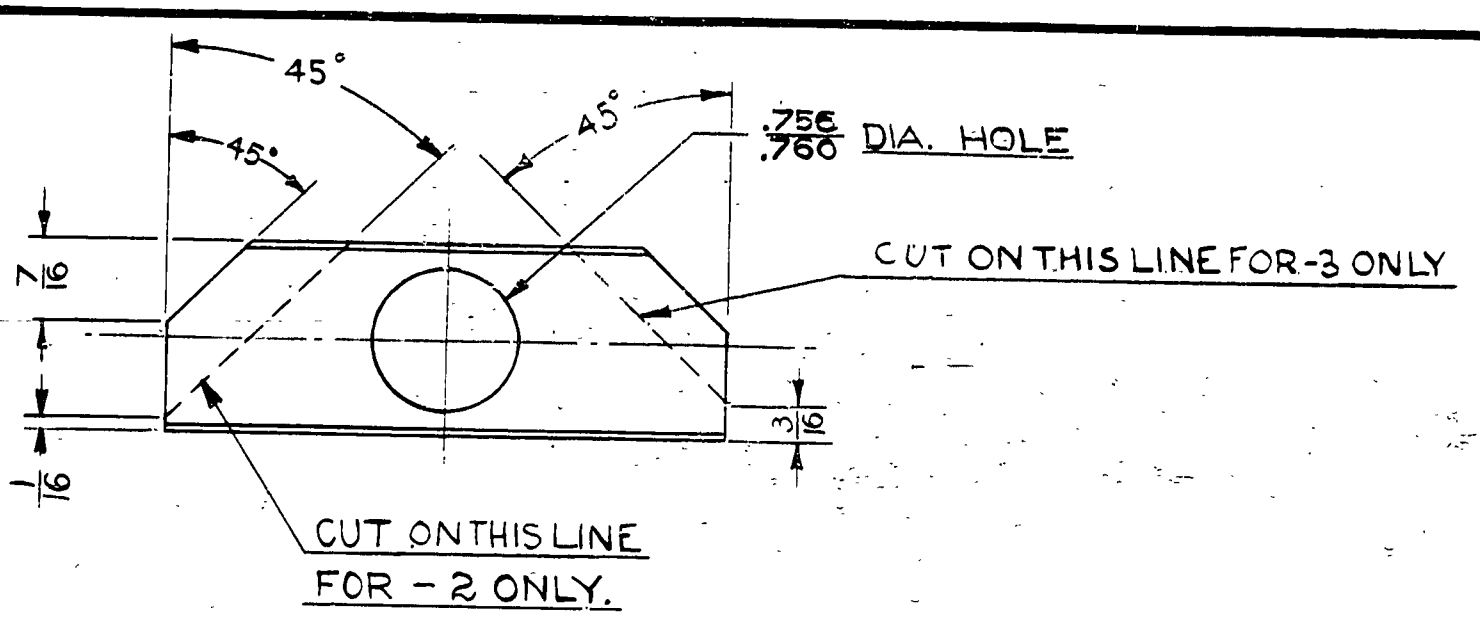

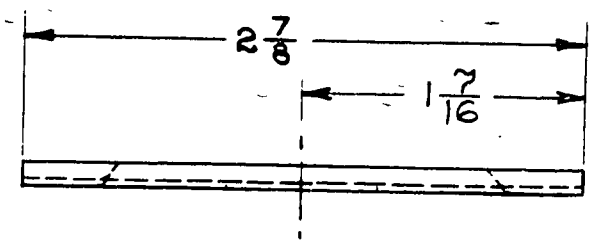

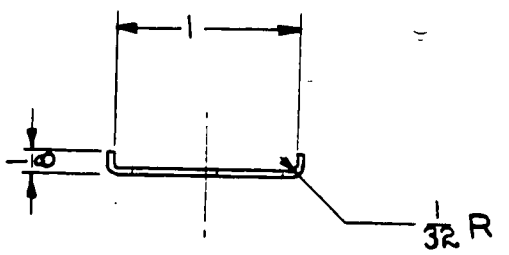

11141 AS SHOWN

11141-2 SAME AS 11141 EXCEPT CUT AS NOTED

11141-3 SAME AS 11141 EXCEPT CUT AS NOTED

LET.	REVISION	DATE	BY
M	-3 ADDED	12-9-49	K.D
L	-2 ADDED	1-22-48	HRK
K	J5C N.A. 10227 WAS 10672	12-4-45	LEK
J	J5C NA. 10108 WAS 10652	12-4-45	LEK
H	J5C N.A. 10642 REMOVED	11-30-45	I.D.B
G	J5C NA. 10672 WAS 10227	10-31-45	LEK
F	J5C NA. 10652 WAS 10108	10-31-45	LEK
E	J5C N.A. 10227 WAS 10672	10-19-45	R.E.S.
D	J5C N.A. 10108 WAS 10652	10-5-45	H.R.K.
C	L-14 MODEL REF. ADDED	3-19-45	E.L.N.
B	REDRAWN & REVISED	7-29-44	A-1-N

MODEL	PER PLANE	NEXT ASSEMBLY	SUPERSEDES	SUP. BY
L-14	4	10462, 10463, 10465		
J5C	10	10108, 10227, 10692, 10732		

PIPER AIRCRAFT CORP.
LOCK HAVEN, PENNA.

PART No.	No. REQ.	SIZE	DESCRIPTION
		.025 × 1 1/4 × 2 7/8	3S-1/2 H. ALUMINUM
		MATERIAL	

SCALE FULL SIZE — TOTAL WT.—LBS.

FINISH—PIPER SPECIFICATION #10

MANUFACTURING PRACTICES—PIPER SPECIFICATION #9

PLATE—WING RIB FAIRLEAD BRACKET

DRAFTSMAN	CHECKER	STANDARDS
A-1-NOVOSEL 7-29-44	R.E.T. 8-1-44	

11141

PENCILTEX A. B. B. SMITH CO., PGH., PA.

A 622

WAS 1155 / D1132-A

H

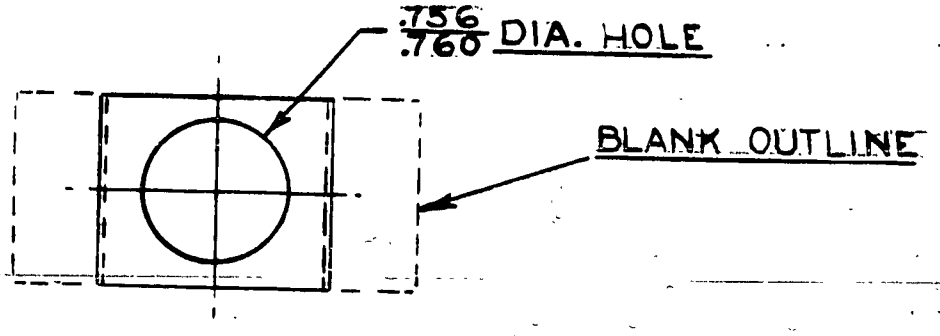

PART NO.	A
11151	7/16
11151-2	23/32

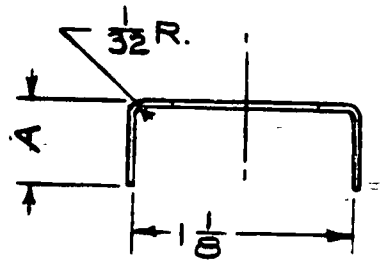



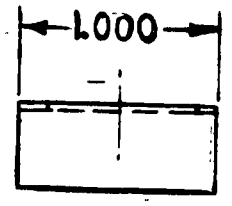





LET.	REVISION	DATE	BY.
K	-2 ADDED	4-26-49	C.K.
J	1.000 WAS .980	4-23-47	J.H.
H	REM. 5 R (REF.) & 1/32 DIM.	4-23-47	J.H.
G	.032 WAS .030	10-1-46	J.M.M.
F	1/4 X 1/16 CORNER CUT-OFF REMOVED	3-13-46	HMZ
E	REDRAWN & REVISED	6-14-45	M.G.S.

PENCILTEX A. G. S. SMITH CO., PHIL., PA.

MODEL	PER PLANE	NEXT ASSEMBLY	SUPERSEDES	SUP. BY
L-14	6	90405 90404		
J5J6C	10	40151		
RE-NSC	10	40151		
J4	2	11092, 11112		
J5	4	11082		
	2	11078		

PIPER AIRCRAFT CORP.
LOCK HAVEN, PENNA.

PART No.	No. REQ.	SIZE	DESCRIPTION
		.032 x 1 x NOTED	61S-T ALUM.
		MATERIAL	

SCALE FULL SIZE — TOTAL WT.—LBS.

FINISH—PIPER SPECIFICATION #10

MANUFACTURING PRACTICES—PIPER SPECIFICATION #0

PLATE - WING RIB
FAIRLEAD BRACKET U

M.G.S.	L.E.K.		11151
6-14-45	6-14-45		
DRAFTSMAN	CHECKER	STANDARDS	

63

A 63

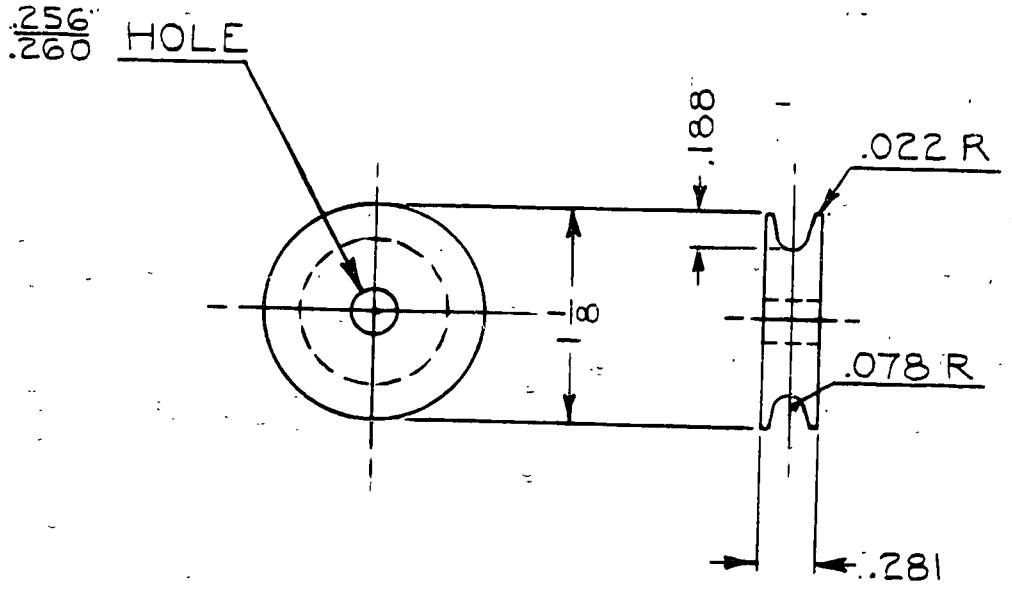

						9/32 × 1 1/8 DIA.	CANVAS BASE PHENOLIC
						SIZE	DESCRIPTION
					PART No.	No. REQ.	MATERIAL

THIS DRAWING IS THE PROPERTY OF THE PIPER AIRCRAFT CORP. AND ITS POSSESSION BY UNAUTHORIZED PERSONS SHALL NOT BE CONSTRUED AS PERMISSION TO REPRODUCE FOR SALE, IN WHOLE OR IN PART, ANY DEVICES SHOWN THEREON.

SCALE FULL SIZE — TOTAL WT.—LBS.

FINISH—PIPER SPECIFICATION #10

MANUFACTURING PRACTICES—PIPER SPECIFICATION #9

PULLEY

MODEL	PER PLANE	NEXT ASSEMBLY	SUPERSEDES	SUP. BY

LET.	REVISION	DATE	BY

PIPER AIRCRAFT CORP.
LOCK HAVEN, PENNA.

E. L. N.	R. D. M.	
5-7-47	5-7-47	
DRAFTSMAN	CHECKER	STANDARDS

11200

PENCILTEX A. & B. SMITH CO., PGH., PA.

64

A 64

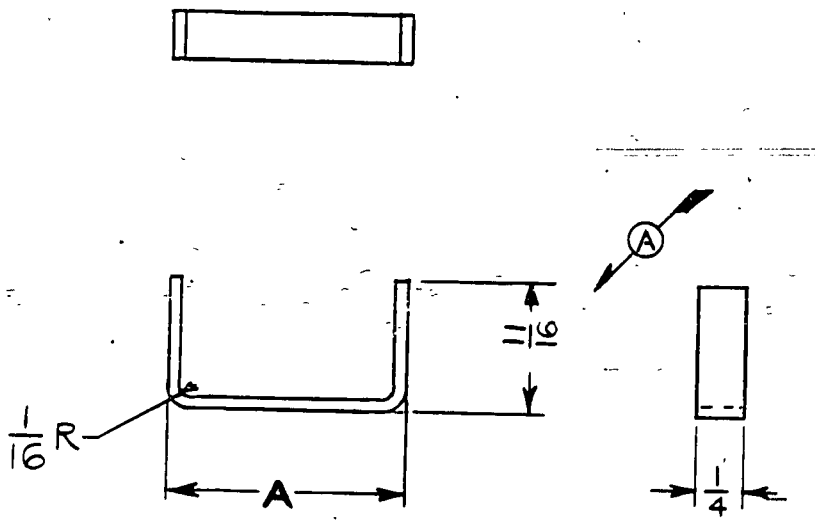

PART NO.	A	MATL.
11207	1	.062
11207-2	1 1/4	.062
11207-3	9/16	.045

THIS DRAWING IS THE PROPERTY OF THE PIPER AIRCRAFT CORP. AND ITS POSSESSION BY UNAUTHORIZED PERSONS SHALL NOT BE CONSTRUED AS PERMISSION TO REPRODUCE FOR SALE, IN WHOLE OR IN PART, ANY DEVICES SHOWN THEREON.

LET.	REVISION	DATE	BY
C	-3 ADDED	8-11-49	C.K.
B	-2 & TABLE ADDED	7-7-49	C.K.
A	I WAS 17/32 ; 11/16 WAS 13/16	10-24-47	H.K.

MODEL	PER PLANE	NEXT ASSEMBLY	SUPERSEDES	SUP. BY

PENCILTEX A. & B. SMITH CO., PGH., PA.

PIPER AIRCRAFT CORP.
LOCK HAVEN, PENNA.

PART No.	No. REQ.	SIZE	DESCRIPTION
		NOTED 1/4 x NOTED	1025 STEEL
		MATERIAL	

SCALE FULL SIZE — TOTAL WT.—LBS.

FINISH—PIPER SPECIFICATION #10

MANUFACTURING PRACTICES—PIPER SPECIFICATION #9

GUARD - CABLE

E. L. N.	R.J.C.		
5-12-47	5-14-47		11207
DRAFTSMAN	CHECKER	STANDARDS	

65

A 65

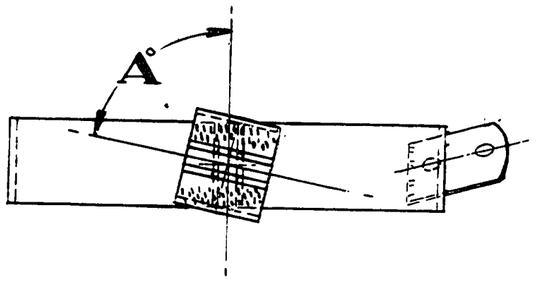

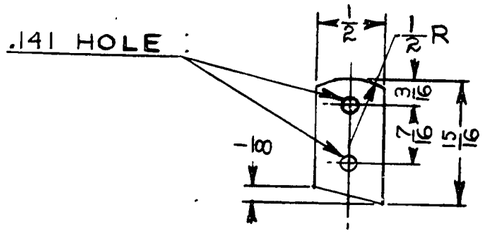

-5 DETAIL

PART NO.	A°
11299-2	79°
11299-3	38°
11299-4	38°

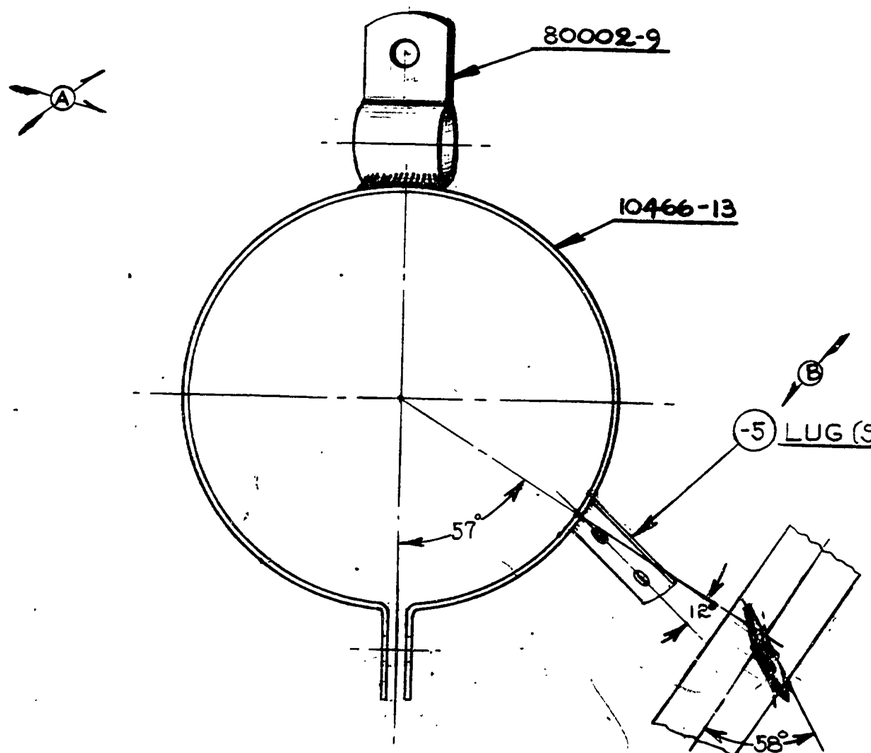

(B)

(-5) LUG (SEE DETAIL) (USED ON 11299-4 ONLY)

-5	1	.032 x 1/2 x 15/16	1025 STL (ON 11299-4 ONLY)
80002-9	1	CLAMP	
10466-13	1	CLAMP	
PART No.	No. REQ.	NAME / MATERIAL	

SCALE FULL SIZE — TOTAL WT.—LBS.

FINISH—PIPER SPECIFICATION #10

MANUFACTURING PRACTICES—PIPER SPECIFICATION #9

CLAMP ASSEMBLY

THIS DRAWING IS THE PROPERTY OF THE PIPER AIRCRAFT CORP. AND ITS POSSESSION BY UNAUTHORIZED PERSONS SHALL NOT BE CONSTRUED AS PERMISSION TO REPRODUCE FOR SALE, IN WHOLE OR IN PART, ANY DEVICES SHOWN THEREON.

LET.	REVISION	DATE	BY
B	-4-5 ADDED	5-16-47	RM
A	WELD REVISED	6-26-47	RC

MODEL	PER PLANE	NEXT ASSEMBLY	SUPERSEDES	SUP. BY

PIPER AIRCRAFT CORP.
LOCK HAVEN, PENNA.

DRAFTSMAN	CHECKER	STANDARDS
R.J.C. 6-17-47	C.E.K. 6-18-47	

11299

459

A459

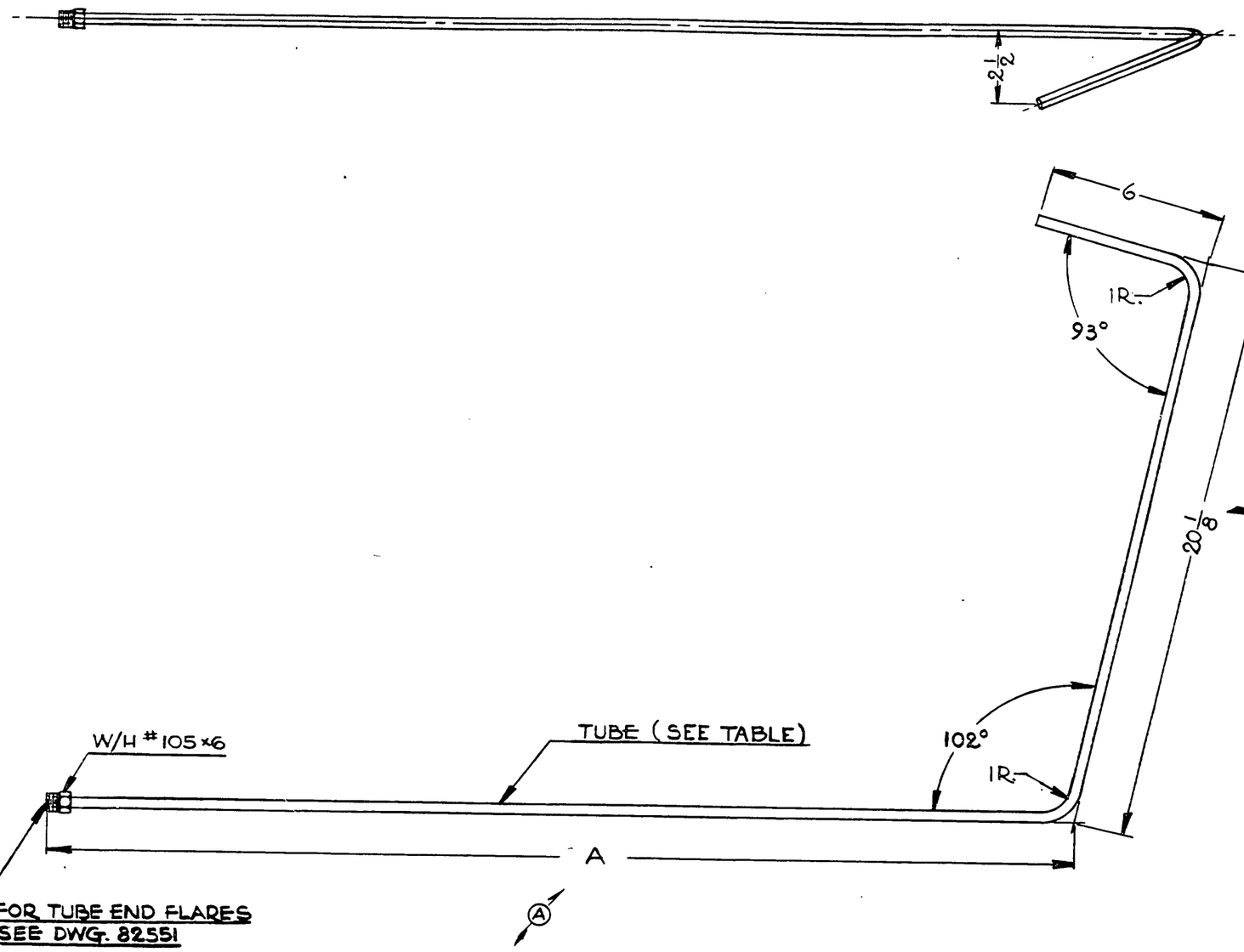

ASSY. NO.	TUBE NO.	A
11300	11300-2	35 3/8
11300-3	11300-4	42 3/4

PART NO.	NO. REQ.	SIZE	DESCRIPTION / MATERIAL
-4	1	3/8 x .032 x 68 7/8	3S-0 ALUM. TUBE (ON 11300-3 ONLY)
82551	DWG. REF. ONLY		TUBE END FLARES
	1	W/H # 105 x 6	INVERTED TUBE NUT
-2	1	3/8 x .032 x 61 1/2	3S-0 ALUM. TUBE (ON 11300 ONLY)

SCALE 3 IN. = 1 FT. — TOTAL WT.—LBS.

FINISH—PIPER SPECIFICATION #10

MANUFACTURING PRACTICES—PIPER SPECIFICATION #9

LINE ASSEMBLY - FUEL

LET.	REVISION	DATE	BY
B	-3, -4 & TABLE ADDED	2-16-50	HRK
A	35 3/8 WAS 35	6-26-50	RC

MODEL	PER PLANE	NEXT ASSEMBLY	SUPERSEDES	SUP. BY

PIPER AIRCRAFT CORP.
LOCK HAVEN, PENNA.

DRAFTSMAN	CHECKER	STANDARDS
R.J.C. 6-17-47	R.D.M. 6-18-47	

11300

THIS DRAWING IS THE PROPERTY OF THE PIPER AIRCRAFT CORP. AND ITS POSSESSION BY UNAUTHORIZED PERSONS SHALL NOT BE CONSTRUED AS PERMISSION TO REPRODUCE FOR SALE, IN WHOLE OR IN PART. ANY DEVICES SHOWN THEREON.

460

A460

WAS 1102 / D10688-A

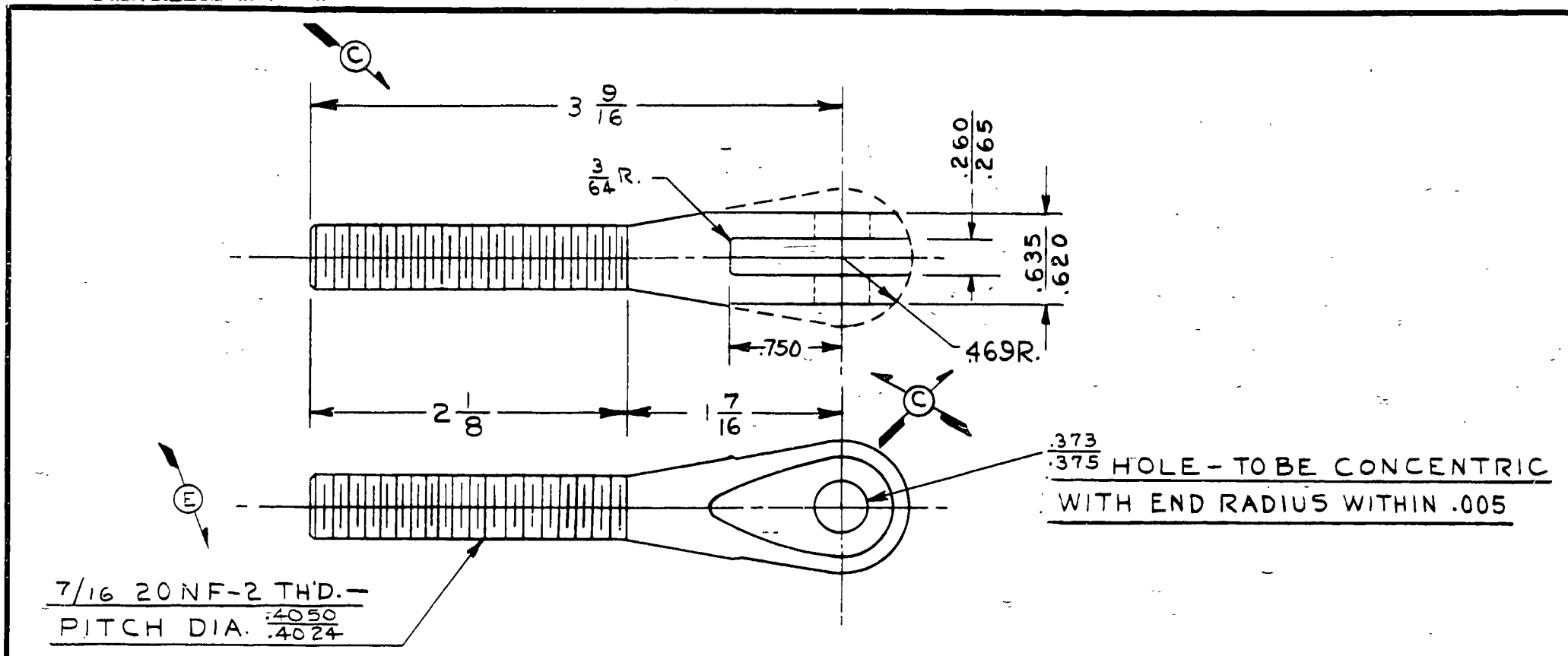

MATERIAL — #2330 STEEL OR #4130
STEEL — U.T.S. 90,000 P.S.I. —
CADMIUM PLATED TO AN-SPEC. (B)
AN-QQ-P-421, ALTERNATE MATERIAL AN-S-14 (D)

LET	REVISION	DATE	BY
F	REDRAWN WITHOUT CHANGE	6-12-51	I.M.M.
E	20NF-2 WAS 20 NF-3	1-9-47	C.E.K.
D	L-14 MODEL REF. ADDED	6-13-45	J.B.M.
C	NOTE REMOVED, DIMS. REVISED	8-26-43	L.R.
B	ALT. MATL. ADDED	10-7-42	R.T.M.
A	WAS 2330 H.T. STL. 125000 P.S.I.	10-5-42	C.E.K.

MODEL	PER PLANE	NEXT ASSEMBLY	SUPERSEDES	SUP. BY
L-14	4	14481		
HE-1	4	14481		
J3C, J5C	4	14481		
L5	4	14481		

THIS DRAWING IS THE PROPERTY OF THE PIPER AIRCRAFT CORP. AND ITS POSSESSION BY UNAUTHORIZED PERSONS SHALL NOT BE CONSTRUED AS PERMISSION TO REPRODUCE FOR SALE IN WHOLE OR IN PART ANY DEVICES SHOWN THEREON.

PIPER AIRCRAFT CORP.
LOCK HAVEN, PENNA.

NOTED

PART NO. | NO. REQ. | MATERIAL

SCALE FULL SIZE | TOTAL WT.—LBS.

FINISH—PIPER SPECIFICATION # 10

MANUFACTURING PRACTICES—PIPER SPECIFICATION # 9

FORK — LIFT STRUT

DRAFTSMAN	CHECKER	STANDARDS
W.N.EMERY 9-29-41	R.C.M. 10-10-41	

11321

66



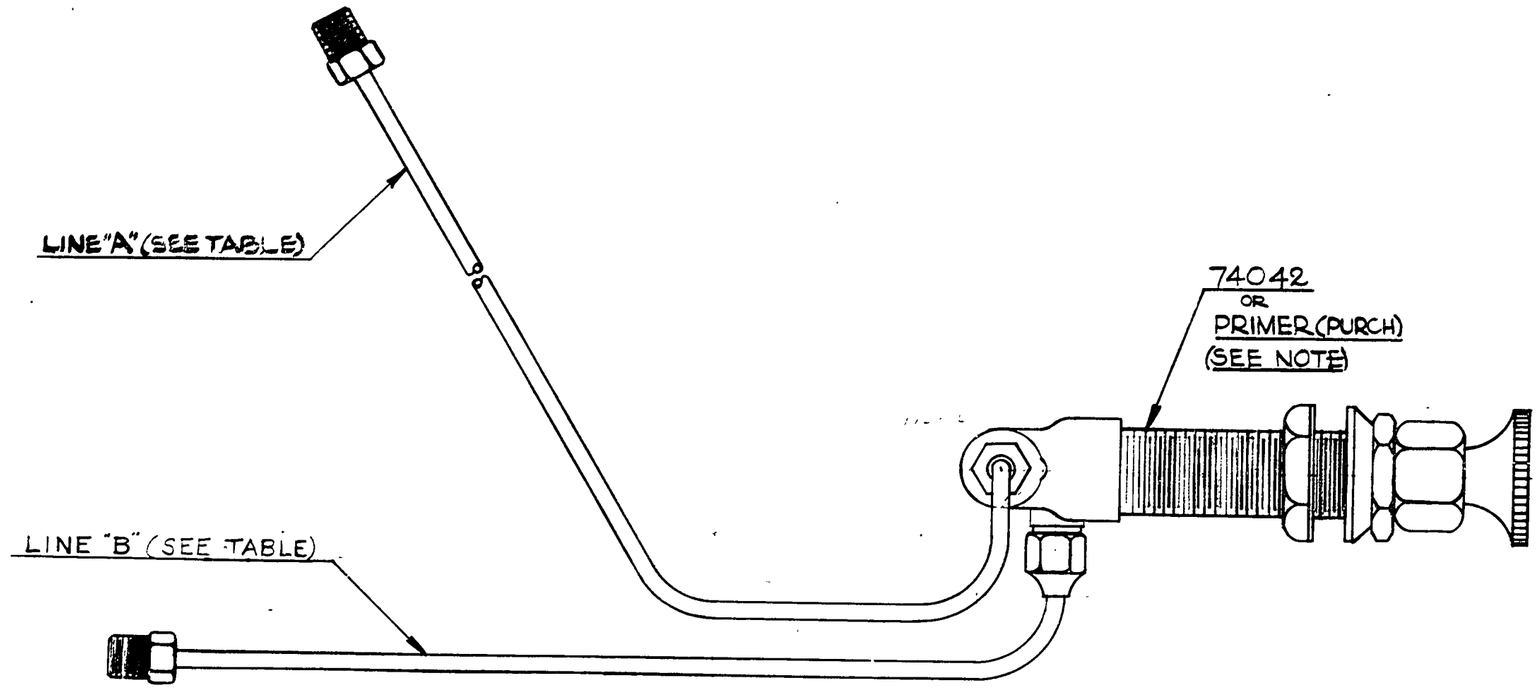

NOTE:
WHEN USING KOHLER PRIMER USE W/H COMPRESSION NUT & SLEEVE TO ATTACH PRIMER LINES TO PRIMER.

ASS'Y. NO.	LINE "A"	LINE "B"
11382	10143-65	10143-65
11382-2	10143-9	10143-63
11382-3	10143-63	10143-63

(B)

PART No.	No. REQ.	SIZE	DESCRIPTION / MATERIAL
10143-9	—		TUBE ASS'Y. (SEE TABLE)
	2		W/H #W60×2 COMP. SLEEVE
	2		W/H #W61×2 COMP. NUT
			USED ON KOHLER PRIMER ONLY (SEE NOTE)
	1		PRIMER #K-2406 SAE PURCH. KOHLER CO. OR
74042			PRIMER PUMP ASS'Y.
10143-65	—		TUBE ASS'Y. (SEE TABLE)
10143-63	—		

SCALE FULL SIZE — TOTAL WT.—LBS.
FINISH—PIPER SPECIFICATION #10
MANUFACTURING PRACTICES—PIPER SPECIFICATION #9

LET.	REVISION	DATE	BY
C	-3 ADDED	8-15-49	HRK
B	ON 11382, 10143-65 WAS 10143-63	4-6-49	C.K.
A	-2 ADDED	2-11-48	DC

MODEL | PER PLANE | NEXT ASSEMBLY | SUPERSEDES | SUP. BY

THIS DRAWING IS THE PROPERTY OF THE PIPER AIRCRAFT CORP. AND ITS POSSESSION BY UNAUTHORIZED PERSONS SHALL NOT BE CONSTRUED AS PERMISSION TO REPRODUCE FOR SALE, IN WHOLE OR IN PART, ANY DEVICES SHOWN THEREON.

PIPER AIRCRAFT CORP.
LOCK HAVEN, PENNA.

PRIMER ASSEMBLY

DRAFTSMAN	CHECKER	STANDARDS
Roof-C- 8-19-47	W.E.K. 8-21-47	

11382

461

A461

B

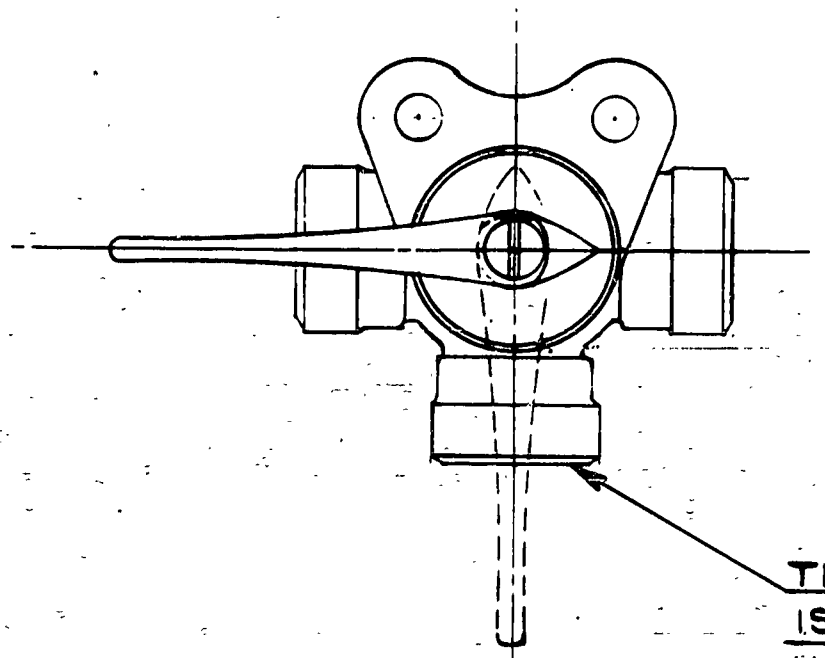



THIS OUTLET OPEN WHEN HANDLE IS IN THE TWO POSITIONS SHOWN. HANDLE AND SHAFT TO BE KEYED ACCORDINGLY

B

VALVE # 108-HD-1/4 IPT, PURCHASED IMPERIAL BRASS CO.

11383 ASSY. SHOWN

11383-2 ASSY. WITH HANDLE OMITTED

LET.	REVISION	DATE.	BY
C	-2 ADDED	10-19-50	H.R.K
B	RED TIP REMOVED	3-21-50	J.C.B
A	OPEN "WAS CLOSED"; RED TIP ADDED	5-10-48	J.C.B

THIS DRAWING IS THE PROPERTY OF THE PIPER AIRCRAFT CORP. AND ITS POSSESSION BY UNAUTHORIZED PERSONS SHALL NOT BE CONSTRUED AS PERMISSION TO REPRODUCE FOR SALE, IN WHOLE OR IN PART, ANY DEVICES SHOWN THEREON.

MODEL	PER PLANE	NEXT ASSEMBLY	SUPERSEDES	SUP. BY

PIPER AIRCRAFT CORP.
LOCK HAVEN, PENNA.

PART No. | No. REQ. | MATERIAL

SCALE FULL SIZE | TOTAL WT.—LBS.

FINISH—PIPER SPECIFICATION #10

MANUFACTURING PRACTICES—PIPER SPECIFICATION #9

VALVE ASSEMBLY — FUEL

DRAFTSMAN	CHECKER	STANDARDS
R.T.M. 8-20-47	L.E.K. 8-21-47	

11383

PENCILTEX A. & B. SMITH CO., PGH., PA.

67

A 67

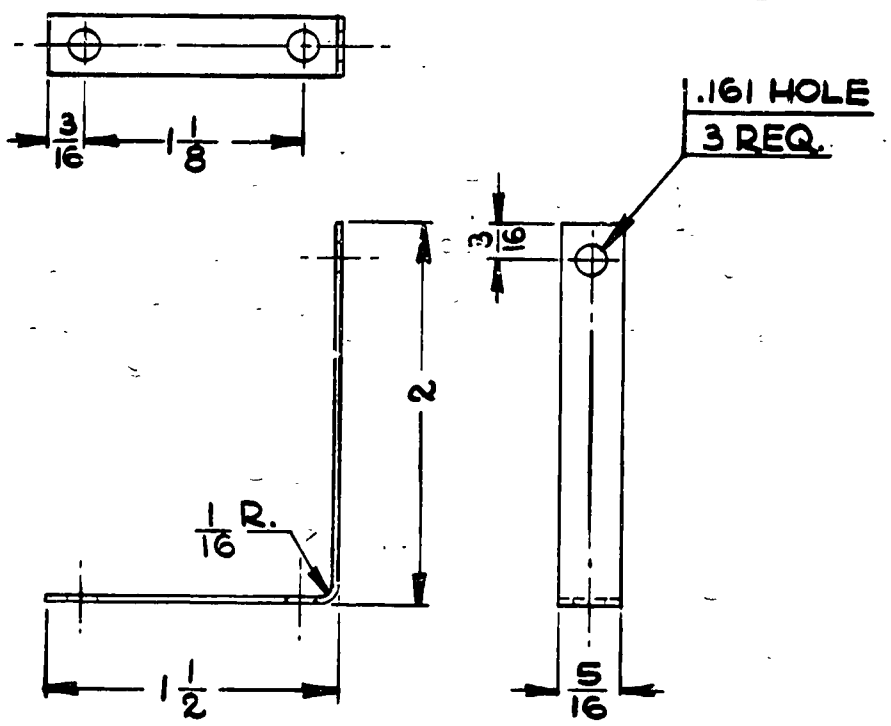

PART No.	No. REQ.	SIZE	DESCRIPTION
		.032 × 5/16 × 3 1/2	3S-1/2H ALUM.

MATERIAL

SCALE FULL SIZE | TOTAL WT.—LBS.

FINISH—PIPER SPECIFICATION #10

MANUFACTURING PRACTICES—PIPER SPECIFICATION #9

JUMPER—CIRCUIT BREAKER

THIS DRAWING IS THE PROPERTY OF THE PIPER AIRCRAFT CORP. AND ITS POSSESSION BY UNAUTHORIZED PERSONS SHALL NOT BE CONSTRUED AS PERMISSION TO REPRODUCE FOR SALE, IN WHOLE OR IN PART, ANY DEVICES SHOWN THEREON.

MODEL	PER PLANE	NEXT ASSEMBLY	SUPERSEDES	SUP. BY

LET.	REVISION	DATE	BY

PIPER AIRCRAFT CORP.
LOCK HAVEN, PENNA.

DRAFTSMAN	CHECKER	STANDARDS
R.J.C. 8-26-47	L.E.K. 8-26-47	

11390

PENCILTEX A. & B. SMITH CO., PGH., PA.

68

A 68

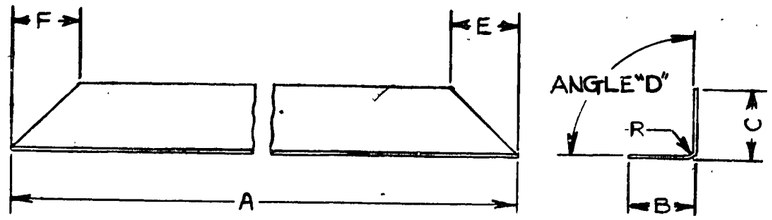

PART NO.	A	B	C	"D"	R	MATERIAL	E	F
11408-2	1½	7/16	5/8	90°	1/32	.032 35½H ALUM		
11408-3	5/8	1/2	1/2	90°	1/32	.032 35½H ALUM		
11408-4	28 7/8	7/8	7/8	108°	1/32	.032 #1025 STL		
11408-5	28 3/8	7/8	7/8	90°	1/32	.032 #1025 STL		
11408-6	19 7/8	7/16	7/16	90°	1/32	.020 H.R. ST'L.		
11408-7	13	3/8	1/2	60°	1/32	.025 35½ H AL		
11408-8	42	3/8	1/2	60°	1/32	.025 35½ H AL		
11408-9	5/8	1/2	1	110°	1/32	.032 35½ HAL		
11408-10	1	5/16	1/2	90°	1/16	.062 #1025 STL		
11408-11	25	1	1	90°	1/32	.032 #1025 STL	1 3/8	1 3/8
11408-12	22 3/8	7/8	7/8	120°	1/32	.032 #1025 STL		
11408-13	23 1/2	7/8	7/8	90°	1/32	.032 #1025 STL	3/4	
11408-14	23 1/2	7/8	7/8	90°	1/32	.032 #1025 STL		3/4
11408-15	13 3/8	3/4	3/4	110°	1/32	.032 #1025 STL		
11408-16	14 1/2	5/8	3/16	90°	1/32	.032 35-½H. ALUM		
11408-17	2 1/2	5/16	5/16	90°	1/32	.016 35-½ H. ALUM		
11408-18	2 1/4	1 1/4	1 1/4	90°	1/32	.032 35-½ H. ALUM		
11408-19	23 5/8	1	5/8	90°	1/32	.032 52S-½ H. ALUM	5/8	5/8
11408-20	25	3/4	3/4	90°	1/32	.032 52S-½ H. ALUM.		
11408-21	24 3/4	1	5/8	90°	1/32	.032 52S-½ H. ALUM	5/8	5/8
11408-22	1/2	2	2	90°	1/32	.032 3S-½ H. ALUM.		
11408-23	29 3/8	3/4	3/4	90°	1/32	.032 52S-½ H. ALUM.		
11408-24	3/8	1 3/8	1	90°	1/32	.032 #1025 STL.		

PART NO.	A	B	C	"D"	E	F	R	MATERIAL
11408-25	12 3/4	1/2	1/2	90°	—	—	1/32	.032 3S-½ H. ALUM.
11408-26	2	1 1/4	1 1/4	90°	—	—	1/32	.032 3S-½ H. ALUM.
11408-27	14 5/8	1/2	5/8	90°	—	—	1/32	.032 52S-½ H. ALUM.

LET.	REVISION	DATE	BY.
R	-27 ADDED	4-12-51	T.E.M.
Q	-26 ADDED	2-9-51	I.N.M.
P	-25 ADDED	11-17-50	H.R.K.
O	ON-15 110° WAS 120°	8-21-50	F.C.S.
N	-24 ADDED	7-18-50	HRK
M	-22 & -23 ADDED	6-12-50	HRK
L	-19, -20, -21 ADDED	11-1-49	R.R.
K	-18 ADDED	8-16-49	C.K.
J	-17 ADDED	7-25-49	R.R.
H	-16 ADDED	4-20-49	C.K.
G	-11, -12, -13, -14, -15 ADDED	2-3-[illegible]	R.M.
F	-8, -9, -10 ADDED	1-3-[illegible]	R.C.
E	-7 ADDED	5-17-48	R.C.
D	-6 ADDED	5-18-[illegible]	R.C.
C	ON -4 28 3/8 WAS 28 5/8	2-13-48	J.C.B.
B	-4, -5, ANGLE "D" ADDED	11-14-47	R.C.
A	-3 ADDED	9-8-47	R.M.
LET.	REVISION	DATE	BY

THIS DRAWING IS THE PROPERTY OF THE PIPER AIRCRAFT CORP. AND ITS POSSESSION BY UNAUTHORIZED PERSONS SHALL NOT BE CONSTRUED AS PERMISSION TO REPRODUCE FOR SALE, IN WHOLE OR IN PART. ANY DEVICES SHOWN THEREON.

MODEL	PER PLANE	NEXT ASSEMBLY	SUPERSEDES	SUP. BY

PIPER AIRCRAFT CORP.
LOCK HAVEN, PENNA.

PART No.	No. REQ.	MATERIAL

SCALE — TOTAL WT.—LBS.

FINISH—PIPER SPECIFICATION #10

MANUFACTURING PRACTICES—PIPER SPECIFICATION #9

ANGLE

R.T.M.	L.E.K.	
9-4-47	9-4-47	
DRAFTSMAN	CHECKER	STANDARDS

11408

462

A462

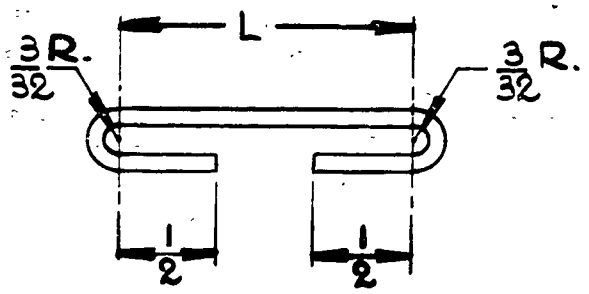

PART NO.	L
11420	1 1/2
11420-2	1 13/16
11420-3	1
11420-4	1 5/16

LET.	REVISION	DATE	BY
C	-4 ADDED	4-28-50	C.K
B	-3 ADDED	2-22-49	C.E.K.
A	-2 & TABLE ADDED	6-1-48	H.R.K.

THIS DRAWING IS THE PROPERTY OF THE PIPER AIRCRAFT CORP. AND ITS POSSESSION BY UNAUTHORIZED PERSONS SHALL NOT BE CONSTRUED AS PERMISSION TO REPRODUCE FOR SALE, IN WHOLE OR IN PART, ANY DEVICES SHOWN THEREON.

MODEL	PER PLANE	NEXT ASSEMBLY	SUPERSEDES	SUP. BY

PIPER AIRCRAFT CORP.
LOCK HAVEN, PENNA.

PART No.	No. REQ.	SIZE	DESCRIPTION
		3/32 DIA. NOTED	#1010 C.F. ST'L. ROD

MATERIAL

SCALE FULL SIZE — TOTAL WT.—LBS.

FINISH—PIPER SPECIFICATION #10

MANUFACTURING PRACTICES—PIPER SPECIFICATION #9

LINK-SEAT SPRING

DRAFTSMAN	CHECKER	STANDARDS
R.J.C. 9-15-47	L.E.K. 9-15-47	

11420

PENCILTEX A. G B. SMITH CO., PGH., PA.

69

A 69

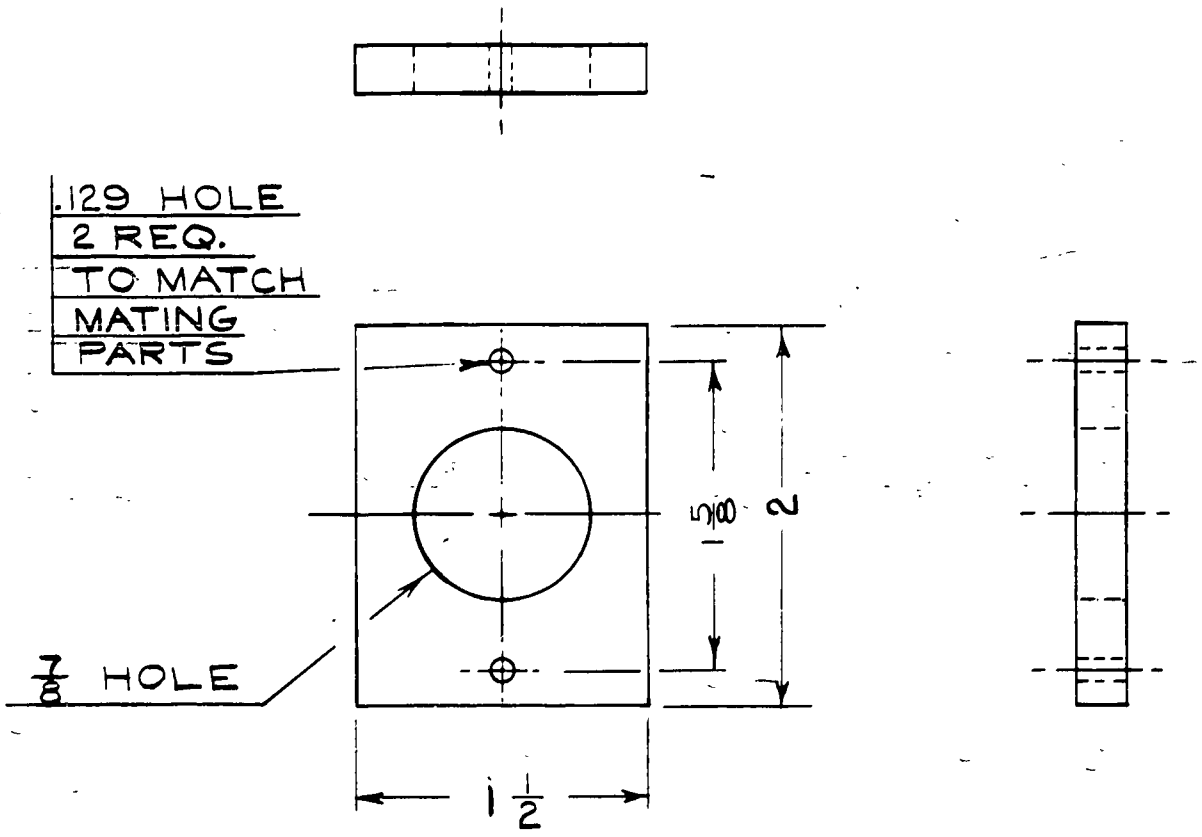
.129 HOLE
2 REQ.
TO MATCH
MATING
PARTS
7/8 HOLE
5/8
2
1 1/2

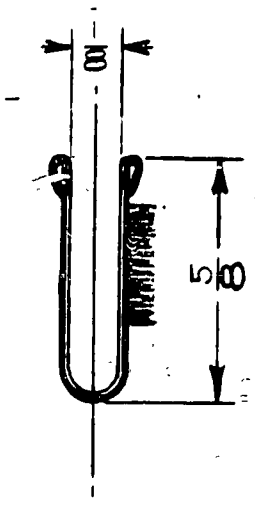



ACTUAL SIZE

SECTION SAME AS SCHLEGEL MFG. CO
SECTION # D11X37 EXCEPT AS NOTED.

LET.	REVISION	DATE	BY

THIS DRAWING IS THE PROPERTY OF THE PIPER AIRCRAFT CORP. AND ITS POSSESSION BY UNAUTHORIZED PERSONS SHALL NOT BE CONSTRUED AS PERMISSION TO REPRODUCE FOR SALE, IN WHOLE OR IN PART, ANY DEVICES SHOWN THEREON.

MODEL	PER PLANE	NEXT ASSEMBLY	SUPERSEDES	SUP. BY

PIPER AIRCRAFT CORP.
LOCK HAVEN, PENNA.

PART No.	No. REQ.	MATERIAL
		NOTED

SCALE 2 × SIZE & NOTED — TOTAL WT.—LBS.

FINISH—PIPER SPECIFICATION #10

MANUFACTURING PRACTICES—PIPER SPECIFICATION #9

SECTION-WEATHERSTRIP CHANNEL

DRAFTSMAN	CHECKER	STANDARDS
R. T. M. 9-17-47	L. E. R. 9-29-47	

11428

PENCILTEX A. B. SMITH CO., PGH., PA.

71

A71

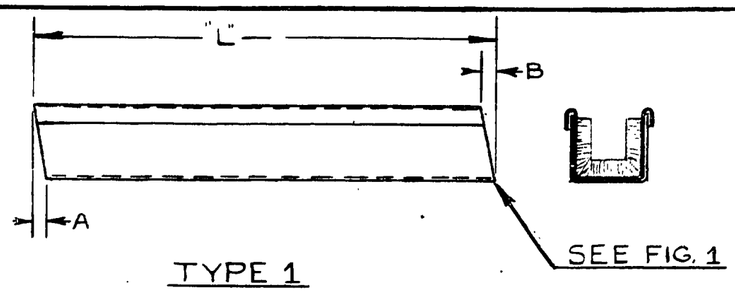

TYPE 1

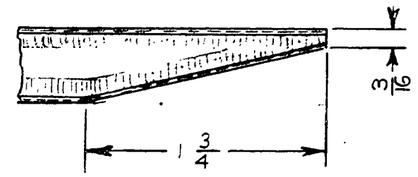

FIG. 1
END DETAIL OF -4 ONLY

PART NO.	TYPE	L	A	B
11432 -2	1	30 5/16		
11432 -3	1	16 15/32	3/32	3/32
11432 -4	1	33 1/16		SEE FIG. 1
11432 -5	1	29 3/4		
11432-6	1	30 1/2		
11432-7	1	15 3/4		
11432-8	1	14 3/4		
11432-9	1	18 1/4		
11432-10	1	28 3/4		
11432-11	1	29 3/8		
11432-12	1	14 3/8		
11432-13	1	28 3/8		

D

THIS DRAWING IS THE PROPERTY OF THE PIPER AIRCRAFT CORP. AND ITS POSSESSION BY UNAUTHORIZED PERSONS SHALL NOT BE CONSTRUED AS PERMISSION TO REPRODUCE FOR SALE, IN WHOLE OR IN PART, ANY DEVICES SHOWN THEREON.

LET.	REVISION	DATE	BY
D	14 3/8 WAS 14 5/16 FOR -12	11-1-50	C.K.
C	-12,-13 ADDED	10-17-49	R.R.
B	-9,-10,-11 ADDED	2-24-49	RM
A	-5,-6,-7 & -8 ADDED	12-24-47	H.K.

MODEL	PER PLANE	NEXT ASSEMBLY	SUPERSEDES	SUP. BY

PIPER AIRCRAFT CORP.
LOCK HAVEN, PENNA.

NOTED
SECTION "A2X69 PURCH.,
THE SCHLEGEL MFG. CO.

PART No.	NO. REQ.	SIZE	DESCRIPTION
			MATERIAL
SCALE			TOTAL WT.—LBS.

FINISH—PIPER SPECIFICATION #10
MANUFACTURING PRACTICES—PIPER SPECIFICATION #9

CHANNEL - WEATHERSTRIP

DRAFTSMAN	CHECKER	STANDARDS
R.T.M. 9-17-47	L.E.K. 10-2-47	

11432

463

A463

WAS 125

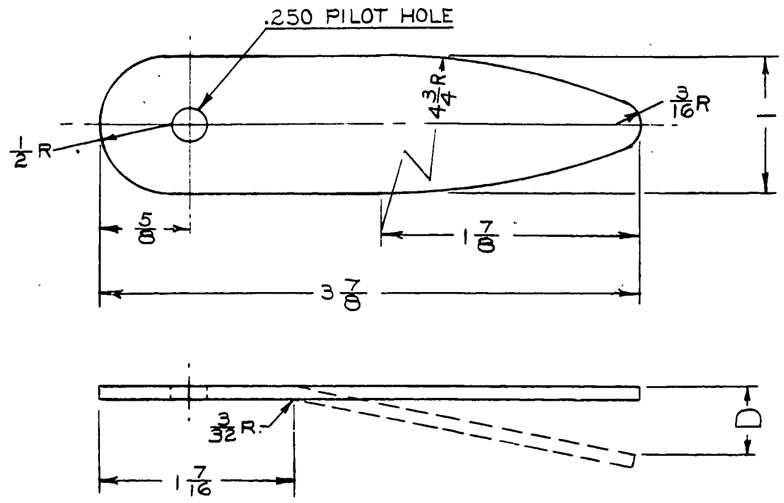

PART NO.	D	PER PLANE	MODEL	NEXT ASS'Y.	SUP. BY
11441-2	0	2	L-4A, L-4B	12551	
			J3, TG-8		
11441-3	11/32	2	J4, J5, J5D	12551	
			HE-1, L-14		
			J5C		11441-4
11441-4	19/32	2	J5C	12551	
11441-5	1/2				
11441-6	3/4				
11441-7	1 1/2				
11441-8	1				

THIS DRAWING IS THE PROPERTY OF THE PIPER AIRCRAFT CORP. AND ITS POSSESSION BY UNAUTHORIZED PERSONS SHALL NOT BE CONSTRUED AS PERMISSION TO REPRODUCE FOR SALE, IN WHOLE OR IN PART, ANY DEVICES SHOWN THEREON

LET.	REVISION	DATE	BY
L	-8 ADDED	3-30-48	RC
K	-6 & -7 ADDED	11-6-47	H.K.
J	-5 ADDED	4-17-46	C.L.W.
H	REDRAWN & REVISED	10-3-45	M.G.S.

MODEL	PER PLANE	NEXT ASSEMBLY	SUPERSEDES	SUP. BY
NOTED	NOTED	NOTED		NOTED

PIPER AIRCRAFT CORP.
LOCK HAVEN, PENNA.

PART No.	No. REQ.	SIZE	DESCRIPTION
		.095×1×3 7/8	#1025 STEEL
		MATERIAL	

SCALE FULL SIZE — TOTAL WT.–LBS.

FINISH–PIPER SPECIFICATION #10

MANUFACTURING PRACTICES–PIPER SPECIFICATION #9

PLATE–FRONT LIFT STRUT LEADING EDGE END

DRAFTSMAN	CHECKER	STANDARDS
M.G.S. 10-3-45	L.E.K. 10-3-45	

11441

464

A464

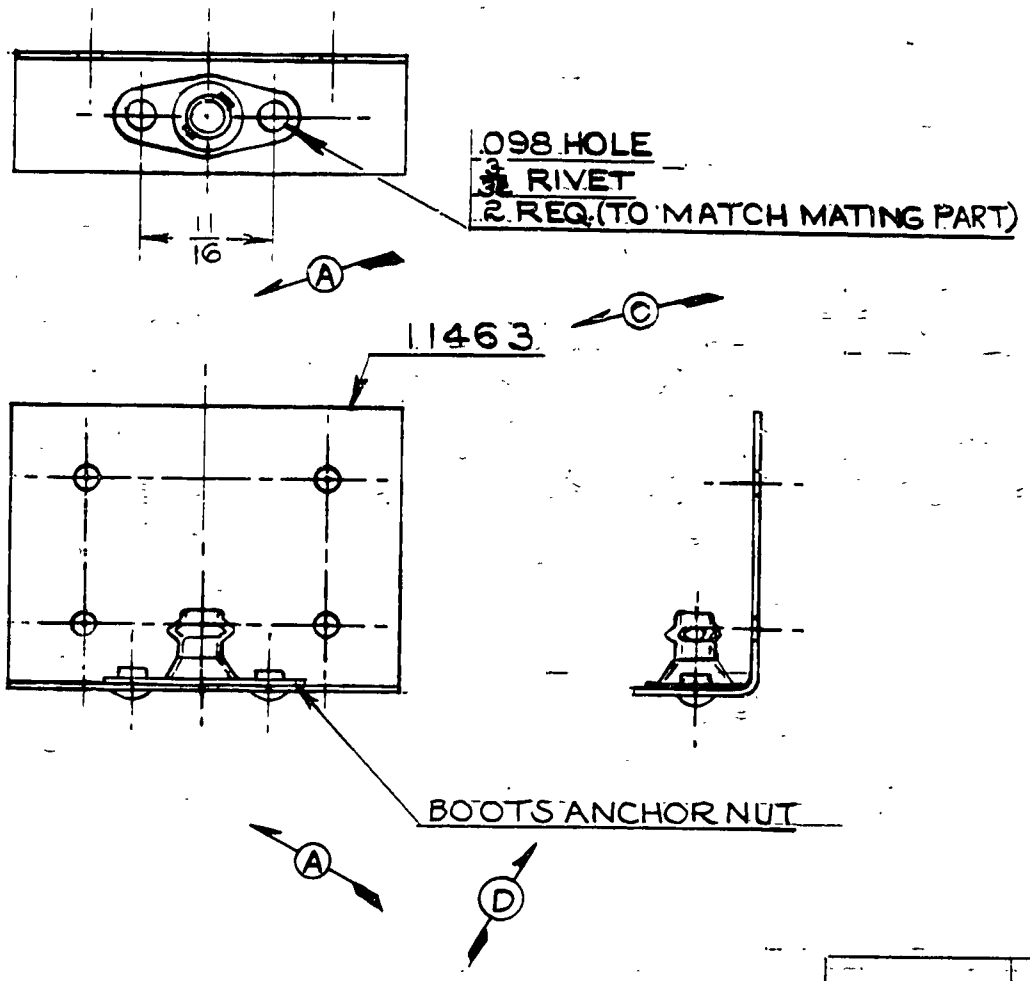

	1	BOOTS ANCHOR NUT #W2SE-1032		
	2	3/32 x 9/64 L	CD. PLATED STL. TUBULAR RIVET	
11463	1	ANGLE		
PART No.	No. REQ.	SIZE	DESCRIPTION MATERIAL	

SCALE FULL SIZE — TOTAL WT.—LBS.

FINISH—PIPER SPECIFICATION #10

MANUFACTURING PRACTICES—PIPER SPECIFICATION #9

THIS DRAWING IS THE PROPERTY OF THE PIPER AIRCRAFT CORP. AND ITS POSSESSION BY UNAUTHORIZED PERSONS SHALL NOT BE CONSTRUED AS PERMISSION TO REPRODUCE FOR SALE, IN WHOLE OR IN PART, ANY DEVICES SHOWN THEREON.

LET.	REVISION	DATE	BY
D	BOOTS ANCHOR NUT #W2SE-1032 WAS ECAS STOP ANCHOR NUT #22-A1-02	11-9-50	K.D.
C	DIM. ON ANGLE REN. 11463 ADDED	9-3-48	R.M.
B	DIMPLE REMOVED	4-1-48	H.R.K.
A	1½ WAS 2; ¾ WAS 1⅛; STL. RIVET WAS ALUM	2-17-48	H.R.K.

MODEL	PER PLANE	NEXT ASSEMBLY	SUPERSEDES	SUP. BY

PIPER AIRCRAFT CORP.
LOCK HAVEN, PENNA.

ANGLE ASSEMBLY - WING
ROOT FAIRING ATTACHMENT

DRAFTSMAN	CHECKER	STANDARDS
R.J.C. 9-29-47	L.E.R. 10-6-47	

11455

PENCILTEX A. & B. SMITH CO., PGH., PA.

B

72

A72

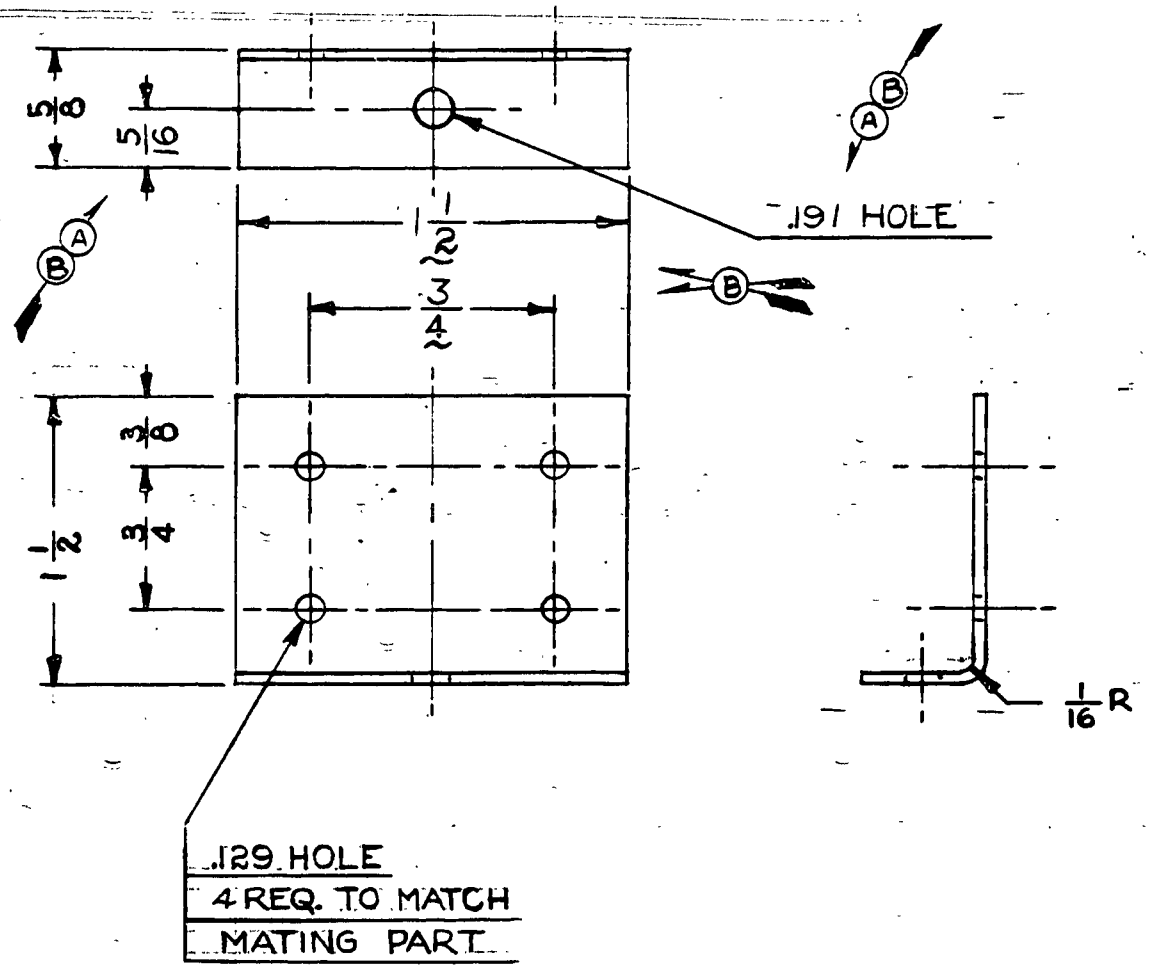

C

		.040 × 1½ × 2⅛	24S-T ALCLAD.
	No. REQ.	SIZE	DESCRIPTION
PART No.		MATERIAL	
SCALE FULL SIZE		TOTAL WT.—LBS.	

FINISH—PIPER SPECIFICATION #10

MANUFACTURING PRACTICES—PIPER SPECIFICATION #9

THIS DRAWING IS THE PROPERTY OF THE PIPER AIRCRAFT CORP. AND ITS POSSESSION BY UNAUTHORIZED PERSONS SHALL NOT BE CONSTRUED AS PERMISSION TO REPRODUCE FOR SALE, IN WHOLE OR IN PART, ANY DEVICES SHOWN THEREON.

ANGLE - WING ROOT FAIRING ATTACHMENT

LET.	REVISION	DATE	BY
C	DIMPLE REMOVED	4-1-48	HRK
B	1½ WAS 2; ¾ WAS 1¼ 5/16 WAS 15/64; .191 HOLE WAS .170	2-18-48	HRK
A	5/64 WAS 5/16 TO HOLE WAS .191	1-7-48	RM.

MODEL	PER PLANE	NEXT ASSEMBLY	SUPERSEDES	SUP. BY

PIPER AIRCRAFT CORP.
LOCK HAVEN, PENNA.

L.E.K.	J.C.B.	
9-30-47	10-3-47	
DRAFTSMAN	CHECKER	STANDARDS

11463

PENCILTEX A. & B. SMITH CO., PGH., PA.

C

73

A73

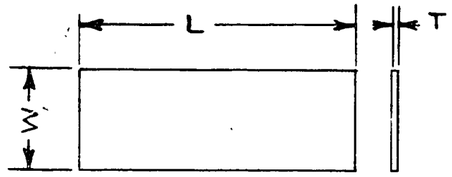

PART No.	L	W	T	MAT'L.	REMARKS
11473-2	14½	7/16	.025	3S-½H ALUM.	
11473-3	13¾	7/16	.025	3S-½H ALUM.	
11473-4	12	7/16	.025	3S-½H ALUM.	
11473-5	2⅝	7/16	.025	3S-½H ALUM.	
11473-6	13	7/16	.025	3S-½H ALUM.	
11473-7	32½	7/16	.025	3S-½H ALUM.	
11473-8	28½	7/16	.025	3S-½H ALUM.	
11473-9	1 9/16	1½	.062	#1025 STEEL	
11473-10	1 3/16	¾	.045	#1025 STEEL	
11473-11	3½	1	.012	TYPE 302 ST. STL.	
11473-12	¾	⅛	.032	#1025 STEEL	
11473-13	3¾	2⅝	.025	3S-½H ALUM.	
11473-14	13	1	¼	RUBBER-SHORE HARDNESS #80	
11473-15	2¾	1	.062	#1025 STEEL	
11473-16	1½	1 ¼	.045	#1025 STEEL	
11473-17	1 1/16	1 5/16	.045	#1025 STEEL	
11473-18	4	5/8	.045	#1025 STEEL	
11473-19	1½	5/16	.125	#1025 STEEL	
11473-20	2½	⅞	.045	#1025 STEEL	
11473-21	1¼	⅞	.045	#1025 STEEL	
11473-22	1½	½	.045	#1025 STEEL	
11473-23	2¼	⅝	.045	#1025 STEEL	
11473-24	2	⅜	.032	#1025 STEEL	
11473-25	2	½	½	PLEXIGLAS	
11473-26	23	¾	.050	PYRALIN	
11473-27	28	¾	.050	PYRALIN	

PART No.	L	W	T	MAT'L.	REMARKS
11473-28	30½	¾	.050	PYRALIN	
11473-29	2¼	2¼	.020	H.R. STEEL	
11473-30	46	⅞	.040	52S-½H ALUM.	
11473-31	3	½	1/16	HARD FIBER	
11473-32	3	½	3/16	HARD FIBER	
11473-33	14	⅜	.030	PYRALIN	
11473-34	⅝	⅜	.045	#1025 STEEL	
11473-35	5	5	.040	24ST ALUM.	
11473-36	1⅛	¾	1/16	HARD FIBER	
11473-37	⅜	⅜	.032	#1025 STL.	
11473-38	2 3/16	⅞	.062	#1025 STL.	
11473-39	32½	⅜	.025	3S-½H ALUM.	
11473-40	6½	5/16	.020	3S-½H. ALUM.	

SEE ALSO DWG. 80042

LET.	REVISION	DATE	BY
AA	-40 ADDED	2-28-51	I.E.M.
Z	2 WAS 1½ ON -24	2-2-51	M.G.
Y	2⅝ WAS 2⅜ ON -38	12-6-50	H.R.K.
X	-38 & -39 ADDED	11-6-50	R.M.
W	-37 ADDED	9-9-50	C.K.
V	-36 ADDED	6-23-50	H.R.K.
U	-35 ADDED	4-11-50	R.C.
T	-34 ADDED	4-4-50	C.K.
S	-33 ADDED	3-31-50	H.R.K.
R	-30-31 & -32 ADDED	2-28-50	C.K.
Q	-29 ADDED	11-25-49	H.R.K.
P	-25-26-27-28 ADDED	10-13-49	J.C.B.
O	-24 ADDED	10-5-49	R.C.
N	1½ WAS 1 FOR L ON -16	10-1-49	R.R.
M	-23 ADDED	8-25-49	R.R.
L	-22 ADDED	7-15-49	C.K.
K	-20 & -21 ADDED	4-6-49	C.K.
J	-19 ADDED	3-24-49	R.M.
H	L OF -15 WAS 4	2-10-49	R.M.
G	-16, -17, -18 ADDED	1-13-49	C.L.W.
F	-15 ADDED	6-7-48	R.M.
E	-14 ADDED	5-14-48	D.C.
D	-13 ADDED	3-12-48	R.M.
C	-11, -12 ADDED	3-3-48	H.R.K.
B	-10 ADDED	1-23-48	D.C.
A	-9 ADDED	12-4-47	J.C.B.

MODEL	PER PLANE	NEXT ASSEMBLY	SUPERSEDES	SUP. BY

THIS DRAWING IS THE PROPERTY OF THE PIPER AIRCRAFT CORP. AND ITS POSSESSION BY UNAUTHORIZED PERSONS SHALL NOT BE CONSTRUED AS PERMISSION TO REPRODUCE FOR SALE, IN WHOLE OR IN PART, ANY DEVICES SHOWN THEREON.

PIPER AIRCRAFT CORP.
LOCK HAVEN, PENNA.

PART No.	NO. REQ.	MATERIAL

SCALE — TOTAL WT.—LBS.

FINISH—PIPER SPECIFICATION #10

MANUFACTURING PRACTICES—PIPER SPECIFICATION #9

PLATE - RECTANGULAR

DRAFTSMAN	CHECKER	STANDARDS
R. T. M. 10-3-47	J.C.B. 10-3-47	

11473

A465

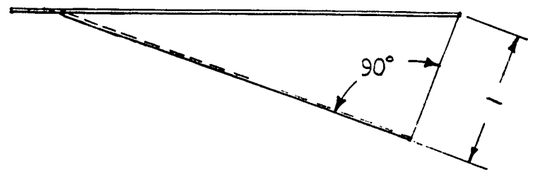

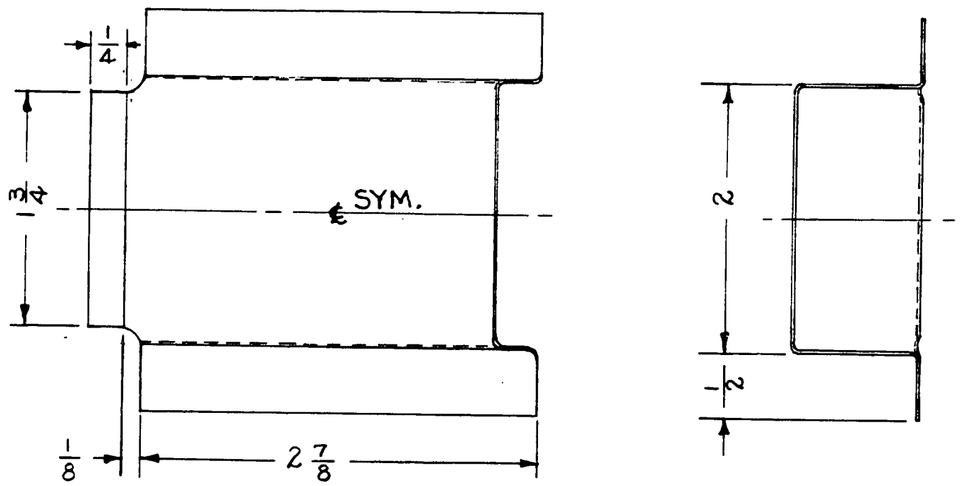

NOTE:
ALL BEND RADII ARE 1/32

LET.	REVISION	DATE	BY	MODEL	PER PLANE	NEXT ASSEMBLY	SUPERSEDES	SUP. BY	

THIS DRAWING IS THE PROPERTY OF THE PIPER AIRCRAFT CORP. AND ITS POSSESSION BY UNAUTHORIZED PERSONS SHALL NOT BE CONSTRUED AS PERMISSION TO REPRODUCE FOR SALE, IN WHOLE OR IN PART, ANY DEVICES SHOWN THEREON.

PIPER AIRCRAFT CORP.
LOCK HAVEN, PENNA.

PART No.	No. REQ.	SIZE	MATERIAL
		.025 x 3 1/8 x 5	35-1/2 H. ALUM.

SCALE FULL SIZE — TOTAL WT.—LBS.

FINISH—PIPER SPECIFICATION #10

MANUFACTURING PRACTICES—PIPER SPECIFICATION #9

SCOOP - BOTTOM COWL AIR

DRAFTSMAN	CHECKER	STANDARDS
L.E.K. 10-17-47	H.R.K. 10-21-47	

11496

466

A466

PART NO.	D	MODEL	PER PLANE	NEXT ASSY.
11501-2	5/16	J3	2	12352
11501-3	0			
11501-4	27/32	J5C	2	10096
11501-5	5/8			
11501-6	9/16			

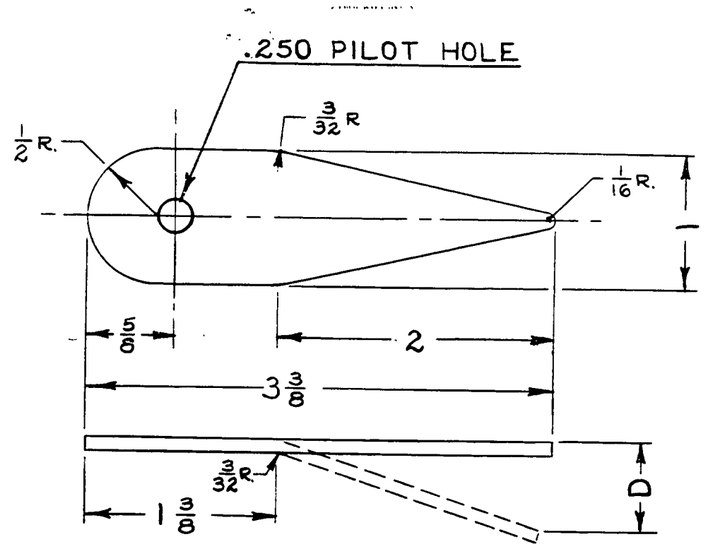

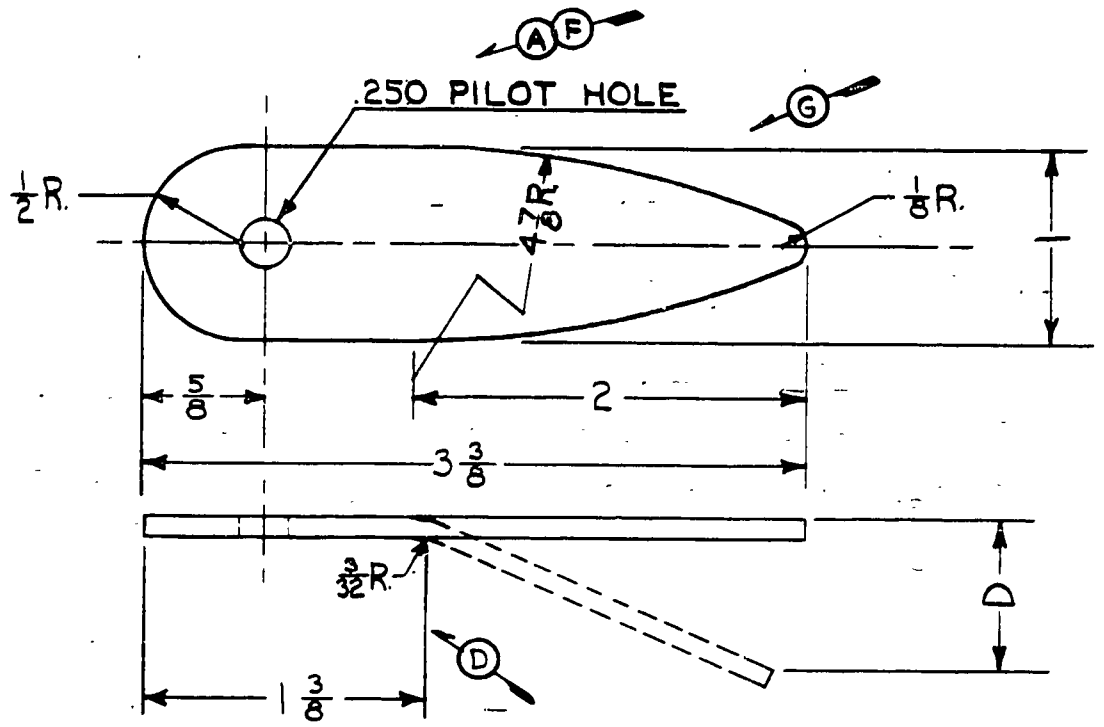

C

J

NOTE:

THIS PART WAS ORIGINALLY PART NO. 127. HEREAFTER ONLY NO. 11511 SHOULD SERVE TO IDENTIFY THIS PART.

PART NO.	D	MODEL	PER SHIP	NEXT ASS'Y.
11511-2	7/16	J4	2	11522
11511-3	9/16	J5, J5B, J5D, HE-1, L-14	2	1341
11511-4	13/16	J5C	2	10096

K

LIMITS, SHOP PRACTICES AND FINISH. UNLESS OTHERWISE NOTED, TO BE IN ACCORDANCE WITH PIPER SPECIFICATIONS #9 AND #10.

PART NO.	No. REQ.	SIZE	DESCRIPTION / MATERIAL
		.095 x 1 x 3 3/8	#1025 STEEL

SCALE FULL SIZE | TOTAL WT. - LBS.

FINISH

PLATE - REAR LIFT STRUT LEADING EDGE REINFORCING

LET.	REVISION	DATE	BY
K	J5C MODEL REF. CANC. FOR -3, -4 ADDED	10-2-45	L.E.K.
J	L-14 MODEL REF. ADDED TO -3	6-13-45	J.B.M.
H	REDRAWN, WITHOUT CHANGE	4-10-44	R.D.R.
G	4 7/8 R. ADDED	8-2-43	C.E.K.
F	.250 WAS 1/4	4-28-43	R.R.F.
E	MODEL, PER SHIP, NEXT ASS'Y. ADDED	11-23-42	C.E.K.
D	RADIUS ADDED	10-31-41	V.F.
C	1 3/8 WAS 1 7/16	10-31-41	V.F.
B	TABLE ADDED	10-30-41	V.F.
A	1/4 WAS 5/16	9-30-41	W.E.S.

NOTED MODEL	NOTED PER SHIP	NOTED NEXT ASSEMBLY	SUPERSEDES	SUP. BY

PIPER AIRCRAFT CORP.
LOCK HAVEN, PENNA.

DRAWN	CHECKED	APPROVED
R. REEDER 4-10-44	R.E.T 4-11-44	

11511

74

A74

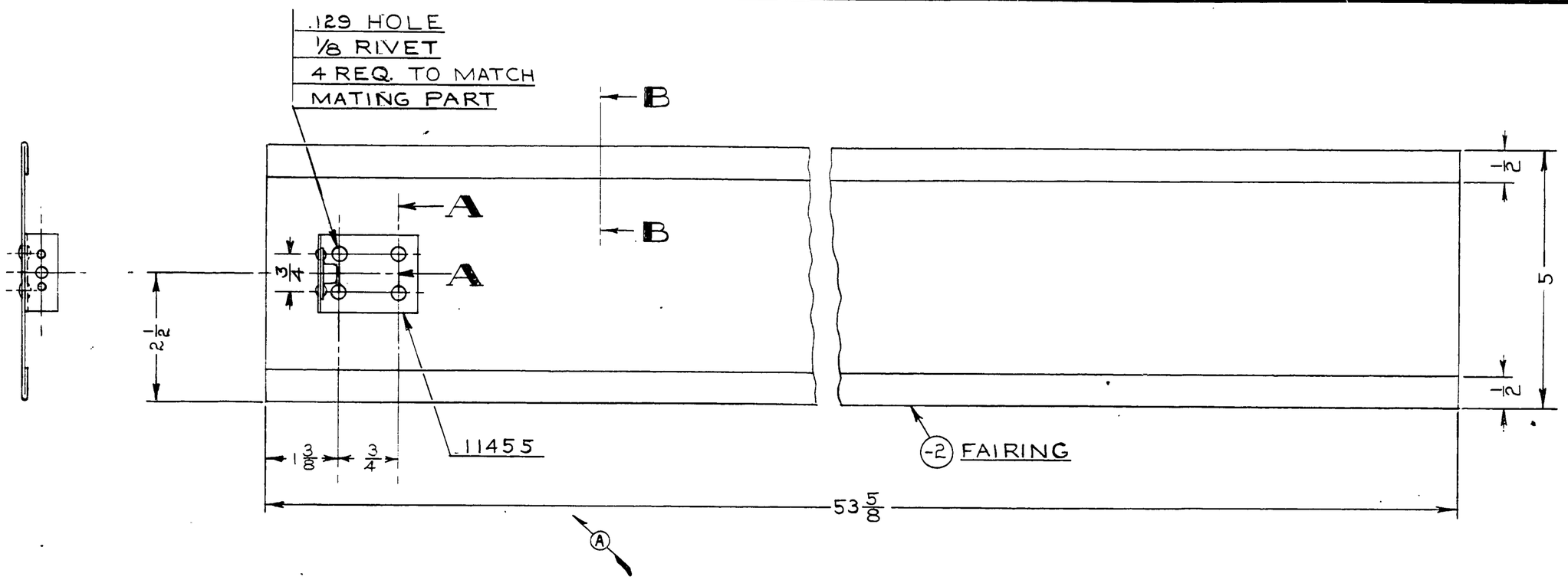

SECTION A-A
FULL SIZE

SECTION B-B
FULL SIZE

B

PART No.	NO. REQ.	SIZE	DESCRIPTION
	4	1/8 x 5/16 L	2S ALUM. C'SK. HD. RIVET
11455	1		ANGLE ASSY.
-2	1	.020 x 6 1/4 x 53 5/8	3S-1/2H ALUM.

MATERIAL

SCALE 6 IN. = 1 FT — TOTAL WT.—LBS.

FINISH—PIPER SPECIFICATION #10

MANUFACTURING PRACTICES—PIPER SPECIFICATION #9

FAIRING ASSEMBLY-
WING ROOT UPPER

LET.	REVISION	DATE	BY
B	.020 WAS .016	3-23-49	HRK
A	11455 WAS 11463	2-17-48	HRK

MODEL	PER PLANE	NEXT ASSEMBLY	SUPERSEDES	SUP. BY

PIPER AIRCRAFT CORP.
LOCK HAVEN, PENNA.

DRAFTSMAN	CHECKER	STANDARDS
R.T.M. 1-6-48	J.C.B. 1-12-48	

11523

THIS DRAWING IS THE PROPERTY OF THE PIPER AIRCRAFT CORP. AND ITS POSSESSION BY UNAUTHORIZED PERSONS SHALL NOT BE CONSTRUED AS PERMISSION TO REPRODUCE FOR SALE, IN WHOLE OR IN PART. ANY DEVICES SHOWN THEREON.

A468

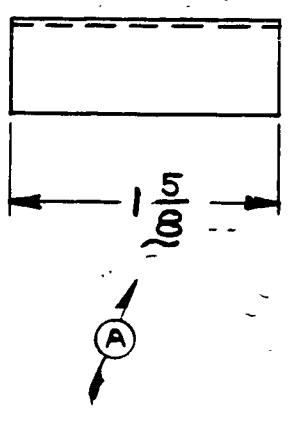



LET.	REVISION	DATE	BY
A	1 5/8 WAS 1 3/8	1-15-48	R.M.

THIS DRAWING IS THE PROPERTY OF THE PIPER AIRCRAFT CORP. AND ITS POSSESSION BY UNAUTHORIZED PERSONS SHALL NOT BE CONSTRUED AS PERMISSION TO REPRODUCE FOR SALE, IN WHOLE OR IN PART, ANY DEVICES SHOWN THEREON.

MODEL	PER PLANE	NEXT ASSEMBLY	SUPERSEDES	SUP. BY

PIPER AIRCRAFT CORP.
LOCK HAVEN, PENNA.

85351	REF.	CHANNEL SECTION	
		1 5/8 LONG.	PIPER SECTION 85351
PART No.	No. REQ.	SIZE	DESCRIPTION
		MATERIAL	
SCALE FULL SIZE		TOTAL WT.–LBS.	

FINISH—PIPER SPECIFICATION #10

MANUFACTURING PRACTICES—PIPER SPECIFICATION #9

CHANNEL – FUSELAGE

DRAFTSMAN	CHECKER	STANDARDS	
H.R.K. 11-18-47	J.C.B. 11-24-47		11535

PENCILTEX A. & B. SMITH CO., PGH., PA.

A75

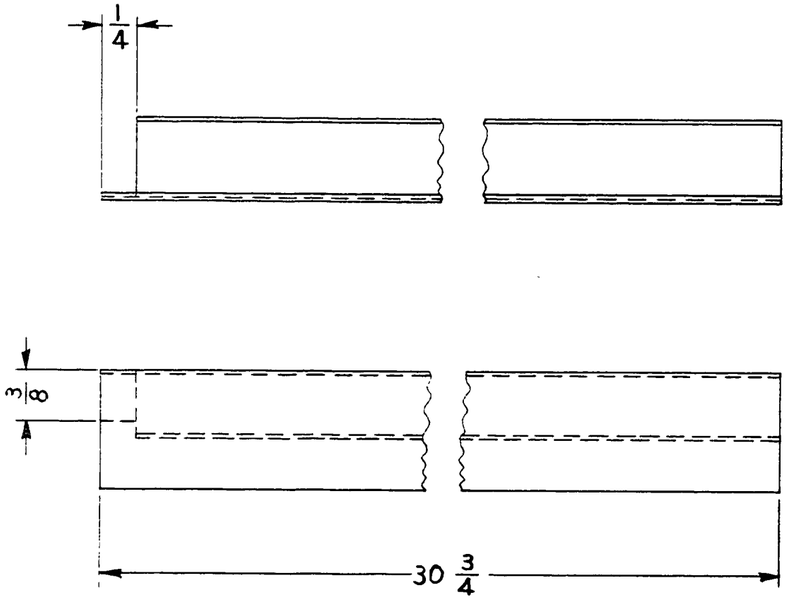

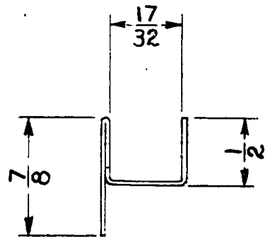

11546 DETAIL

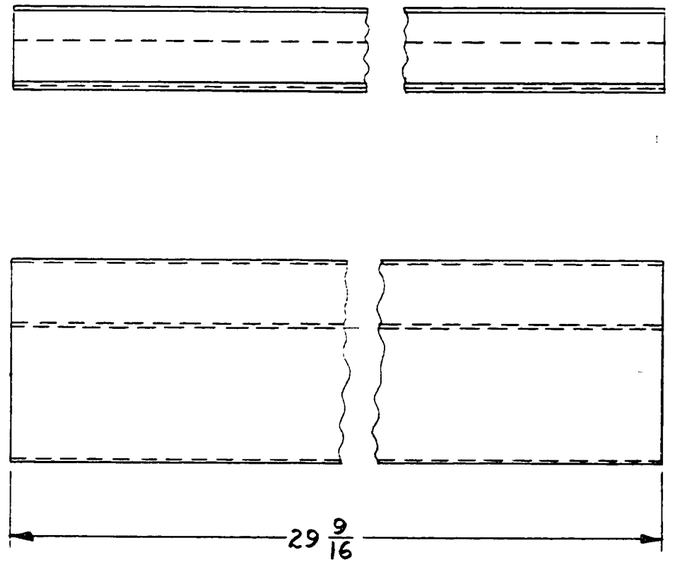

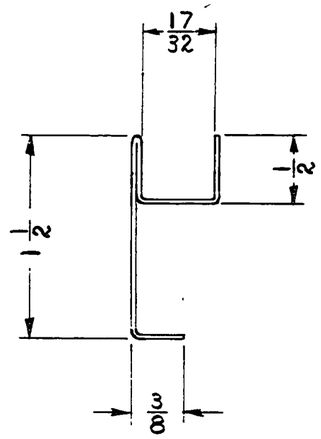

11546-2 DETAIL

PART NO.	MATERIAL
11546	.032 *1025 STEEL
11546-2	.020 H.R. STEEL

LET.	REVISION	DATE	BY
E	REDRAWN & REVISED	6-22-50	C.K.

MODEL	PER PLANE	NEXT ASSEMBLY	SUPERSEDES	SUP. BY

THIS DRAWING IS THE PROPERTY OF THE PIPER AIRCRAFT CORP. AND ITS POSSESSION BY UNAUTHORIZED PERSONS SHALL NOT BE CONSTRUED AS PERMISSION TO REPRODUCE FOR SALE, IN WHOLE OR IN PART. ANY DEVICES SHOWN THEREON.

PIPER AIRCRAFT CORP.
LOCK HAVEN, PENNA.

PART NO.	No. REQ.	NOTED SIZE	NOTED DESCRIPTION
			MATERIAL

SCALE FULL SIZE | TOTAL WT.-LBS.

FINISH—PIPER SPECIFICATION #10

MANUFACTURING PRACTICES—PIPER SPECIFICATION #9

CHANNEL—FUSELAGE
WINDOW BOTTOM

DRAFTSMAN	CHECKER	STANDARDS
C. E. K. 6-22-50	H. R. K. 6-23-50	

11546

469

A469

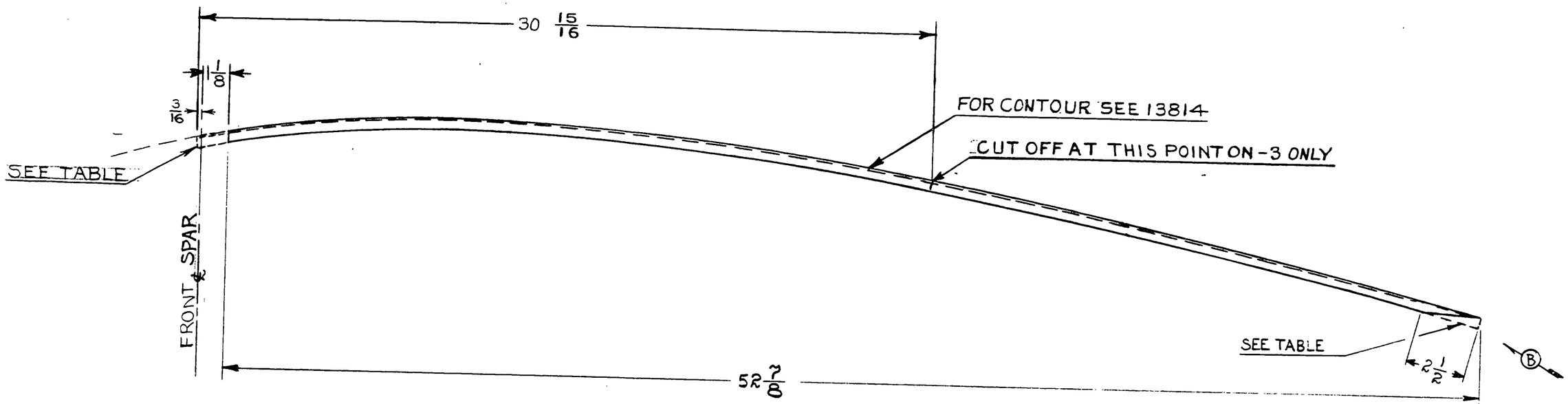

PART NO.	REMARKS
11555	SHOWN
11555-2	AS SHOWN DOTTED
11555-3	SAME AS -2 EXCEPT AS NOTED

LET.	REVISION	DATE	BY
C	-3 ADDED	2-19-51	I.M.M
B	2½ CUT-OFF REMOVED FOR -2	12-14-49	K.D.
A	-2 ADDED	2-17-48	R.M

MODEL	PER PLANE	NEXT ASSEMBLY	SUPERSEDES	SUP. BY

THIS DRAWING IS THE PROPERTY OF THE PIPER AIRCRAFT CORP. AND ITS POSSESSION BY UNAUTHORIZED PERSONS SHALL NOT BE CONSTRUED AS PERMISSION TO REPRODUCE FOR SALE, IN WHOLE OR IN PART, ANY DEVICES SHOWN THEREON.

PIPER AIRCRAFT CORP.
LOCK HAVEN, PENNA.

13814	REF	RIB OUTLINE
84501	REF.	CHANNEL SECTION
	NOTED	PIPER SECTION 84501-2

PART NO.	No. REQ.	SIZE	DESCRIPTION
			MATERIAL

SCALE 3 IN. = 1 FT. — TOTAL WT.-LBS.

FINISH—PIPER SPECIFICATION #10

MANUFACTURING PRACTICES—PIPER SPECIFICATION #9

CHANNEL - FUSELAGE TOPDECK

DRAFTSMAN	CHECKER	STANDARDS
H.R.K. 11-17-47	J.C.B. 11-24-47	

11555

A470

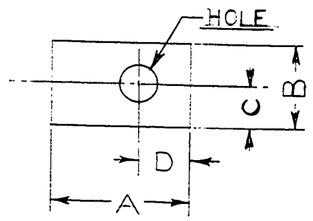

PART NO.	A	B	C	D	HOLE	MATERIAL
11568-2	3/4	5/8	5/16	1/4	.219	.045 #1025 STEEL
11568-3	3/4	1/2	1/4	5/16	.219	.045 #1025 STEEL
11568-4	1 1/2	1	1/2	7/16	.438	.045 #1025 STEEL
11568-5	1	5/8	5/16	1/4	.219	.045 #1025 STEEL

PART NO.	A	B	C	D	HOLE	MATERIAL

PART NO.	A	B	C	D	HOLE	MATERIAL

LET.	REVISION	DATE	BY
C	-5 ADDED	11-14-49	C.K.
B	REDRAWN & -4 ADDED	9-1-49	R.M.

MODEL	PER PLANE	NEXT ASSEMBLY	SUPERSEDES	SUP. BY

THIS DRAWING IS THE PROPERTY OF THE PIPER AIRCRAFT CORP. AND ITS POSSESSION BY UNAUTHORIZED PERSONS SHALL NOT BE CONSTRUED AS PERMISSION TO REPRODUCE FOR SALE, IN WHOLE OR IN PART, ANY DEVICES SHOWN THEREON.

PIPER AIRCRAFT CORP.
LOCK HAVEN, PENNA.

PART NO.	NO. REQ.	MATERIAL

SCALE | TOTAL WT.-LBS.

FINISH-PIPER SPECIFICATION #10

MANUFACTURING PRACTICES-PIPER SPECIFICATION #9

LUGS - ATTACHMENT

DRAFTSMAN	CHECKER	STANDARDS
9-1-49	H.R.K.	
R.T.M.	9-7-49	

11568

471

A471

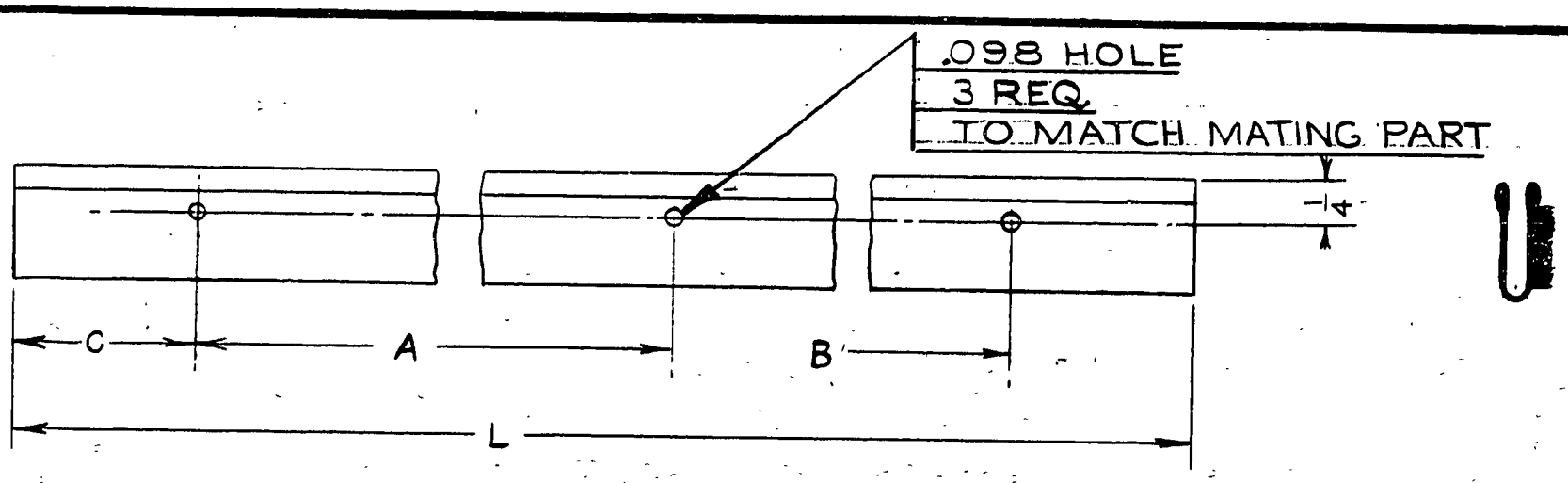

PART NO.	L	A	B	C
11648	14 1/4	6 7/8	13 3/4	1/4
11648-2	17	8 1/4	16 5/8	1/4
11648-3	13	6 1/4	12 1/2	1/4
11648-4	13 1/4	6 3/8	12 3/4	1/4
11648-5	14 7/16	6 31/32	13 15/16	1/4

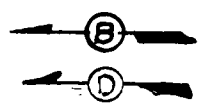

LET.	REVISION	DATE	BY
G	17 WAS 17 1/4; 8 1/4 WAS 8 3/8; 16 5/8 WAS 16 3/4 ON -2	12-6-50	H.R.K.
F	17 1/4 WAS 17 3/8, 8 5/8 WAS 8 1/8, 16 3/4 WAS 16 1/4 ON -2	7-26-50	C.K.
E	-4 & -5 ADDED; 13 WAS 12 3/4, 6 1/4 WAS 6 1/8, 12 1/2 WAS 12 1/8 ON -3; 14 1/4 WAS 14, 6 7/8 WAS 6 3/4, 13 3/4 WAS 13 1/2 ON 11648	4-14-50	C.K.
D	11648-2 A WAS 7 3/8, B WAS 14 3/4, & C WAS 1	1-13-50	M.G.
C	-3 ADDED	10-20-49	C.K.
B	6 3/4 WAS 6; 13 1/2 WAS 12; 1/4 WAS 1	3-22-49	C.E.K.
A	TABLE & -2 ADDED	3-1-49	C.E.K.

THIS DRAWING IS THE PROPERTY OF THE PIPER AIRCRAFT CORP. AND ITS POSSESSION BY UNAUTHORIZED PERSONS SHALL NOT BE CONSTRUED AS PERMISSION TO REPRODUCE FOR SALE, IN WHOLE OR IN PART, ANY DEVICES SHOWN THEREON.

MODEL	PER PLANE	NEXT ASSEMBLY	SUPERSEDES	SUP. BY

PIPER AIRCRAFT CORP.
LOCK HAVEN, PENNA.

11428	DWG REF ONLY	WEATHERSTRIP CHANNEL SECTION	
		NOTED	PIPER SECTION 11428
PART No.	No. REQ.	SIZE	DESCRIPTION
		MATERIAL	
SCALE FULL SIZE		TOTAL WT.–LBS.	

FINISH–PIPER SPECIFICATION #10
MANUFACTURING PRACTICES–PIPER SPECIFICATION #9

CHANNEL-WEATHERSTRIP

DRAFTSMAN	CHECKER	STANDARDS	
R.T.M. 12-23-47	H.R.K. 12-30-47		11648

PENCILTEX A. B. SMITH CO., PGH., PA.

A76

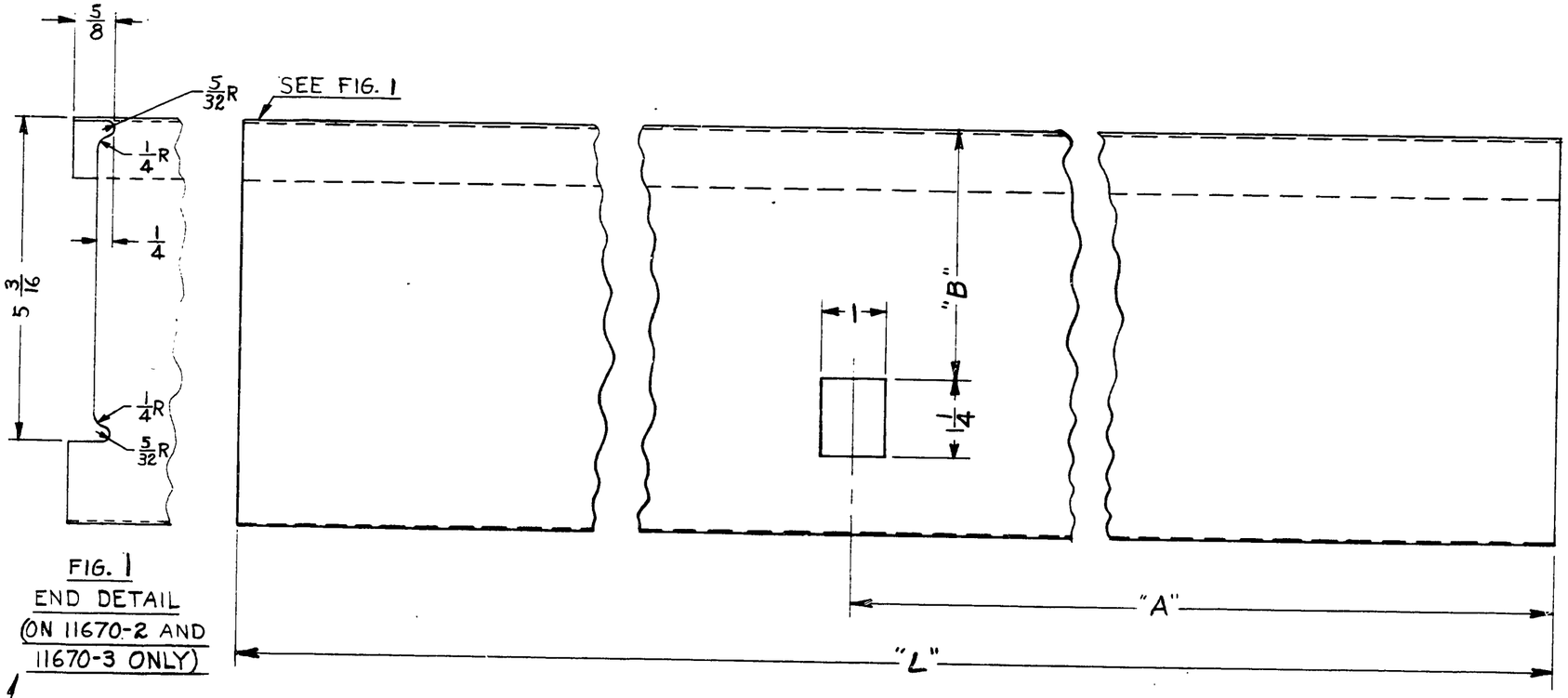

FIG. 1
END DETAIL
(ON 11670-2 AND
11670-3 ONLY)

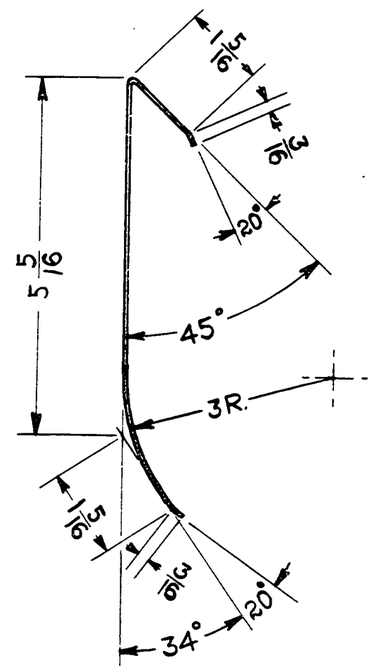

(B)

PART NO.	"L"	"A"	"B"	MAT'L.	REMARKS
11670	30 9/16	19 3/8	4	.025 3S½H. ALUM	L.H. SHOWN
11670-1	30 9/16	19 3/8	4	.025 3S½H. ALUM.	R.H. OPP.
11670-2	32 3/4	21 3/16	3 15/16	.025 3S½H. ALUM.	WITH END AS SHOWN IN FIG. 1
11670-3	32 3/4	21 3/16	3 15/16	.025 3S-½H. ALUM.	OPP. TO - 2

LET.	REVISION	DATE	BY
C	-3 ADDED	2-21-50	C.K.
B	FIG. 1 ADDED	1-27-50	C.K.
A	-2 & TABLE ADDED	12-29-49	J.O.

MODEL | PER PLANE | NEXT ASSEMBLY | SUPERSEDES | SUP. BY

THIS DRAWING IS THE PROPERTY OF THE PIPER AIRCRAFT CORP. AND ITS POSSESSION BY UNAUTHORIZED PERSONS SHALL NOT BE CONSTRUED AS PERMISSION TO REPRODUCE FOR SALE, IN WHOLE OR IN PART, ANY DEVICES SHOWN THEREON.

PIPER AIRCRAFT CORP.
LOCK HAVEN, PENNA.

SEE TABLE

PART No. | No. REQ. | SIZE | DESCRIPTION
MATERIAL
SCALE 6 IN. = 1 FT. | TOTAL WT.-LBS.
FINISH—PIPER SPECIFICATION #10
MANUFACTURING PRACTICES—PIPER SPECIFICATION #9

SPAR—WING FALSE

DRAFTSMAN	CHECKER	STANDARDS
H.R.K. 1-19-48	R.T.M. 1-21-48	

11670

472

A472

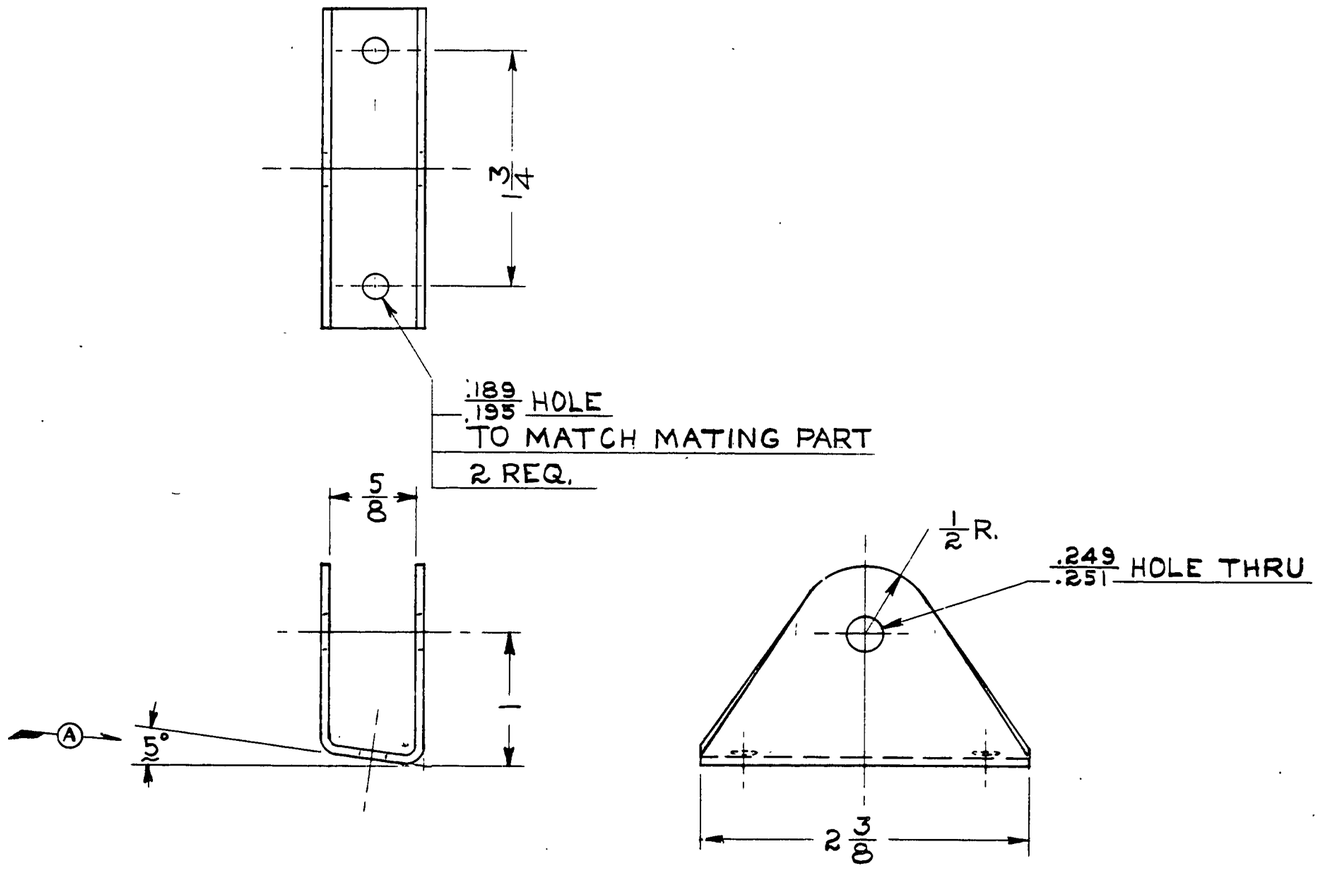
3¼
.189 / .195 HOLE
TO MATCH MATING PART
2 REQ.
5/8
A
5°
1/2 R.
.249 / .251 HOLE THRU
2 3/8

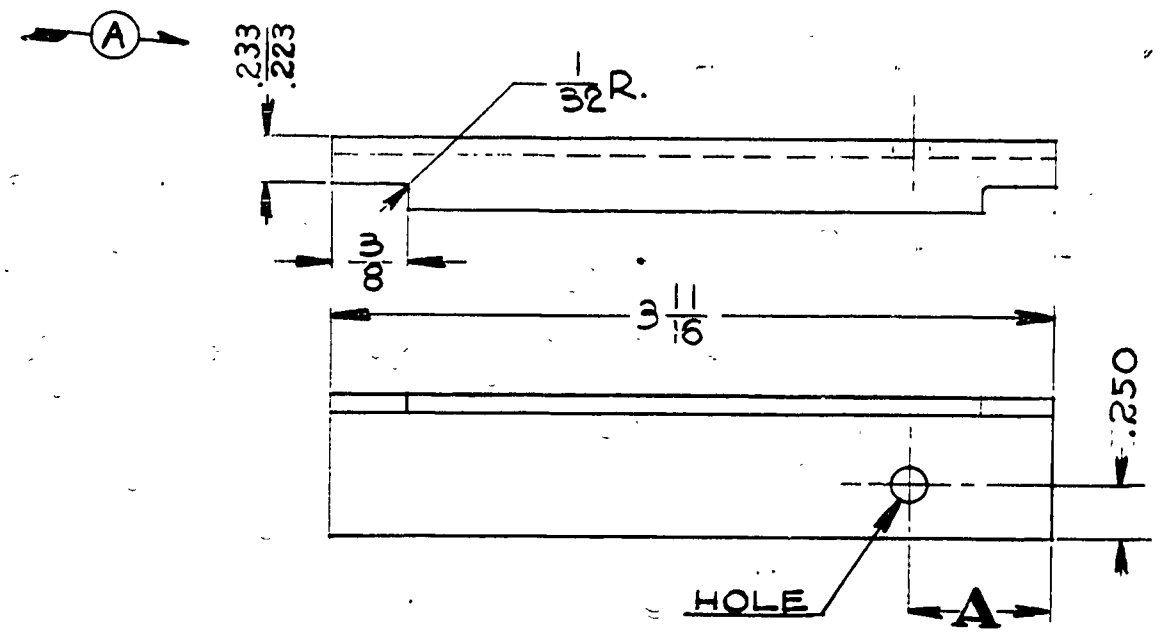

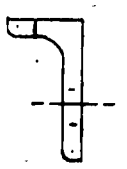

PART NO.	HOLE	"A"
11675-2	.191	23/32
11675-3	3/8	1 17/32

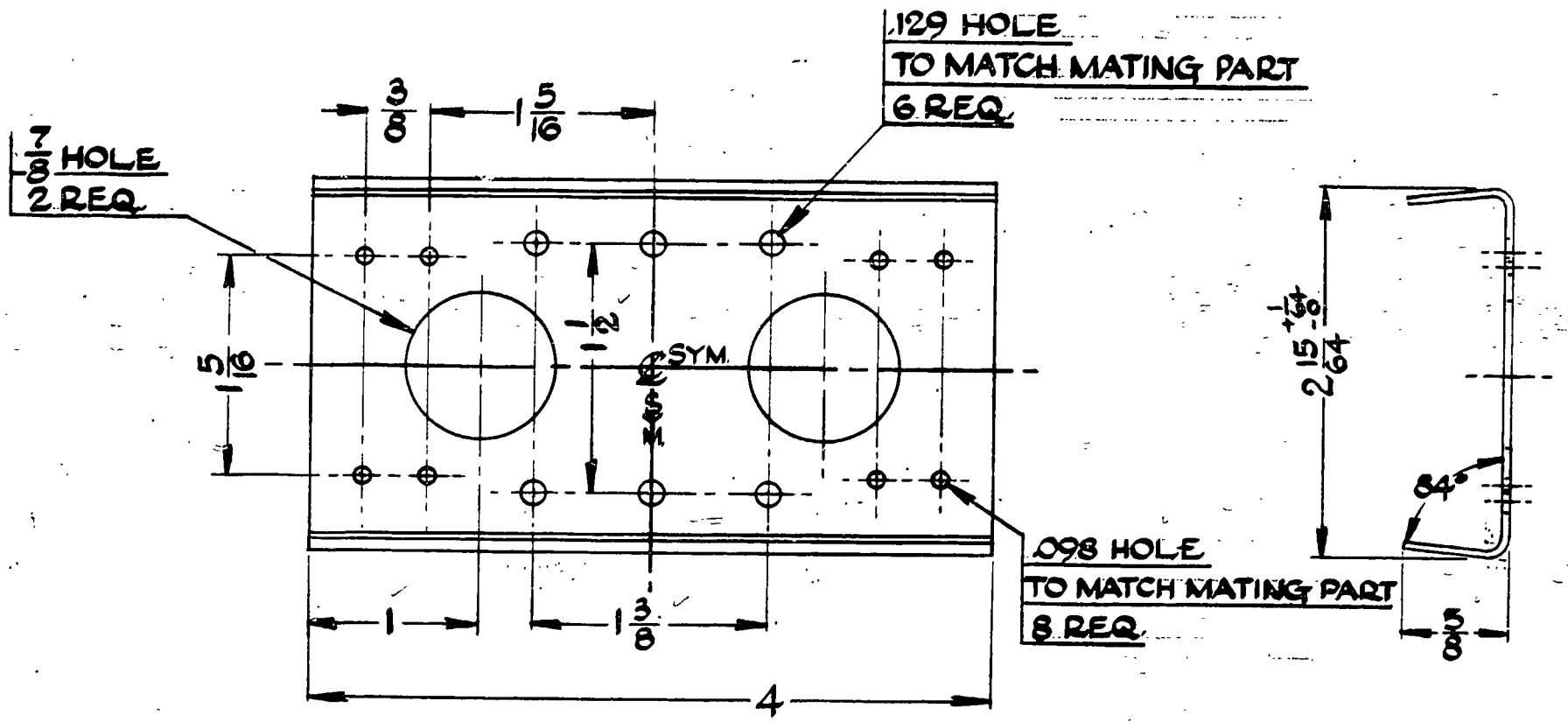

		.032 × 3½ × 4	#1025 STEEL
PART No.	No. REQ.	SIZE	DESCRIPTION
		MATERIAL	
SCALE FULL SIZE		TOTAL WT.—LBS.	

FINISH—PIPER SPECIFICATION #10

MANUFACTURING PRACTICES—PIPER SPECIFICATION #9

PLATE - FLAP HINGE REINFORCEMENT

LET.	REVISION	DATE	BY

THIS DRAWING IS THE PROPERTY OF THE PIPER AIRCRAFT CORP. AND ITS POSSESSION BY UNAUTHORIZED PERSONS SHALL NOT BE CONSTRUED AS PERMISSION TO REPRODUCE FOR SALE, IN WHOLE OR IN PART, ANY DEVICES SHOWN THEREON.

MODEL	PER PLANE	NEXT ASSEMBLY	SUPERSEDES	SUP. BY

PIPER AIRCRAFT CORP.
LOCK HAVEN, PENNA.

DRAFTSMAN	CHECKER	STANDARDS	
BC 1-21-48	H.R.K. 1-21-48		11676

PENCILTEX A. & B. SMITH CO., PGH., PA.

11676 78

A78

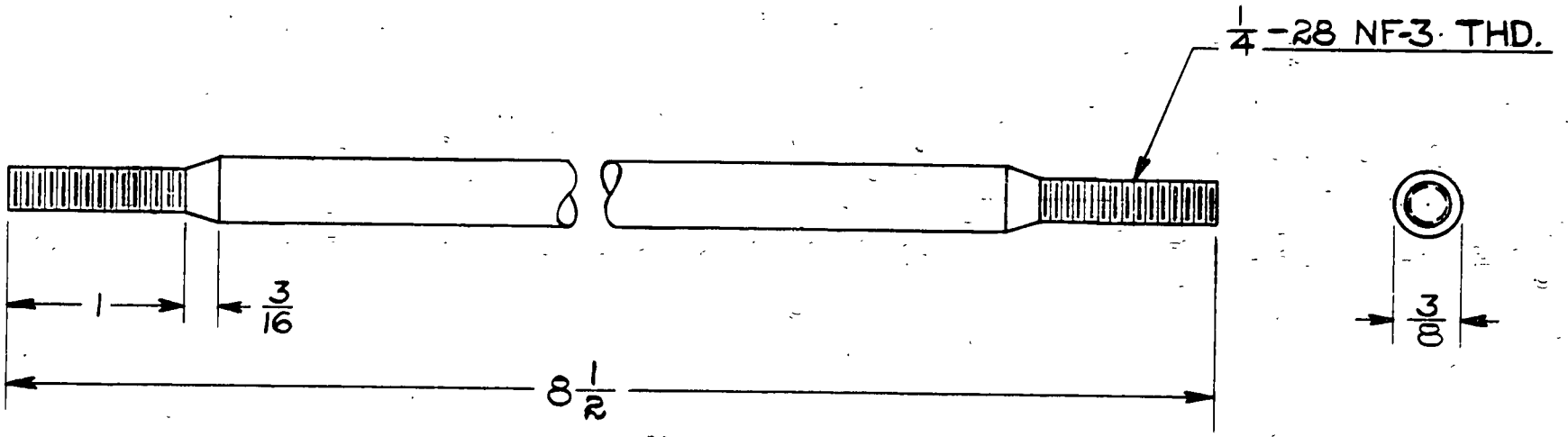

						3/8D. x 8 1/2	C.F. STEEL
					No. REQ.	SIZE	DESCRIPTION
					PART No.	MATERIAL	
					SCALE FULL SIZE		TOTAL WT.—LBS.
					FINISH—PIPER SPECIFICATION #10		
					MANUFACTURING PRACTICES—PIPER SPECIFICATION #9		

ROD — FLAP CONTROL

LET.	REVISION	DATE	BY

THIS DRAWING IS THE PROPERTY OF THE PIPER AIRCRAFT CORP. AND ITS POSSESSION BY UNAUTHORIZED PERSONS SHALL NOT BE CONSTRUED AS PERMISSION TO REPRODUCE FOR SALE, IN WHOLE OR IN PART, ANY DEVICES SHOWN THEREON.

MODEL	PER PLANE	NEXT ASSEMBLY	SUPERSEDES	SUP. BY

PIPER AIRCRAFT CORP.
LOCK HAVEN, PENNA.

DRAFTSMAN	CHECKER	STANDARDS
H.R.K. 1-21-48	J.C.B. 1-21-48	

11677

PENCILTEX A. & B. SMITH CO., PGH., PA.

A79

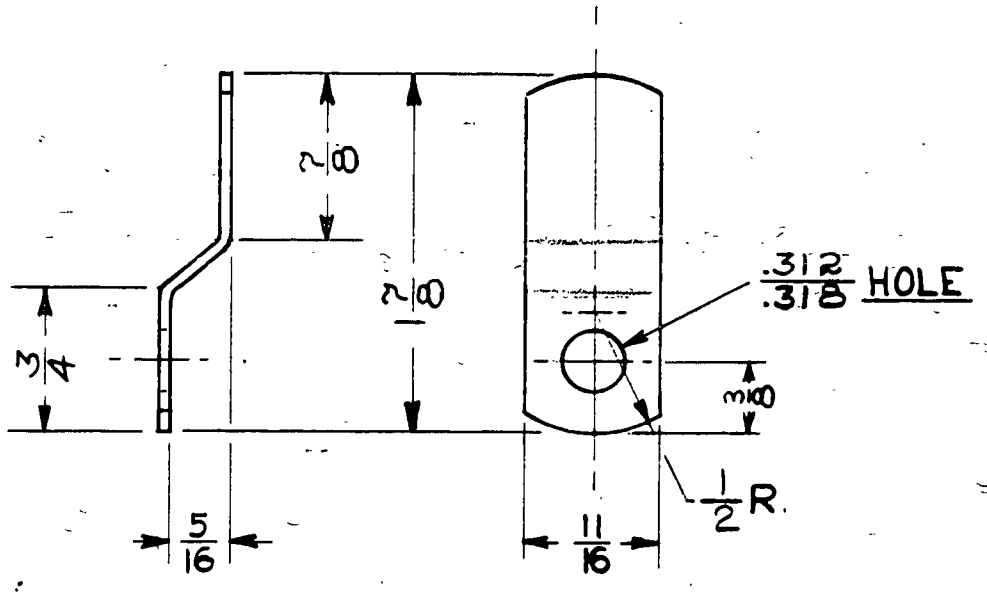

THIS DRAWING IS THE PROPERTY OF THE PIPER AIRCRAFT CORP. AND ITS POSSESSION BY UNAUTHORIZED PERSONS SHALL NOT BE CONSTRUED AS PERMISSION TO REPRODUCE FOR SALE, IN WHOLE OR IN PART, ANY DEVICES SHOWN THEREON.

LET.	REVISION	DATE	BY

MODEL	PER PLANE	NEXT ASSEMBLY	SUPERSEDES	SUP. BY

PIPER AIRCRAFT CORP.
LOCK HAVEN, PENNA.

PART No.	No. REQ.	SIZE	DESCRIPTION
		.062 x 11/16 x 2	#1025 STEEL
			MATERIAL

SCALE FULL SIZE — TOTAL WT.—LBS.

FINISH—PIPER SPECIFICATION #10

MANUFACTURING PRACTICES—PIPER SPECIFICATION #9

STOP — FLAP BELLCRANK

DRAFTSMAN	CHECKER	STANDARDS
H.R.K. 1-21-48	J.C.B. 1-21-48	

11678

PENCILTEX A. & B. SMITH CO., PGH., PA.

1.78 80

A80

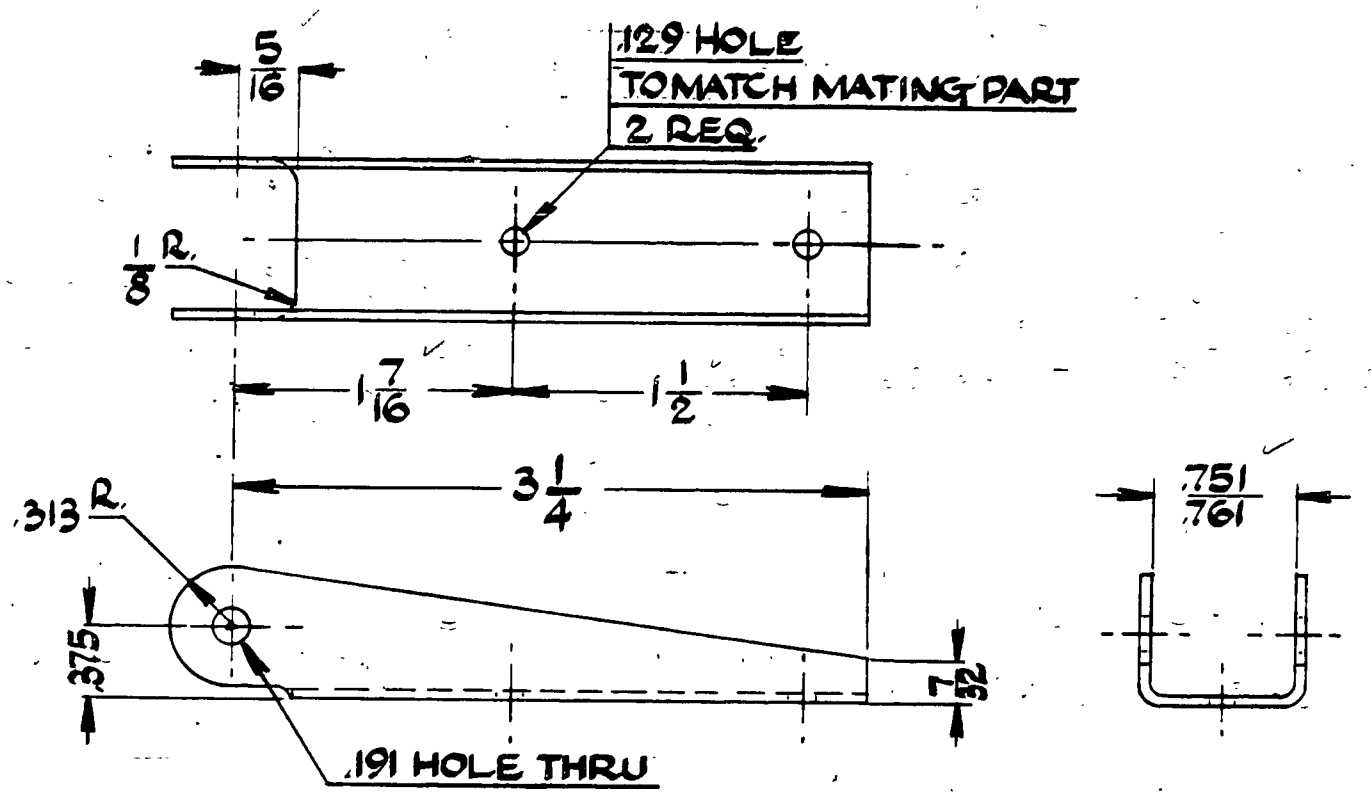

THIS DRAWING IS THE PROPERTY OF THE PIPER AIRCRAFT CORP. AND ITS POSSESSION BY UNAUTHORIZED PERSONS SHALL NOT BE CONSTRUED AS PERMISSION TO REPRODUCE FOR SALE, IN WHOLE OR IN PART, ANY DEVICES SHOWN THEREON.

LET.	REVISION	DATE	BY

MODEL	PER PLANE	NEXT ASSEMBLY	SUPERSEDES	SUP. BY

PIPER AIRCRAFT CORP.
LOCK HAVEN, PENNA.

PART No.	No. REQ.	.045 x 2 x 3 9/16 SIZE	#1025 STEEL DESCRIPTION
		MATERIAL	
SCALE FULL SIZE		TOTAL WT.—LBS.	

FINISH—PIPER SPECIFICATION #10

MANUFACTURING PRACTICES—PIPER SPECIFICATION #9

HINGE - FLAP OUTBOARD

DRAFTSMAN	CHECKER	STANDARDS	
RC 1-21-48	H.R.K. 1-21-48		11679

PENCILTEX A. & B. SMITH CO., PGH., PA.

81

A81

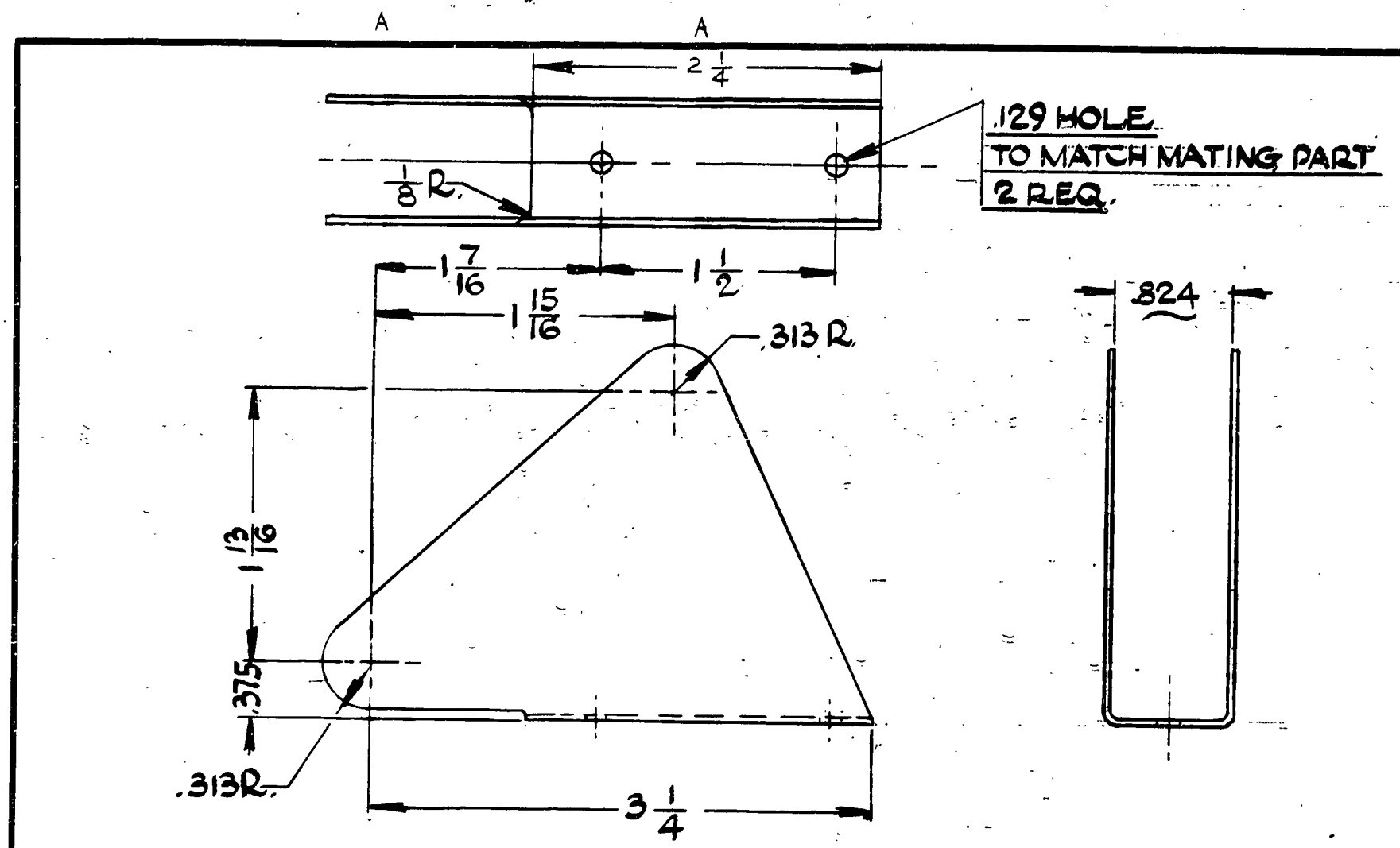

THIS DRAWING IS THE PROPERTY OF THE PIPER AIRCRAFT CORP. AND ITS POSSESSION BY UNAUTHORIZED PERSONS SHALL NOT BE CONSTRUED AS PERMISSION TO REPRODUCE FOR SALE, IN WHOLE OR IN PART, ANY DEVICES SHOWN THEREON.

PART No.	No. REQ.	SIZE	DESCRIPTION
		.045 × 39/16 × 5 7/8	#1025 STEEL
		MATERIAL	

SCALE FULL SIZE — TOTAL WT.—LBS.

FINISH—PIPER SPECIFICATION #10

MANUFACTURING PRACTICES—PIPER SPECIFICATION #9

HINGE-FLAP INBOARD

MODEL	PER PLANE	NEXT ASSEMBLY	SUPERSEDES	SUP. BY

LET.	REVISION	DATE	BY
A	HOLES .191 & .166 REMOVED	1-10-50	K.D.

PIPER AIRCRAFT CORP.
LOCK HAVEN, PENNA.

DRAFTSMAN	CHECKER	STANDARDS
R.C. 1-22-48	H.R.K. 1-23-48	

11680

PENCILTEX A. & B. SMITH CO., PGH., PA.

11620

82

A82

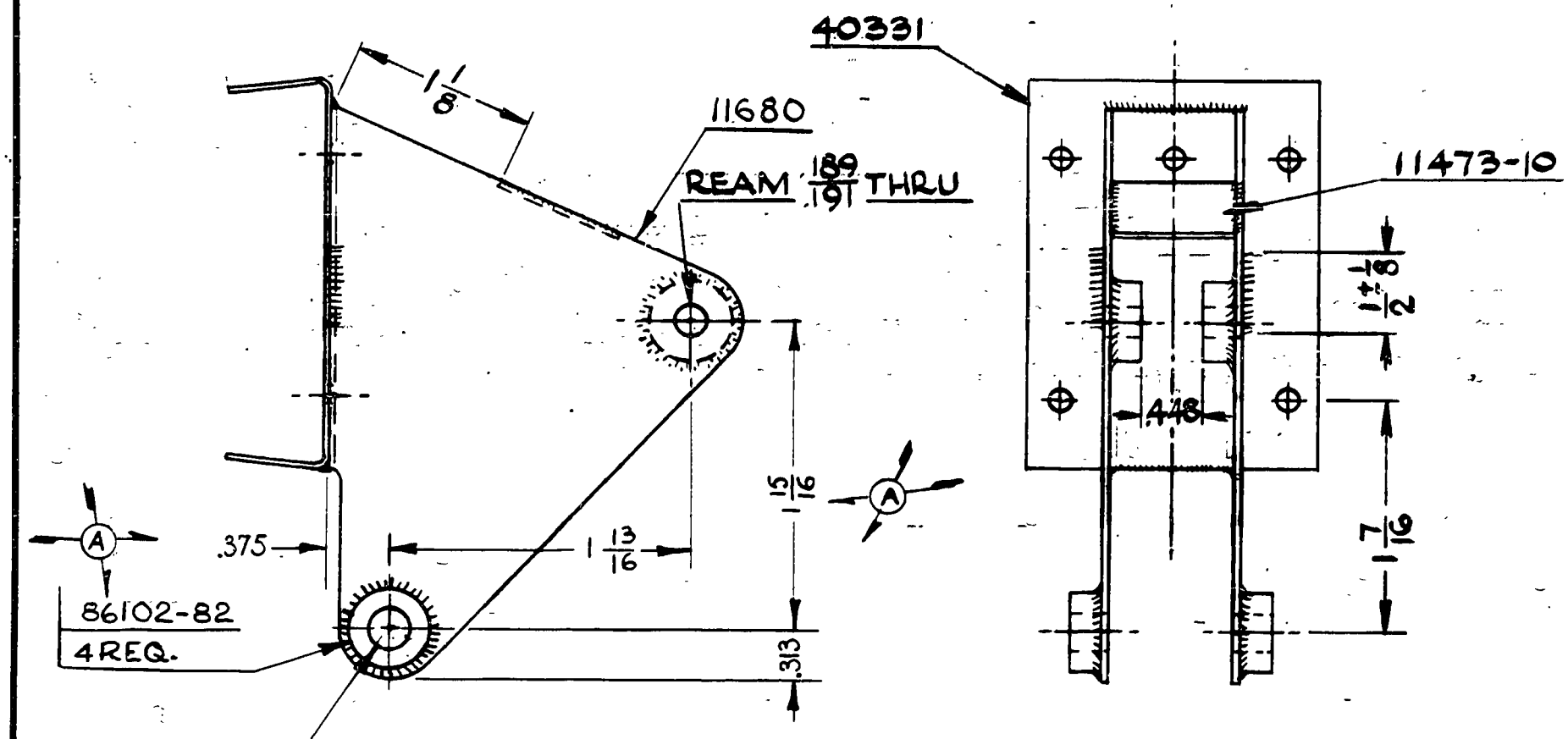

PART No.	No. REQ.	SIZE	DESCRIPTION
86102-82	4		BUSHING
40331	1		PLATE
11680	1		HINGE
11473-10	1		PLATE

MATERIAL

SCALE FULL SIZE | TOTAL WT.—LBS.

FINISH—PIPER SPECIFICATION #10

MANUFACTURING PRACTICES—PIPER SPECIFICATION #9

HINGE ASSEMBLY—FLAP INBOARD

THIS DRAWING IS THE PROPERTY OF THE PIPER AIRCRAFT CORP. AND ITS POSSESSION BY UNAUTHORIZED PERSONS SHALL NOT BE CONSTRUED AS PERMISSION TO REPRODUCE FOR SALE, IN WHOLE OR IN PART, ANY DEVICES SHOWN THEREON.

MODEL	PER PLANE	NEXT ASSEMBLY	SUPERSEDES	SUP. BY

LET.	REVISION	DATE	BY
A	86102-82 WAS 82732-3 BUSHING LOCATING DIMS. ADDED	1-10-50	K.D.

PIPER AIRCRAFT CORP.
LOCK HAVEN, PENNA.

DRAFTSMAN	CHECKER	STANDARDS
RC 1-22-48	H.R.K. 1-23-48	

11682

PENCILTEX A. B. SMITH CO., PGH., PA.

83

A83

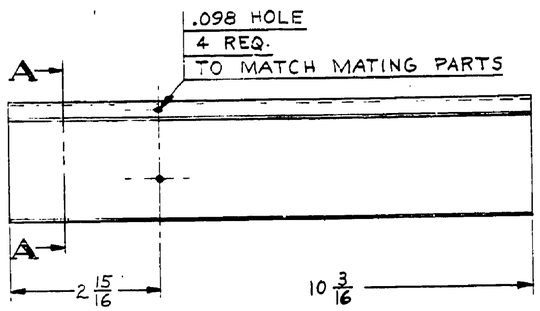

11683-2 L.H. SHOWN
11683-3 R.H. OPPOSITE

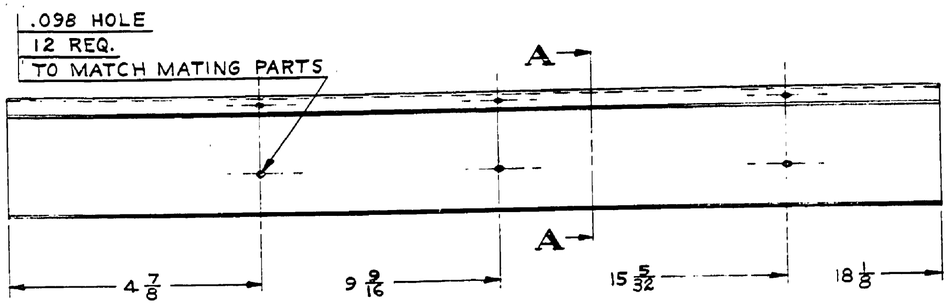

11683-4 L.H. SHOWN
11683-5 R.H. OPPOSITE

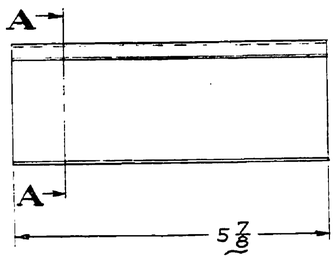

11683-6

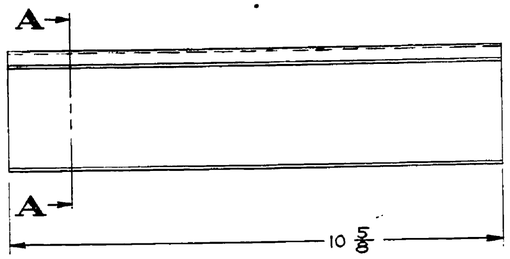

11683-7

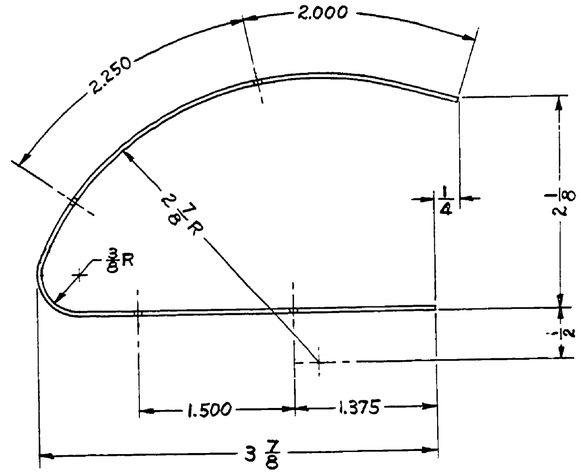

SECTION A-A
FULL SIZE

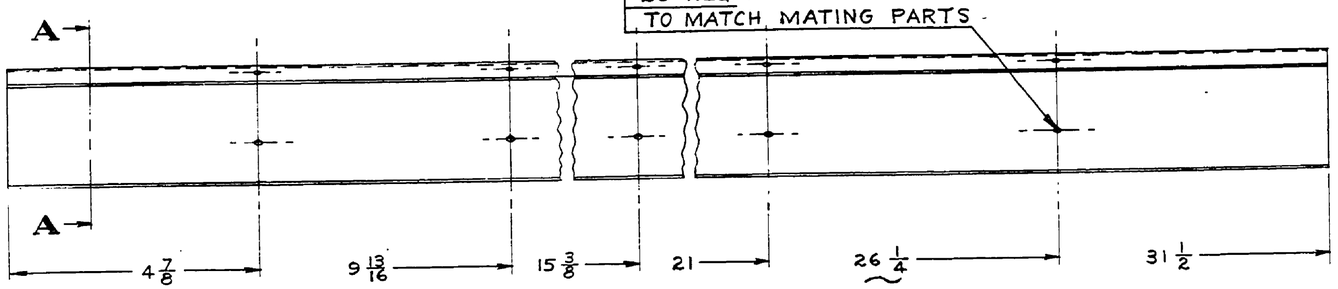

11683-8 L.H. SHOWN
11683-9 R.H. OPPOSITE

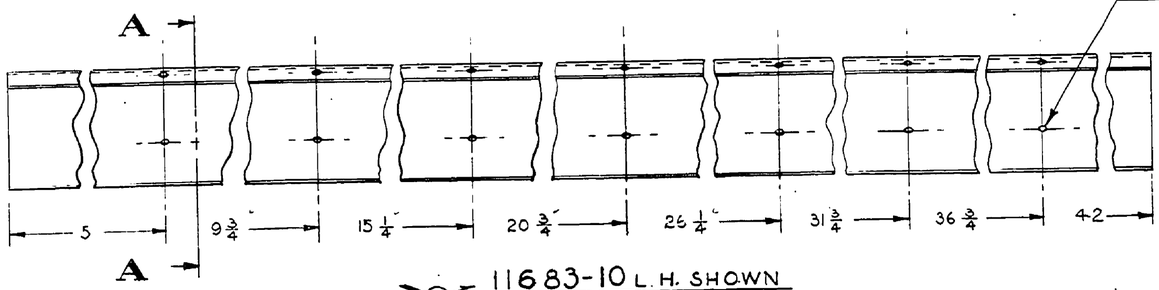

11683-10 L.H. SHOWN
11683-11 R.H. OPPOSITE

THIS DRAWING IS THE PROPERTY OF THE PIPER AIRCRAFT CORP. AND ITS POSSESSION BY UNAUTHORIZED PERSONS SHALL NOT BE CONSTRUED AS PERMISSION TO REPRODUCE FOR SALE, IN WHOLE OR IN PART, ANY DEVICES SHOWN THEREON

LET.	REVISION	DATE	BY
C	-10 & -11 ADDED	12-27-49	K.D.
B	REDRAWN & REVISED	6-30-49	C.K.

MODEL	PER PLANE	NEXT ASSEMBLY	SUPERSEDES	SUP. BY

PIPER AIRCRAFT CORP.
LOCK HAVEN, PENNA.

PART NO.	NO. REQ.	SIZE	MATERIAL
		.016 x 9 1/8 x NOTED	3S-1/2H. ALUM.

SCALE 6 IN. = 1 FT. & NOTED — TOTAL WT.—LBS.
FINISH—PIPER SPECIFICATION #10
MANUFACTURING PRACTICES—PIPER SPECIFICATION #9

COVER — FLAP
LEADING EDGE

DRAFTSMAN	CHECKER	STANDARDS
C. E. K. 6-30-49	H. R. K. 6-30-49	

11683

7/9

C

A719

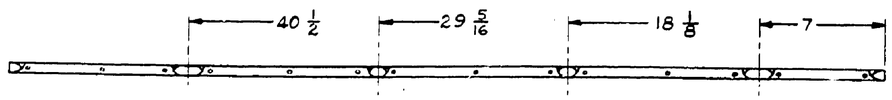

FIG. 2
2 IN. = 1 FT.

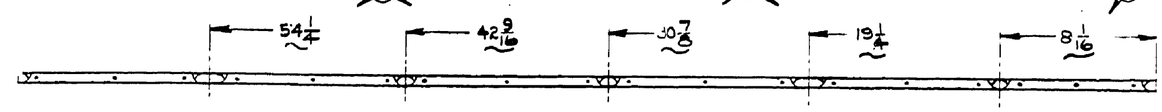

FIG. 1
2 IN. = 1 FT.

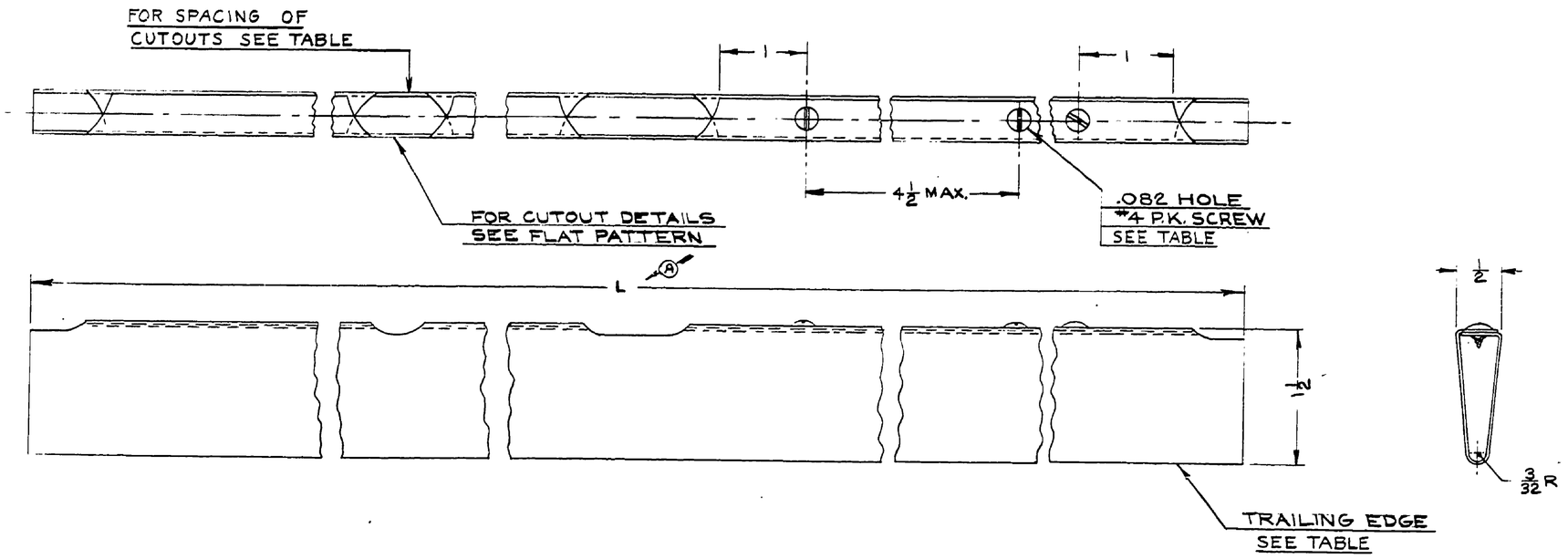

FLAT PATTERN

ASSY. NO.	TRAILING EDGE NO.	L	CUTOUT SPACING	NO. P. K. SCR. REQ.
11684	11684-2	65 5/16	SEE FIG. 1	18
11684-3	11684-4	52	SEE FIG. 2	14
11684-5	11684-6	62 1/2	SEE FIG. 3	17

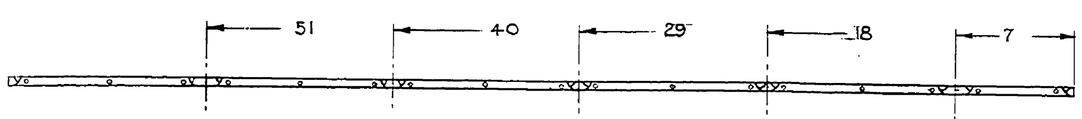

FIG. 3
2 IN. = 1 FT.

PART NO.	NO. REQ.	SIZE	DESCRIPTION
#4	SEE TABLE	1/4 LONG	TYPE "A" STOVE HD P.K. SCREW
-6	1	.020×4×NOTED	3S-1/2 H. ALUM.
-4		.020×4×NOTED	
-2		.020×4×NOTED	

MATERIAL

SCALE FULL SIZE & NOTED | TOTAL WT.—LBS.

FINISH—PIPER SPECIFICATION #10

MANUFACTURING PRACTICES—PIPER SPECIFICATION #9

LET.	REVISION	DATE	BY
D	1/4 LONG WAS 1/2 LONG	2-15-50	C.K.
C	-5, -6 & FIG. 3 ADDED	12-23-49	K.D.
B	-3, -4, FIG. 2 & TABLE ADDED	6-29-49	C.K.
A	8 7/16, 29 1/4, 30 7/8, 42 9/16, 54 1/4 WAS 5 1/4, 20 1/4, 31 1/8, 43 3/16, 55 1/4, RESP.; 65 5/16 WAS 66 5/16	2-17-49	R.M.

THIS DRAWING IS THE PROPERTY OF THE PIPER AIRCRAFT CORP. AND ITS POSSESSION BY UNAUTHORIZED PERSONS SHALL NOT BE CONSTRUED AS PERMISSION TO REPRODUCE FOR SALE, IN WHOLE OR IN PART, ANY DEVICES SHOWN THEREON

MODEL	PER PLANE	NEXT ASSEMBLY	SUPERSEDES	SUP. BY

PIPER AIRCRAFT CORP.
LOCK HAVEN, PENNA.

EDGE ASSEMBLY—FLAP TRAILING

DRAFTSMAN	CHECKER	STANDARDS
J.C.B. 1-30-48		

11684

720

A720

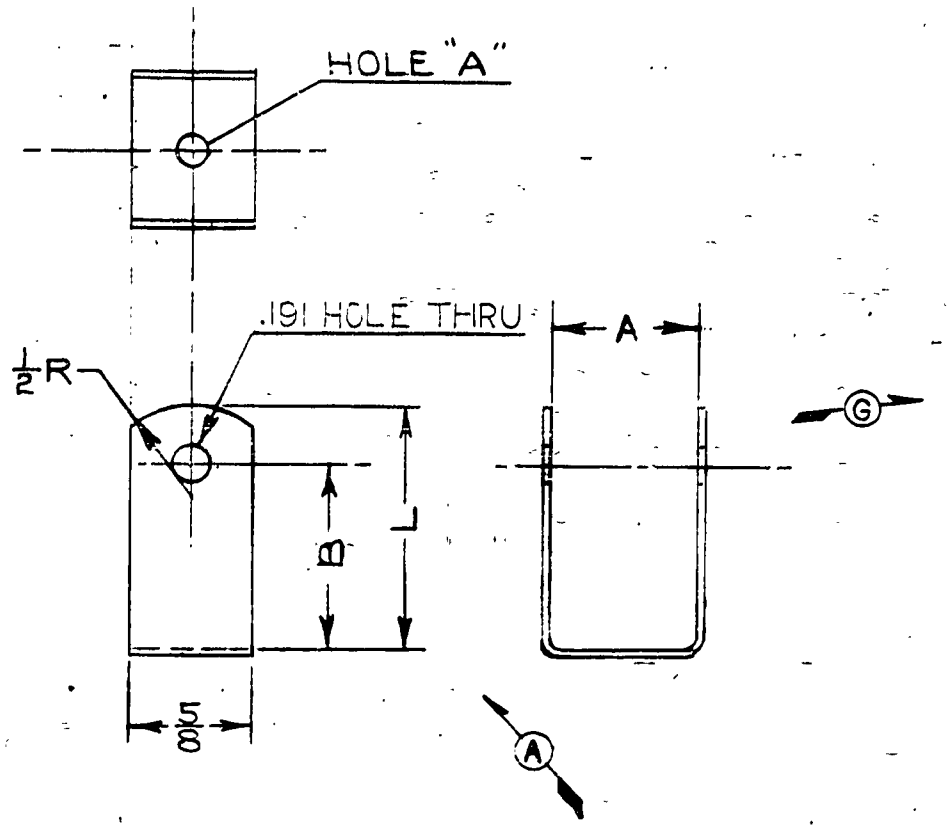

PART NO.	A	MAT'L.	HOLE "A"	B	L
11692	3/4	.045	——	15/16	1 1/4
11692-2	3/8	.045	——	15/16	1 1/4
11692-3	3/4	.062	——	15/16	1 1/4
11692-4	1	.095	——	15/16	1 1/4
11692-5	3/8	.045	.129	15/16	1 1/4
11692-6	3/8	.045	——	19/32	29/32

LET.	REVISION	DATE	BY
G	-6 ADDED	11-7-50	RM
F	-5 ADDED	8-31-50	F C S
E	.095 WAS .062 FOR -4	11-8-49	R.R.
D	-4 ADDED	7-7-49	C.K.
C	-3 ADDED	1-6-49	R.M.
B	-2 ADDED	4-16-48	HRK
A	15/16 WAS 1; 1 1/4 WAS 1 5/16	3-10-48	HRK

MODEL | PER PLANE | NEXT ASSEMBLY | SUPERSEDES | SUP. BY

THIS DRAWING IS THE PROPERTY OF THE PIPER AIRCRAFT CORP. AND ITS POSSESSION BY UNAUTHORIZED PERSONS SHALL NOT BE CONSTRUED AS PERMISSION TO REPRODUCE FOR SALE, IN WHOLE OR IN PART, ANY DEVICES SHOWN THEREON.

PIPER AIRCRAFT CORP.
LOCK HAVEN, PENNA.

NOTED x 5/8 x NOTED | #1025 STEEL

PART NO. | No. REQ. | SIZE | DESCRIPTION | MATERIAL

SCALE FULL SIZE | TOTAL WT.—LBS.

FINISH—PIPER SPECIFICATION #10

MANUFACTURING PRACTICES—PIPER SPECIFICATION #9

BRACKET-PULLEY

DRAFTSMAN	CHECKER	STANDARDS
R.T.M. 1-26-48	H.R.K. 1-29-48	

11692

84

A84

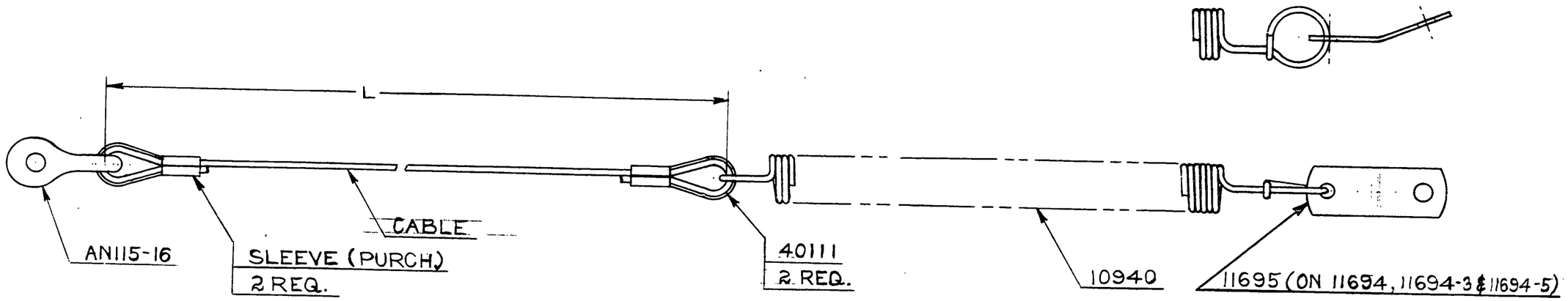

NOTE:
SEE DRAWING 42521 FOR CABLE SLEEVE SPLICE.

ASSY. NO.	L	CABLE MATERIAL	REMARKS
11694	6½	1/16 DIA. 7×7 GAL. AIRCRAFT CORD	SHOWN
11694-2	4½	1/16 DIA. 7×7 GAL. AIRCRAFT CORD	LINK 11695 OMITTED
11694-3	4½	1/16 DIA. 7×7 GAL. AIRCRAFT CORD	SHOWN
11694-4	4½	1/16 DIA. 7×7 FLEX. ST. STL. AIRCRAFT CABLE	LINK 11695 OMITTED (USED ON SEAPLANES)
11694-5	4½	1/16 DIA. 7×7 FLEX. ST. STL. AIRCRAFT CABLE	SHOWN (USED ON SEAPLANES)

PART NO.	No. REQ.	SIZE	DESCRIPTION / MATERIAL
42521	REF		CABLE SLEEVE SPLICE
	2	18-1-C	SLEEVE PURCH. NATIONAL TELEPHONE SUPPLY CO.
AN115-16	1		SHACKLE
	1		CABLE (SEE TABLE)
40111	2		THIMBLE
11695	1		LINK (ON 11694, 11694-3 & 11694-5 ONLY)
10940	1		SPRING

SCALE FULL SIZE — TOTAL WT.—LBS.
FINISH—PIPER SPECIFICATION #10
MANUFACTURING PRACTICES—PIPER SPECIFICATION #9

LET.	REVISION	DATE	BY
D	-5 ADDED	5-4-50	HRK
C	-4 ADDED	4-6-50	HRK
B	-3 ADDED	1-3-50	J.O.
A	-2 ADDED	6-30-49	RM

MODEL | PER PLANE | NEXT ASSEMBLY | SUPERSEDES | SUP. BY

THIS DRAWING IS THE PROPERTY OF THE PIPER AIRCRAFT CORP. AND ITS POSSESSION BY UNAUTHORIZED PERSONS SHALL NOT BE CONSTRUED AS PERMISSION TO REPRODUCE FOR SALE, IN WHOLE OR IN PART, ANY DEVICES SHOWN THEREON.

PIPER AIRCRAFT CORP.
LOCK HAVEN, PENNA.

CABLE ASSEMBLY—FLAP RETURN

DRAFTSMAN	CHECKER	STANDARDS	
H.R.K. 1-30-48	J.C.B. 2-4-48		11694

A474

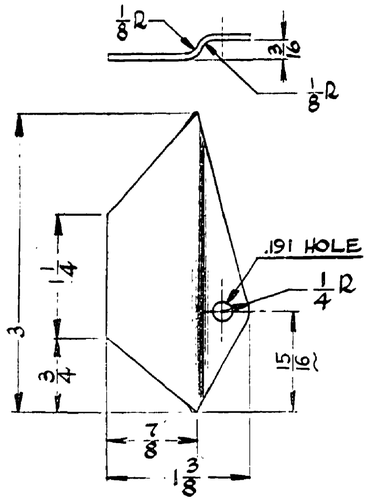

DETAIL -4 SHOWN
-5 OPPOSITE

80342-18	1	STRAP	
-5	1	.062 × 1 5/8 × 3	#1025 ST'L.
-4	1		
-3	1	3/4 × 049 × 16 5/8	#4130 S.S.T.
-2	1	3/4 × 065 × 18 1/4	#1025 S.S.T.
PART No.	No. REQ.	SIZE	DESCRIPTION
		MATERIAL	
SCALE FULL SIZE		TOTAL WT.—LBS.	

FINISH—PIPER SPECIFICATION #10

MANUFACTURING PRACTICES—PIPER SPECIFICATION #9

THIS DRAWING IS THE PROPERTY OF THE PIPER AIRCRAFT CORP. AND ITS POSSESSION BY UNAUTHORIZED PERSONS SHALL NOT BE CONSTRUED AS PERMISSION TO REPRODUCE FOR SALE, IN WHOLE OR IN PART, ANY DEVICES SHOWN THEREON

LET.	REVISION	DATE	BY
B	34° WAS 18°	6-29-48	RM
A	3/8 WAS 5/8 & 18 1/4 WAS 18 1/2	4-7-48	RC

MODEL	PER PLANE	NEXT ASSEMBLY	SUPERSEDES	SUP. BY

PIPER AIRCRAFT CORP.
LOCK HAVEN, PENNA.

LEVER ASSEMBLY—
FLAP CONTROL

DRAFTSMAN	CHECKER	STANDARDS
RC 1-30-48	H. R. K. 2-3-48	

11697

B A A

721

A721

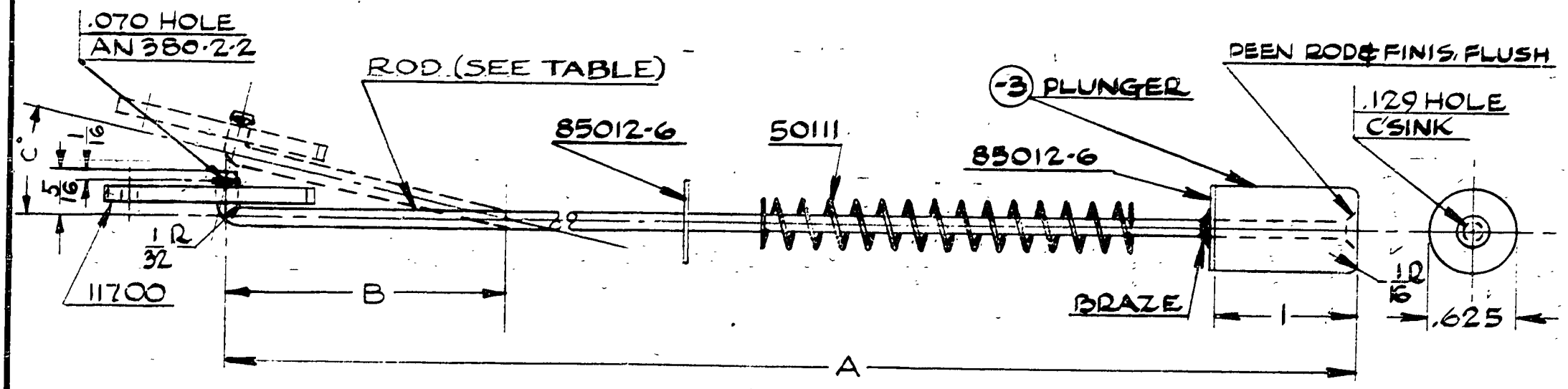

ASSY. NO.	ROD NO.	A	B	C°	REMARKS
11699	11699-2	14 3/8	–	–	SHOWN
11699-5	11699-4	11 3/8	–	–	SHOWN
11699-6	11699-7	14 3/8	2	13°	SHOWN DOTTED

-3	1	5/8 DIA x 1	2S ALUM.
AN 380-2-2	1	COTTER PIN	
85012-6	2	WASHER	
50111	1	SPRING	
11700	1	PAWL	
-4	1	1/8 DIA. x 11 7/8	WELDING ROD
-2		1/8 DIA. x 14 7/8	WELDING ROD
-7			
PART NO.	No. REQ.	SIZE	DESCRIPTION
		MATERIAL	

LET.	REVISION	DATE	BY
B	-6 & -7 ADDED.	12-29-48	J.S.O.
A	-4 & -5 ADDED	7-21-48	HRK

MODEL | PER PLANE | NEXT ASSEMBLY | SUPERSEDES | SUP. BY

THIS DRAWING IS THE PROPERTY OF THE PIPER AIRCRAFT CORP. AND ITS POSSESSION BY UNAUTHORIZED PERSONS SHALL NOT BE CONSTRUED AS PERMISSION TO REPRODUCE FOR SALE, IN WHOLE OR IN PART. ANY DEVICES SHOWN THEREON.

PIPER AIRCRAFT CORP.
LOCK HAVEN, PENNA.

SCALE FULL SIZE | TOTAL WT.–LBS.

FINISH–PIPER SPECIFICATION #10

MANUFACTURING PRACTICES–PIPER SPECIFICATION #9

PLUNGER ASSEMBLY– FLAP CONTROL

DRAFTSMAN	CHECKER	STANDARDS	
R.C. 1-30-48	H.R.K. 2-3-48		11699

A85

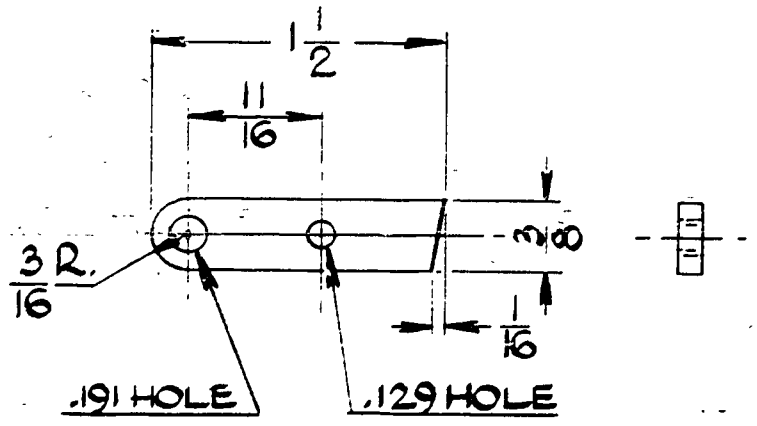

PART No.	No. REQ.	SIZE	DESCRIPTION
		.125 x 3/8 x 1 1/2	#1025 ST'L.

MATERIAL

SCALE FULL SIZE | TOTAL WT.—LBS.

FINISH—PIPER SPECIFICATION #10

MANUFACTURING PRACTICES—PIPER SPECIFICATION #9

MODEL	PER PLANE	NEXT ASSEMBLY	SUPERSEDES	SUP. BY

THIS DRAWING IS THE PROPERTY OF THE PIPER AIRCRAFT CORP. AND ITS POSSESSION BY UNAUTHORIZED PERSONS SHALL NOT BE CONSTRUED AS PERMISSION TO REPRODUCE FOR SALE, IN WHOLE OR IN PART, ANY DEVICES SHOWN THEREON.

PAWL-FLAP CONTROL PLUNGER

LET.	REVISION	DATE	BY

PIPER AIRCRAFT CORP.
LOCK HAVEN, PENNA.

DRAFTSMAN	CHECKER	STANDARDS
RC 1.30.48	H. R. K. 2-3-48	

1 1700

86

A86

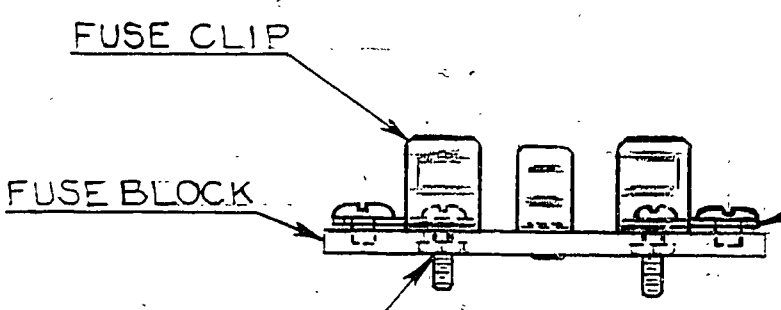

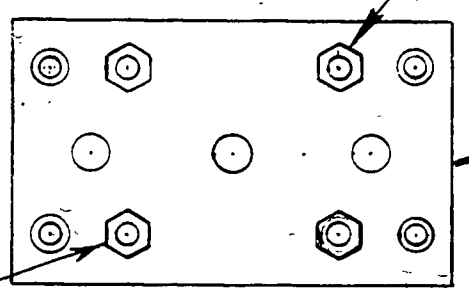

REPLACE RIVETS WITH
#4-40 x 3/8 L. MACH. SCREW
& PLAIN HEX NUT.
4 REQ.

	1	FUSE BLOCK 4632 PURCH. COLE HERSEE	
#4	4	#1010 STL. CAD. PLATED HEX. NUT	
#4-40	4	3/8 L	#1010 STL. CAD. PLATED RD. HD. MACH. SCR.
PART No.	No. REQ.	SIZE	DESCRIPTION
		MATERIAL	

SCALE FULL SIZE — TOTAL WT.–LBS.

FINISH–PIPER SPECIFICATION #10

MANUFACTURING PRACTICES–PIPER SPECIFICATION #9

MODEL	PER PLANE	NEXT ASSEMBLY	SUPERSEDES	SUP. BY

THIS DRAWING IS THE PROPERTY OF THE PIPER AIRCRAFT CORP. AND ITS POSSESSION BY UNAUTHORIZED PERSONS SHALL NOT BE CONSTRUED AS PERMISSION TO REPRODUCE FOR SALE, IN WHOLE OR IN PART. ANY DEVICES SHOWN THEREON.

LET.	REVISION	DATE	BY
A	NOTE REVISED	3-26-48	HRK

PIPER AIRCRAFT CORP.
LOCK HAVEN, PENNA.

BLOCK ASSEMBLY – FUSE

R.T.M.	H.R.K.		
2-26-48	2-26-48		11718
DRAFTSMAN	CHECKER	STANDARDS	

87

A87

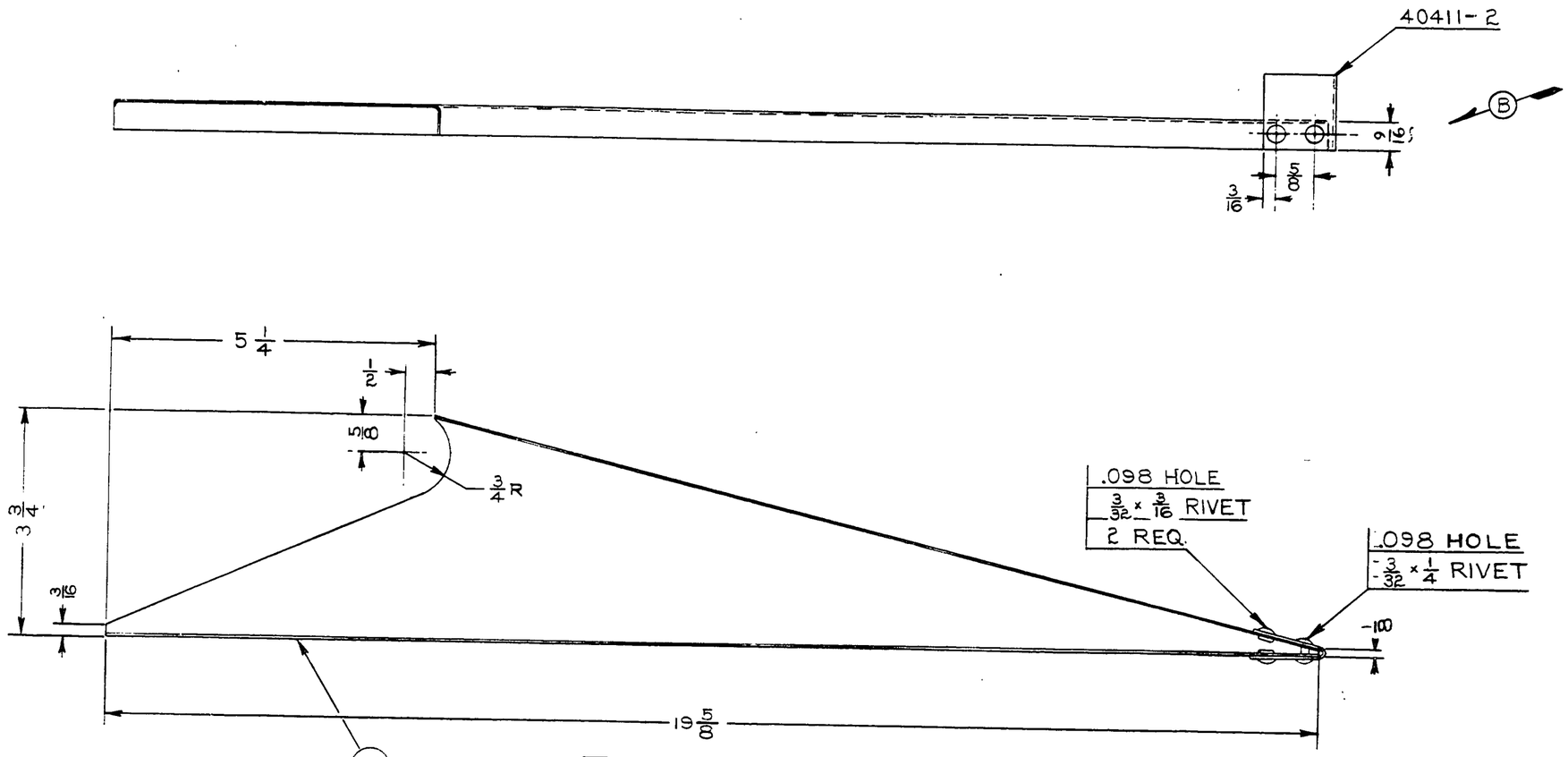

PARTS MARKED L USED ON LH ASSY ONLY
PARTS MARKED R USED ON RH ASSY ONLY

11719 LH. SHOWN
11719-1 RH. OPPOSITE

PART No.	No. REQ.	SIZE	DESCRIPTION
		MATERIAL	
40411-2	1	REINFORCEMENT	
	1	3/32 x 1/4	2S ALUM. RIVET
	2	3/32 x 3/16	2S ALUM. RIVET
-3 -2	1	.025 x 4 7/8 x 19 5/8	3S-1/2H ALUM.

SCALE 6 IN. = 1 FT | TOTAL WT.-LBS.
FINISH—PIPER SPECIFICATION #10
MANUFACTURING PRACTICES—PIPER SPECIFICATION #9

LET.	REVISION	DATE	BY
B	9/16 WAS 1/2	10-16-50	FCS
A	REDRAWN & REVISED	12-21-48	RTM

MODEL | PER PLANE | NEXT ASSEMBLY | SUPERSEDES | SUP. BY

THIS DRAWING IS THE PROPERTY OF THE PIPER AIRCRAFT CORP. AND ITS POSSESSION BY UNAUTHORIZED PERSONS SHALL NOT BE CONSTRUED AS PERMISSION TO REPRODUCE FOR SALE, IN WHOLE OR IN PART. ANY DEVICES SHOWN THEREON.

PIPER AIRCRAFT CORP.
LOCK HAVEN, PENNA.

PLATE ASSEMBLY—
WING BUTT RIB

DRAFTSMAN	CHECKER	STANDARDS
R.T.M. 12-21-48.		

11719

475

A475

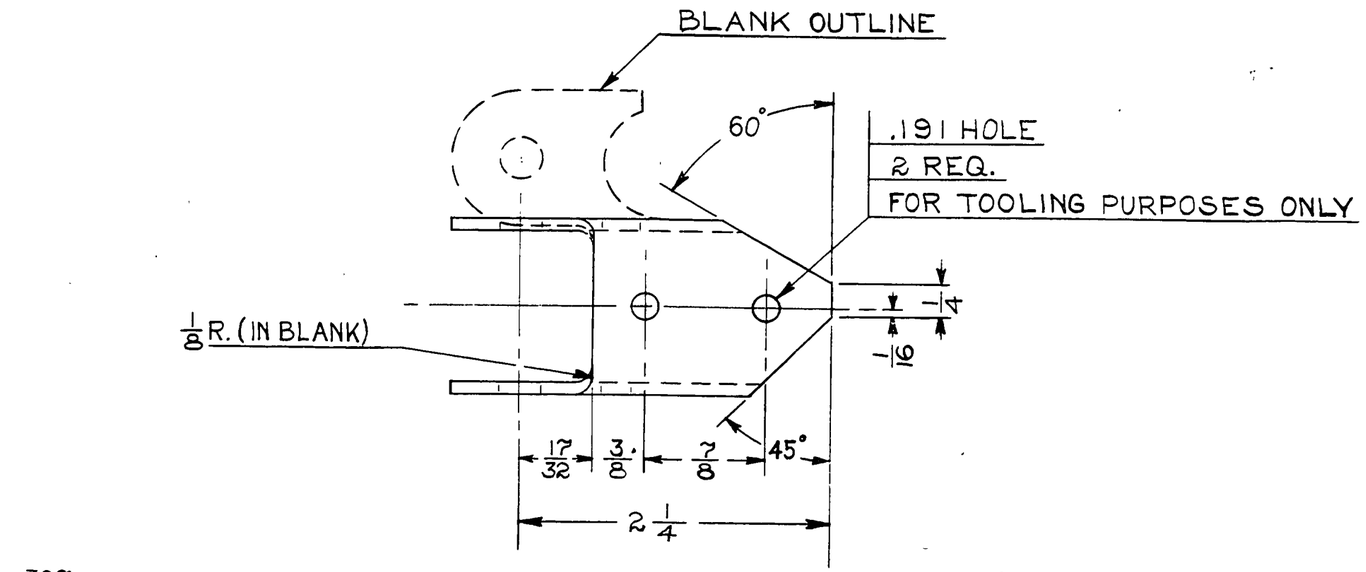

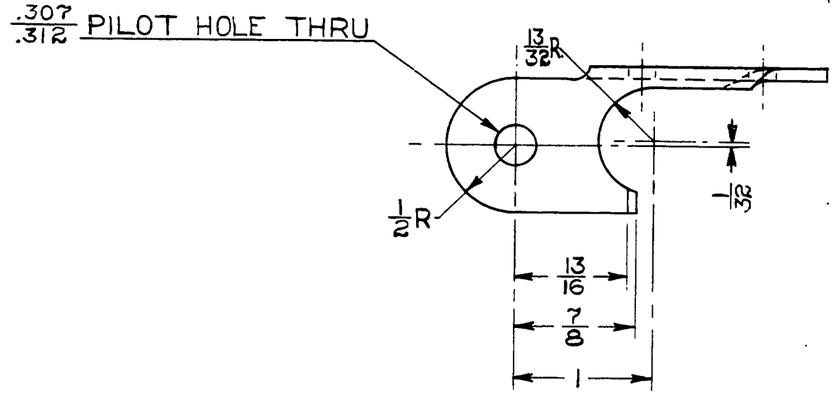

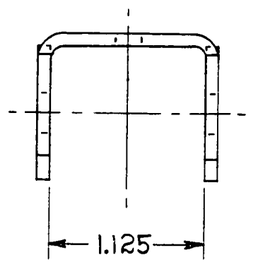

11821 L.H. SHOWN
11821-1 R.H. OPPOSITE

LET.	REVISION	DATE	BY

MODEL	PER PLANE	NEXT ASSEMBLY	SUPERSEDES	SUP. BY

THIS DRAWING IS THE PROPERTY OF THE PIPER AIRCRAFT CORP. AND ITS POSSESSION BY UNAUTHORIZED PERSONS SHALL NOT BE CONSTRUED AS PERMISSION TO REPRODUCE FOR SALE, IN WHOLE OR IN PART, ANY DEVICES SHOWN THEREON.

PIPER AIRCRAFT CORP.
LOCK HAVEN, PENNA.

PART No.	No. REQ.	SIZE	MATERIAL
		.095 x 2 3/4 x 3 3/16	#1025 STEEL

SCALE FULL SIZE — TOTAL WT.—LBS.

FINISH—PIPER SPECIFICATION #10

MANUFACTURING PRACTICES—PIPER SPECIFICATION #9

FITTING – FUSELAGE REAR WING HINGE

DRAFTSMAN	CHECKER	STANDARDS
H.R.K. 5-20-48	J.C.B. 5-24-48	

11821

42*

A476

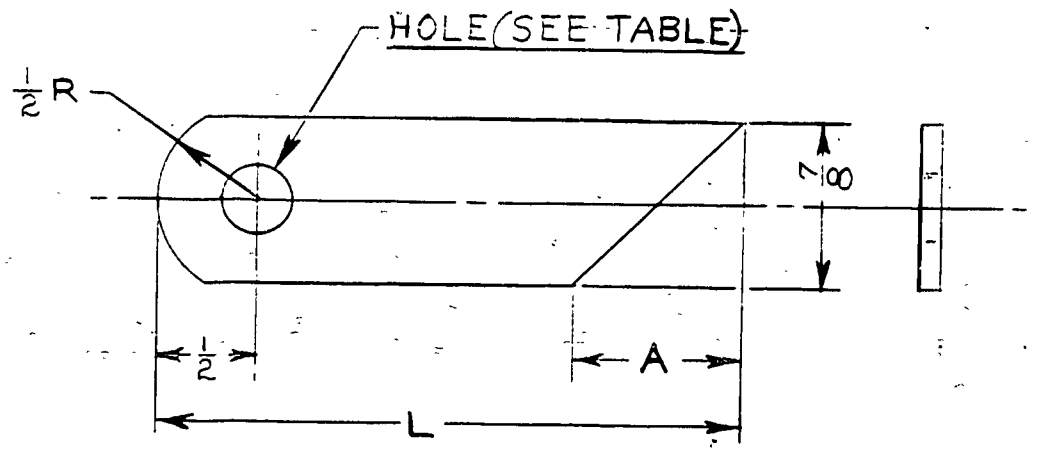

	PART NO.	L	HOLE	A
A	11829	3	.374/.385	7/8
B	11829-2	3 5/8	.249/.255	7/8
C	11829-3	3 5/8	.374/.385	7/8
	11829-4	2 5/8	.374/.385	5/16
E	11829-5	3	.249/.251	3/4

LET.	REVISION	DATE	BY
F	2 5/8 WAS 3 ON -4	11-1-50	C.K.
E	-5 ADDED	8-24-50	FCS
D	-4 ADDED; "A" ADDED	8-9-50	JCB
C	-3 ADDED. 3 5/8 WAS 3 1/2 ON -2	11-11-49	C.K.
B	.249/.255 WAS .374/.385 ON -2	5-25-49	C.K.
A	-2 ADDED	2-8-49	RM

MODEL	PER PLANE	NEXT ASSEMBLY	SUPERSEDES	SUP. BY

THIS DRAWING IS THE PROPERTY OF THE PIPER AIRCRAFT CORP. AND ITS POSSESSION BY UNAUTHORIZED PERSONS SHALL NOT BE CONSTRUED AS PERMISSION TO REPRODUCE FOR SALE, IN WHOLE OR IN PART. ANY DEVICES SHOWN THEREON.

PIPER AIRCRAFT CORP.
LOCK HAVEN, PENNA.

PART No.	No. REQ.	SIZE	DESCRIPTION
		.095 x 7/8 x NOTED	1025 STEEL
		MATERIAL	

SCALE FULL SIZE — TOTAL WT.–LBS.

FINISH–PIPER SPECIFICATION #10

MANUFACTURING PRACTICES–PIPER SPECIFICATION #9

PLATE - SAFETY BELT ATTACHMENT

R.T.M.	H.R.K.		
4-30-48	5-3-48		11829
DRAFTSMAN	CHECKER	STANDARDS	

11829 88

A88

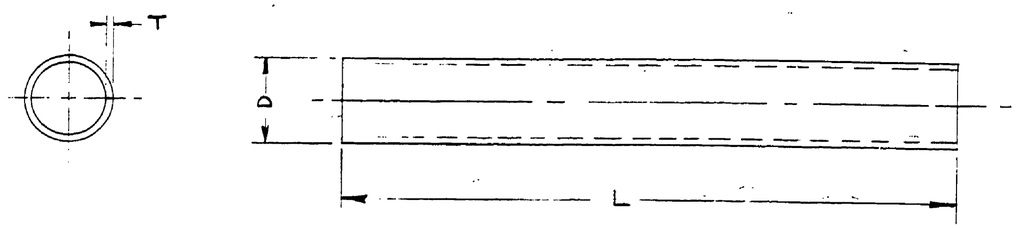

NOTE
TUBE ENDS NIBBLED
OR CUT TO FIT.

PART NO.	D	T	L	MATERIAL	REMARKS
11857-2	1/2	.028	10 1/2	#1025 STL.	
11857-3	3/4	.035	109	#1025 STL.	
11857-4	3/4	.035	109	#1025 STL.	
11857-5	3/4	.035	9 1/2	#4130 STL.	
11857-6	3/4	.035	9 1/2	#4130 STL.	
11857-7	3/4	.035	19 1/2	#4130 STL.	
11857-8	3/4	.035	19 1/2	#4130 STL.	
11857-9	3/4	.035	38	#4130 STL.	
11857-10	3/4	.035	38	#4130 STL.	
11857-11	3/4	.035	31 1/2	#4130 STL.	
11857-12	5/8	.035	16 3/4	#4130 STL.	
11857-13	5/8	.035	16 3/4	#4130 STL.	
11857-14	5/8	.035	16 1/2	#4130 STL.	
11857-15	3/4	.035	26	#4130 STL.	
11857-16	3/4	.035	33	#4130 STL.	
11857-17	5/8	.035	28	#4130 STL.	
11857-18	5/8	.035	28	#4130 STL.	
11857-19	5/8	.035	29 1/2	#4130 STL.	
11857-20	5/8	.035	29 1/2	#4130 STL.	
11857-21	5/8	.035	10	#4130 STL.	
11857-22	5/8	.035	10	#4130 STL.	
11857-23	5/8	.035	30	#4130 STL.	
11857-24	5/8	.035	37	#1025 STL.	
11857-25	5/8	.035	34	#4130 STL.	
11857-26	5/8	.035	35 1/2	#1025 STL.	
11857-27	1/2	.035	28	#1025 STL.	
11857-28	1/2	.035	37	#1025 STL.	
11857-29	1/2	.028	18 3/4	#1025 STL.	
11857-30	3/8	.035	27 1/2	#1025 STL.	
11857-31	5/8	.035	32 1/2	#1025 STL.	
11857-32	3/8	.035	2 1/4	#1025 STL.	
11857-33	3/8	.035	8 1/2	#1025 STL.	
11857-34	1/2	.028	12 1/2	#1025 STL.	

PART NO.	D	T	L	MATERIAL	REMARKS
11857-35	1/2	.028	8 3/4	#1025 STL.	
11857-36	1/2	.028	8 3/4	#1025 STL.	
11857-37	3/4	.035	161	#1025 STL.	
11857-38	3/4	.035	161	#1025 STL.	
11857-39	5/8	.035	30	#4130 STL.	
11857-40	5/8	.035	30	#4130 STL.	
11857-41	1/2	.035	16 1/2	#1025 STL.	
11857-42	1/2	.035	16 1/2	#1025 STL.	
11857-43	3/4	.035	43	#1025 STL.	
11857-44	3/4	.035	43	#1025 STL.	
11857-45	1/2	.035	41	#1025 STL.	
11857-46	1/2	.028	21 1/2	#1025 STL.	
11857-47	1/2	.028	40 1/2	#1025 STL.	
11857-48	3/4	.035	10	#1025 STL.	
11857-49	1/2	.028	18 1/2	#1025 STL.	
11857-50	3/8	.035	7 3/4	#1025 STL.	
11857-51	PIPER SECTION 10097		37	PIPER SECTION 10097	
11857-52	1/2	.065	1 1/2	#1025 STL.	
11857-53	3/4	.065	4	#1025 STL.	
11857-54	1/2	.035	4	#1025 STL.	
11857-55	1/2	.035	4	#1025 STL.	
11857-56	3/8	.035	4 3/4	#1025 STL.	
11857-57	5/8	.058	11 1/2	#4130 STL.	
11857-58	7/8	.035	37 1/2	#4130 STL.	
11857-59	3/4	.035	63	#4130 STL.	
11857-60	3/4	.035	63	#4130 STL.	
11857-61	5/8	.035	9 1/4	#1025 STL.	
11857-62	5/8	.035	12	#1025 STL.	
11857-63	7/8	.035	45 1/2	#4130 STL.	
11857-64	1	.035	34	#4130 STL.	
11857-65	3/4	.035	48 1/2	#4130 STL.	
11857-66	3/4	.035	48 1/2	#4130 STL.	
11857-67	3/4	.035	34 1/4	#4130 STL	

PART NO.	D	T	L	MATERIAL	REMARKS
11857-68	3/4	.035	14 1/2	#1025 STL.	
11857-69	3/4	.049	2 3/8	#4130 SST.	
11857-70	3/4	.049	1 3/4	#1025 STL.	
11857-71	3/4	.035	28	#4130 STL.	
11857-72	3/4	.035	24	#1025 STL.	
11857-73	1/2	.035	10	#1025 STL.	
11857-74	1/2	.035	4 3/4	#1025 STL.	
11857-75	3/8	.035	4 3/4	#1025 STL.	
11857-76	1/2	.035	16 1/2	#1025 STL.	
11857-77	5/8	.035	21 1/4	#4130 STL.	
11857-78	5/8	.035	21 1/4	#4130 STL.	
11857-79	5/8	.035	22 1/2	#4130 STL.	
11857-80	5/8	.035	22 1/2	#4130 STL.	
11857-81	3/4	.035	36	#4130 STL.	
11857-82	1/2	.028	11	#1025 STL.	
11857-83	3/4	.035	27	#1025 STL.	
11857-84	5/8	.035	29	#1025 STL.	
11857-85	3/8	.028	20	#1025 STL.	
11857-86	1/2	.028	4 1/4	#1025 STL.	
11857-87	1/2	.028	4	#1025 STL.	
11857-88	5/8	.035	19 1/4	#1025 STL.	
11857-89	5/8	.035	15 1/2	#1025 STL.	
11857-90	5/8	.028	7 1/2	#1025 STL.	
11857-91	1 1/8	.049	19 1/2	#4130 STEEL	
11857-92	1 1/8	.049	19 1/2	#4130 STEEL	
11857-93	3/8	.035	1 5/8	#1025 STEEL	
11857-94	3/8	.035	36	#1025 STEEL	
11857-95	3/8	.028	20 1/2	#1025 STEEL	
11857-96	5/8	.028	32 15/16	#1025 STEEL	
11857-97	1/2	.035	7	#1025 STEEL	
11857-98	1/2	.035	7	#1025 STEEL	

LET.	REVISION	DATE	BY
K	-97 & -98 ADDED	8-10-50	C.K.
J	-95, -96 ADDED	11-9-49	K.B.
H	-91, -92, -93, -94 ADDED ON -88 3/8 X .035 WAS 1/2 X .028		R.M.
G	-89 & -90 ADDED	8-3-49	R.M.
F	-77 TO -88 INC. ADDED	7-6-49	R.R.
E	-71, -72, -73, -74, -75, -76 ADDED	1-14-49	R.M.
D	ON -69 #4130 SST WAS #1025 STL	12-9-48	J.C.B.
C	-67, -68, -69, -70 ADDED	11-9-48	J.C.B.
B	-63, -64, -65 & -66 ADDED	10-7-48	H.R.K.
A	-62 ADDED	8-9-48	H.R.K.

THIS DRAWING IS THE PROPERTY OF THE PIPER AIRCRAFT CORP. AND ITS POSSESSION BY UNAUTHORIZED PERSONS SHALL NOT BE CONSTRUED AS PERMISSION TO REPRODUCE FOR SALE, IN WHOLE OR IN PART. ANY DEVICES SHOWN THEREON

MODEL	PER PLANE	NEXT ASSEMBLY	SUPERSEDES	SUP. BY

PIPER AIRCRAFT CORP.
LOCK HAVEN, PENNA.

NOTED

PART NO. | NO. REQ. | MATERIAL

SCALE | TOTAL WT.—LBS.

FINISH—PIPER SPECIFICATION #10

MANUFACTURING PRACTICES—PIPER SPECIFICATION #9

TUBES

J.C.B.	H.R.K.		
5-28-48	6-16-48		
DRAFTSMAN	CHECKER	STANDARDS	11857

A722

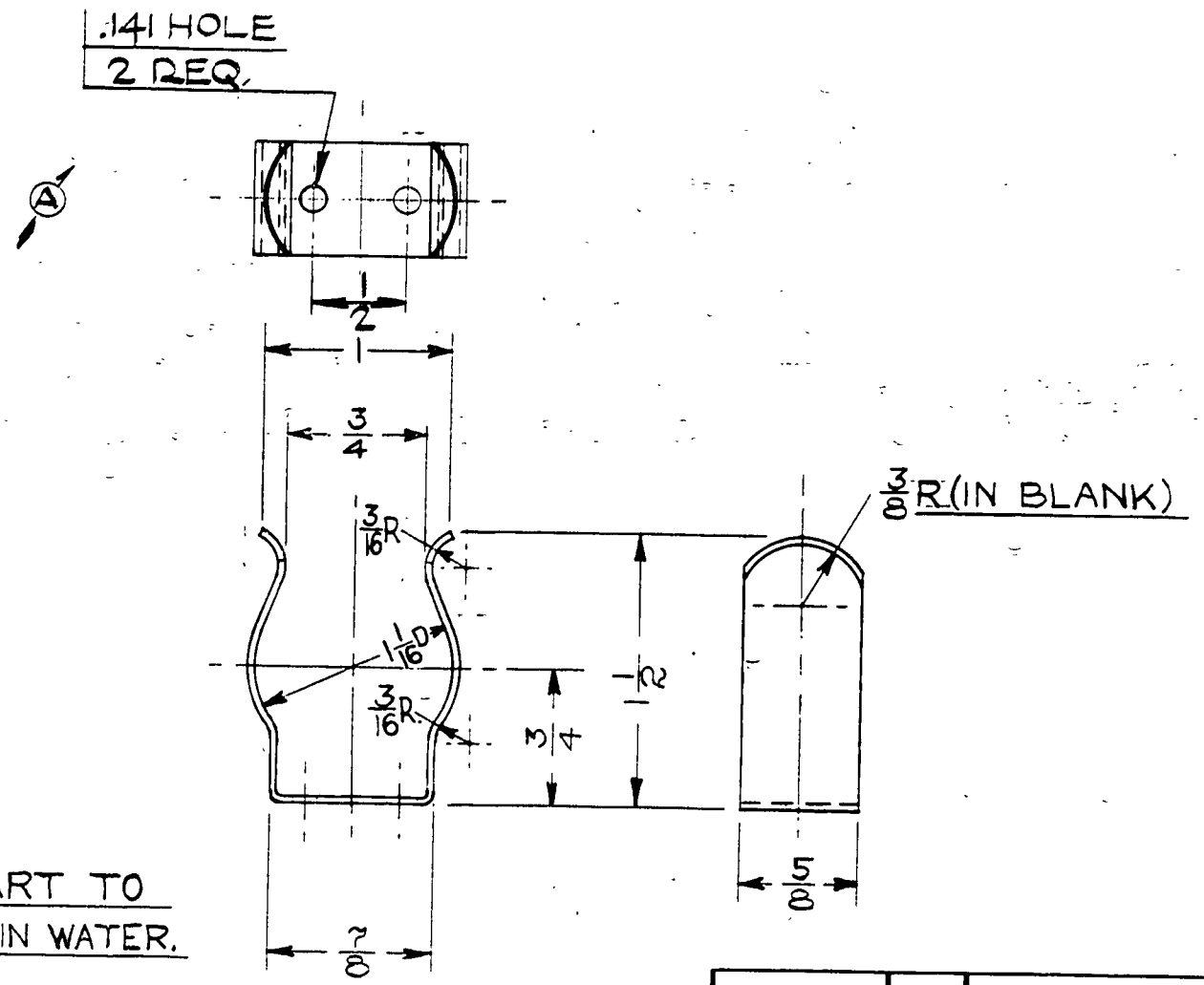

NOTE:

HEAT FINISHED PART TO
1375° F. & QUENCH IN WATER.

LET.	REVISION	DATE	BY
A	SECOND .141 HOLE ADDED	4-7-49	RC

MODEL	PER PLANE	NEXT ASSEMBLY	SUPERSEDES	SUP. BY

THIS DRAWING IS THE PROPERTY OF THE PIPER AIRCRAFT CORP. AND ITS POSSESSION BY UNAUTHORIZED PERSONS SHALL NOT BE CONSTRUED AS PERMISSION TO REPRODUCE FOR SALE, IN WHOLE OR IN PART. ANY DEVICES SHOWN THEREON.

PIPER AIRCRAFT CORP.
LOCK HAVEN, PENNA.

PART No.	No. REQ.	MATERIAL	
		.032 x 5/8 x 4 1/8	*1025 STEEL
		SIZE	DESCRIPTION

SCALE FULL SIZE — TOTAL WT.—LBS.

FINISH—PIPER SPECIFICATION #10

MANUFACTURING PRACTICES—PIPER SPECIFICATION #9

HOLDER — CONTROL STICK

DRAFTSMAN	CHECKER	STANDARDS
H.R.K. 6-4-48	J.C.B. 6-11-48	

11882

89

A89

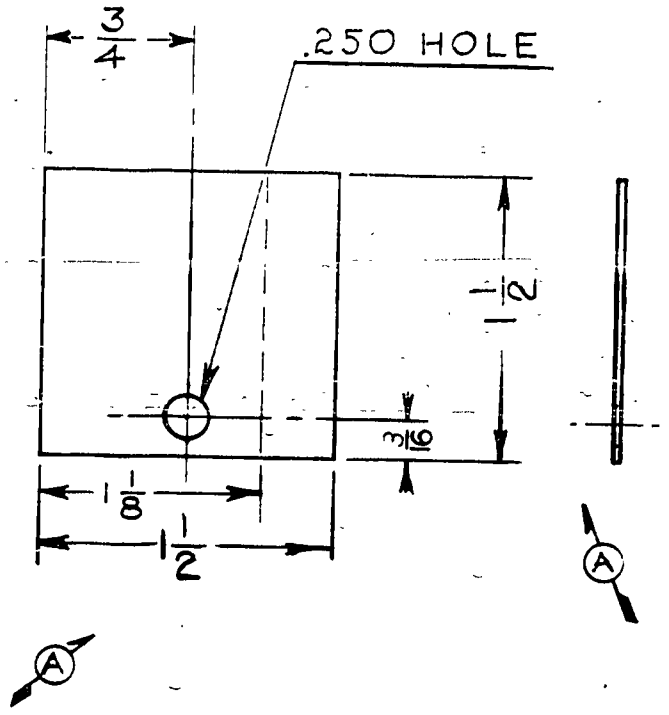

11943 SHOWN

11943-2 AS SHOWN DOTTED

B

PART No.	No. REQ.	SIZE	DESCRIPTION
		.032 × 1½ × NOTED	3S-½H. ALUM.

MATERIAL

SCALE FULL SIZE — TOTAL WT.—LBS.

FINISH—PIPER SPECIFICATION #10

MANUFACTURING PRACTICES—PIPER SPECIFICATION #9

REINFORCEMENT-BAFFLE

MODEL	PER PLANE	NEXT ASSEMBLY	SUPERSEDES	SUP. BY

THIS DRAWING IS THE PROPERTY OF THE PIPER AIRCRAFT CORP. AND ITS POSSESSION BY UNAUTHORIZED PERSONS SHALL NOT BE CONSTRUED AS PERMISSION TO REPRODUCE FOR SALE, IN WHOLE OR IN PART. ANY DEVICES SHOWN THEREON.

LET.	REVISION	DATE	BY
B	-2 ADDED	4-11-49	R.M.
A	1½ WAS 1	9-3-48	JCB

PIPER AIRCRAFT CORP.
LOCK HAVEN, PENNA.

DRAFTSMAN	CHECKER	STANDARDS
R.T.M. 7-9-48	H.R.K. 7-13-48	

11943

90

A 90

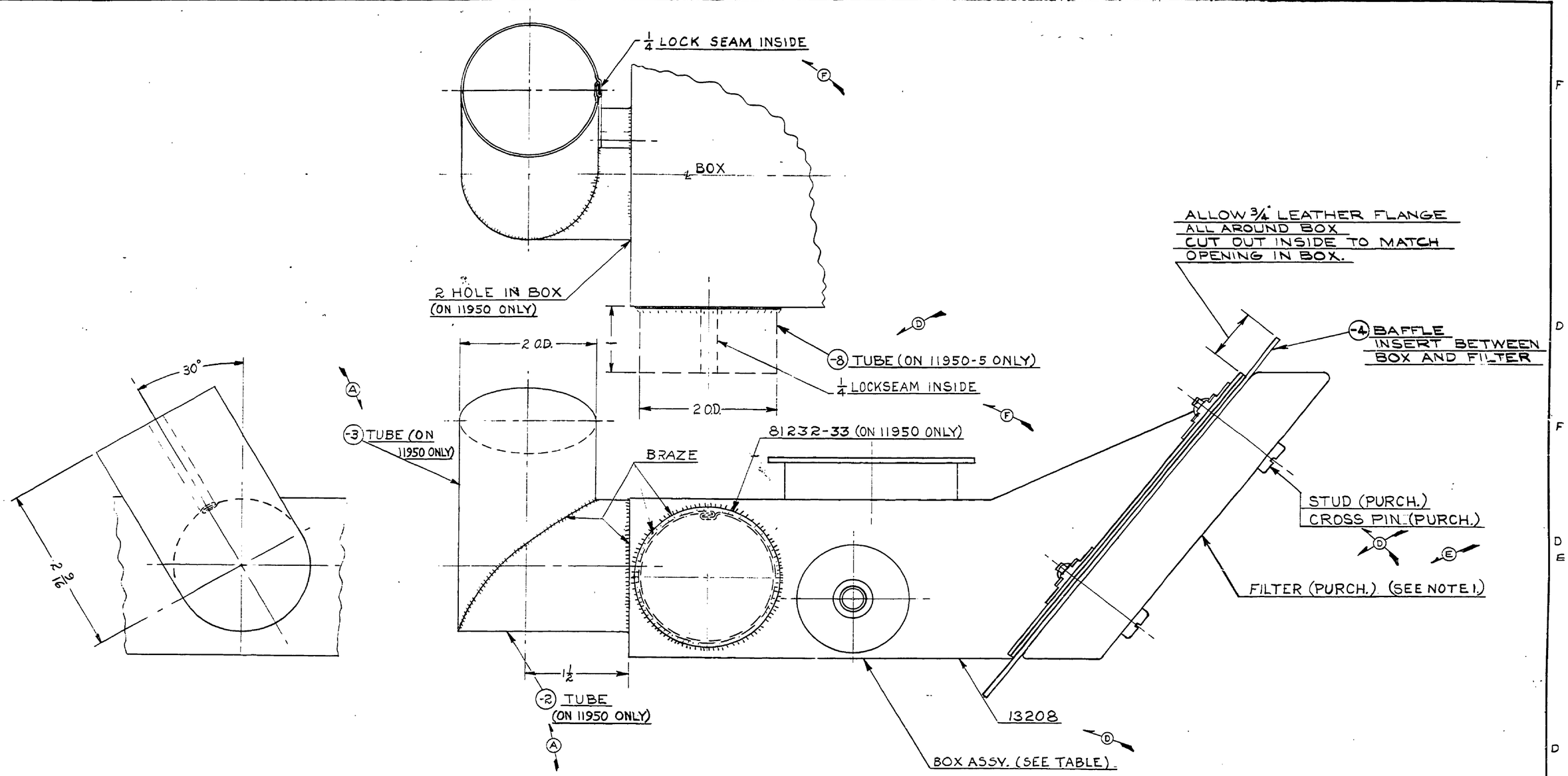

BOX ASS'Y.	BOX ASSY. (LESS FILTER)	REMARKS
11950	11950-6	SHOWN
11950-5	11950-7	WITH 2 IN. HOLE, -2 TUBE, -3 TUBE & 81232-33 OMITTED; -8 TUBE ADDED

NOTE:
1. FILTER #13203 5 1/2 x 5 x 1 TYPE P-1S PANELS WITH FLANGE AT 52°.

	4	STUD #98293-8-1.00	PURCH. UNITED-CARR
		CROSS PIN #99785-2	FASTENER CORP.
13208	1	AIR BOX ASSY.	
-8	1	.020 x 1 x 7	H.R. STEEL (ON 11950-5 ONLY)
-7	1	ASSY. CONSISTS OF 13208 & -8	SEE
-6	1	ASSY. CONSISTS OF 13208, -2, -3 & 81232-33	TABLE
-4	1	.062 x 6 1/2 x 7	GENUINE LEATHER #MB
	1	FILTER #13203 PURCH. AIR MAZE CORP. CLEVELAND OHIO (SEE NOTE 1)	
81232-33	1	DISC (ON 11950 ONLY)	
-3	1	.020 x 3 3/16 x 7	H.R. STEEL ON 11950
-2	1	.020 x 2 7/8 x 7	H.R. STEEL ONLY
PART NO.	NO. REQ.	SIZE	DESCRIPTION
		MATERIAL	

SCALE FULL SIZE | TOTAL WT.—LBS.
FINISH—PIPER SPECIFICATION #10
MANUFACTURING PRACTICES—PIPER SPECIFICATION #9

LET.	REVISION	DATE	BY
F	LOCKSEAM LOCATION "INSIDE" ADDED	4-13-51	H.R.K.
E	AIR MAZE FILTER #13203 WAS CONT. FILTER #40599, NOTE 1 ADDED	2-22-51	H.R.K.
D	13208 WAS AIR INTAKE ASSY. #A40522 (PURCH); -8 & FILTER ADD	1-31-51	H.R.K.
C	-6, -7 & TABLE ADDED	10-20-50	K.D.
B	-5 ADDED	9-24-50	C.K.
A	-2 & -3 REVISED	4-11-49	C.K.

MODEL | PER PLANE | NEXT ASSEMBLY | SUPERSEDES | SUP. BY

THIS DRAWING IS THE PROPERTY OF THE PIPER AIRCRAFT CORP. AND ITS POSSESSION BY UNAUTHORIZED PERSONS SHALL NOT BE CONSTRUED AS PERMISSION TO REPRODUCE FOR SALE, IN WHOLE OR IN PART, ANY DEVICES SHOWN THEREON

PIPER AIRCRAFT CORP.
LOCK HAVEN, PENNA.

BOX ASSEMBLY—CARBURETOR AIR

H.R.K.	J.C.B.		
7-15-48	8-19-48		11950
DRAFTSMAN	CHECKER	STANDARDS	

723

A723

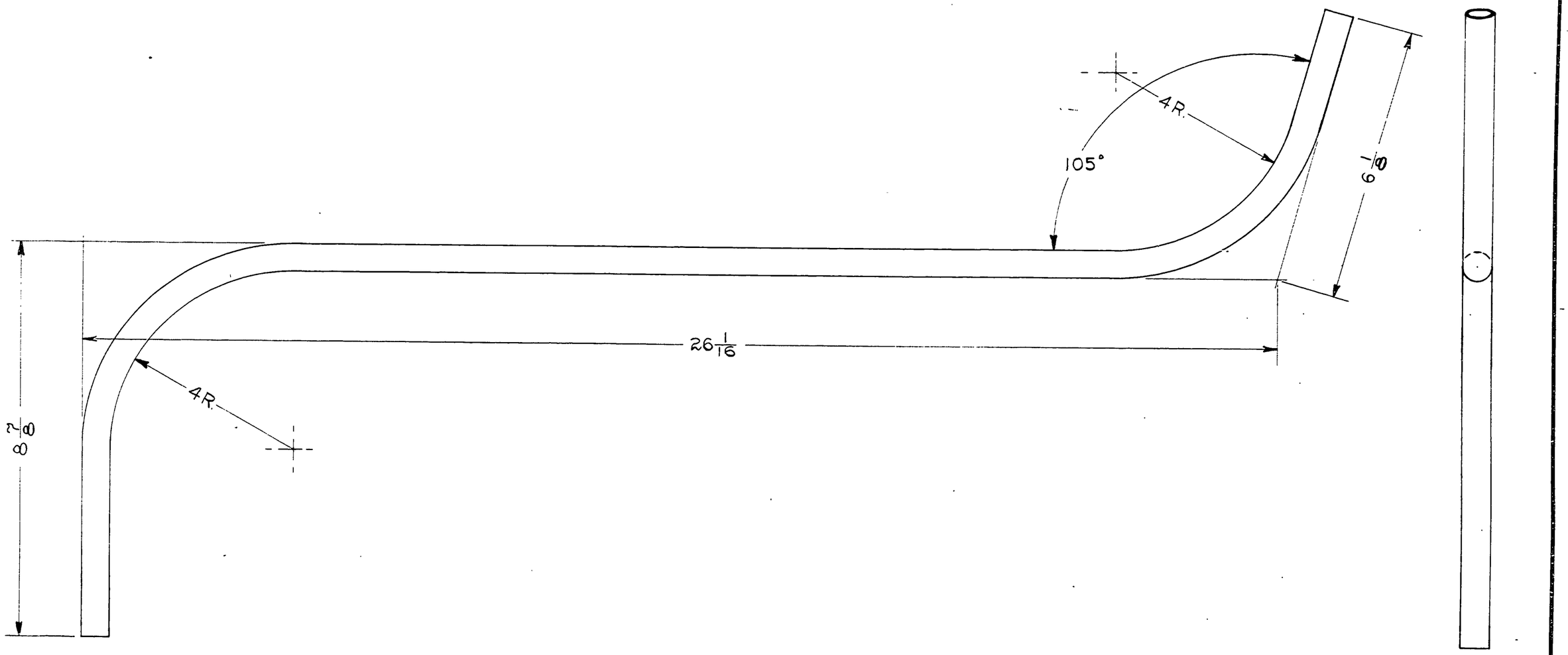
4R.
105°
6 1/8
26 1/16
4R.
8 7/8

ASS'Y. NO.	TUBE NO.	A	B	R	FITTING	REMARKS
11973	11973-2	16 1/4	16 3/4	2 1/16	W/H #41×6	
11973-3	11973-4	20 3/4	10 1/8	15/16	W/H #105×6	
11973-5	11973-6	74 15/16	4 7/16	15/16	W/H #105×6	SEE FIG. 1
11973-7	11973-8	81 1/16	4 7/16	15/16	W/H #105×6	SEE FIG. 1

(B) (C) (E)

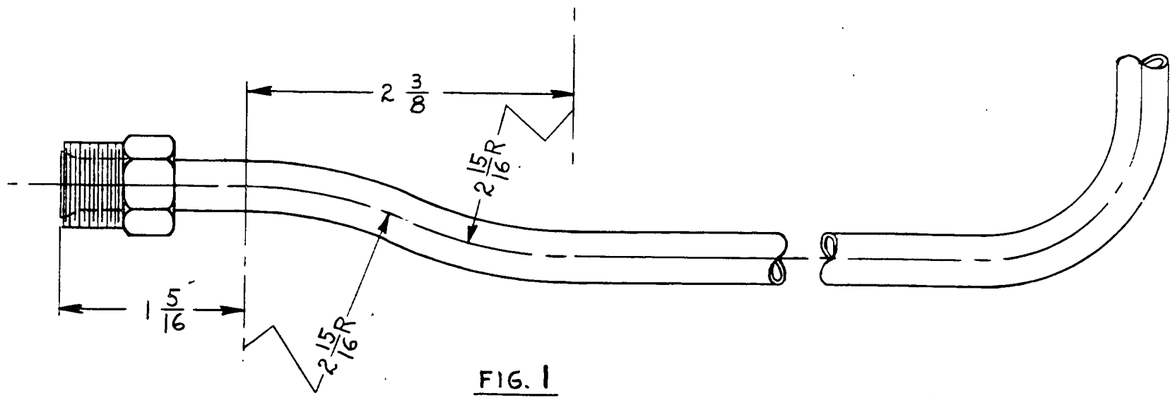

FIG. 1
END DETAIL (ON 11973-5 & 11973-7 ONLY)

FOR TUBE END FLARES
SEE DRAWING 82551

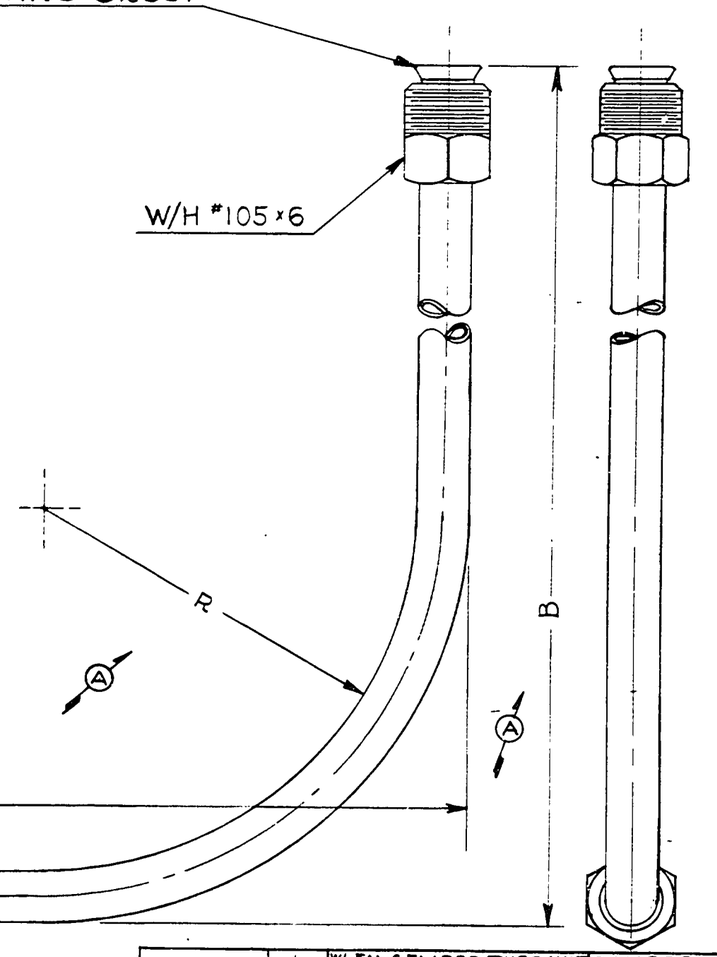

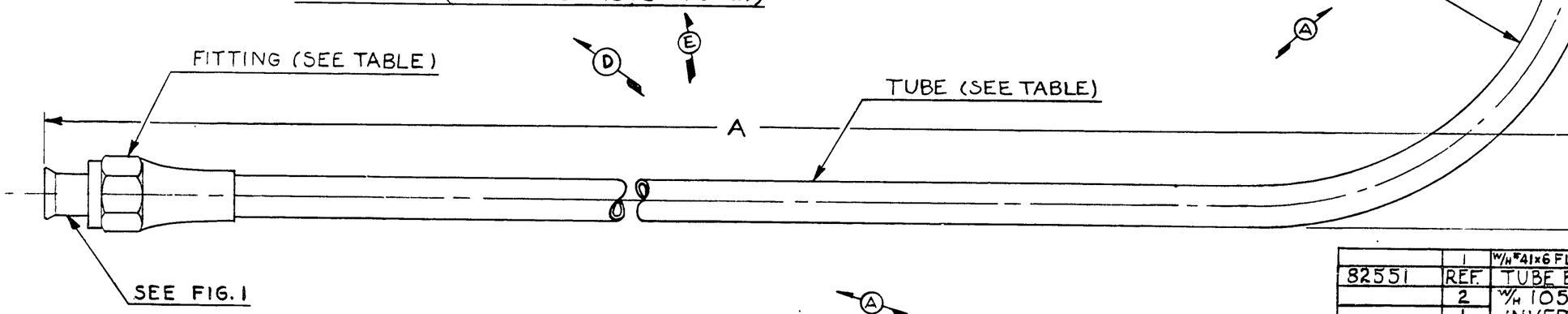

	1	W/H #41×6 FLARED TUBE NUT	ON 11973 ONLY
82551	REF.	TUBE END FLARES	
	2	W/H 105×6	ON 11973-3, -5 & -7 ONLY
	1	INVERTED NUT	ON 11973 ONLY
-8	1	3/8 × .032 × 85 1/2	ON 11973-7 ONLY
-6		3/8 × .032 × 77 7/8	ON 11973-5 ONLY
-4		3/8 × .032 × 29 3/8	ON 11973-3 ONLY
-2		3/8 × .032 × 31 1/2	ON 11973 ONLY
PART NO.	NO. REQ.	SIZE — MATERIAL	DESCRIPTION

3S-0 ALUM. TUBE

SCALE FULL SIZE — TOTAL WT.—LBS.

FINISH—PIPER SPECIFICATION #10

MANUFACTURING PRACTICES—PIPER SPECIFICATION #9

LET.	REVISION	DATE	BY
E	-7 & -8 ADDED	3-5-51	I.M.M.
D	END DETAIL ADDED FOR -5	5-2-50	C.K.
C	-5 & -6 ADDED	2-17-50	HRK
B	-3, -4 & TABLE ADDED	10-31-49	K.D.
A	16 1/4 WAS 18; 16 3/4 WAS 16 1/4; 2 1/16 R WAS 3 3/4 R	8-23-49	C.K.

MODEL | PER PLANE | NEXT ASSEMBLY | SUPERSEDES | SUP. BY

THIS DRAWING IS THE PROPERTY OF THE PIPER AIRCRAFT CORP. AND ITS POSSESSION BY UNAUTHORIZED PERSONS SHALL NOT BE CONSTRUED AS PERMISSION TO REPRODUCE FOR SALE, IN WHOLE OR IN PART. ANY DEVICES SHOWN THEREON.

PIPER AIRCRAFT CORP.
LOCK HAVEN, PENNA.

LINE ASSEMBLY — FUEL

DRAFTSMAN	CHECKER	STANDARDS
H.R.K. 8-9-48	J.C.B. 8-23-48	

11973

478

A478

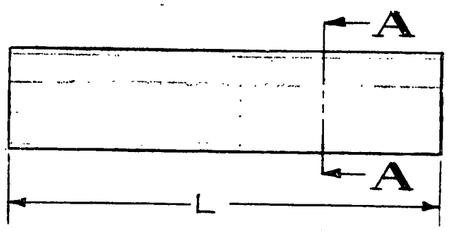



NOTE:
BLANK LENGTH GIVEN
ENDS TO BE CUT AS SHOWN
ON RIB ASSEMBLY DRAWING

SECTION A-A
TWICE SIZE

PART NO.	L	SECTION NO.	MODEL	PER PLANE	NEXT ASSEMBLY
11982-2	9 3/4	84761			
11982-3	7 5/16	84761-2	J3, L-4A	44	13022,13042,13052,12902
			J5C	WOOD SPAR WING 54: 13452,10718,10692,10722,10642,10088,10109 / METAL SPAR WING 54: 10227,10702,10732	
			L-14	52	90450,90451,90453,90452,90462,90463,90466,90468,90465,90478,90529,90519,90467,90522,90521,90524,90523
11982-4	10 1/4	84761			
11982-5	6 1/2	84761-2	J3	2	15712
11982-6	10 3/4	84761			
11982-7	8 1/4	84761-2			
11982-8	4	84761-2			
11982-9	2	84761-2			
11982-10	9 1/4	84761			
11982-11	3	84761-2			
11982-12					
11982-13	6 3/4	84761-2			
11982-14	4 1/2	84761			
11982-15	8 1/4	84761			
11982-16	5 3/8	84761	J5C		
11982-17	9 1/4	84761-2			
11982-18	5 1/4	84761	J5C, J3, L-14	2	10742
11982-19	9 3/4	84761-2			
11982-20	4 3/8	84761			
11982-21	9	84761			
11982-22	6 5/8	84761-2			
11982-23	2 1/4	84761-2			
11982-24	11	84761			
11982-25	7 7/8	84761-2			
11982-26	4 7/16	84761-2			
11982-27	5 7/16	84761-2			
11982-28	5 1/4	84761-2	J3, L-4A	2	12912
11982-29	14 1/2	84761-2			
11982-30	5 1/16	84761-2	J3, L-4A	4	12912
11982-31	9 5/8	84761			
11982-32	17	84761			
11982-33	7	84761-2			
11982-34	7 3/4	84761			
11982-35	7 3/16	84761-2	J3, L-4A	44	13022,13042,13052,12902
			J5C	WOOD SPAR WING 54: 13452,10718,10692,10722,10642,10088,10109 / METAL SPAR WING 54: 10227,10702,10732	
			L-14	52	90450,90451,90453,90452,90462,90463,90466,90468,90465,90478,90529,90519,90467,90522,90521,90524,90523
11982-36	8	84761			
11982-37	2 3/8	84761-2			
11982-38	17 7/8	84761			
11982-39	15 3/8	84761			
11982-40	4 31/32	84761	J5C, J3, L-14	2	10742

LET.	REVISION	DATE	BY
AF	J3 MODEL REF. ADDED FOR -5	8-29-46	C.E.K.
AE	L DIM. 7 5/16 FOR -3 WAS 7 1/4	5-22-46	C.E.Y.
AD	J5C N.A. 10108 WAS 10652 FOR -3E-35	12-4-45	L.E.K.
AC	J5C N.A. 10227 WAS 10672 FOR -3E-35	12-4-45	L.E.K.
AB	J5C WOOD SPAR REF. CANC. FOR -3-35	11-29-45	I.D.B.
AA	FOR J5C, N.A. 10672 WAS 10227, N.A. 10652 WAS 10108 & N.A. 10109 REM., FOR -3E-35	10-31-45	L.E.K.
Z	J5C N.A. 10227 WAS 10672 FOR -3E-35	10-19-45	R.E.S.
Y	J5C N.A. 10108 WAS 10652 FOR -3E-35	10-5-45	H.R.K.
X	L-14 MODEL REF. ADDED FOR -18E-40	7-3-45	I.B.B.
W	L-14 PER PLANE 52 WAS 54 FOR -3E-35	7-3-45	I.D.B.
V	L-14 P.N. 90464 REMOVED FOR -3E-35	7-3-45	I.D.B.
U	REDRAWN & REVISED	4-17-45	I.M.M.

SEE "PIPER SECTION NO. IN TABLE"

PART NO. | NO. REQ. | MATERIAL

SCALE | TOTAL WT.—LBS.

FINISH—PIPER SPECIFICATION #10

MANUFACTURING PRACTICES—PIPER SPECIFICATION #9

BRACE—RIB

MODEL	PER PLANE	NEXT ASSEMBLY	SUPERSEDES	SUP. BY

PIPER AIRCRAFT CORP.
LOCK HAVEN, PENNA.

DRAFTSMAN	CHECKER	STANDARDS
I. McNERNEY 3-17-45	R.E. TITUS 3-19-45	

11982

4-79

A479

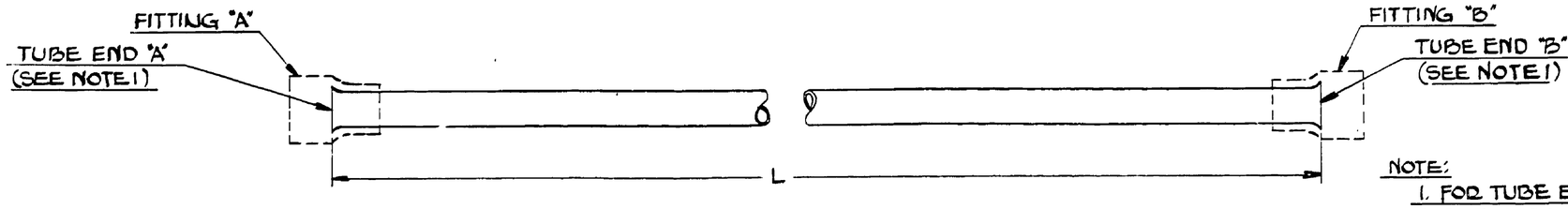

NOTE:
1. FOR TUBE END FLARES SEE DWG. 82551.
2. SEE ALSO DWG. 10143.

ASSY. NO.	TUBE NO.	L	O.D.	WALL THICK.	MAT'L.	END FITTINGS A	END FITTINGS B	TUBE END A	TUBE END B
	11987-2	1¾	3/8	.032	COPPER	NONE	NONE	FLARED	PLAIN
11987-3	11987-4	15¾	1/4	.032	3S-0 ALUM.	W/H #105×4	W/H #105×4	FLARED	FLARED
11987-5	11987-6	45	1/4	.032	3S-0 ALUM.	W/H #105×4	NONE	FLARED	PLAIN
11987-7	11987-8	13	1/4	.032	3S-0 ALUM.	AN818-4D & AN819-4D	AN818-4D & AN819-4D	FLARED	FLARED
11987-9	11987-10	20	1/8	.032	COPPER	W/H #105×2	W/H #105×2	FLARED	FLARED
11987-11	11987-12	20	1/4	.032	3S-0 ALUM.	W/H #41×4	W/H #41×4	FLARED	FLARED
11987-13	11987-14	42	3/8	.032	3S-0 ALUM.	W/H #105×6	NONE	FLARED	PLAIN
11987-15	11987-16	15¼	3/8	.032	3S-0 ALUM.	W/H #105×6	NONE	FLARED	PLAIN
11987-17	11987-18	53	1/4	.032	3S-0 ALUM.	W/H #105×4	NONE	FLARED	PLAIN
11987-19	11987-20	30	1/8	.032	COPPER	W/H #105×2	NONE	FLARED	PLAIN
11987-21	11987-22	28	1/4	.032	3S-0 ALUM.	W/H #105×4	NONE	FLARED	PLAIN
11987-23	11987-24	43	1/4	.032	3S-0 ALUM.	W/H #105×4	NONE	FLARED	PLAIN
11987-25	11987-26	1¾	1/4	.032	3S-0 ALUM.	W/H #105×4	NONE	FLARED	PLAIN
1198-27	11987-28	38	1/8	.032	COPPER	AN818-2D & AN819-2	AN818-2D & AN819-2	FLARED	FLARED
11987-29	11987-30	58	1/4	.032	3S-0 ALUM.	W/H #41×4	W/H #41×4	FLARED	FLARED
11987-31	11987-32	17	1/4	.032	3S-0 ALUM.	W/H #41×4	W/H #41×4	FLARED	FLARED
11987-33	11987-34	20	3/8	.032	3S-0 ALUM.	W/H #105×6	W/H #105×6	FLARED	FLARED
11987-35	11987-36	16	1/4	.032	COPPER	W/H #105×4	W/H #105×4	FLARED	FLARED
11987-37	11987-38	50¾	3/8	.032	3S-0 ALUM.	W/H #105×6	NONE	FLARED	PLAIN
11987-39	11987-40	59¾	1/4	.032	3S-0 ALUM.	W/H #105×4	NONE	FLARED	PLAIN
11987-41	11987-42	18½	1/4	.032	3S-0 ALUM.	W/H #41×4	W/H #41×4	FLARED	FLARED
11987-43	11987-44	14	1/4	.032	3S-0 ALUM.	W/H #105×4	NONE	FLARED	PLAIN

ASSY. NO.	TUBE NO.	L	O.D.	WALL THICK.	MAT'L.	END FITTINGS A	END FITTINGS B	TUBE END A	TUBE END B

LET.	REVISION	DATE	BY
R	-41,-42,-43 & -44 ADDED	7-23-51	I.E.M.
Q	W/H #105×2 WAS 843-2 ON-9	6-18-51	H.R.K.
P	REDRAWN WITHOUT CHANGE	6-11-51	M.G.
O	-37-38,-39 & -40 ADDED	5-5-51	L.M.M.
N	58 WAS 54 ON-29	1-15-51	F.C.S.
M	-33-34,-35 & -36 ADDED	12-13-50	M.G.
L	-29 & -31 ADDED	11-3-50	H.R.K.
K	-27 ADDED	9-25-50	C.K.
J	-23 & -25 ADDED	9-8-50	L.D.
H	20 WAS 17½ ON-11	4-10-50	C.K.
G	-21 ADDED	4-4-50	C.K.
F	-19 ADDED; 20 WAS 19 FOR-9	3-30-50	H.R.K.
E	-13,-15,-17 ADDED	2-17-50	H.R.K.
D	-11 ADDED	9-20-49	H.R.K.
C	-9 ADDED	8-15-49	H.R.K.
B	-7 ADDED	6-30-48	R.C.
A	-3 & -5 ADDED	3-4-49	H.R.K.

THIS DRAWING IS THE PROPERTY OF THE PIPER AIRCRAFT CORP. AND ITS POSSESSION BY UNAUTHORIZED PERSONS SHALL NOT BE CONSTRUED AS PERMISSION TO REPRODUCE FOR SALE, IN WHOLE OR IN PART. ANY DEVICES SHOWN THEREON

MODEL	PER PLANE	NEXT ASSEMBLY	SUPERSEDES	SUP. BY

PIPER AIRCRAFT CORP.
LOCK HAVEN, PENNA.

82551	REF.	TUBE END FLARES
PART NO.	NO. REQ.	NAME / MATERIAL
SCALE		TOTAL WT.—LBS.

FINISH—PIPER SPECIFICATION #10
MANUFACTURING PRACTICES—PIPER SPECIFICATION #9

TUBE ASSEMBLIES

DRAFTSMAN	CHECKER	STANDARDS	
H.D.K. 7-29-48	J.C.B. 9-3-48		11987

7.24

A724

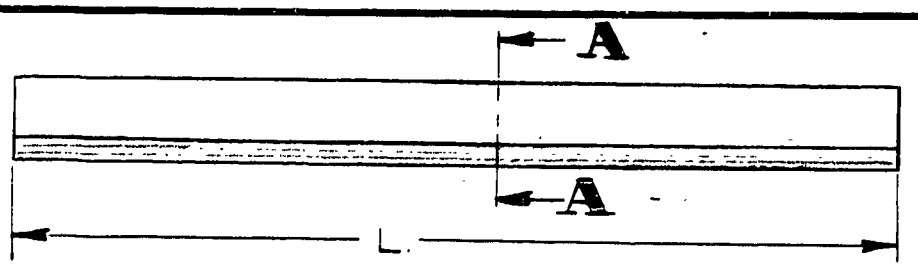

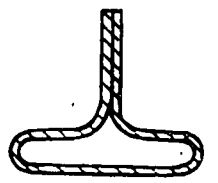

SECTION A-A
TWICE SIZE

PART NO.	L	PER SHIP	MODEL	NEXT ASSEMBLY
11991-2	132	10	~~J3~~, ~~L-4A~~, L-4B, TG-8	13052, 13042
		16	J5	12002, 10692, 10682, 10672, 10642, 10702
		16	J4	10692, 10682, 10672, 10652, 10642, 10702
		16	~~J5C~~, J5D	13452, 10692, 10682, 10672, 10652, 10642, 10702
		16	HE-1	13452, 10692, 10682, 10672, 10642, 10702
11991-3	106	14	J4, J5, ~~J5C~~, J5D, HE-1	10732, 10722, 10712
		10	~~J3~~, ~~L-4A~~, L-4B, TG-8	13022
11991-4	53	4	~~J3~~, ~~L-4A~~, L-4B, TG-8	12912
		4	J4, J5, ~~J5C~~, J5D, HE-1	10742
11991-5	11 3/4	2	~~J3~~, ~~L-4A~~, L-4B, TG-8	12652
11991-6	11	2	~~J3~~, ~~L-4A~~, L-4B, TG-8	12652
11991-7	25 3/4	20	~~J3~~, ~~L-4A~~, L-4B, TG-8	12662
11991-8	8 7/8	~~X2~~	~~J3~~, ~~L-4A~~, ~~L-4B~~, ~~TG-8~~,	~~X313X~~
11991-9	127	2	~~J3~~, ~~L-4A~~, L-4B, TG-8	12902
11991-10	9 3/8	~~X2~~	~~J3~~, ~~L-4A~~, ~~L-4B~~, ~~TG-8~~	~~145XX~~
11991-11	6 1/16			
11991-12	7			

LET	REVISION	DATE	BY
M	REDRAWN WITHOUT CHANGE	6-13-51	I.M.M.
L	-11 & -12 ADDED	9-17-48	H.R.K.
K	J5C MODEL REF. CAN. FOR -2	6-19-44	V.P.
J	J5C MODEL REF. CANCELLED FOR -3 & -4	11-26-43	R.E.T.
H	J3 REF. CANCELED.	8-24-43	I.D.B.
G	REFERENCES OF -10 CANCELED	7-20-43	C.K.
F	REFERENCES OF -8 CANCELED	5-31-43	R.R.F.
E	DIM. REMOVED FROM SECT. A-A	5-13-43	I.D.B.
D	SPEC. REVISED TO INCLUDE 84771	5-13-43	I.D.B.
C	L-4A REF. CANCELLED FOR -2, -3, -4, -5, -6, -7, -9	5-6-43	C.K.
B	REDRAWN & REVISED	3-4-43	C.K.

NOTED MODEL	NOTED PER PLANE	NOTED NEXT ASSEMBLY	11241 SUPERSEDES	SUP. BY

THIS DRAWING IS THE PROPERTY OF THE PIPER AIRCRAFT CORP. AND ITS POSSESSION BY UNAUTHORIZED PERSONS SHALL NOT BE CONSTRUED AS PERMISSION TO REPRODUCE FOR SALE IN WHOLE OR IN PART ANY DEVICES SHOWN THEREON.

PIPER AIRCRAFT CORP.
LOCK HAVEN, PENNA.

84771 | DWG. REF. ONLY | RIB CAPSTRIP SECTION

NOTED | PIPER SECTION 84771

PART NO. | NO. REQ. | SIZE | DESCRIPTION | MATERIAL

SCALE FULL SIZE & NOTED | TOTAL WT.—LBS.

FINISH—PIPER SPECIFICATION # 10

MANUFACTURING PRACTICES—PIPER SPECIFICATION # 9

CAPSTRIP — RIB

DRAFTSMAN	CHECKER	STANDARDS
C.K. 3-4-43	L.E.K. 3-19-43	

11991

91

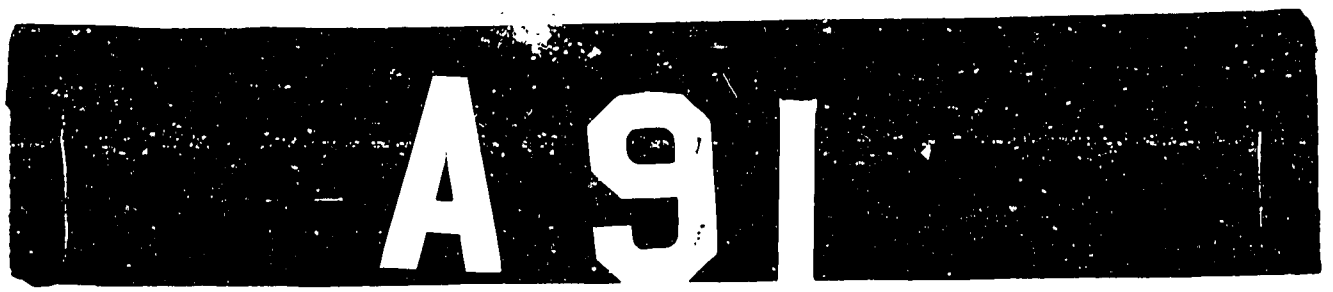

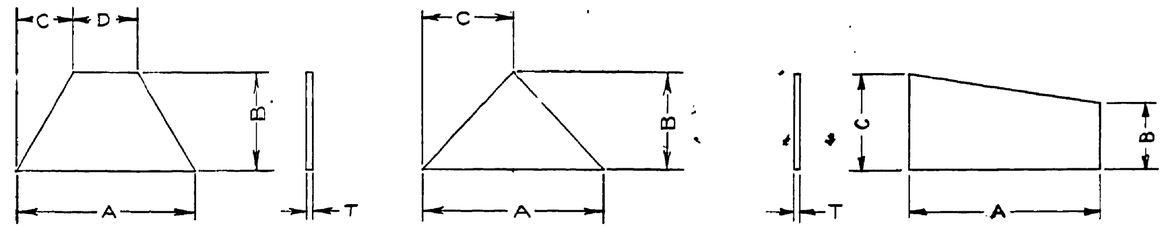

TYPE 1 TYPE 2 TYPE 3

PART NO	TYPE	A	B	C	D	T	MAT'L.
11994-2	1	1 1/2	4 1/4	1	1/2	.032	#1025 STL.
11994-3	1	3 5/8	5/8	5/16	3	.045	#1025 STL.
11994-4	1	1 3/4	5/8	1/2	7/16	.062	#1025 STL.
11994-5	1	2 3/4	1	1	3/4	.062	#1025 STL.
11994-6	2	1 3/4	7/8	7/8	—	.062	#1025 STL.
11994-7	2	1 9/16	3/4	9/16	—	.062	#1025 STL.
11994-8	1	5/16	1/2	3/32	1/8	.062	#1025 STL.
11994-9	1	2 13/16	1 5/8	1	13/16	.045	#1025 STL.
11994-10	1	2	6 1/4	1 1/2	1/2	.032	#1025 STL.
11994-11	1	1	7/8	7/16	1/8	.095	#1025 STL.
11994-12	1	1 5/8	5/8	7/16	3/8	.095	#1025 STL.
11994-13	3	2 15/16	1 7/16	1 31/32	—	.062	#1025 STL.
11994-14	1	1 3/8	1	13/32	9/16	.095	#1025 STL.

PART NO	TYPE	A	B	C	D	T	MAT'L.

PART NO	TYPE	A	B	C	D	T	MAT'L.

SEE ALSO DWG. 81272

LET.	REVISION	DATE	BY
J	-14 ADDED	3-21-51	J.M.M.
H	-13 & TYPE 3 ADDED	1-22-51	C.K.
G	-11 & -12 ADDED	9-25-50	C.K.
F	-10 ADDED	8-9-50	J.C.B.
E	-9 ADDED	6-30-50	C.K.
D	-8 ADDED	1-26-50	C.K.
C	-7 ADDED	12-28-49	J.S.A.
B	-5 & -6 ADDED	[illegible]	[illegible]
A	-3, -4 ADDED	12-7-48	J.C.B.

THIS DRAWING IS THE PROPERTY OF THE PIPER AIRCRAFT CORP. AND ITS POSSESSION BY UNAUTHORIZED PERSONS SHALL NOT BE CONSTRUED AS PERMISSION TO REPRODUCE FOR SALE, IN WHOLE OR IN PART, ANY DEVICES SHOWN THEREON

MODEL | PER PLANE | NEXT ASSEMBLY | SUPERSEDES | SUP. BY

PIPER AIRCRAFT CORP.
LOCK HAVEN, PENNA.

PART NO. | NO. REQ. | MATERIAL
SCALE | TOTAL WT.—LBS.
FINISH—PIPER SPECIFICATION #10
MANUFACTURING PRACTICES—PIPER SPECIFICATION #9

GUSSETS

R.T.M. 8-2-48 | H.R.K. 8-27-48
DRAFTSMAN | CHECKER | STANDARDS

11994

A725

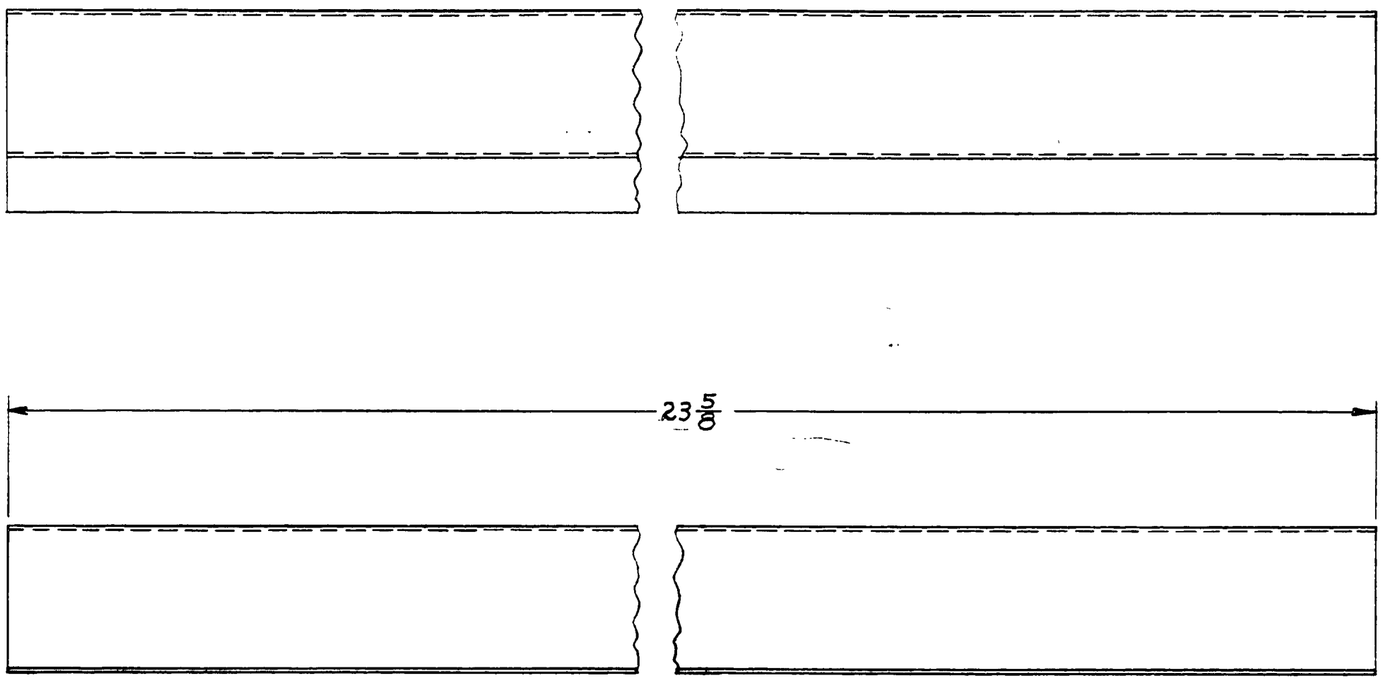
23 5/8

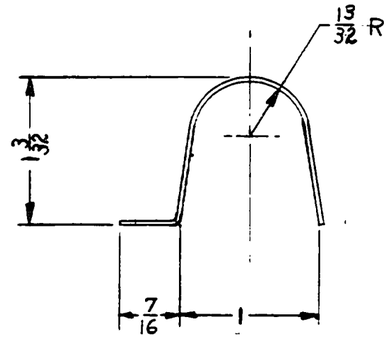
15/32 R
13/32
7/16
1

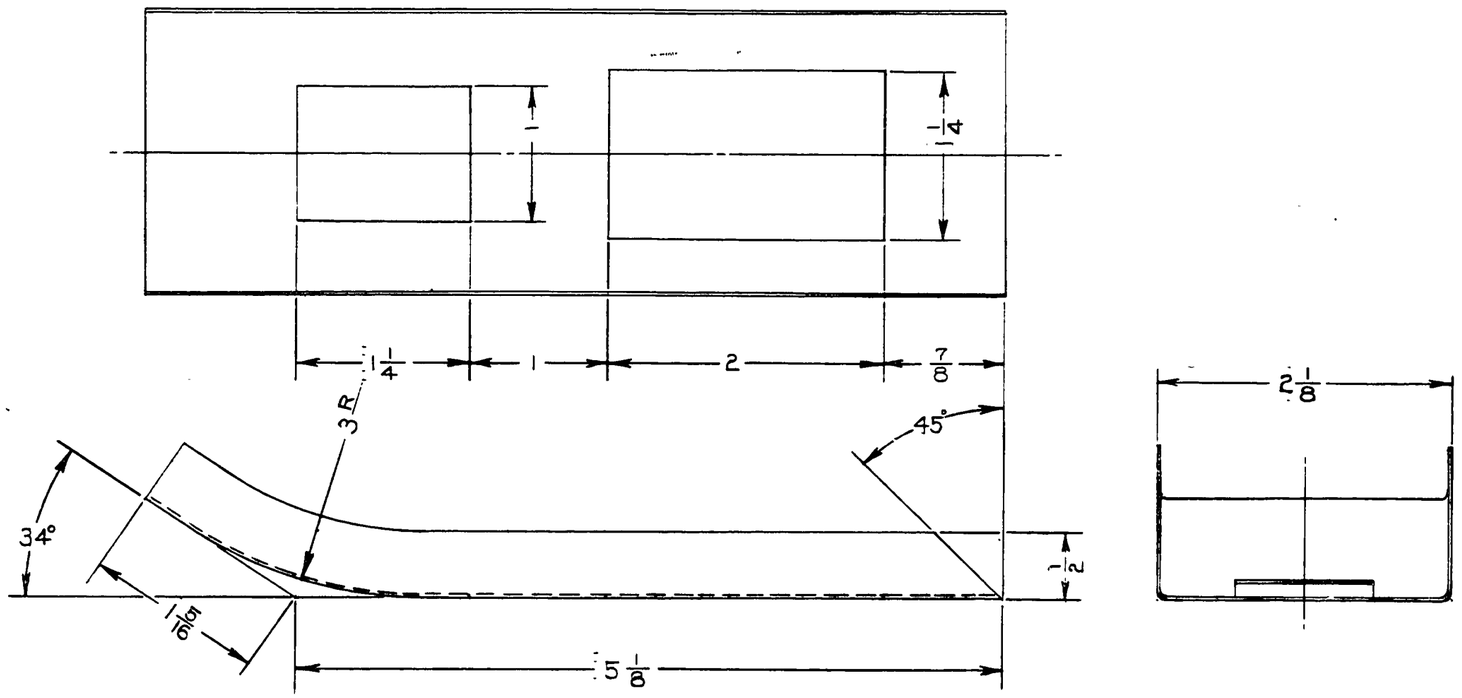
1
1/4
1 1/4
1
2
7/8
3R
45°
34°
1/2
15/16
5 1/8

2 1/8

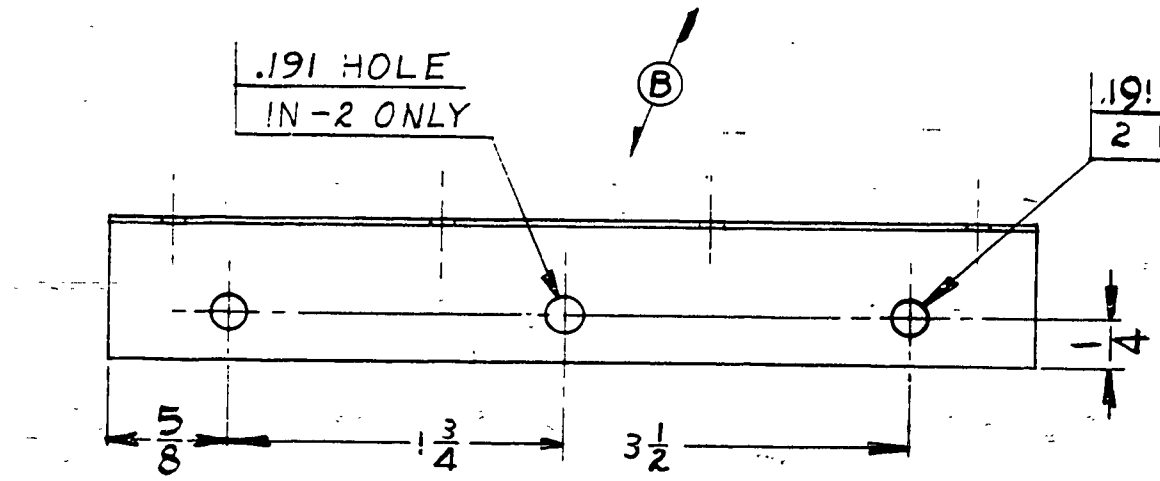

PART NO.	MAT'L
12033	3S- ½ H ALUM.
12033-2	ST. STL. TYPE 347 ANNEALED 2 DRW

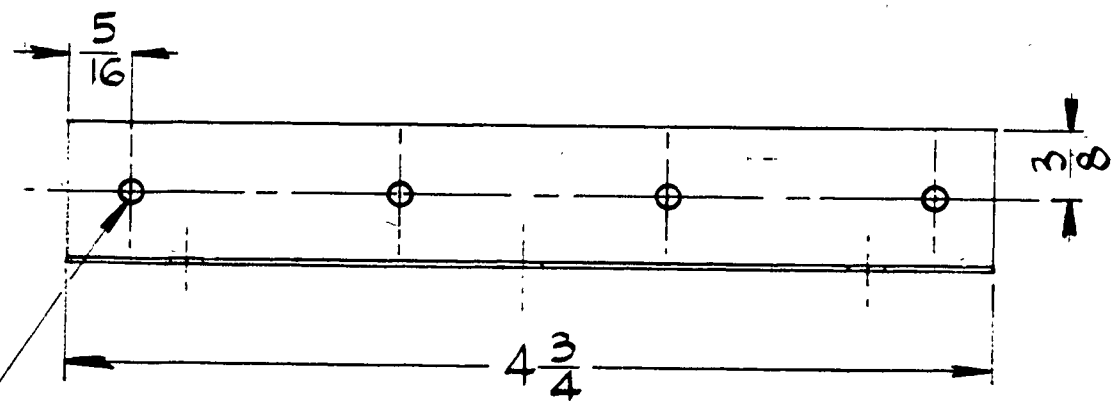

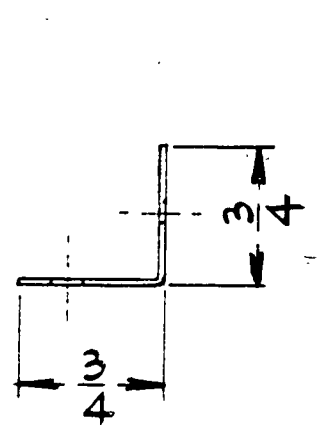

LET.	REVISION	DATE	BY
B	.191 HOLE ADDED	3-2-49	C.E.K.
A	-2 AND TABLE ADDED	9-22-48	JCB

MODEL | PER PLANE | NEXT ASSEMBLY | SUPERSEDES | SUP. BY

THIS DRAWING IS THE PROPERTY OF THE PIPER AIRCRAFT CORP. AND ITS POSSESSION BY UNAUTHORIZED PERSONS SHALL NOT BE CONSTRUED AS PERMISSION TO REPRODUCE FOR SALE, IN WHOLE OR IN PART, ANY DEVICES SHOWN THEREON.

PIPER AIRCRAFT CORP.
LOCK HAVEN, PENNA.

PART No.	No. REQ.	SIZE	MATERIAL
		.032 x 1 1/2 x 4 3/4	SEE TABLE

DESCRIPTION

SCALE FULL SIZE | TOTAL WT.—LBS.

FINISH—PIPER SPECIFICATION #10

MANUFACTURING PRACTICES—PIPER SPECIFICATION #9

ANGLE - BATTERY BOX ATTACHMENT

DRAFTSMAN	CHECKER	STANDARDS
B.C. 8-26-48	H.R.K. 8-26-48	

12033

92

A92

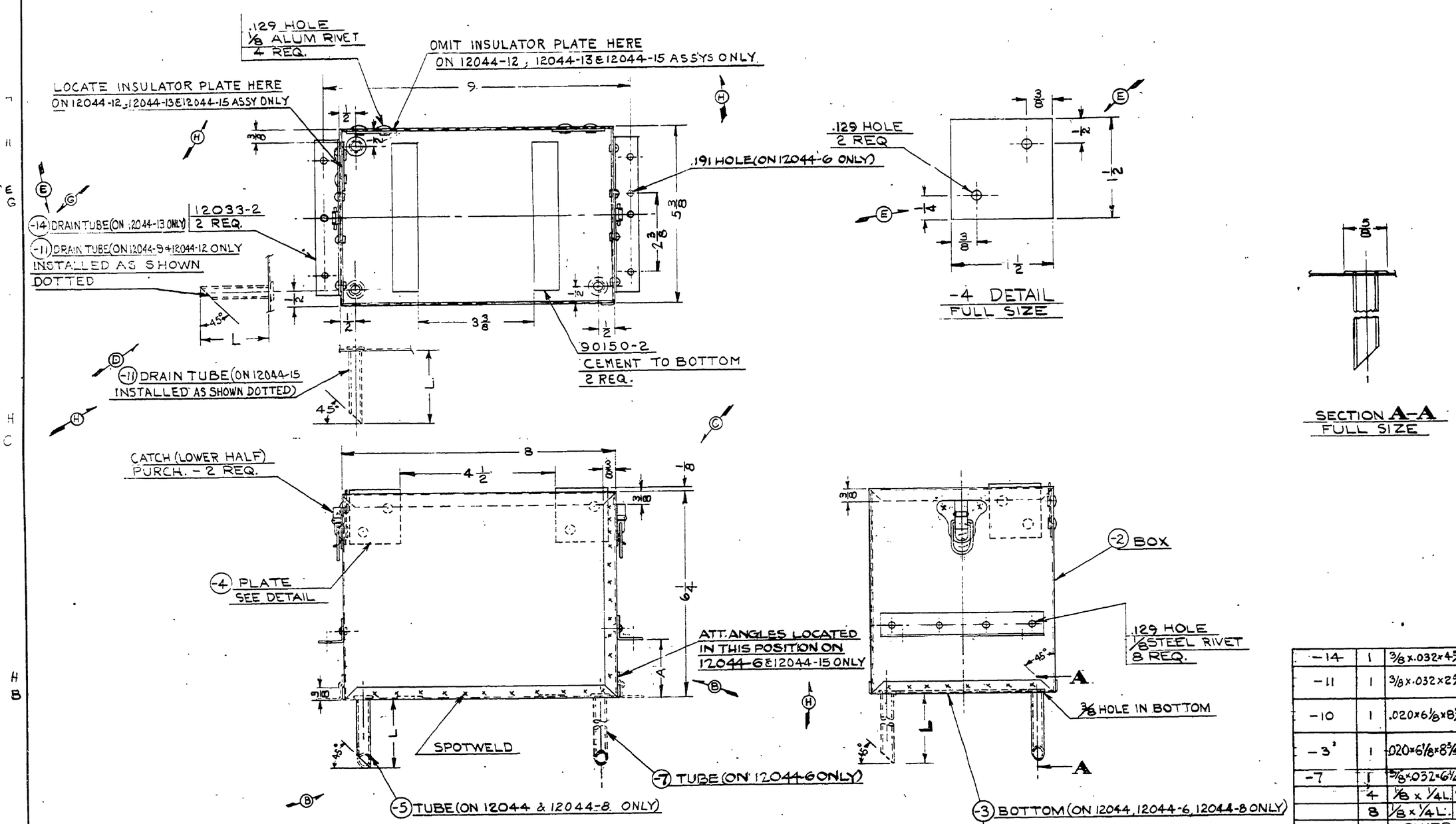

NOTES:
1. INSIDE OF BOX TO BE PAINTED WITH ACID RESISTANT PAINT.
2. SOLDER ALL SEAMS.

ASSY. NO.	L	REMARKS	A
12044	2	SHOWN & NOTED	2 1/8
12044-6	6	SHOWN & NOTED	
12044-8	2	SHOWN & NOTED	3 7/16
12044-9	2 3/8	SHOWN & NOTED	1 3/4
12044-12	2 3/8	SHOWN & NOTED	1 3/4
12044-13	4 3/8	SHOWN & NOTED	1 3/8
12044-15	2 3/8	SHOWN & NOTED	

PART NO.	NO. REQ.	SIZE	DESCRIPTION
-14	1	3/8 x .032 x 4 5/8	COPPER TUBE (ON 12044-13 ONLY)
-11	1	3/8 x .032 x 2 5/8	COPPER TUBE (ON 12044-9, 12044-12 & 12044-15 ONLY)
-10	1	.020 x 6 1/8 x 8 3/4	ST. STL. TYPE 347 ANNEALED 2D FINISH (ON 12044-9, 12044-12, 12044-13 & 12044-15 ONLY)
-3	1	.020 x 6 1/8 x 8 3/4	ST. STL. TYPE 347 ANNEALED 2D FINISH (ON 12044, 12044-6 & 12044-8 ONLY)
-7	1	3/8 x .032 x 6 1/4	COPPER TUBE (12044-6)
	4	1/8 x 1/4 L.	2S ALUM. BR. HD. RIVET
	8	1/8 x 1/4 L.	STEEL RD. HD. RIVET
	2	LOWER HALF OF CATCH #1809P PURCH. CORBIN CABINET LOCK CO.	
90150-2	2	FIBER STRIP	
12033-2	2	ANGLE	
-5	1	3/8 x .032 x 2 1/4	COPPER TUBE (ON 12044 & 12044-8 ONLY)
-4	2	1/16 x 1 1/2 x 1 1/2	HARD FIBER
-2	1	.020 x 6 5/8 x 27 1/8	ST. STL. TYPE 347 ANNEALED 2D FIN.

LET.	REVISION	DATE	BY
H	-15 & NOTES ADDED	3-2-51	L.H.H.
G	-13 & -14 ADDED	12-4-50	R.M.
F	-12 ADDED	6-23-50	C.K.
E	1/4 WAS 3/8; 1/2 WAS 3/8; 1 3/4 WAS 2 1/8; 2 3/8 WAS 2; -11 TUBE WAS -5 (ON 12044-9)	2-15-50	C.K.
D	-9 ADDED	11-3-49	K.D.
C	-8 ADDED; -4 RELOCATED	3-2-49	C.K.
B	2 1/8 WAS 1 3/4; TUBE MOVED	1-17-49	R.M.
A	-6 ADDED	7-10-44	[illegible]

THIS DRAWING IS THE PROPERTY OF THE PIPER AIRCRAFT CORP. AND ITS POSSESSION BY UNAUTHORIZED PERSONS SHALL NOT BE CONSTRUED AS PERMISSION TO REPRODUCE FOR SALE, IN WHOLE OR IN PART, ANY DEVICES SHOWN THEREON

MODEL | PER PLANE | NEXT ASSEMBLY | SUPERSEDES | SUP. BY

PIPER AIRCRAFT CORP.
LOCK HAVEN, PENNA.

SCALE 6 IN. = 1 FT. & NOTED | TOTAL WT.—LBS.
FINISH—PIPER SPECIFICATION #10
MANUFACTURING PRACTICES—PIPER SPECIFICATION #9

BOX ASSEMBLY-BATTERY

DRAFTSMAN	CHECKER	STANDARDS
J.C.B. 9-17-48	H.R.K. 9-17-48	

12044

726

A726

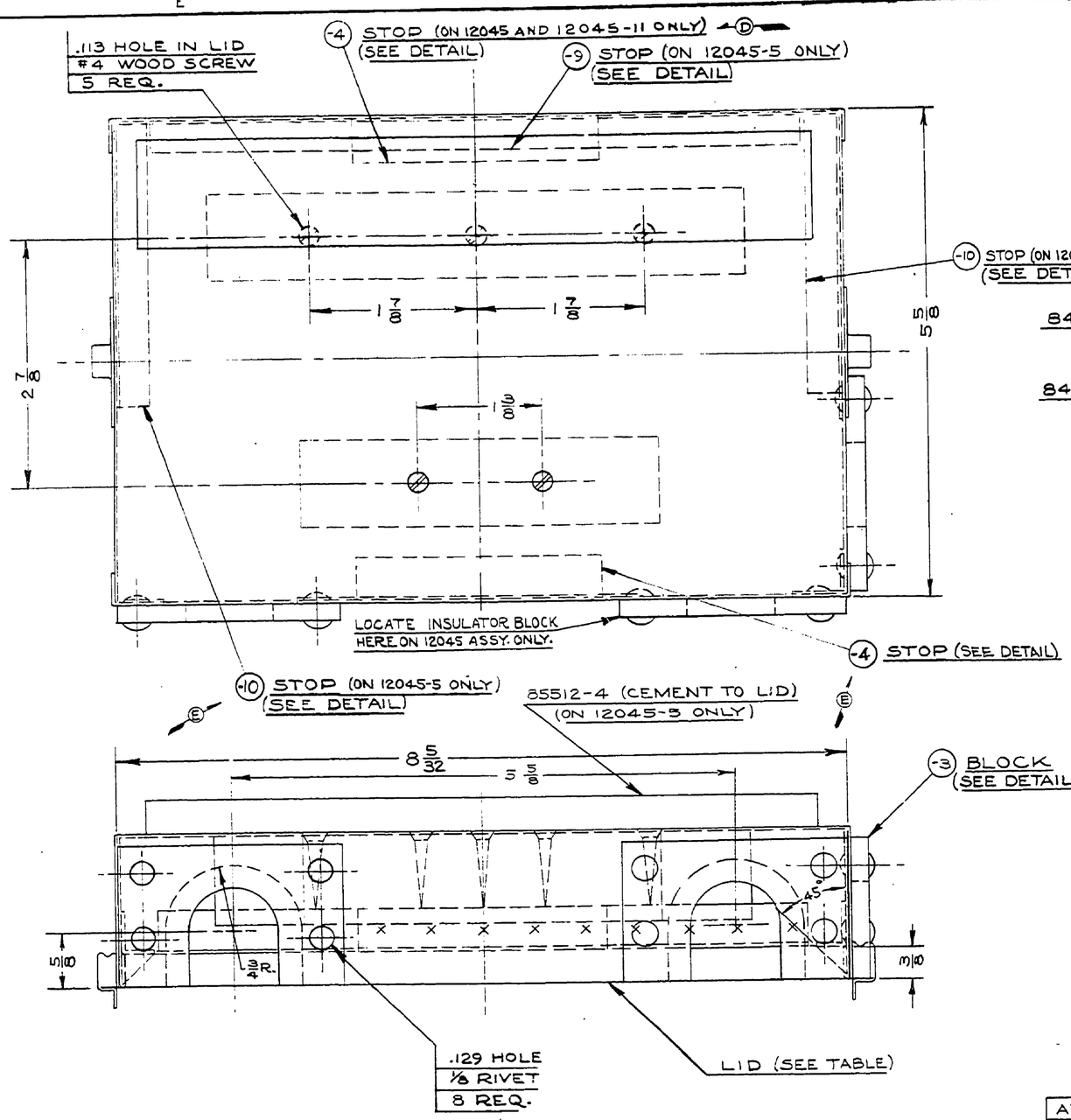

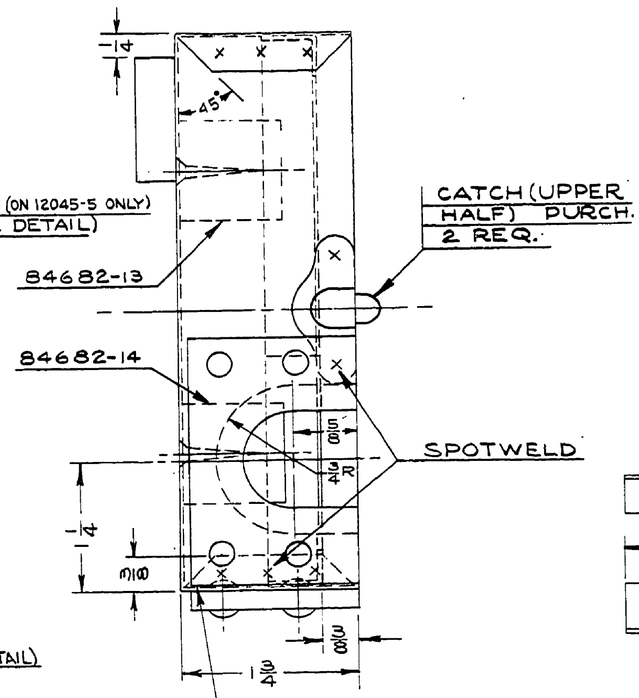

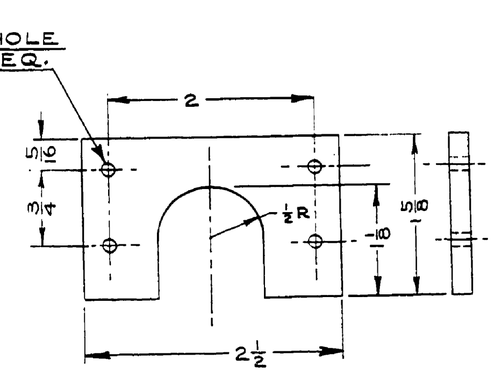

-3 DETAIL

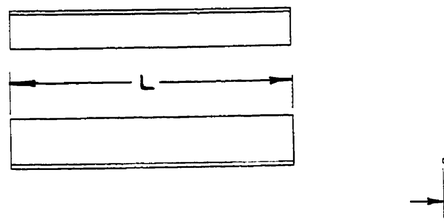

-4,-7,-8,-9 & -10 DETAIL

PART NO.	L	W
-4	2 3/4	1/2
-7	4 1/2	3/8
-8	5	3/8
-9	7 1/4	3/8
-10	3 1/4	3/8

NOTE:
INSIDE OF LID TO BE PAINTED
WITH ACID RESISTANT PAINT.

ASSY. NO	LID NO.
12045	12045-2
12045-5	12045-6
12045-11	12045-12

PART NO.	NO. REQ.	SIZE	DESCRIPTION
84682-13	1		WOOD BLOCK
-12	1	.020×9 7/8×12 3/8	ST. STL. TYPE 347 ANNEALED 2D FIN ON 12045-11 ONLY
	5	#4×3/8L	FL. HD. WOOD SCREW
	8	1/8×3/8L	2S ALUM BR. HD. RIVET
	2		UPPER HALF OF CATCH # 1809P PURCH. CORBIN CABINET LOCK CO.
85512-4	1		RUBBER STRIP ON 12045-5 ONLY
84682-14	1		WOOD BLOCK
-10	2	.032×7/8×3 1/4	ST. STL. TYPE 347 ANNEALED 2D FIN. ON 12045-5 ONLY
-9	1	.032×7/8×7 1/4	
-8	1	.032×7/8×5	
-7	1	.032×7/8×4 1/2	
-4	2	.032×1×2 3/4	ON 12045 AND 12045-11 ONLY
	1		ON 12045-5 ONLY
-3	2	3/16×1 5/8×2 1/2	HARD FIBER
-6	1	.020×9 7/8×12 3/8	ST. STL. TYPE 347 ANNEALED 2D FIN ON 12045-5 ONLY
-2			ON 12045 ONLY

LET.	REVISION	DATE	BY
E	-10 WAS -8 & -4 WAS -7	3-19-51	M.G.
D	-11, -12 & NOTES ADDED	3-2-51	I.M.M.
C	4 1/2 L. WAS 5 FOR -7, 5 L. WAS 5 1/2 FOR -8	2-21-51	I.M.M.
B	REDRAW & REVISED	12-1-50	FCS

THIS DRAWING IS THE PROPERTY OF THE PIPER AIRCRAFT CORP. AND ITS POSSESSION BY UNAUTHORIZED PERSONS SHALL NOT BE CONSTRUED AS PERMISSION TO REPRODUCE FOR SALE, IN WHOLE OR IN PART, ANY DEVICES SHOWN THEREON

MODEL	PER PLANE	NEXT ASSEMBLY	SUPERSEDES	SUP. BY

PIPER AIRCRAFT CORP.
LOCK HAVEN, PENNA.

SCALE FULL SIZE
FINISH—PIPER SPECIFICATION #10
MANUFACTURING PRACTICES—PIPER SPECIFICATION #9
MATERIAL
TOTAL WT.—LBS.

LID ASSEMBLY - BATTERY BOX

DRAFTSMAN	CHECKER	STANDARDS
F. C. S. 12-1-50	H. R. K. 12-4-50	

12045

727

A727

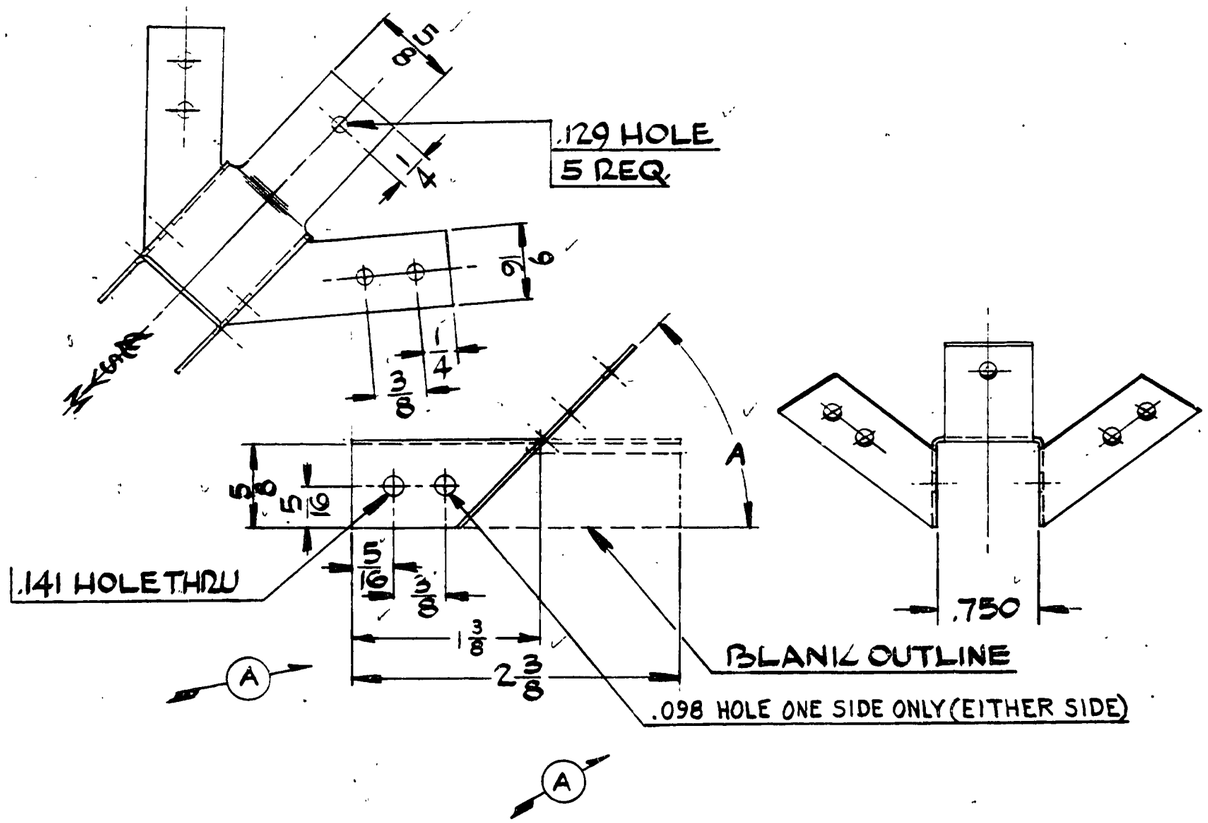

PART NO.	A
12056	47°
12056-2	77°

LET.	REVISION	DATE	BY
A	.098 HOLE WAS .141 HOLE TABLE & -2 ADDED; 3/4 DIM. REM.; 1 5/8 DIM. ADD.	11-17-49	C.K.

MODEL | PER PLANE | NEXT ASSEMBLY | SUPERSEDES | SUP. BY

THIS DRAWING IS THE PROPERTY OF THE PIPER AIRCRAFT CORP. AND ITS POSSESSION BY UNAUTHORIZED PERSONS SHALL NOT BE CONSTRUED AS PERMISSION TO REPRODUCE FOR SALE, IN WHOLE OR IN PART, ANY DEVICES SHOWN THEREON.

PIPER AIRCRAFT CORP.
LOCK HAVEN, PENNA.

PART NO.	No. REQ.	.032×2×2 3/8 SIZE	#1025 STL DESCRIPTION MATERIAL

SCALE FULL SIZE | TOTAL WT.—LBS.

FINISH—PIPER SPECIFICATION #10

MANUFACTURING PRACTICES—PIPER SPECIFICATION #9

CLAMP - AILERON HINGE BRACKET

DRAFTSMAN	CHECKER	STANDARDS
RE 10-6-48	H. R. K. 10-7-48	

12056

A482

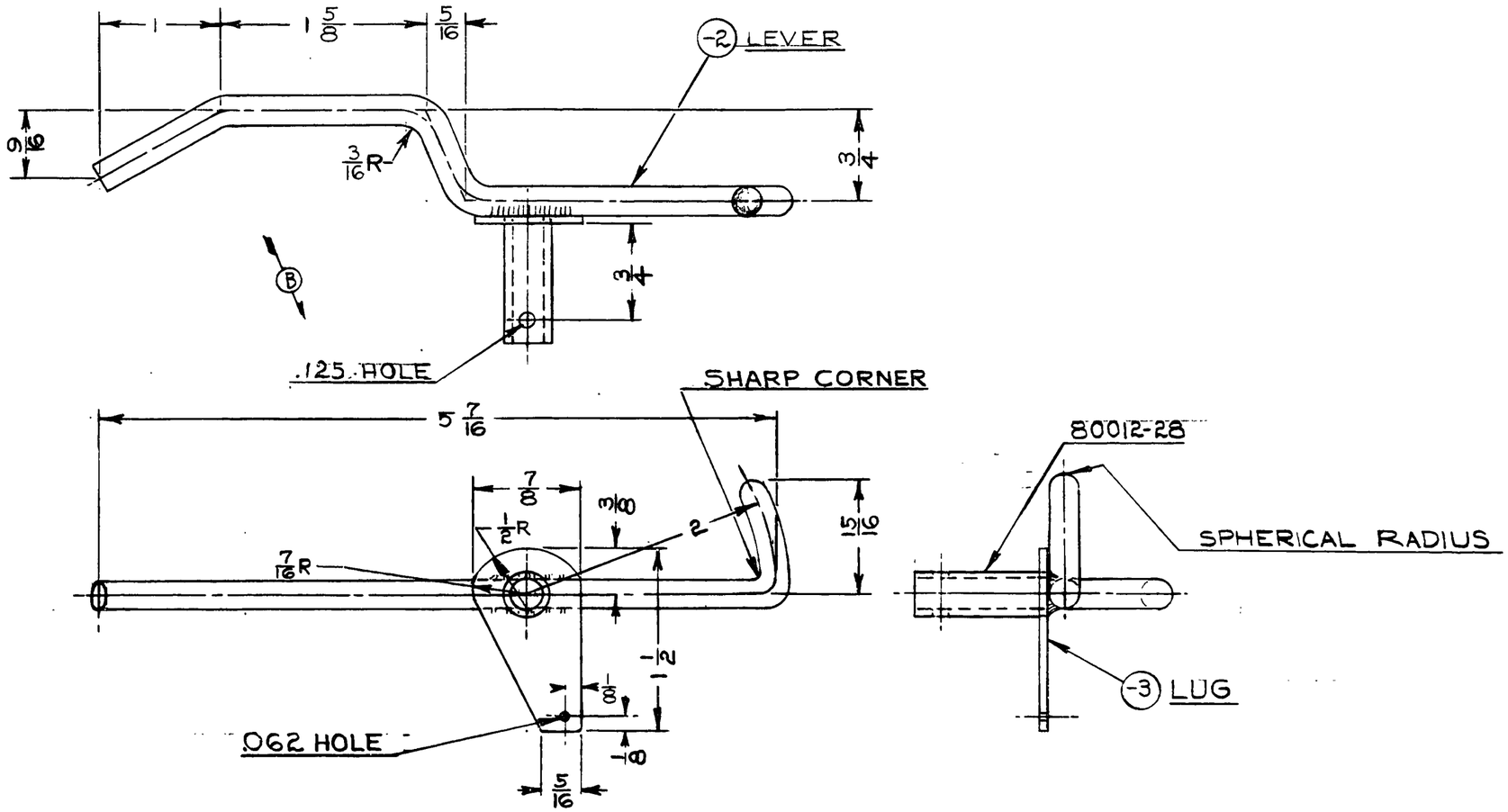

					MODEL	PER PLANE	NEXT ASSEMBLY	SUPERSEDES	SUP. BY
B	.125 HOLE WAS .062 HOLE	12-5-49	K.D.						
A	REDRAWN + REVISED	12-31-48	RM						
LET.	REVISION	DATE	BY						

THIS DRAWING IS THE PROPERTY OF THE PIPER AIRCRAFT CORP. AND ITS POSSESSION BY UNAUTHORIZED PERSONS SHALL NOT BE CONSTRUED AS PERMISSION TO REPRODUCE FOR SALE, IN WHOLE OR IN PART. ANY DEVICES SHOWN THEREON.

PIPER AIRCRAFT CORP.
LOCK HAVEN, PENNA.

PART No.	No. REQ.	SIZE	MATERIAL / DESCRIPTION
80012-28	1		BUSHING
-3	1	.062 × 7/8 × 1 1/2	*1025 STEEL
-2	1	1/4 DIA. × 7	C.F. STEEL

SCALE FULL SIZE — TOTAL WT.–LBS.

FINISH–PIPER SPECIFICATION #10

MANUFACTURING PRACTICES–PIPER SPECIFICATION #9

LEVER ASSEMBLY– SEAT CATCH

DRAFTSMAN	CHECKER	STANDARDS
R.T.M. 12-30-48	J.C.B. 1-15-49	

12079

483

A483

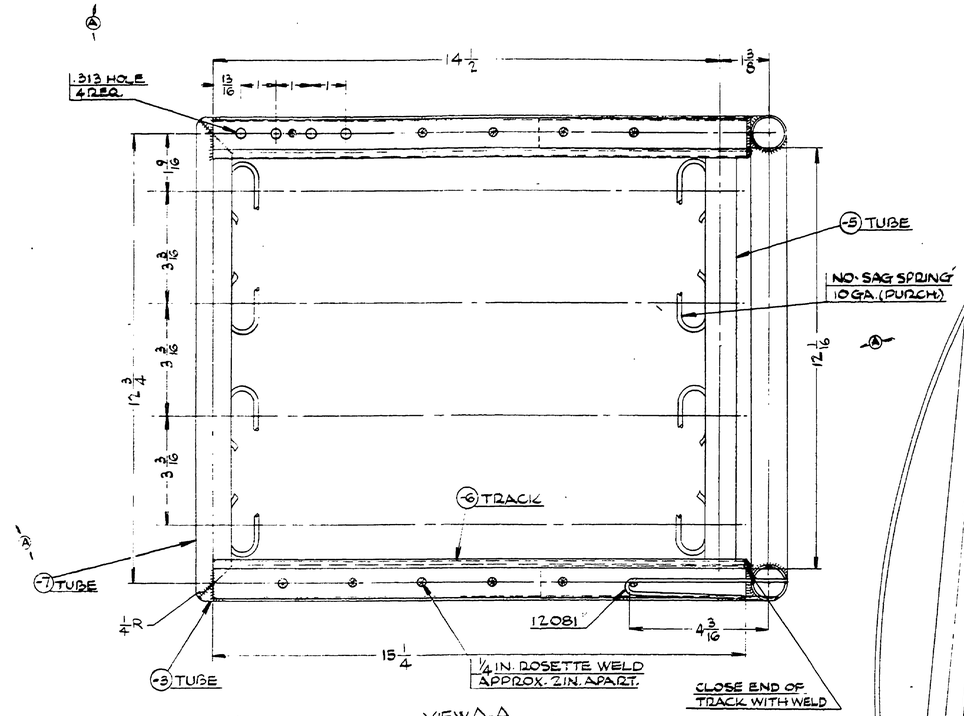

VIEW A-A

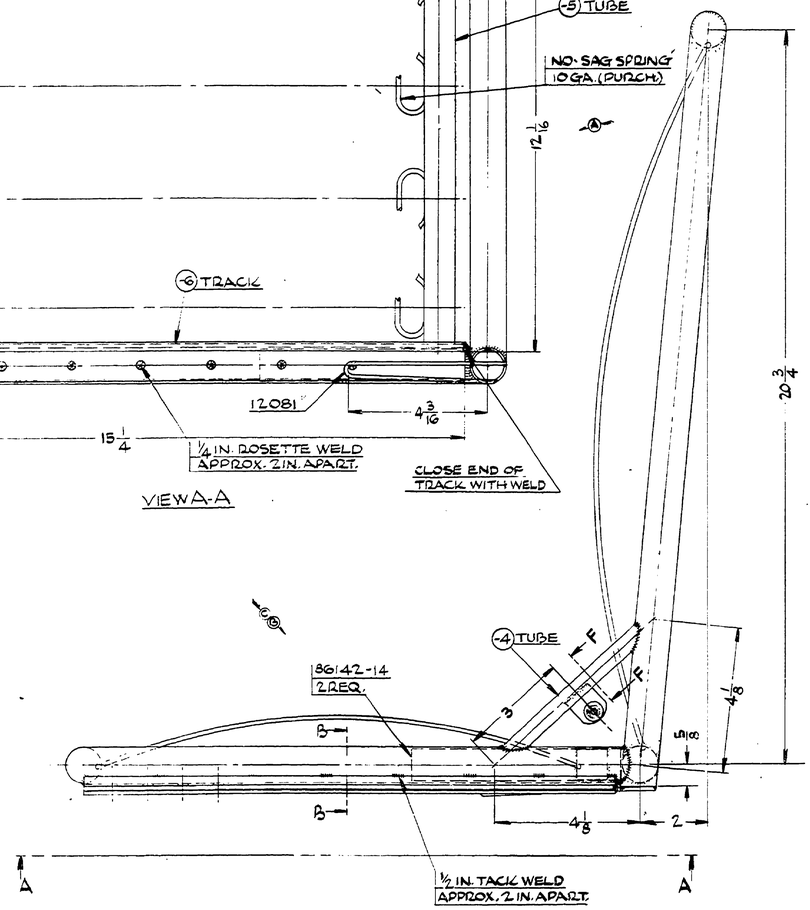

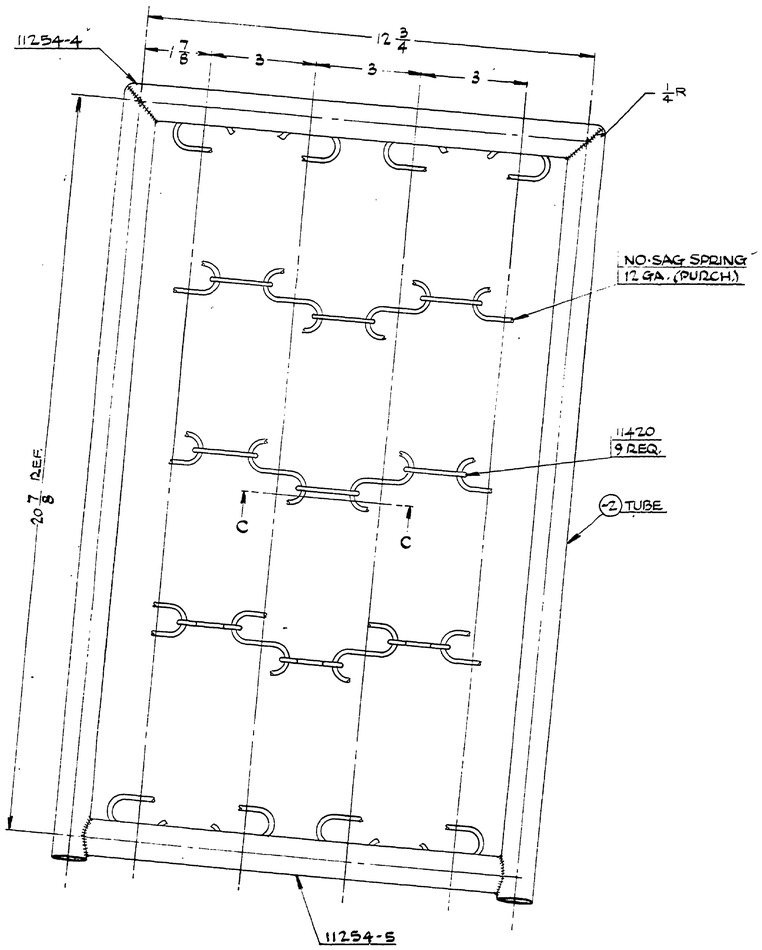

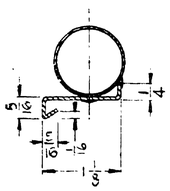

SECTION B-B
FULL SIZE

BEND ENDS AS SHOWN

SECTION C-C
FULL SIZE

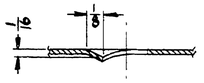

SECTION D-D
TWICE SIZE

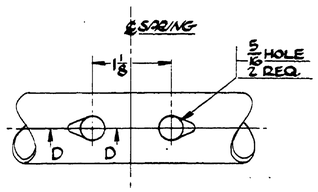

FIG. 1
TYPICAL HOLE FOR SPRING INST.
FULL SIZE

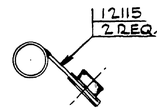

SECTION F-F
FULL SIZE

	4	12 GA × 1 9/16 L.	NO-SAG SPRING
	4	10 GA × 1 3/16 L.	PURCH KAY MFG CO.
86142-14	2	TUBE	
85551	REF	SQUARE TUBE SECTION	
12081	1	STOP	
11420	9	LINK	
11254-3	1	TUBE	
11254-4	1	TUBE	
12115	2	LUG ASS'Y.	
-7	1	9/16 × .046 I.D. × .028 × 13 3/4	"4130 S.S.T.
-6	2	.062 × 2 × 15 1/4	"1025 ST'L.
-5	1	12 1/2 L.	PIPER SECTION 85551
-4	2	1/2 × .028 × 6	"1025 S.S. TUBE
-3	2	9/16 × .046 I.D. × .028 × 16 1/2	"4130 SEAMLESS
-2	2	9/16 × .046 I.D. × .028 × 2 1/4	ST'L. TUBE
PART No.	No. REQ.	SIZE	DESCRIPTION
		MATERIAL	

SCALE QUIN-1FT. 2 NOTED | TOTAL WT.—LBS.
FINISH—PIPER SPECIFICATION #10
MANUFACTURING PRACTICES—PIPER SPECIFICATION #8

FRAME ASSEMBLY- LEFT FRONT SEAT

LET.	REVISION	DATE	BY
C	86142-14 WAS 86102-14 ON FACE	5-15-46	RC
B	86142-14 ADDED	2-24-49	RC
A	-7 WAS 11254-2 -6 WAS 3/4 X .035 X 15 1/4 LESS 2 HOLES ADDED 12 WAS 11116 -5 WAS -4 -4 WAS -3 -3 WAS -2 12115 ADDED	3-31-48	RC

MODEL PER PLANE | NEXT ASSEMBLY | SUPERSEDES | SUP. BY

THIS DRAWING IS THE PROPERTY OF THE PIPER AIRCRAFT CORP. AND ITS POSSESSION BY UNAUTHORIZED PERSONS SHALL NOT BE CONSTRUED AS PERMISSION TO REPRODUCE FOR SALE, IN WHOLE OR IN PART. ART DEVICES SHOWN THEREON.

PIPER AIRCRAFT CORP.
LOCK HAVEN, PENNA.

DRAFTSMAN	CHECKER	STANDARDS	12086
RC 11-18-46			

Philadelphia Blue Print Co. 150 4-48

A840

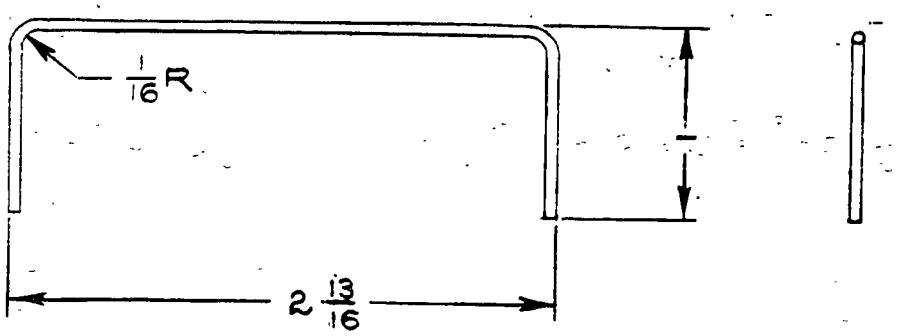
1/16 R
2 13/16

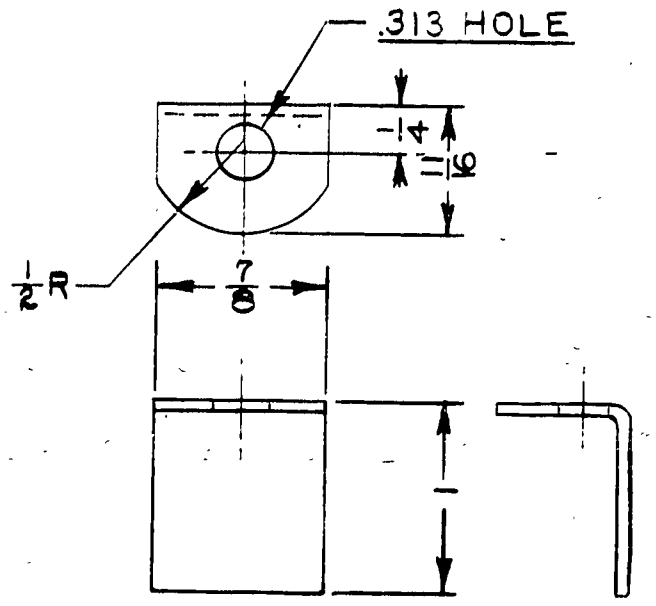

LET.	REVISION	DATE	BY	MODEL	PER PLANE	NEXT ASSEMBLY	SUPERSEDES	SUP. BY	

THIS DRAWING IS THE PROPERTY OF THE PIPER AIRCRAFT CORP. AND ITS POSSESSION BY UNAUTHORIZED PERSONS SHALL NOT BE CONSTRUED AS PERMISSION TO REPRODUCE FOR SALE, IN WHOLE OR IN PART, ANY DEVICES SHOWN THEREON.

PIPER AIRCRAFT CORP.
LOCK HAVEN, PENNA.

PART No.	No. REQ.	SIZE	MATERIAL
		.062 x 7/8 x 1 11/16	#1025 STEEL

SCALE FULL SIZE — TOTAL WT.–LBS.

FINISH–PIPER SPECIFICATION #10

MANUFACTURING PRACTICES–PIPER SPECIFICATION #9

LUG-SEAT LEVER GUIDE

DRAFTSMAN	CHECKER	STANDARDS	
R.T.M. 12-31-48	J.C.B. 1-13-49		12122

94

A-94

Numbers 1, 23, 27, 28 Not Use

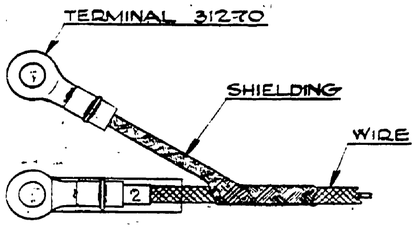

BONDING DETAIL

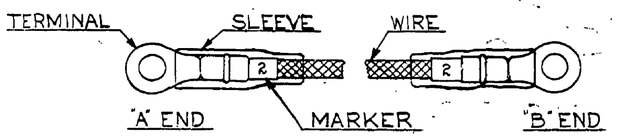

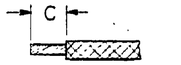

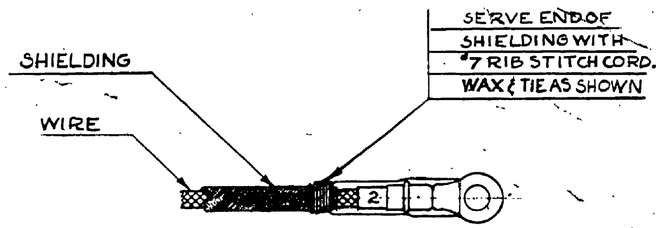

SHIELDING INSTALLATION

PART NO.	MARKER NO.	WIRE GA.	WIRE LENGTH	"A" END PURCH. PART NO.	"A" END SLEEVE	"A" END C	"B" END PURCH. PART NO.	"B" END SLEEVE	"B" END C	REMARKS
12177-2	10	18	5½	30997	90797-3	3/16	NONE	NONE	3/16	
12177-3	11	18	44	31096	90797-2	3/16	31770	90797-5	3/16	
12177-4	12	18	36	NONE	NONE	3/16	31770	90797-5	3/16	
12177-5	2	10	15	31771	90797-4	3/16	31826	90797-4	5/16	
12177-6	14	18	4	31096	90797-2	3/16	31096	90797-2	3/16	
12177-7	15	18	4	31096	90797-2	3/16	30997	90797-3	3/16	
12177-8	13	10	36	31826	90797-4	5/16	31826	90797-4	5/16	
12177-9	20	18	199½	31770	90797-5	3/16	NONE	NONE	5/16	
12177-10	16	18	49½	NONE	NONE	5/16	31770	90797-5	3/16	
12177-11	17	18	8½	31770	90797-5	3/16	NONE	NONE	5/16	
12177-12	19	18	159	31770	NONE	3/16	NONE	NONE	1/4	
12177-13	18	18	159	31770	NONE	3/16	NONE	NONE	1/4	
12177-14	22	18	65	31096	90797-2	3/16	31770	90797-5	3/16	
12177-15	24	18	8½	31770	90797-5	3/16	NONE	NONE	5/16	
12177-16	7	10	2¾	31771	90797-4	3/16	31826	90797-4	5/16	
12177-17	2	10	5½	31828	90797-4	5/16	31826	90797-4	5/16	
12177-18	3	10	91	31826	90797-4	5/16	31826	90797-4	5/16	
12177-19	4	18	84	31251	90797-2	3/16	31270	90797-2	3/16	
12177-20	6	18	81	30997	90797-3	3/16	31270	90797-2	3/16	
12177-21	8	10	80	31771	90797-4	3/16	31826	90797-4	3/16	
12177-22	5	10	10	31771	90797-4	3/16	31772	90797-4	3/16	
12177-23	9	18	5	31270	90797-2	3/16	NONE	NONE	5/16	
12177-24	10	18	6	31770	90797-5	3/16	NONE	NONE	5/16	
12177-25	11	18	34	31770	90797-5	3/16	NONE	NONE	5/16	
12177-26	12	18	78	31770	90797-5	3/16	NONE	NONE	5/16	
12177-27	14	18	48	31096	90797-2	3/16	31270	90797-2	3/16	
12177-28	13	18	126	31770	90797-12	3/16	31770	NONE	3/16	
12177-29	15	18	100	31096	90797-2	3/16	31270	90797-2	3/16	
12177-30	—	18	5	31770	90797-5	3/16	NONE	NONE	3/16	
12177-31	25	18	33	31770	NONE	3/16	NONE	NONE	5/16	
12177-32	—	10	2	31826	90797-4	5/16	31826	90797-4	5/16	
12177-33	—	10	8	31826	90797-4	5/16	31826	90797-4	5/16	
12177-34	—	10	24	31826	90797-4	5/16	31826	90797-4	5/16	

PART NO.	MARKER NO.	WIRE GA.	WIRE LENGTH	"A" END PURCH. PART NO.	"A" END SLEEVE	"A" END C	"B" END PURCH. PART NO.	"B" END SLEEVE	"B" END C	REMARKS
12177-35	—	10	60	31826	90797-4	5/16	31826	90797-4	5/16	
12177-36	—	10	100	31826	90797-4	5/16	31826	90797-4	5/16	
12177-37	—	10	132	31826	90797-4	5/16	31826	90797-4	5/16	
12177-38	22	18	89	31096	90797-2	3/16	31770	90797-5	3/16	
12177-39		18	31	31770	90797-14	3/16	NONE	NONE	5/16	
12177-40	15	18	58	31096	90797-2	3/16	31270	90797-2	3/16	
12177-41	14	18	84	31096	90797-2	3/16	31270	90797-2	3/16	
12177-42	29	18	6	31270	90797-2	3/16	31270	90797-2	3/16	
12177-43	7	18	12	31096	90797-2	3/16	31096	90797-2	3/16	
12177-44	—	18	3½	31096	NONE	3/16	NONE	NONE	3/16	
12177-45	4	18	10	31096	90797-2	3/16	31096	90797-2	3/16	
12177-46	5	18	60	31096	90797-2	3/16	31770	NONE	3/16	
12177-47	6	10	36	31771	90797-4	3/16	31826	90797-4	5/16	
12177-48	25	10	4	31771	90797-4	3/16	31826	90797-4	5/16	
12177-49	8	18	5	31770	90797-5	3/16	NONE	NONE	3/16	
12177-50	9	18	99	31770	NONE	3/16	NONE	NONE	3/16	
12177-51	11	18	45	31770	NONE	3/16	NONE	NONE	3/16	
12177-52	12	18	8	31770	90797-5	3/16	NONE	NONE	3/16	
12177-53	13	18	100	31270	90797-3	3/16	31096	90797-2	3/16	
12177-54	14	10	27	31771	90797-4	3/16	31826	90797-4	5/16	SHIELDED BOND BOTH ENDS
12177-55	3	18	108	31270	90797-2	3/16	31251	90797-2	3/16	SHIELDED BOND "A" END
12177-56	20	18	51	31270	90797-2	3/16	30997	90797-3	3/16	SHIELDED BOND BOTH ENDS
12177-57	21	18	166	31770	NONE	3/16	NONE	NONE	5/16	
12177-58	26	18	53	31770	NONE	3/16	NONE	NONE	5/16	
12177-59	30	10	56	31772	90797-4	3/16	31771	90797-4	3/16	SHIELDED BOND "B" END
12177-60	—	18	93	31770	90797-5	3/16	NONE	NONE	3/16	
12177-61	—	18	15	31270	90797-2	3/16	NONE	NONE	3/16	
12177-62	2	10	3½	31828	90797-4	5/16	31826	90797-4	5/16	
12177-63	—	10	33	31826	90797-4	5/16	31826	90797-4	5/16	
12177-64	—	10	7	31826	90797-4	5/16	31826	90797-4	5/16	
12177-65	—	10	3	31826	90797-4	5/16	31826	90797-4	5/16	
12177-66	17	18	43	31771	90797-2	3/16	31826	90797-2	3/16	
12177-67	16	18	60	31096	90797-2	3/16	31770	NONE	3/16	

PART NO.	MARKER NO.	WIRE GA.	WIRE LENGTH	"A" END PURCH. PART NO.	"A" END SLEEVE	"A" END C	"B" END PURCH. PART NO.	"B" END SLEEVE	"B" END C	REMARKS
12177-68	18	18	127	31096	90797-2	3/16	31770	90797-5	3/16	
12177-69	19	18	12	31096	90797-2	3/16	31096	90797-2	3/16	
12177-70	—	10	38	31826	90797-4	5/16	31826	90797-4	5/16	
12177-71	—	10	8	31826	90797-4	5/16	31771	90797-4	3/16	
12177-72	—	10	142	31826	90797-4	5/16	31826	90797-4	5/16	
12177-73	—	18	6	31270	90797-2	3/16	31096	90797-2	3/16	
12177-74	—	18	6	31270	90797-2	3/16	30997	90797-3	3/16	
12177-75	—	10	55	31826	90797-4	3/16	31826	90797-4	3/16	SHIELDED BOND BOTH ENDS
12177-76	—	10	4	31826	90797-4	3/16	31826	90797-4	3/16	
12177-77	—	18	2½	31270	90797-2	3/16	31270	90797-2	3/16	
12177-78	—	18	93	31770	90797-5	3/16	31770	90797-5	3/16	
12177-79	—	18	3	30997	90797-3	3/16	NONE	NONE	3/16	
12177-80	—	18	7	31270	90797-2	3/16	31270	90797-2	3/16	
12177-81	—	18	78	31770	90797-5	3/16	31770	NONE	3/16	
12177-82	—	18	36	31770	90797-5	3/16	31770	NONE	3/16	
12177-83	25	10	40	31771	90797-4	3/16	31826	90797-4	5/16	
12177-84	—	18	8	30997	90797-3	3/16	31096	90797-2	3/16	
12177-85	6	10	74	31771	90797-4	3/16	31826	90797-4	5/16	
12177-86	3	10	76	31826	90797-4	5/16	31826	90797-4	5/16	
12177-87	15	18	88	31096	90797-2	3/16	31270	90797-2	3/16	
12177-88	15	18	130	31096	90797-2	3/16	31270	90797-2	3/16	
12177-89	—	10	100	31942	90797-8	5/16	31826	90797-4	5/16	
12177-90	—	10	33	31942	NONE	5/16	31826	90797-4	5/16	
12177-91	—	10	38	31942	90797-8	5/16	31826	90797-4	5/16	
12177-92	—	10	142	31942	NONE	5/16	31826	90797-4	5/16	
12177-93	—	10	132	31942	90797-8	5/16	31826	90797-4	5/16	
12177-94	—	10	60	31942	NONE	5/16	31826	90797-4	5/16	
12177-95	—	18	3	NONE	NONE	3/16	NONE	NONE	3/16	
12177-96	—	18	2	31270	NONE	3/16	NONE	NONE	3/16	
12177-97	—	18	12	31096	90797-2	3/16	NONE	NONE	3/16	
12177-98	—	10	146	31942	NONE	5/16	31826	90797-4	5/16	

NOTES:
1. WIRE TO BE SINGLE CONDUCTOR, SPEC. AN-J-C-48A.
2. TERMINALS PURCHASED, AIRCRAFT-MARINE PRODUCTS, INC. UNLESS OTHERWISE NOTED.
3. MARKERS PURCHASED, WESTERN LITHOGRAPH CO., OR EQUIVALENT.

NOTES: (CONT.)
4. SHIELDING USED IS PACKARD #690-D, PURCHASED GENERAL MOTORS CORPORATION, PACKARD DIVISION.

SEE ALSO 10128

X	-98 ADDED	5-14-51	L.E.M.
W	-97 ADDED	4-18-51	C.K.
V	-95 & -96 ADDED	4-2-51	C.K.
U	-93 & -94 ADDED	3-21-51	W.H.K.
T	-89, -90, -91, -92 ADDED	2-16-51	W.H.K.
S	-86, -87 & -88 ADDED	1-3-51	H.R.K.
R	-79 THRU -85 ADDED	9-29-50	K.D.
Q	ON -50, 99 WAS 63; ON -51, 45 WAS 42	7-20-50	K.D.
P	-78 ADDED	7-17-50	K.D.
LET	REVISION	DATE	BY

O	-76 & -77 ADDED	6-27-50	D.C.
N	-75 ADDED	4-11-50	D.C.
M	-73 & -74 ADDED	3-29-50	C.K.
L	BONDING DETAIL ADDED FOR -54, -55, -56, & -59	3-15-50	D.C.
K	-72 ADDED ON -18, 31 WAS 79; ON -19, 84 WAS 96; ON -20, 81 WAS 93; ON -21, 80 WAS 98; ON -25, 5 WAS 16½; ON -27, 48 WAS 60; ON -41, 84 WAS 96; ON -56, 48 WAS 33	2-6-50	H.R.K.
J	-66, -67, -68, -69, -70 & -71 ADDED	1-24-50	J.D.
H	-63, -64 & -65 ADDED: 100 WAS 108 FOR -36	1-18-50	J.D.
LET	REVISION	DATE	BY

G	31770 REM. FOR -58, ALSO 159 WAS 156 FOR -12 & -13, 12 WAS 15 FOR -43, 60 WAS 54 FOR -46, 100 WAS 93 FOR -53, 53 WAS 52 FOR -58, 52 WAS 48 FOR -59, 98 WAS 86 FOR -60, -61 & -62 ADDED	1-16-50	J.D.
F	-42 TO -60 INC. ADDED	11-3-49	K.D.
E	-40, -41 ADDED	9-30-49	R.M.
D	-32, -33, -34, -35, -36, -37, -38, -39 ADDED	9-19-49	R.R.
C	LENGTH OF -25 100 WAS 58; LENGTH OF -27 60 WAS 96	9-10-49	R.M.
B	2-43-7 REV. -30 & -31	8-5-49	J.C.
A	-26 & -29 INC. ADDED	7-25-49	C.E.K.
LET	REVISION	DATE	BY

THIS DRAWING IS THE PROPERTY OF THE PIPER AIRCRAFT CORP. AND ITS POSSESSION BY UNAUTHORIZED PERSONS SHALL NOT BE CONSTRUED AS PERMISSION TO REPRODUCE FOR SALE, IN WHOLE OR IN PART, ANY DEVICES SHOWN THEREON

MODEL	PER PLANE	NEXT ASSEMBLY	SUPERSEDES	SUP. BY

PIPER AIRCRAFT CORP.
LOCK HAVEN, PENNA.

90797	USE ONLY	SLEEVE (SEE TABLE)	
PART NO.	NO. REQ.	NAME	
SCALE		MATERIAL	
		TOTAL WT.—LBS.	

FINISH—PIPER SPECIFICATION #30
MANUFACTURING PRACTICES—PIPER SPECIFICATION #2

WIRE ASSEMBLIES - SINGLE

DRAFTSMAN	CHECKER	STRESSMAN
H.R.K. 6-25-49	J.C. 7-25-49	

12177

A728

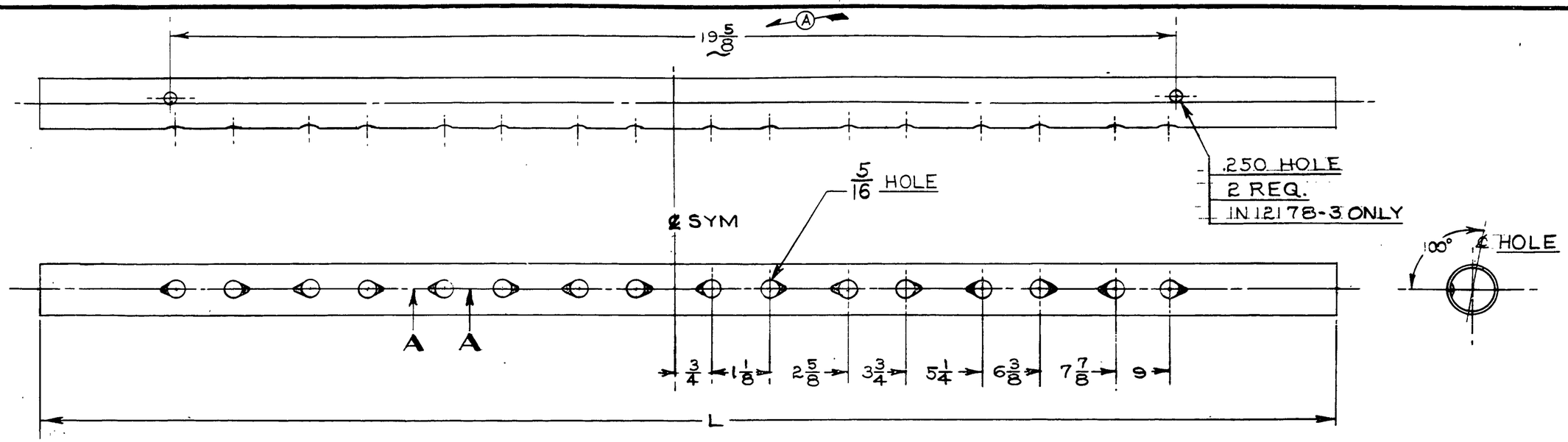

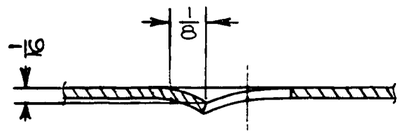

SECTION A-A
TWICE SIZE

PART NO.	L	MATL.	REMARKS
12178-2	25 1/2	1×.035 #4130 STL. TUBE	NIBBLE ENDS
12178-3	24 1/2	1×.035 #4130 STL. TUBE	TO FIT

LET.	REVISION	DATE	BY
A	19 5/8 WAS 19 7/8	6-27-49	H.R.K.

MODEL | PER PLANE | NEXT ASSEMBLY | SUPERSEDES | SUP. BY

THIS DRAWING IS THE PROPERTY OF THE PIPER AIRCRAFT CORP. AND ITS POSSESSION BY UNAUTHORIZED PERSONS SHALL NOT BE CONSTRUED AS PERMISSION TO REPRODUCE FOR SALE, IN WHOLE OR IN PART, ANY DEVICES SHOWN THEREON.

PIPER AIRCRAFT CORP.
LOCK HAVEN, PENNA.

PART NO. | NO. REQ. | MATERIAL

SCALE 6 IN = 1 FT & NOTED | TOTAL WT.—LBS.

FINISH—PIPER SPECIFICATION #10

MANUFACTURING PRACTICES—PIPER SPECIFICATION #9

TUBE - FUSELAGE SEAT

DRAFTSMAN	CHECKER	STANDARDS
R.T.M. 2-4-49	H.R.K. 2-10-49	

12178

484

A484

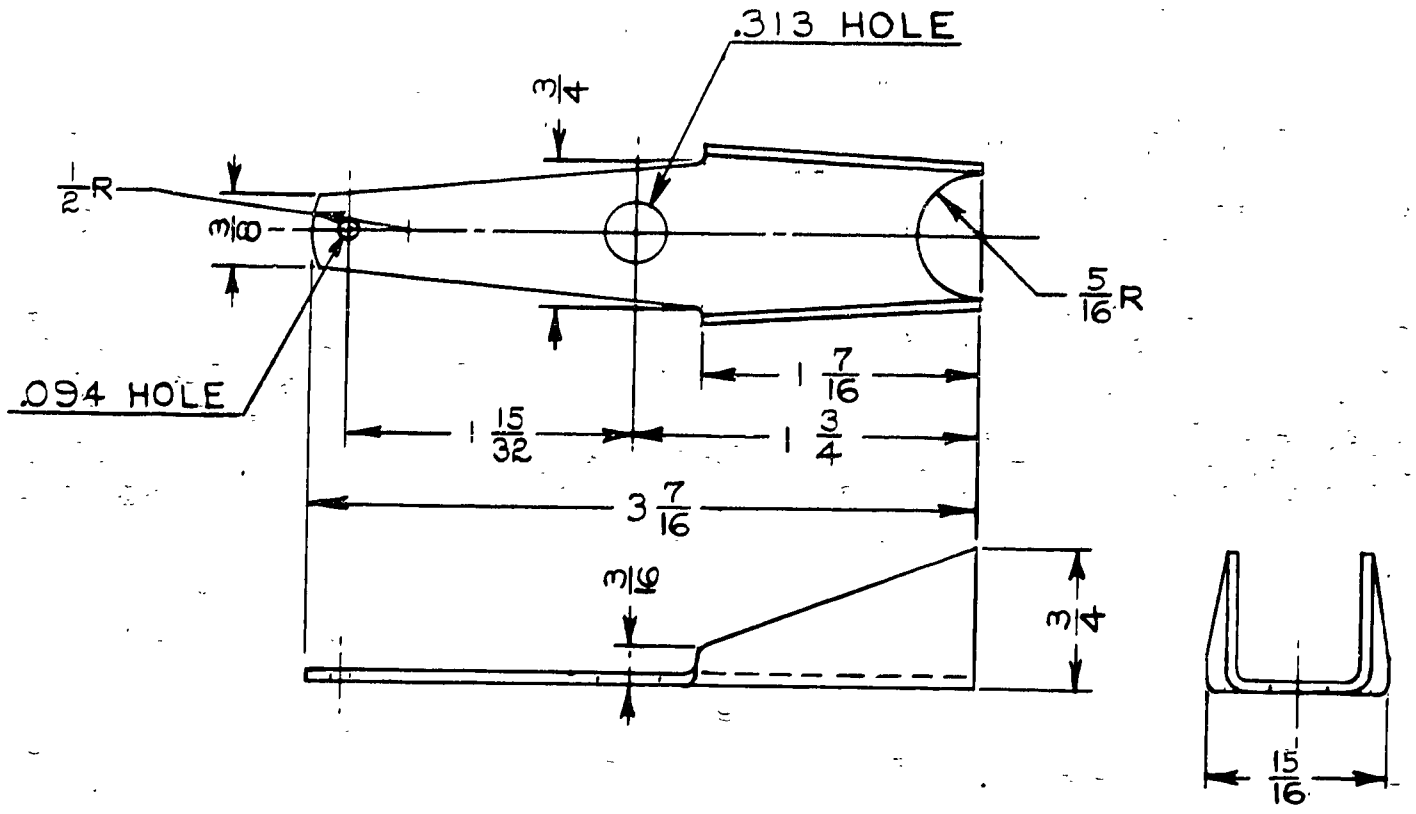

LET.	REVISION	DATE	BY	MODEL	PER PLANE	NEXT ASSEMBLY	SUPERSEDES	SUP. BY	

THIS DRAWING IS THE PROPERTY OF THE PIPER AIRCRAFT CORP. AND ITS POSSESSION BY UNAUTHORIZED PERSONS SHALL NOT BE CONSTRUED AS PERMISSION TO REPRODUCE FOR SALE, IN WHOLE OR IN PART, ANY DEVICES SHOWN THEREON.

PIPER AIRCRAFT CORP.
LOCK HAVEN, PENNA.

PART No.	No. REQ.	SIZE	MATERIAL DESCRIPTION
		.062 x 2 1/2 x 3 7/16	#1025 STEEL

SCALE FULL SIZE — TOTAL WT.–LBS.

FINISH–PIPER SPECIFICATION #10

MANUFACTURING PRACTICES–PIPER SPECIFICATION #9

BRACKET-PULLEY

DRAFTSMAN	CHECKER	STANDARDS
R.T.M. 2-4-49	H.R.K. 2-11-49	

12179

95

A95

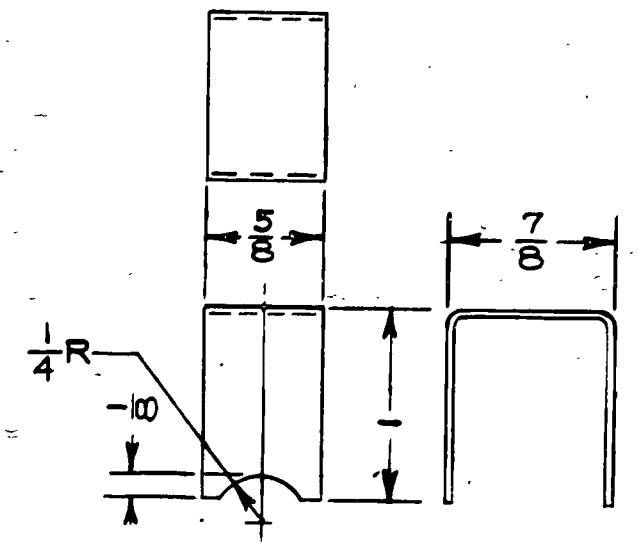

								.045 x 5/8 x 2 7/8	*1025 STEEL
							PART No.	No. REQ.	SIZE / MATERIAL / DESCRIPTION
							SCALE FULL SIZE		TOTAL WT.—LBS.
							FINISH—PIPER SPECIFICATION #10		
							MANUFACTURING PRACTICES—PIPER SPECIFICATION #9		
							BRACKET-PULLEY HOUSING SUPPORT		
LET.	REVISION	DATE	BY	MODEL	PER PLANE	NEXT ASSEMBLY	SUPERSEDES	SUP. BY	

THIS DRAWING IS THE PROPERTY OF THE PIPER AIRCRAFT CORP. AND ITS POSSESSION BY UNAUTHORIZED PERSONS SHALL NOT BE CONSTRUED AS PERMISSION TO REPRODUCE FOR SALE, IN WHOLE OR IN PART, ANY DEVICES SHOWN THEREON.

PIPER AIRCRAFT CORP.
LOCK HAVEN, PENNA.

DRAFTSMAN	CHECKER	STANDARDS	
R.T.M. 2-4-49	H.R.K. 2-10-49		12180

96

A 96

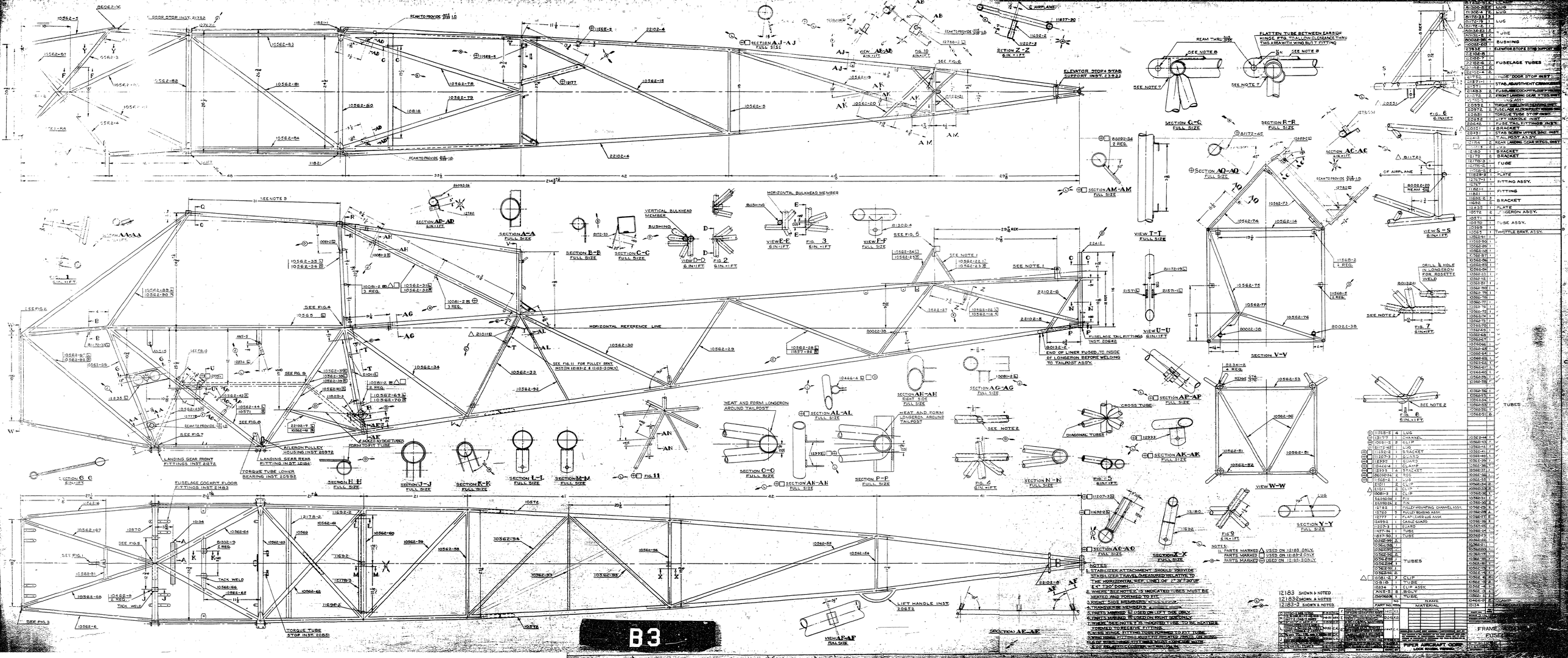

HORIZONTAL REFERENCE LINE
SECTION AJ-AJ FULL SIZE
SECTION Z-Z 6 IN.=1 FT.
SECTION AB-AB 6 IN.=1 FT.
SECTION AM-AM FULL SIZE
SECTION AD-AD 6 IN.=1 FT.
SECTION A-A FULL SIZE
SECTION B-B FULL SIZE
SECTION C-C FULL SIZE
VIEW D-D 6 IN.=1 FT.
FIG. 2 6 IN.=1 FT.
VIEW E-E 6 IN.=1 FT.
FIG. 3 6 IN.=1 FT.
VIEW F-F FULL SIZE
VIEW T-T FULL SIZE
VIEW U-U 6 IN.=1 FT.
SECTION AC-AC 6 IN.=1 FT.
SECTION AQ-AQ FULL SIZE
SECTION V-V
VIEW S-S 6 IN.=1 FT.
FIG. 6 6 IN.=1 FT.
FIG. 7 6 IN.=1 FT.
FIG. 8 6 IN.=1 FT.
SECTION AP-AP FULL SIZE
SECTION AK-AK FULL SIZE
SECTION AH-AH RIGHT SIDE FULL SIZE
SECTION AG-AG FULL SIZE
SECTION AL-AL FULL SIZE
SECTION O-O FULL SIZE
SECTION AN-AN FULL SIZE
SECTION P-P FULL SIZE
SECTION N-N FULL SIZE
FIG. 5 6 IN.=1 FT.
FIG. 4 6 IN.=1 FT.
FIG. 11
SECTION G-G 6 IN.=1 FT.
SECTION H-H FULL SIZE
SECTION J-J FULL SIZE
SECTION K-K FULL SIZE
SECTION L-L FULL SIZE
SECTION M-M FULL SIZE
VIEW W-W
SECTION Y-Y FULL SIZE
SECTION X-X FULL SIZE
SECTION AO-AO FULL SIZE
SECTION AF-AF FULL SIZE
FIG. 9 6 IN.=1 FT.
FUSELAGE TAIL FITTINGS INST. 20642
END OF LINER FUSED TO INSIDE OF LONGERON BEFORE WELDING TO TAILPOST ASSY.
HEAT AND FORM LONGERON AROUND TAILPOST
LANDING GEAR FRONT FITTINGS INST. 21272
LANDING GEAR REAR FITTING INST. 12184
TORQUE TUBE LOWER BEARING INST. 20992
AILERON PULLEY HOUSING INST. 20972
FUSELAGE COCKPIT FLOOR FITTINGS INST. 21483
TORQUE TUBE STOP INST. 20851
LIFT HANDLE INST. 20652
TACK WELD
ELEVATOR STOP & STAB. SUPPORT INST. 23932
FLATTEN TUBE BETWEEN EARSIDE HINGE FTG. TO ALLOW CLEARANCE THRU THIS AREA WITH WING BUT T FITTING
FUSELAGE TUBES
DRILL ¼ HOLE IN LONGERON FOR ROSETTE WELD
NOTES:
1. STABILIZER ATTACHMENT SHOULD PROVIDE STABILIZER TRAVEL (MEASURED RELATIVE TO THE HORIZONTAL REF. LINE) OF 2° 30' ±30' UP & 4° ±30' DOWN.
2. WHERE "SEE NOTE 2" IS INDICATED TUBES MUST BE HEATED AND FORMED TO FIT.
3. RIGHT SIDE MEMBERS
4. TRANSVERSE MEMBERS
5. PARTS MARKED ⊡ USED ON LIFT SIDE ONLY
6. PARTS MARKED ⊡ USED ON RIGHT SIDE ONLY
7. WHERE "SEE NOTE 7" IS INDICATED TUBE TO BE HEATED & FORMED TO RECEIVE FITTING.
8. WING HINGE FITTING TUBE FORMED TO FIT TUBE
9. WING HINGE FITTINGS MUST FIT RELATED PARTS ON WING
10. 6 OF WING HINGE FITTINGS MUST FORM ONE WAY
11. 6 OF REQ. 12183 CLUSTER WITHIN 1/32 IN.
12183 SHOWN & NOTED
12183-2 SHOWN & NOTED
12183-3 SHOWN & NOTED
PIPER AIRCRAFT CORP.
LOCK HAVEN, PENNA.
FRAME
FUSE
B3

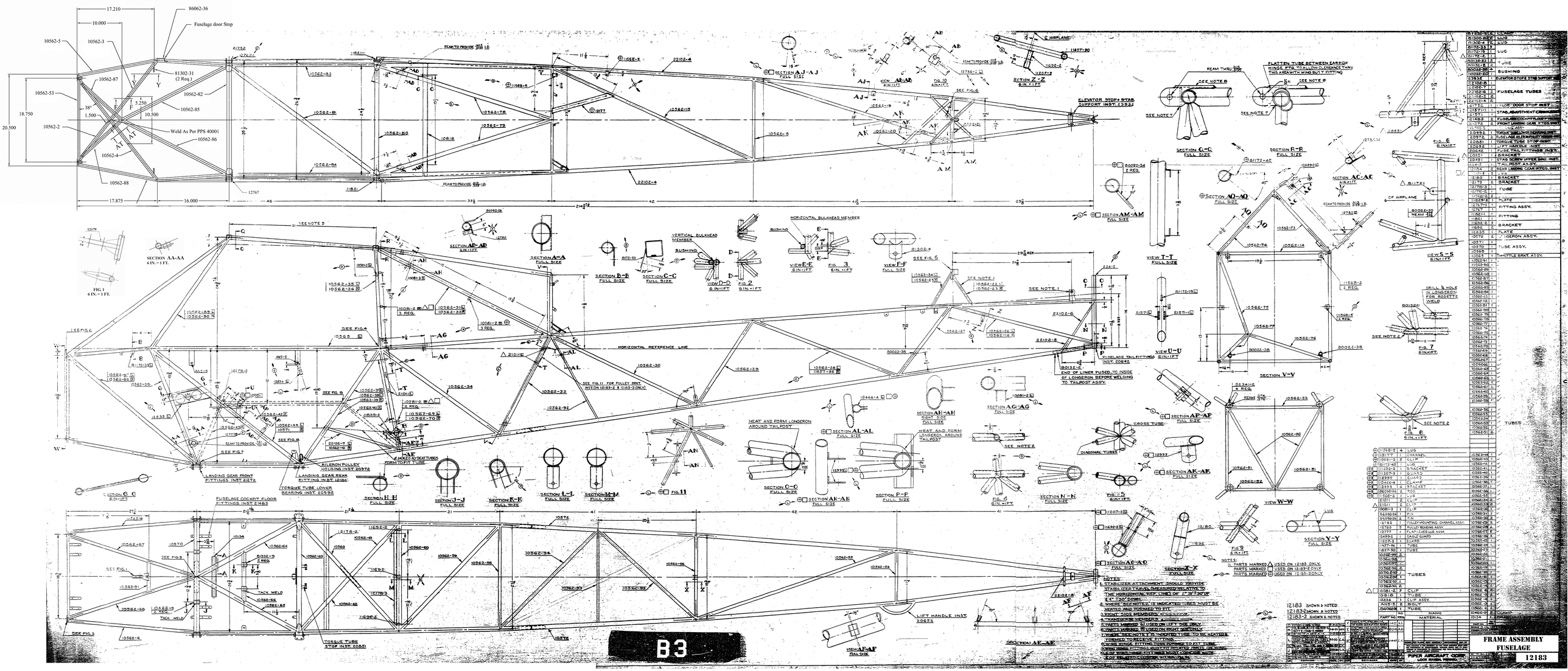
FRAME ASSEMBLY
FUSELAGE
12183
B3

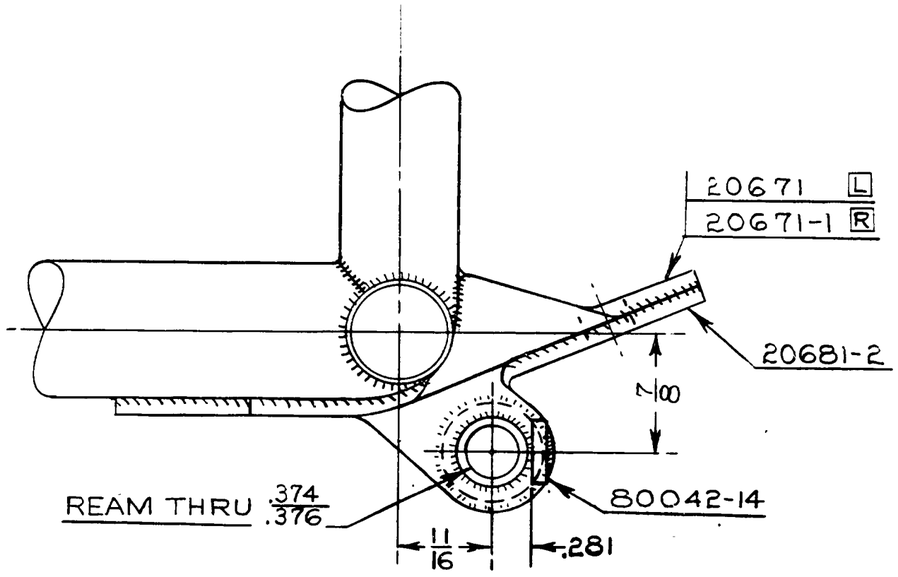

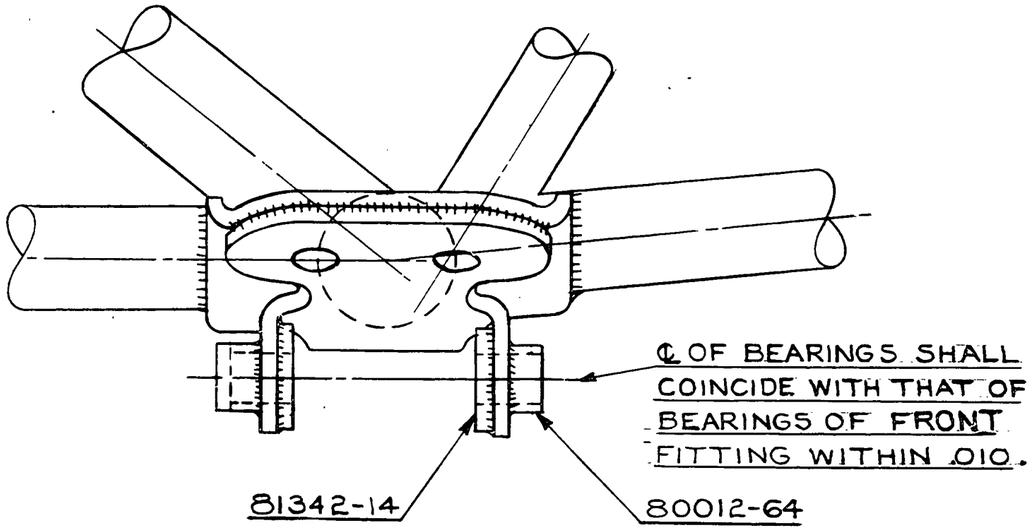

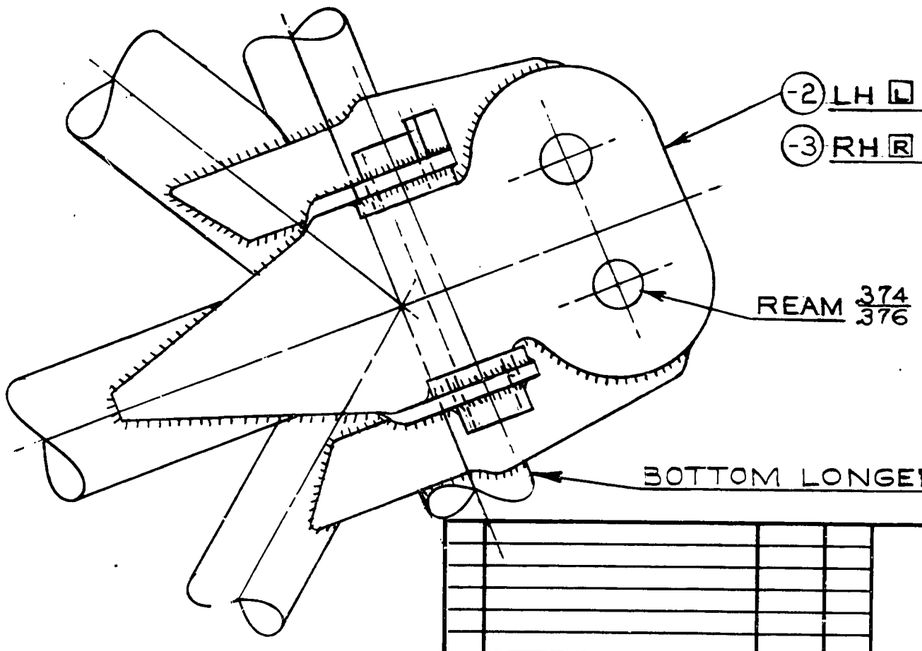

NOTES

PARTS MARKED L USED ON LEFT ASSY.

PARTS MARKED R USED ON RIGHT ASSY.

LEFT INST. SHOWN

PART No.	No. REQ.	NAME / MATERIAL
-3	–	ASSY. OF 20681-2, 20671-1, 80042-14, 2 OF 81342-14, 2 OF 80012-64
-2	–	ASSY. OF 20681-2, 20671, 80042-14, 2 OF 81342-14, 2 OF 80012-64
81342-14	2	WASHER
80012-64	2	BUSHING
20681-2	1	FITTING
20671-1	1	FITTING
20671		FITTING
80042-14	1	PLATE

SCALE FULL SIZE | TOTAL WT.–LBS.

FINISH–PIPER SPECIFICATION #10

MANUFACTURING PRACTICES–PIPER SPECIFICATION #9

FITTING. INSTALLATION-LANDING GEAR & LIFT STRUT

LET.	REVISION	DATE	BY

MODEL	PER PLANE	NEXT ASSEMBLY	SUPERSEDES	SUP. BY

THIS DRAWING IS THE PROPERTY OF THE PIPER AIRCRAFT CORP. AND ITS POSSESSION BY UNAUTHORIZED PERSONS SHALL NOT BE CONSTRUED AS PERMISSION TO REPRODUCE FOR SALE, IN WHOLE OR IN PART, ANY DEVICES SHOWN THEREON.

PIPER AIRCRAFT CORP.
LOCK HAVEN, PENNA.

DRAFTSMAN	CHECKER	STANDARDS
R.T.M. 2-8-49	H.R.K. 2-11-49	

12184

485

A485

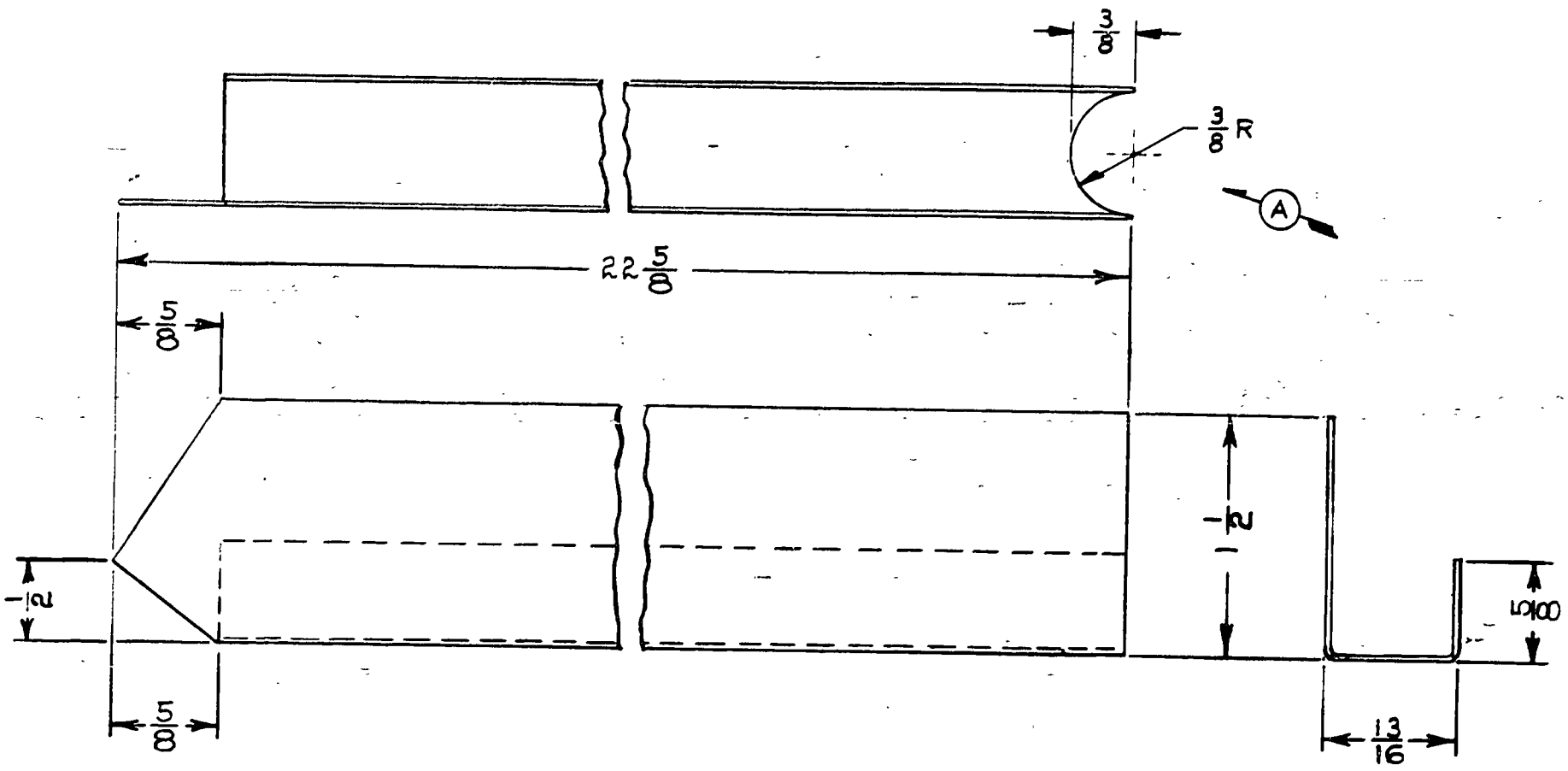

										.032×2 15/16×22 5/8	#1025 STL.
									PART No.	No. REQ.	SIZE / MATERIAL / DESCRIPTION
									SCALE FULL SIZE		TOTAL WT.–LBS.
									FINISH–PIPER SPECIFICATION #10		
									MANUFACTURING PRACTICES–PIPER SPECIFICATION #9		
				MODEL	PER PLANE	NEXT ASSEMBLY	SUPERSEDES	SUP. BY	CHANNEL- FUSELAGE		
A	3/8 DIM. & 3/8 R ADDED	5-15-50	C.K.	THIS DRAWING IS THE PROPERTY OF THE PIPER AIRCRAFT CORP. AND ITS POSSESSION BY UNAUTHORIZED PERSONS SHALL NOT BE CONSTRUED AS PERMISSION TO REPRODUCE FOR SALE, IN WHOLE OR IN PART. ANY DEVICES SHOWN THEREON.					R.T.M.	H.R.K.	
LET.	REVISION	DATE	DY	PIPER AIRCRAFT CORP. LOCK HAVEN, PENNA.					2-3-49	2-14-49	12200
									DRAFTSMAN	CHECKER	STANDARDS

97

A 97

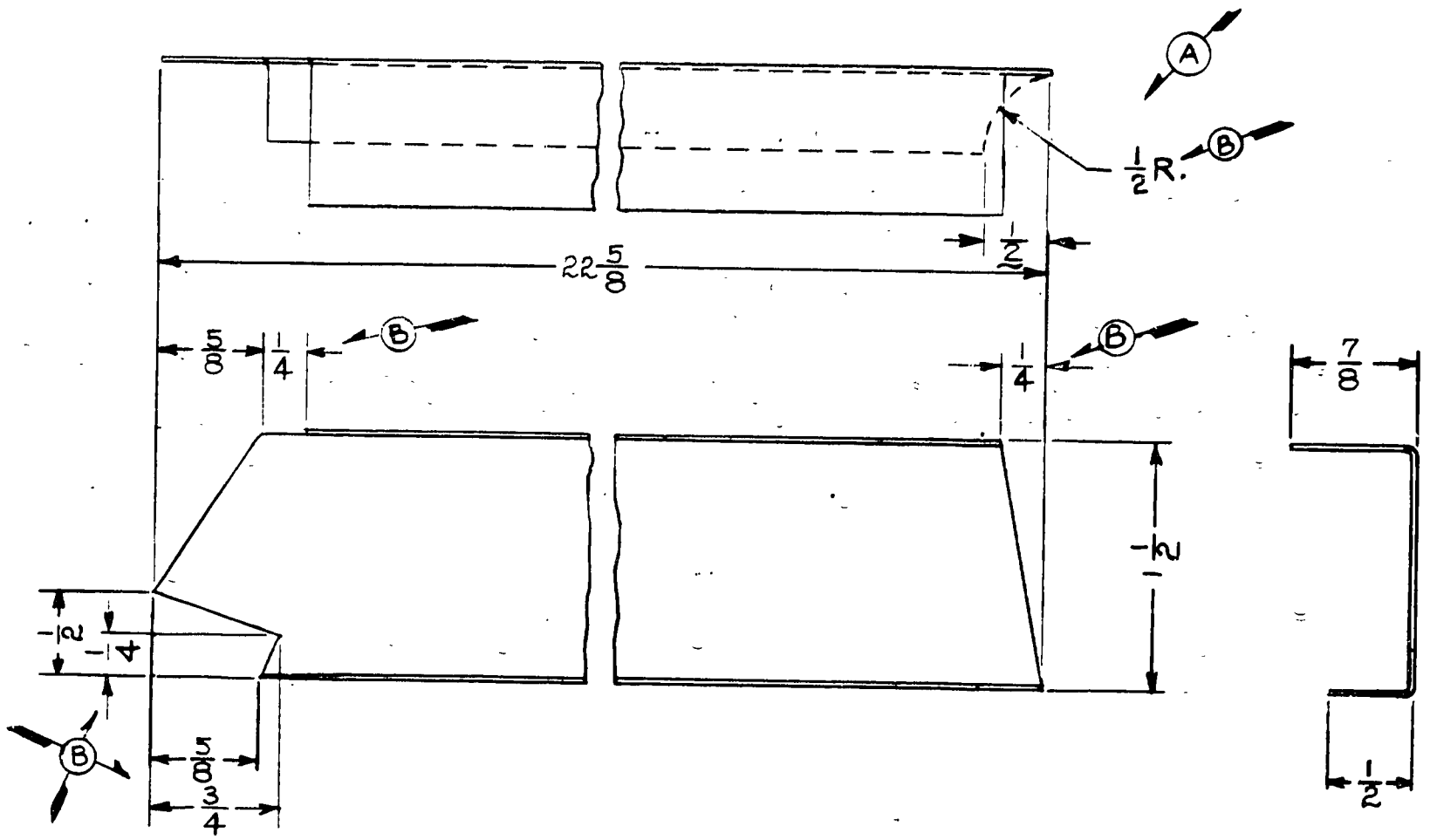
A
½R.
B
½
22 5/8
5/8
1/4
B
1/4
B
7/8
-h-
-1/2
-1/4
B
5/8
3/4
1/2

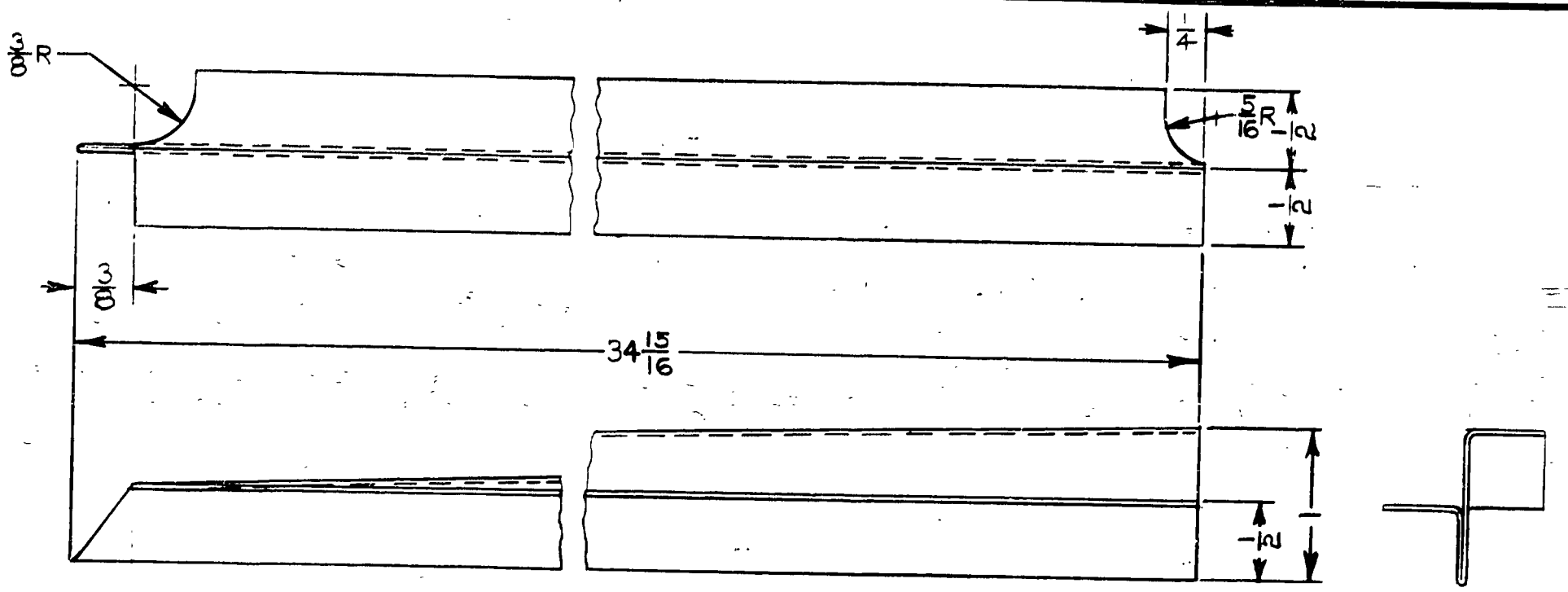

LET.	REVISION	DATE	BY	MODEL	PER PLANE	NEXT ASSEMBLY	SUPERSEDES	SUP. BY	

THIS DRAWING IS THE PROPERTY OF THE PIPER AIRCRAFT CORP. AND ITS POSSESSION BY UNAUTHORIZED PERSONS SHALL NOT BE CONSTRUED AS PERMISSION TO REPRODUCE FOR SALE, IN WHOLE OR IN PART, ANY DEVICES SHOWN THEREON.

PIPER AIRCRAFT CORP.
LOCK HAVEN, PENNA.

PART No.	No. REQ.	SIZE	DESCRIPTION
		0.32 × 2 1/2 × 34 15/16	#1025 STEEL
		MATERIAL	

SCALE FULL SIZE — TOTAL WT.–LBS.

FINISH–PIPER SPECIFICATION #10

MANUFACTURING PRACTICES–PIPER SPECIFICATION #9

CHANNEL-FUSELAGE

DRAFTSMAN	CHECKER	STANDARDS
R.T.M. 2-3-49	H.R.K. 2-14-49	

12203

99

A99

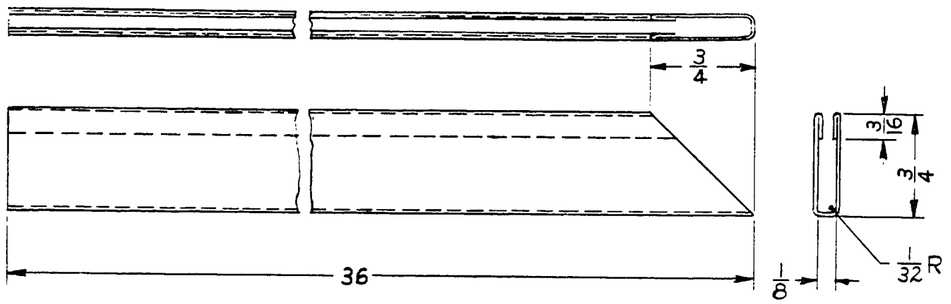

12204-2

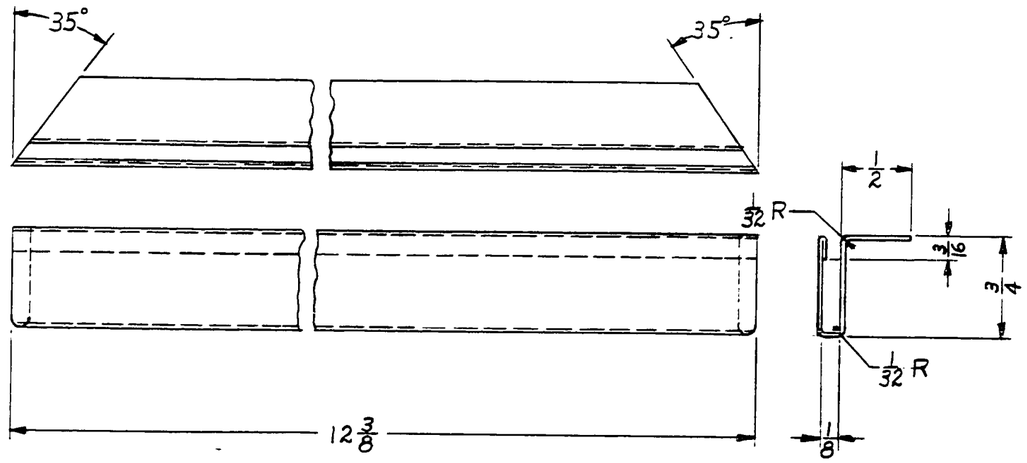

12204-5

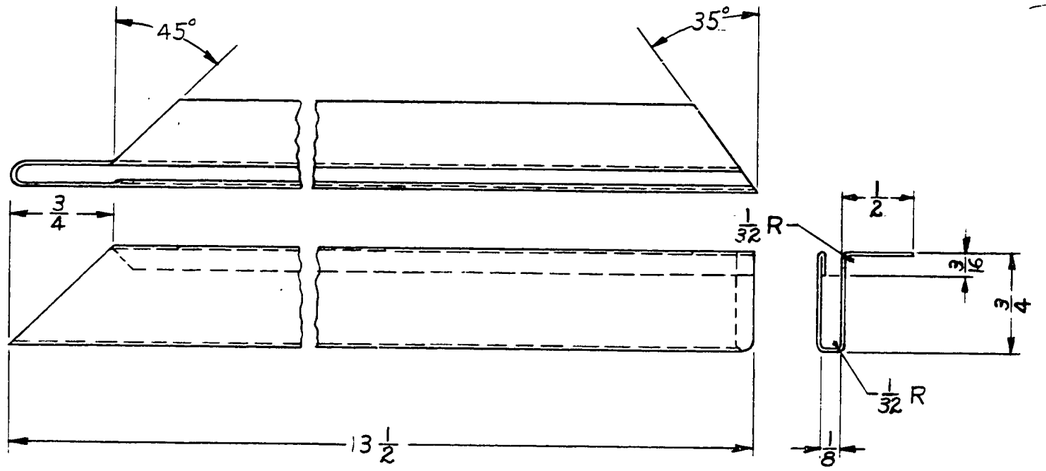

12204-3 L.H. SHOWN
12204-4 R.H. OPPOSITE

LET.	REVISION	DATE	BY

MODEL	PER PLANE	NEXT ASSEMBLY	SUPERSEDES	SUP. BY

THIS DRAWING IS THE PROPERTY OF THE PIPER AIRCRAFT CORP. AND ITS POSSESSION BY UNAUTHORIZED PERSONS SHALL NOT BE CONSTRUED AS PERMISSION TO REPRODUCE FOR SALE, IN WHOLE OR IN PART, ANY DEVICES SHOWN THEREON.

PIPER AIRCRAFT CORP.
LOCK HAVEN, PENNA.

PART NO.	No. REQ.	SIZE	DESCRIPTION
		.020 GAGE	H.R. STEEL
		MATERIAL	

SCALE FULL SIZE — TOTAL WT.—LBS.

FINISH—PIPER SPECIFICATION #10

MANUFACTURING PRACTICES—PIPER SPECIFICATION #9

CHANNEL—WINDOW

DRAFTSMAN	CHECKER	STANDARDS
C. E. K. 3-8-49	H. R. K. 3-9-49	

12204

486

A486

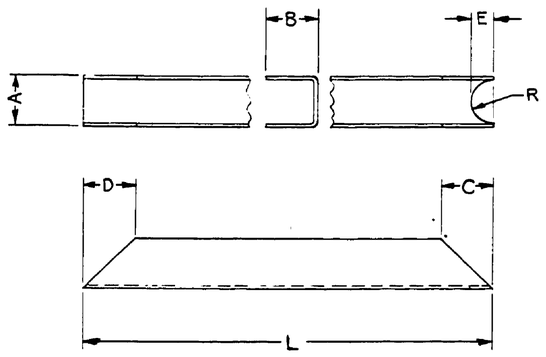

TYPE 1

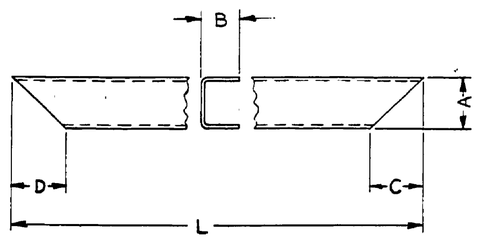

TYPE 2

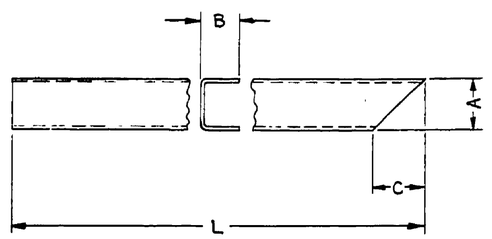

TYPE 3

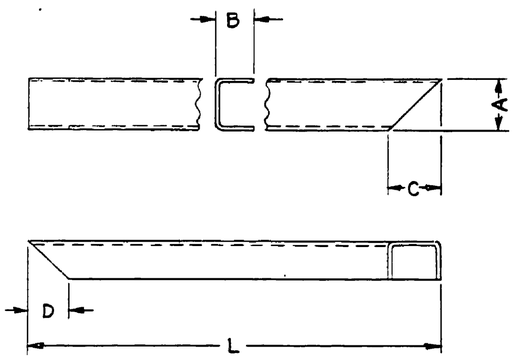

TYPE 4

PART NO.	TYPE	L	A	B	C	D	E	R	MATERIAL
12205-2	1	34 5/8	5/8	9/16	5/16				.032*1025 STL.
12205-3	1	17 1/2	15/16	9/16					.032*1025 STL.
12205-4	1	13 1/2	13/16	9/16					.032*1025 STL.
12205-5	1	18	11/16	9/16			1/4	3/8	.032*1025 STL.
12205-6	1	18	5/8	1/2			1/4	3/8	.032*1025 STL.
12205-7	1	19 3/8	11/16	5/8					.020 H.R. STL.
12205-8	1	8 1/4	3/8	1/2					.020 H.R. STL.
12205-9	1	36	1 1/4	1/2					.045*1025 STL.
12205-10	1	3	5/16	3/8					.020 3S-1/2H.ALUM.
12205-11	1	4 5/8	1/2	3/8					.032 *1025 STL.
12205-12	3	17 3/16	1/2	3/8	13/16				.032 *1025 STL.
12205-13	4	8 1/8	1/2	3/8	13/16	3/8			.032 *1025 STL.
12205-14	1	1	13/16	5/8					.032 52S-1/2H.ALUM.
12205-15	3	3/4	1/2	1/2	—				.032# 1025 STL.

LET.	REVISION	DATE	BY
K	-15 ADDED	2-19-51	M.G.
J	5/8 WAS 9/32 "A" DIM. ON -6	8-1-50	K.D.
H	-14 ADDED	7-6-50	C.K.
G	18 WAS 17 3/4 "L" DIM. ON -5 & -6 15/16 WAS 13/16 "A" DIM. ON -3	5-17-50	C.K.
F	REDRAWN & REVISED	4-28-50	C.K.

THIS DRAWING IS THE PROPERTY OF THE PIPER AIRCRAFT CORP. AND ITS POSSESSION BY UNAUTHORIZED PERSONS SHALL NOT BE CONSTRUED AS PERMISSION TO REPRODUCE FOR SALE, IN WHOLE OR IN PART, ANY DEVICES SHOWN THEREON

MODEL	PER PLANE	NEXT ASSEMBLY	SUPERSEDES	SUP. BY

PIPER AIRCRAFT CORP.
LOCK HAVEN, PENNA.

PART No. | NO. REQ. | MATERIAL
SCALE | TOTAL WT.-LBS.
FINISH-PIPER SPECIFICATION #10
MANUFACTURING PRACTICES-PIPER SPECIFICATION #9

CHANNEL-"U"

DRAFTSMAN	CHECKER	STANDARDS
C. E. K. 4-28-50	K.R.K. 4-28-50	

12205

729

A729

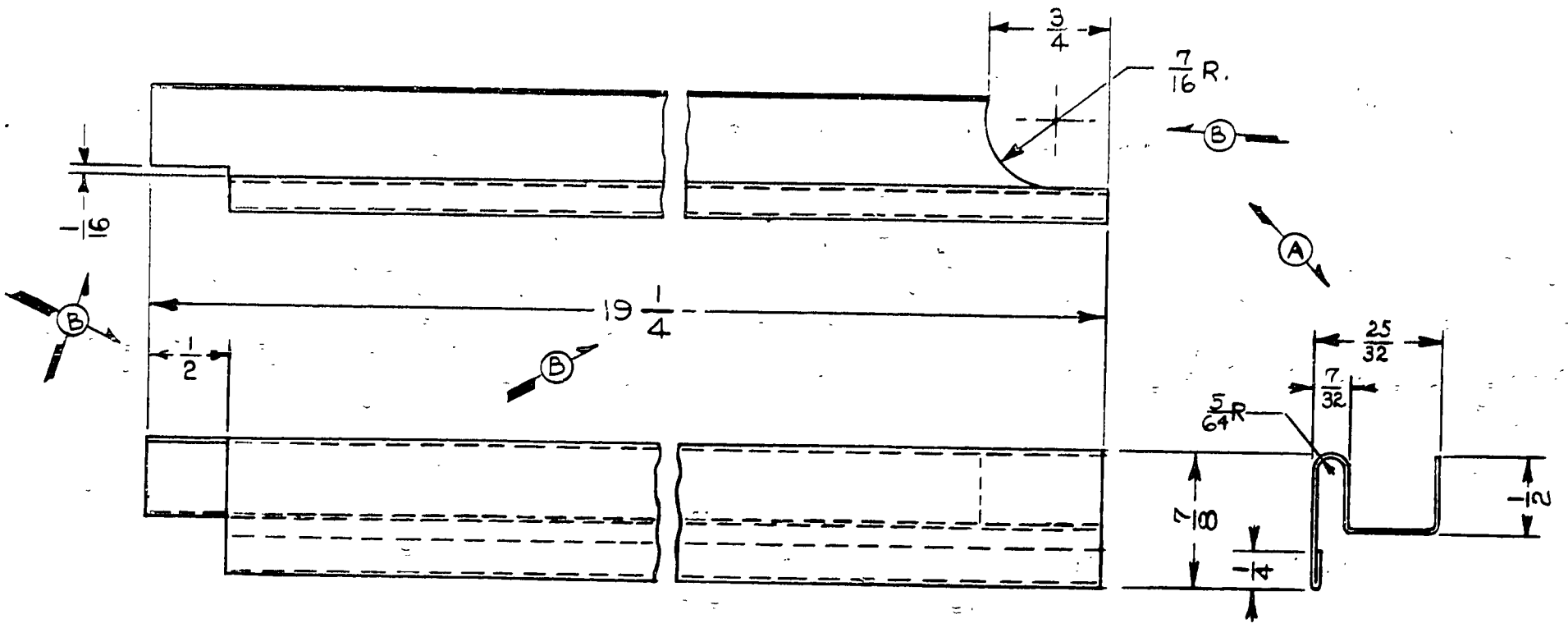

LET.	REVISION	DATE	BY
B	19 1/4 WAS 19 3/8; 1/2 WAS 5/8; 1/16 DIM. ADDED; ENDS REVISED	2-28-50	J.M.M.
A	25/32 WAS 13/16	12-13-49	K.D.

MODEL	PER PLANE	NEXT ASSEMBLY	SUPERSEDES	SUP. BY

THIS DRAWING IS THE PROPERTY OF THE PIPER AIRCRAFT CORP. AND ITS POSSESSION BY UNAUTHORIZED PERSONS SHALL NOT BE CONSTRUED AS PERMISSION TO REPRODUCE FOR SALE, IN WHOLE OR IN PART. ANY DEVICES SHOWN THEREON.

PIPER AIRCRAFT CORP.
LOCK HAVEN, PENNA.

PART No.	No. REQ.	SIZE	DESCRIPTION
		.032 x 2 5/16 x 19 1/4	#1025 STEEL
		MATERIAL	

SCALE FULL SIZE — TOTAL WT.—LBS.

FINISH—PIPER SPECIFICATION #10

MANUFACTURING PRACTICES—PIPER SPECIFICATION #9

CHANNEL—FUSELAGE

DRAFTSMAN	CHECKER	STANDARDS
R.T.M. 2-3-49	H.R.K. 2-14-49	

12206

100

A100

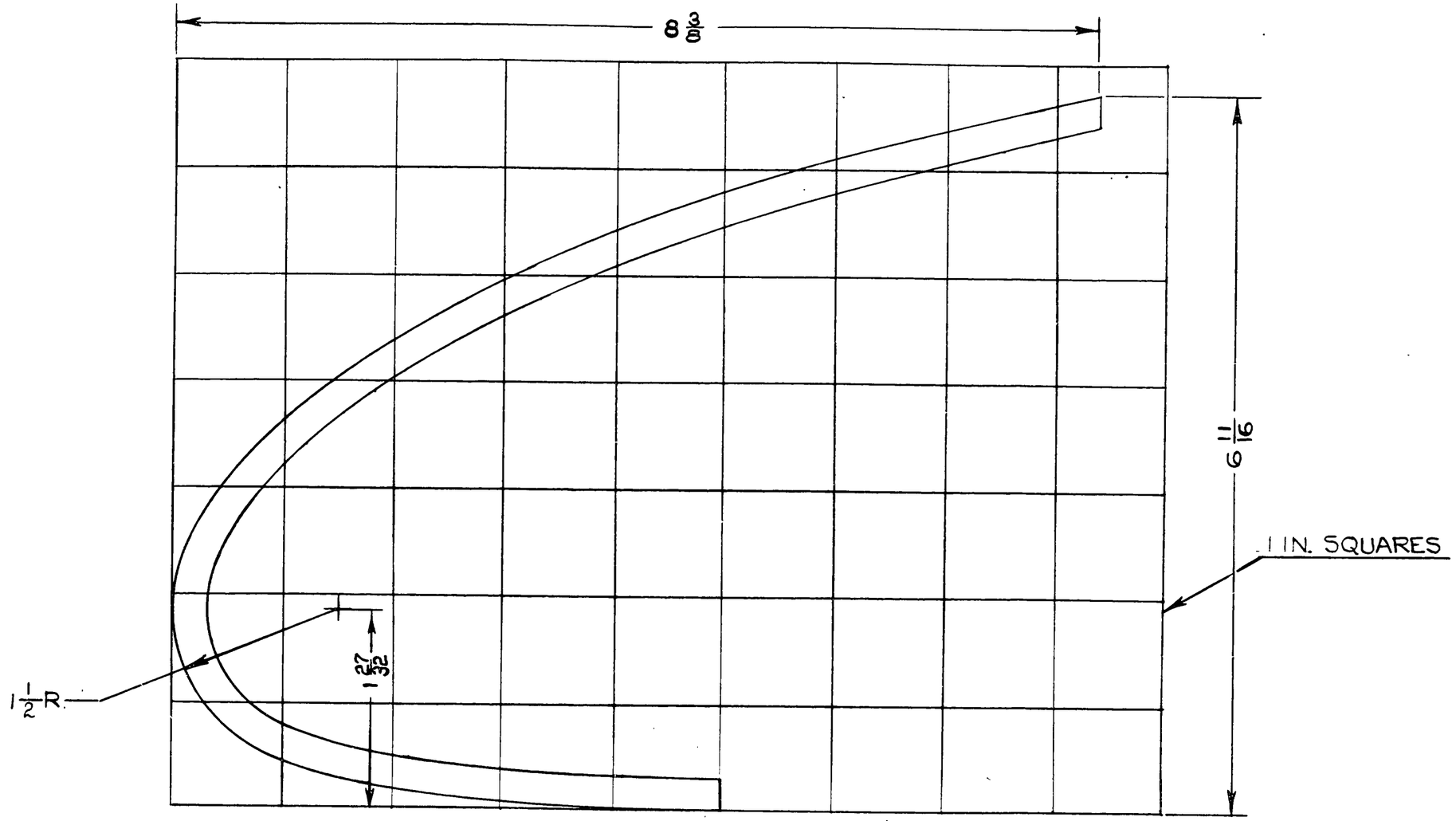

LET.	REVISION	DATE	BY	MODEL	PER PLANE	NEXT ASSEMBLY	SUPERSEDES	SUP. BY	

THIS DRAWING IS THE PROPERTY OF THE PIPER AIRCRAFT CORP. AND ITS POSSESSION BY UNAUTHORIZED PERSONS SHALL NOT BE CONSTRUED AS PERMISSION TO REPRODUCE FOR SALE, IN WHOLE OR IN PART, ANY DEVICES SHOWN THEREON.

PIPER AIRCRAFT CORP.
LOCK HAVEN, PENNA.

		5/16 x.028 x 17L	FT025 STL. TUBE
PART No.	No. REQ.	SIZE	DESCRIPTION
		MATERIAL	
SCALE FULL SIZE		TOTAL WT.–LBS.	
FINISH–PIPER SPECIFICATION #10			
MANUFACTURING PRACTICES–PIPER SPECIFICATION #9			

TUBE – TOPDECK FORMER

R.T.M.	H.R.K.		
2-3-49	2-14-49		12207
DRAFTSMAN	CHECKER	STANDARDS	

487

A487

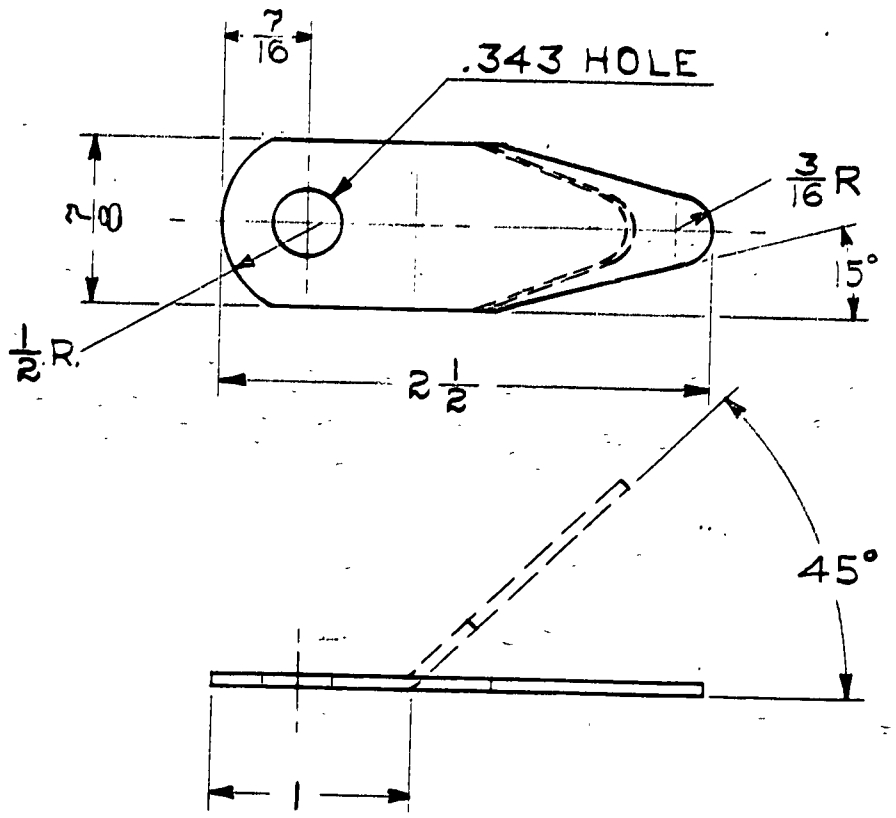

12210 SHOWN

12210-2 AS SHOWN DOTTED

PART No.	No. REQ.	SIZE	DESCRIPTION
		.062 × 7/8 × 2 1/2	#1025 STEEL
		MATERIAL	

SCALE FULL SIZE — TOTAL WT.—LBS.

FINISH—PIPER SPECIFICATION #10

MANUFACTURING PRACTICES—PIPER SPECIFICATION #9

LET.	REVISION	DATE	BY

MODEL	PER PLANE	NEXT ASSEMBLY	SUPERSEDES	SUP. BY

THIS DRAWING IS THE PROPERTY OF THE PIPER AIRCRAFT CORP. AND ITS POSSESSION BY UNAUTHORIZED PERSONS SHALL NOT BE CONSTRUED AS PERMISSION TO REPRODUCE FOR SALE, IN WHOLE OR IN PART, ANY DEVICES SHOWN THEREON.

PIPER AIRCRAFT CORP.
LOCK HAVEN, PENNA.

PLATE - REINFORCEMENT

DRAFTSMAN	CHECKER	STANDARDS
H.R.K. 2-8-49	J.C.B. 2-22-49	

12210

A101

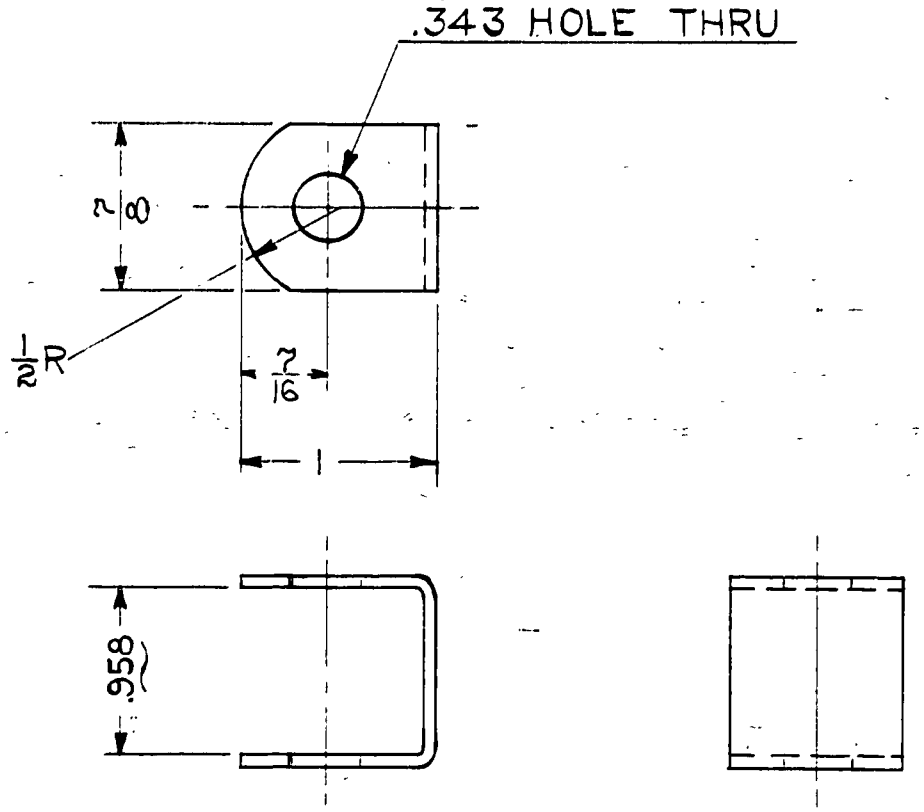

								.062 × 7/8 × 2 15/16	#1025 STEEL
								SIZE	DESCRIPTION
							PART No.	No. REQ.	MATERIAL
							SCALE FULL SIZE		TOTAL WT.—LBS.
							FINISH—PIPER SPECIFICATION #10		
							MANUFACTURING PRACTICES—PIPER SPECIFICATION #9		
				MODEL	PER PLANE	NEXT ASSEMBLY	SUPERSEDES	SUP. BY	PLATE—"U"
LET.	REVISION	DATE	BY	THIS DRAWING IS THE PROPERTY OF THE PIPER AIRCRAFT CORP. AND ITS POSSESSION BY UNAUTHORIZED PERSONS SHALL NOT BE CONSTRUED AS PERMISSION TO REPRODUCE FOR SALE, IN WHOLE OR IN PART. ANY DEVICES SHOWN THEREON.							
				PIPER AIRCRAFT CORP. LOCK HAVEN, PENNA.					H.R.K. 2-8-49 DRAFTSMAN	J.C.B. 2-22-49 CHECKER	STANDARDS

12211

102

A 102

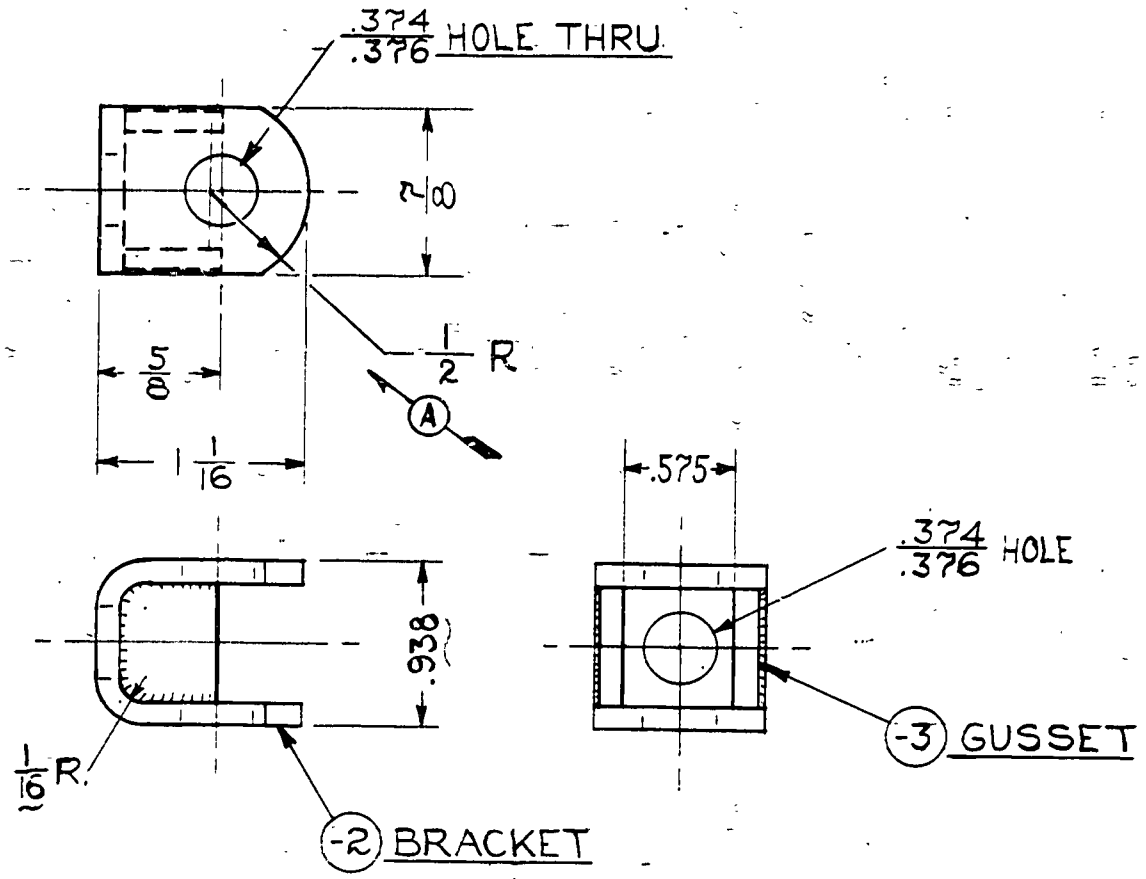

PART No.	No. REQ.	SIZE	DESCRIPTION / MATERIAL
-3	2	.125×1/2×11/16	#1025 STEEL
-2	1	.125×7/8×2 7/8	#1025 STEEL

SCALE FULL SIZE — TOTAL WT.–LBS.

FINISH–PIPER SPECIFICATION #10

MANUFACTURING PRACTICES–PIPER SPECIFICATION #9

BRACKET ASSEMBLY– ENGINE MOUNT ATTACHMENT

MODEL	PER PLANE	NEXT ASSEMBLY	SUPERSEDES	SUP. BY

THIS DRAWING IS THE PROPERTY OF THE PIPER AIRCRAFT CORP. AND ITS POSSESSION BY UNAUTHORIZED PERSONS SHALL NOT BE CONSTRUED AS PERMISSION TO REPRODUCE FOR SALE, IN WHOLE OR IN PART, ANY DEVICES SHOWN THEREON.

LET.	REVISION	DATE	BY
A	1/2R WAS 7/16 R	11-22-49	K.D.

PIPER AIRCRAFT CORP.
LOCK HAVEN, PENNA.

DRAFTSMAN	CHECKER	STANDARDS
H.R.K. 2-8-49	J.C.B. 2-22-49	

12213

103

A 103

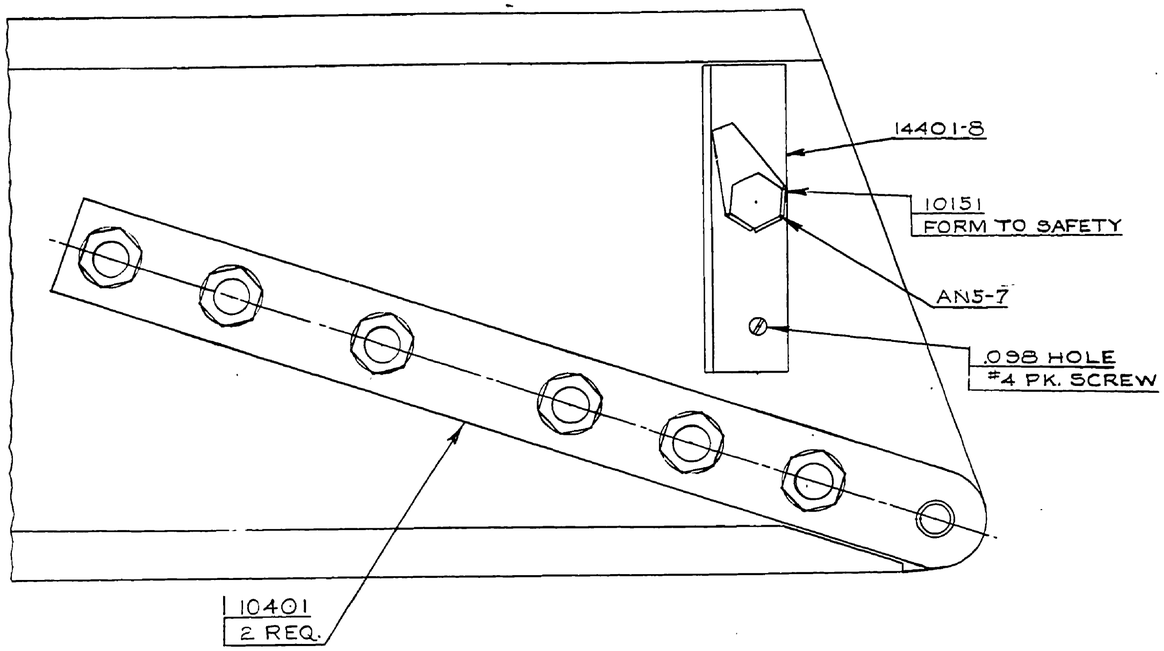

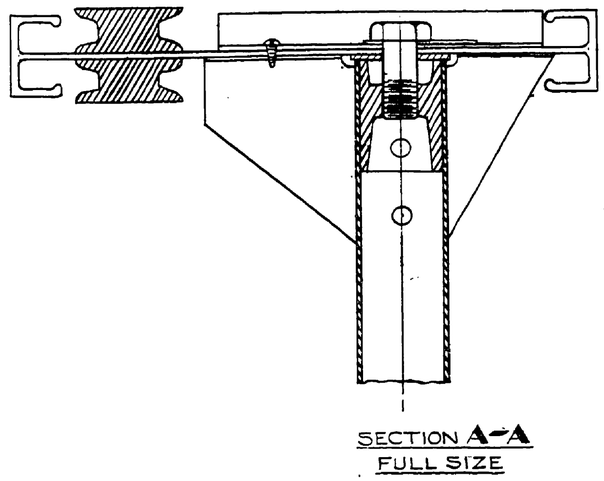

SECTION A-A
FULL SIZE

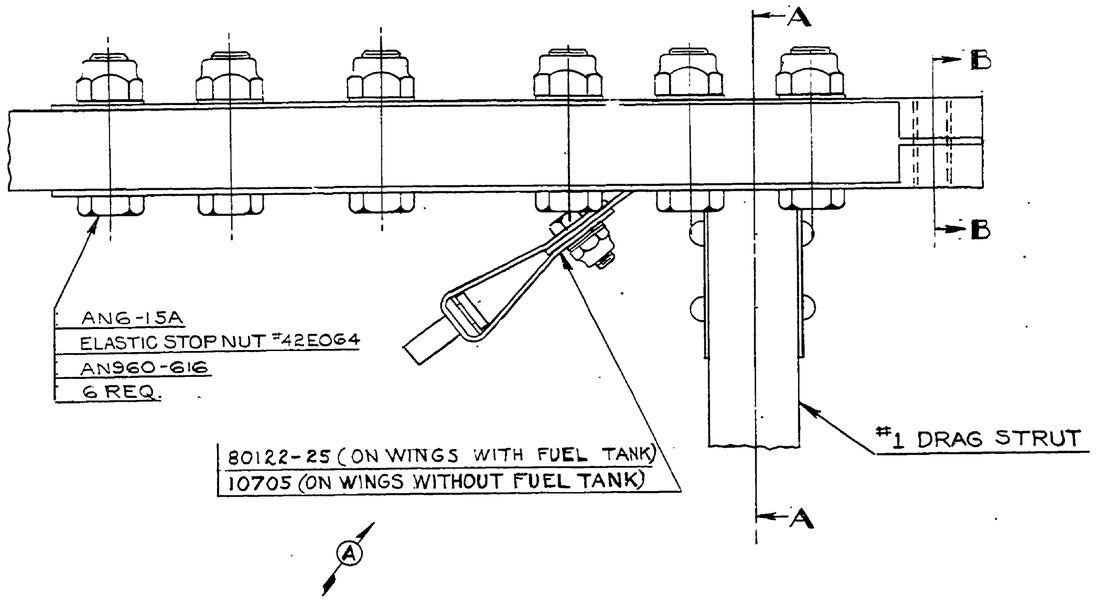

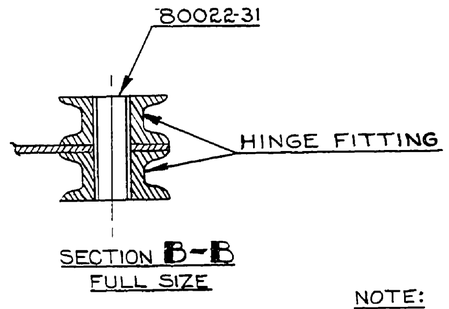

SECTION B-B
FULL SIZE

NOTE:
LEFT INSTALLATION SHOWN

PART NO.	NO. REQ.	SIZE / DESCRIPTION / MATERIAL
#4	1	½L TYPE "Z" RD.HD. PARKER SCREW
	6	ELASTIC STOP NUT #42E064
AN960616	6	WASHER
AN6-15A	6	BOLT
AN5-7	1	BOLT
80022-31	1	BUSHING
80122-25	1	WASHER (ON WINGS WITH FUEL TANK)
10705		PULL (ON WINGS WITHOUT FUEL TANK)
10151	1	LOCK PLATE
14401-8	1	ANGLE
10401	2	HINGE FITTING

SCALE FULL SIZE | TOTAL WT.-LBS.
FINISH-PIPER SPECIFICATION #10
MANUFACTURING PRACTICES-PIPER SPECIFICATION #9

THIS DRAWING IS THE PROPERTY OF THE PIPER AIRCRAFT CORP. AND ITS POSSESSION BY UNAUTHORIZED PERSONS SHALL NOT BE CONSTRUED AS PERMISSION TO REPRODUCE FOR SALE, IN WHOLE OR IN PART, ANY DEVICES SHOWN THEREON

LET.	REVISION	DATE	BY
A	NOTE REMOVED: NOTE ADDED	2-28-50	C.K.

MODEL	PER PLANE	NEXT ASSEMBLY	SUPERSEDES	SUP. BY

PIPER AIRCRAFT CORP.
LOCK HAVEN, PENNA.

FITTINGS INSTALLATION-
FRONT SPAR BUTT

DRAFTSMAN	CHECKER	STANDARDS
R.T.M. 2-11-49	H.R.K. 2-15-49	

12224

A730

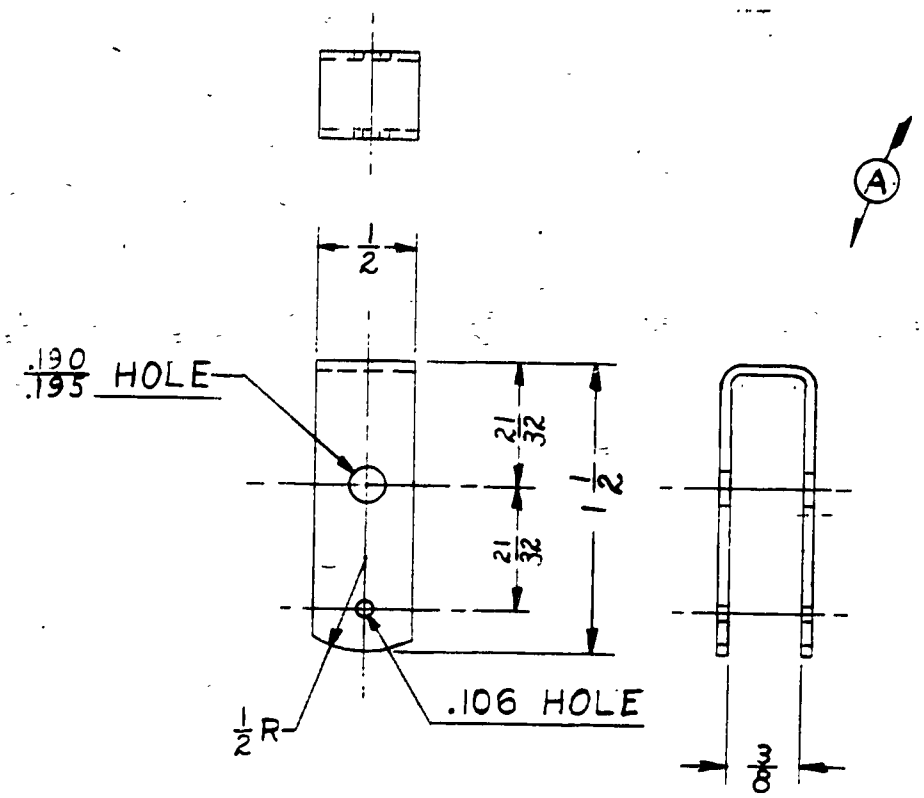
A
1/2
.190
.195 HOLE
21/32
21/32
1 1/2
1/2 R
.106 HOLE
3/8

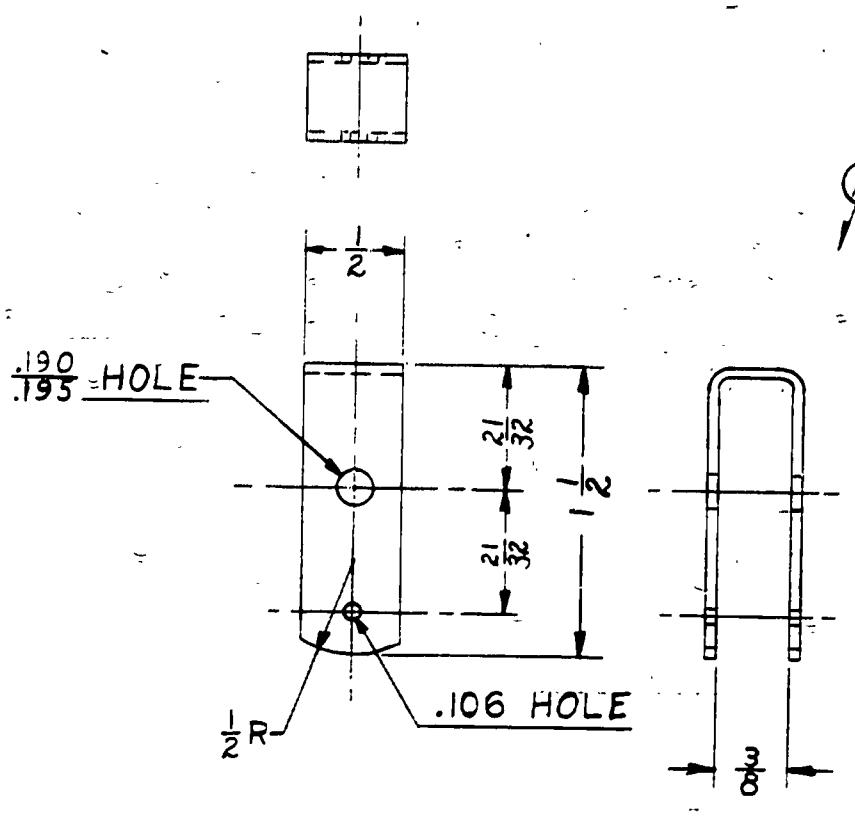
A
1/2
.190
.195 HOLE
21/32
21/32
1 1/2
1/2 R
.106 HOLE
3/8

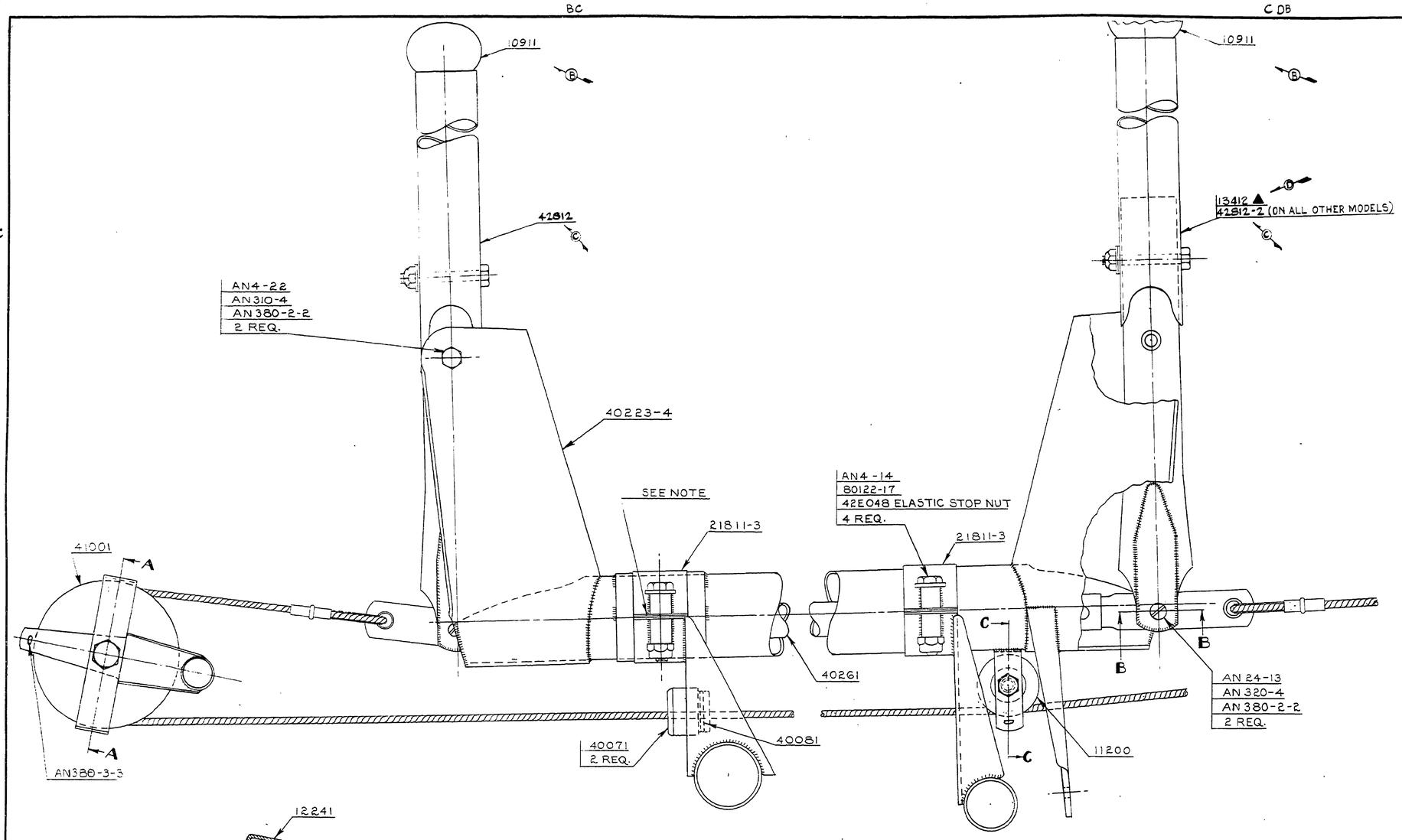

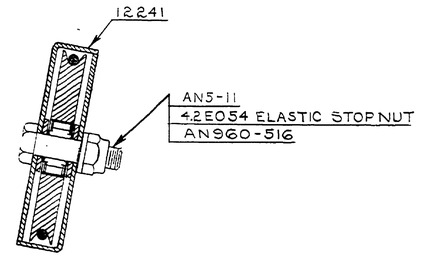

SECTION **A-A**
FULL SIZE

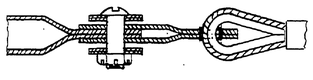

SECTION **B-B**
FULL SIZE

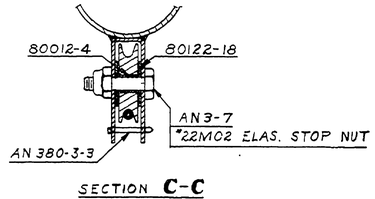

SECTION **C-C**
FULL SIZE

NOTE
1. ENOUGH SHIMS 41371-2, 41371-3, 41371-4, INSERTED FOR PROPER FIT.
2. PARTS MARKED ▲ USED ON MODEL L-21A ONLY.

PART NO.	No. REQ.	NAME
42812	1	STICK ASSEMBLY
	1	ELAS. STOP NUT #22M02
80012-4	1	BUSHING
10911	2	KNOB ASSY
	1	ELASTIC STOP NUT #42E054
	4	ELASTIC STOP NUT 42E048
AN960-516	1	WASHER
AN380-3-3	2	COTTER PIN
AN380-2-2	4	
AN320-4	2	
AN310-4	2	NUT
80122-18	2	WASHER
AN24-13	2	BOLT
AN5-11	1	
AN4-22	2	
AN4-14	4	
AN3-7	1	
80122-17	4	WASHER
21811-3	2	UPPER BEARING ASSY.
41371-4	SEE NOTE	SHIMS
41371-3		
41371-2		
40261	1	CONNECTOR TUBE
40223-4	1	TORQUE TUBE ASSY.
41001	1	PULLEY
40081	1	SNAP RING
40071	2	FAIRLEAD SEGMENT
12241	2	GUARD
▲ 13412	1	STICK ASSY. ON ALL OTHER MODELS
42812-2		
11200	1	PULLEY

LET.	REVISION	DATE	BY
D	NOTE 2 & 13412 ADDED	5-17-51	I.P.M.
C	42812 WAS 42792 & 12234-2	12-12-50	M.G.
	42812-2 WAS 42792 & 12234-3		
B	10911 WAS 10910	12-1-49	K.D.
A	VIEWS OF PULLEY BRKT. REV.	4-29-49	C.K.

MODEL PER PLANE | NEXT ASSEMBLY | SUPERSEDES | SUP. BY

THIS DRAWING IS THE PROPERTY OF THE PIPER AIRCRAFT CORP. AND ITS POSSESSION BY UNAUTHORIZED PERSONS SHALL NOT BE CONSIDERED AS PERMISSION TO REPRODUCE FOR SALE, IN WHOLE OR IN PART, ANY DEVICES SHOWN THEREON.

PIPER AIRCRAFT CORP.
LOCK HAVEN, PENNA.

SCALE FULL SIZE | TOTAL WT.—LBS.
FINISH—PIPER SPECIFICATION #10
MANUFACTURING PRACTICES—PIPER SPECIFICATION #9

CONTROL INSTALLATION— ELEVATOR + AILERON

DRAFTSMAN	CHECKER	STANDARDS
R.T.M. 2-18-48	H.R.K. 2-27-48	

12237

Philadelphia Blue Print Co. 150 8-1-48

A841

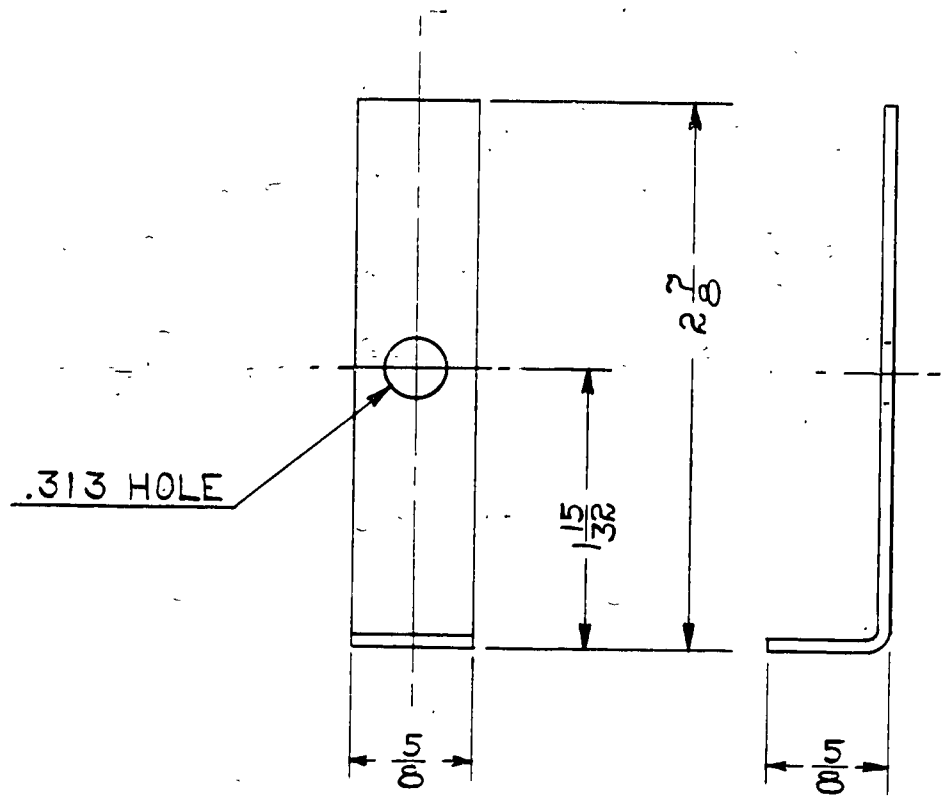

PART No.	No. REQ.	.062 × 5/8 × 3 1/2 SIZE	#1025 STEEL DESCRIPTION
		MATERIAL	

SCALE FULL SIZE | TOTAL WT.–LBS.

FINISH–PIPER SPECIFICATION #10

MANUFACTURING PRACTICES–PIPER SPECIFICATION #9

LET.	REVISION	DATE	BY

MODEL	PER PLANE	NEXT ASSEMBLY	SUPERSEDES	SUP. BY

THIS DRAWING IS THE PROPERTY OF THE PIPER AIRCRAFT CORP. AND ITS POSSESSION BY UNAUTHORIZED PERSONS SHALL NOT BE CONSTRUED AS PERMISSION TO REPRODUCE FOR SALE, IN WHOLE OR IN PART, ANY DEVICES SHOWN THEREON.

PIPER AIRCRAFT CORP.
LOCK HAVEN, PENNA.

GUARD–PULLEY

DRAFTSMAN	CHECKER	STANDARDS	
H.R.K. 2-17-49	J.C.B. 3-10-49		12241

105

A105

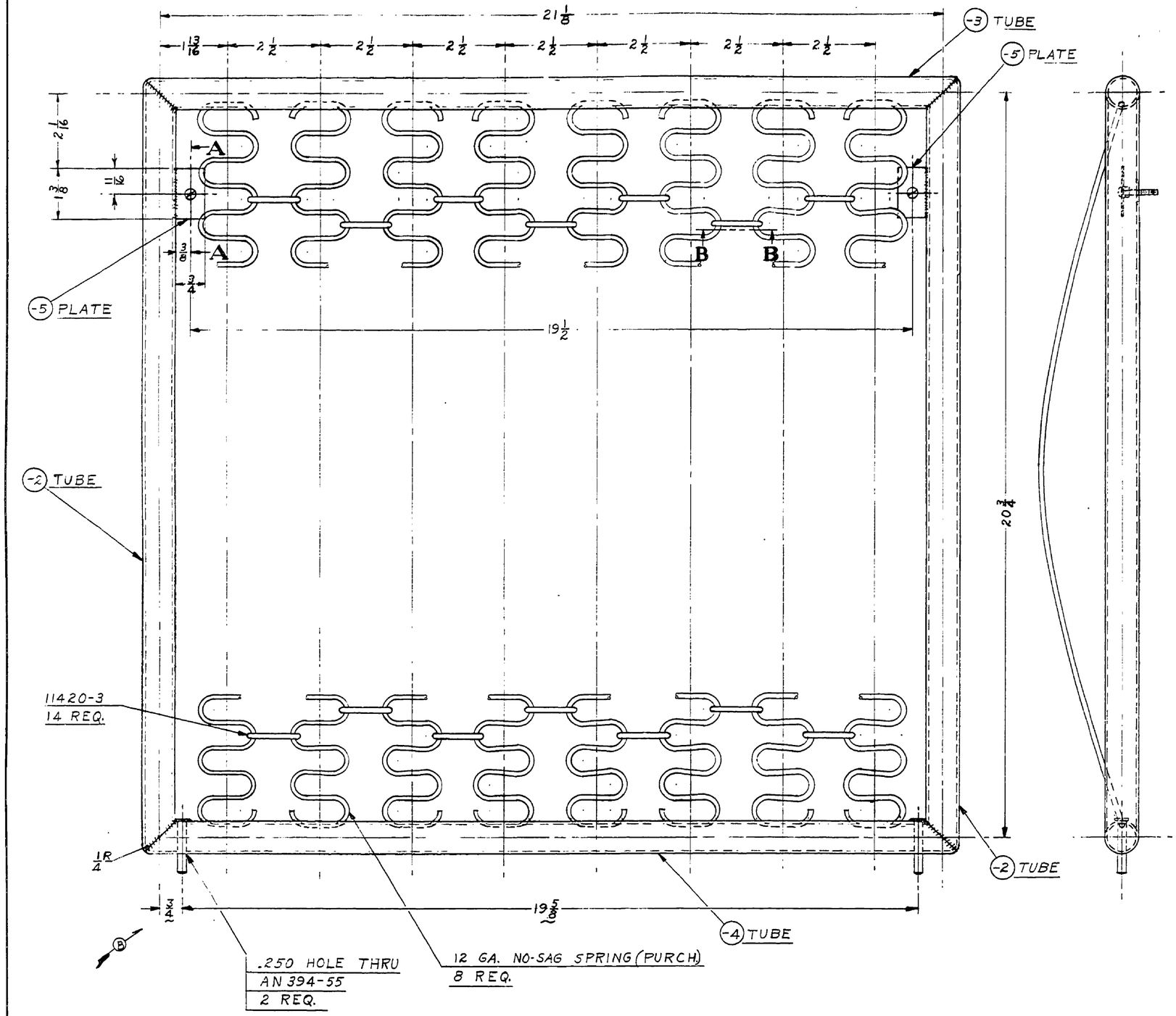

BEND ENDS AS SHOWN

SEC. **B-B**
FULL SIZE

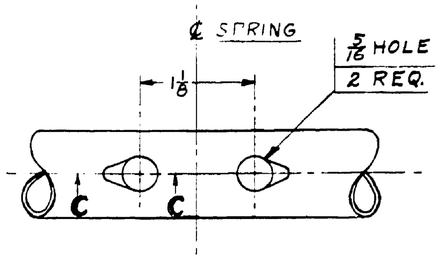

FIG. 1
TYPICAL HOLES FOR SPRING INST.
FULL SIZE

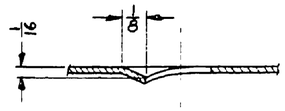

SEC. **C-C**
TWICE SIZE

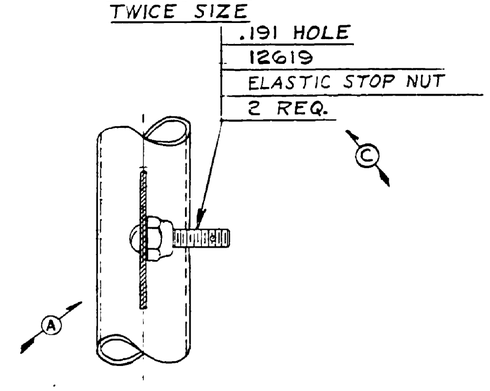

SEC. **A-A**
FULL SIZE

	8	12 GA. × 15 1/2 L	NO-SAG SPRING PURCH. KAY MFG. CO.
	2	ELASTIC STOP NUT #22M02	
AN394-55	2	PIN	
12619	2	SCREW	
11420-3	14	LINK	
-5	2	.062 × 3/4 × 1 3/8	#1025 STL.
-4	1	7/8 × .035 × 22	#1025 STL. TUBE
-3	1	7/8 × .035 × 22	#1025 STL. TUBE
-2	2	7/8 × .035 × 21 5/8	#1025 STL. TUBE
PART No.	NO. REQ.	SIZE	DESCRIPTION
		MATERIAL	

SCALE 6 IN = 1 FT. & NOTED — TOTAL WT.—LBS.
FINISH—PIPER SPECIFICATION #10
MANUFACTURING PRACTICES—PIPER SPECIFICATION #9

THIS DRAWING IS THE PROPERTY OF THE PIPER AIRCRAFT CORP. AND ITS POSSESSION BY UNAUTHORIZED PERSONS SHALL NOT BE CONSTRUED AS PERMISSION TO REPRODUCE FOR SALE, IN WHOLE OR IN PART, ANY DEVICES SHOWN THEREON

LET.	REVISION	DATE	BY
C	83481 ℄ ATTACH. REMOVED 12619 ℄ ATTACH. ADDED	9-26-49	R.R.
B	3/4 WAS 5/8	6-27-49	H.R.K.
A	MACH. SCREWS REVERSED	3-28-49	HRK

MODEL | PER PLANE | NEXT ASSEMBLY | SUPERSEDES | SUP. BY

PIPER AIRCRAFT CORP.
LOCK HAVEN, PENNA.

BACK ASSY.— REAR SEAT

C.E.K.	H.R.K.		
2-22-49	2-23-49		
DRAFTSMAN	CHECKER	STANDARDS	**12244**

A731

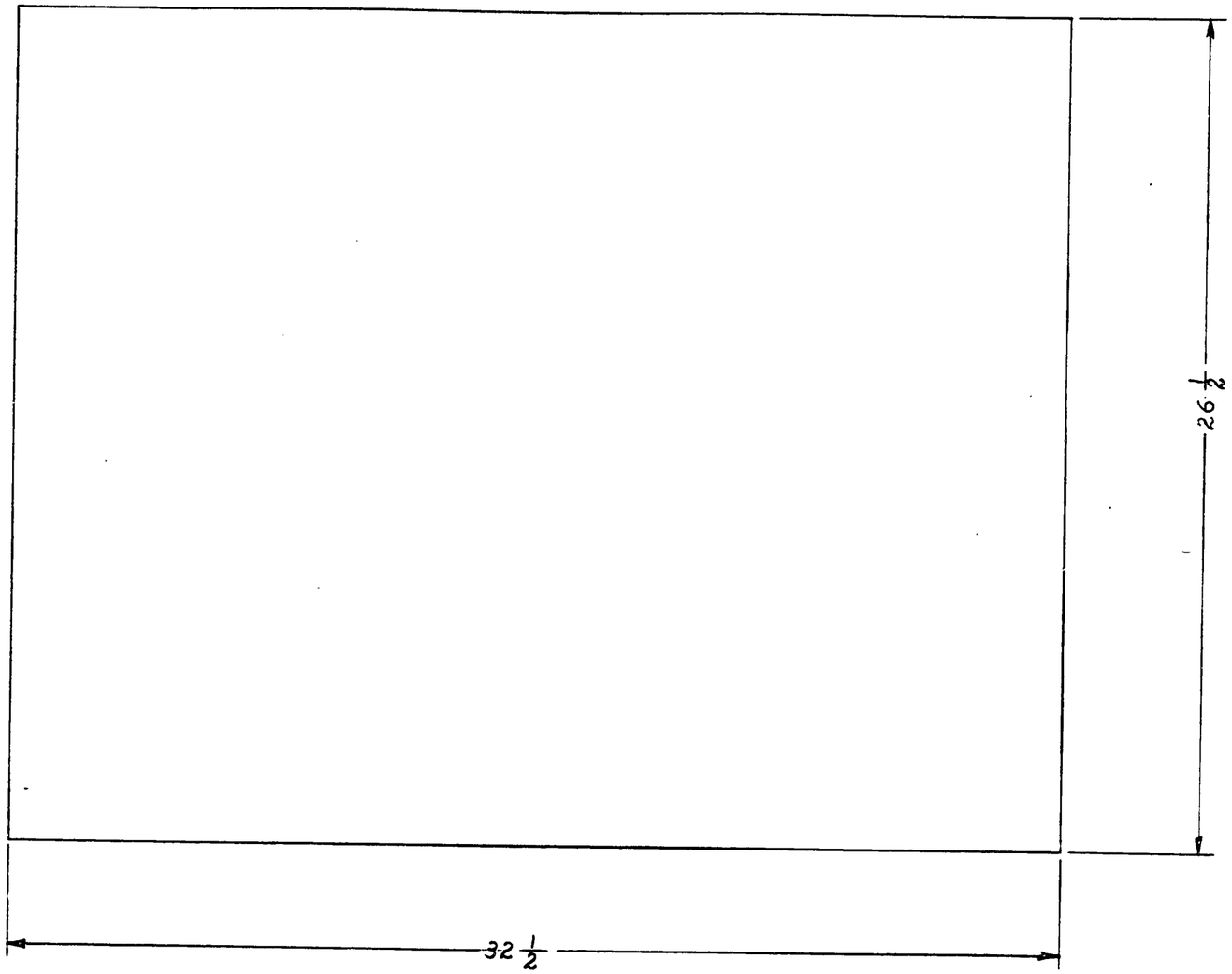

								.100	×26½×32½	PLEXIGLAS
								SIZE		DESCRIPTION
							PART No.	No. REQ.		MATERIAL
							SCALE 3 IN. = 1 FT.			TOTAL WT.—LBS.
							FINISH—PIPER SPECIFICATION #10			
							MANUFACTURING PRACTICES—PIPER SPECIFICATION #9			
							WINDOW—TOPDECK FRONT			
LET.	REVISION	DATE	BY	MODEL	PER PLANE	NEXT ASSEMBLY	SUPERSEDES	SUP. BY		

THIS DRAWING IS THE PROPERTY OF THE PIPER AIRCRAFT CORP. AND ITS POSSESSION BY UNAUTHORIZED PERSONS SHALL NOT BE CONSTRUED AS PERMISSION TO REPRODUCE FOR SALE, IN WHOLE OR IN PART, ANY DEVICES SHOWN THEREON.

PIPER AIRCRAFT CORP.
LOCK HAVEN, PENNA.

DRAFTSMAN	CHECKER	STANDARDS	
C.E.K. 2-28-49	H.R.K. 3-2-49		12249

488

A488

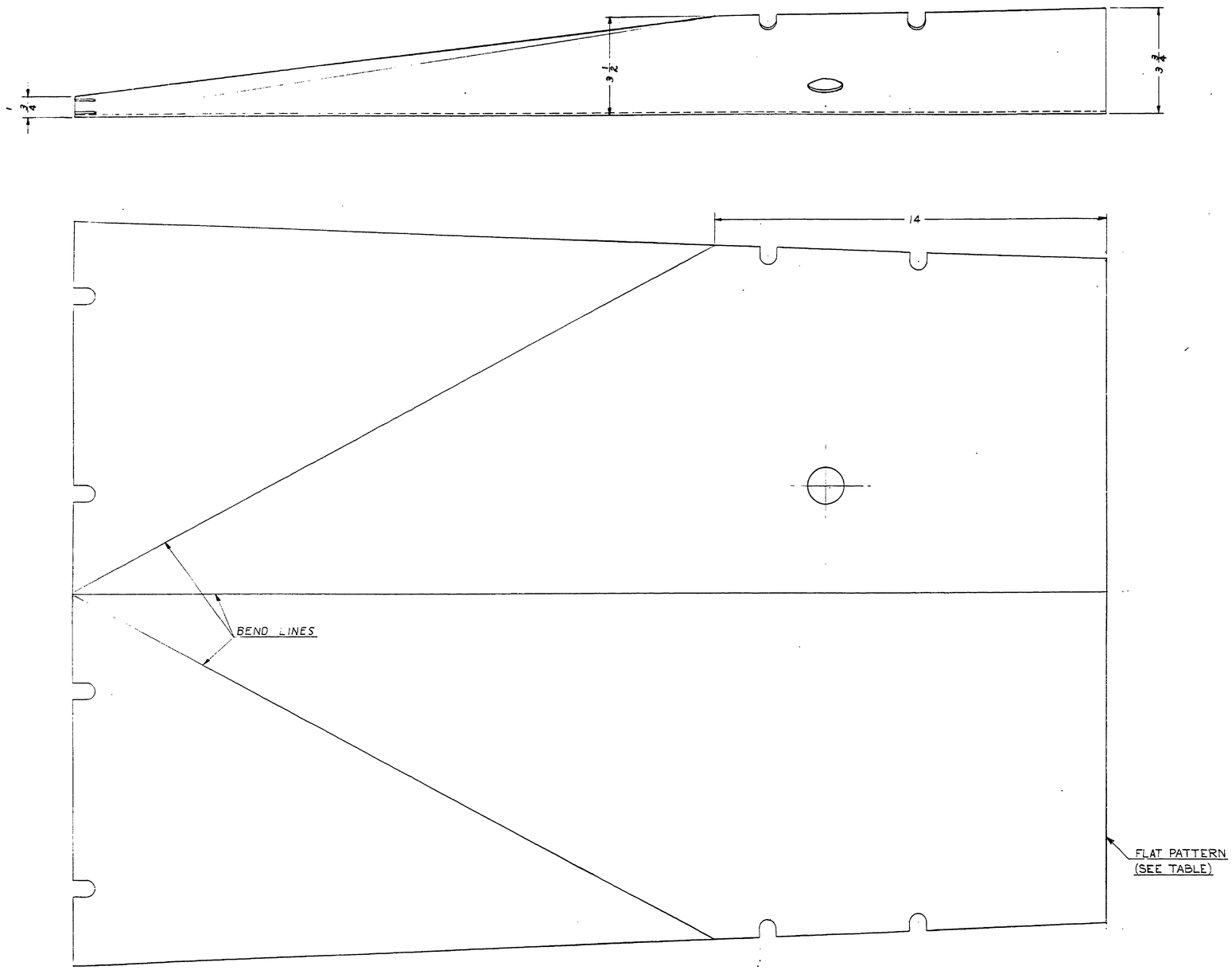

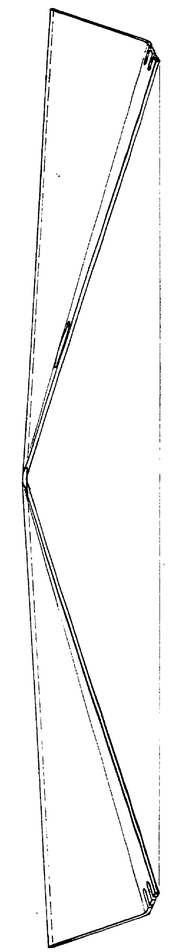

PART NO.	FLAT PATTERN
12250	12399
12250-2	12399-2
12250-3	12399-3
12250-4	12399-4

LET.	REVISION	DATE	BY
C	- 4 ADDED	4-3-51	I.M.M.
B	- 3 ADDED	8-28-50	C.K.
A	-2, 12399 & 12399-2 ADDED; 37, 26½ & 23½ DIM. REM'D.	5-31-50	C.K.

MODEL | PER PLANE | NEXT ASSEMBLY | SUPERSEDES | SUP. BY

THIS DRAWING IS THE PROPERTY OF THE PIPER AIRCRAFT CORP. AND ITS POSSESSION BY UNAUTHORIZED PERSONS SHALL NOT BE CONSTRUED AS PERMISSION TO REPRODUCE FOR SALE, IN WHOLE OR IN PART, ANY DEVICES SHOWN THEREON.

PIPER AIRCRAFT CORP.
LOCK HAVEN, PENNA.

PART No.	No. REQ.	MATERIAL
SEE TABLE	-	FLAT PATTERN
		.100 × 26½ × 37¾ PLEXIGLAS
		SIZE DESCRIPTION

SCALE 6 IN. = 1 FT. TOTAL WT.—LBS.
FINISH—PIPER SPECIFICATION #10
MANUFACTURING PRACTICES—PIPER SPECIFICATION #9

WINDOW-TOPDECK REAR

DRAFTSMAN	CHECKER	STANDARDS
C.E.K. 2-28-49	H.R.K. 3-3-49	

12250

842

Philadelphia Blue Print Co. 150 8-1-46

A842

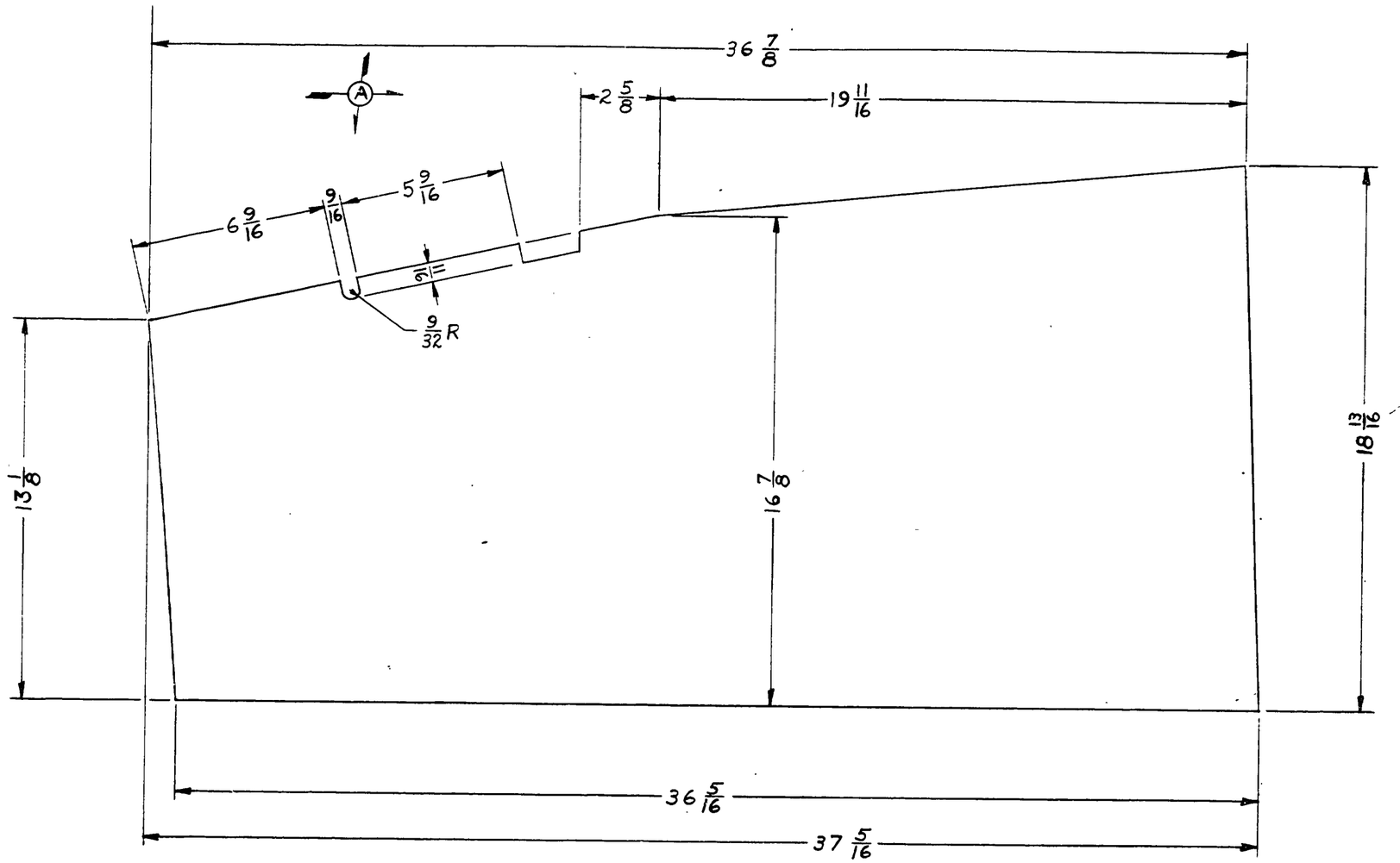

										.080 x 18 13/16 x 37 5/16	PLEXIGLAS
									PART NO.	No. REQ.	SIZE / DESCRIPTION MATERIAL
									SCALE 3 IN. = 1 FT		TOTAL WT.–LBS.
									FINISH–PIPER SPECIFICATION #10		
									MANUFACTURING PRACTICES–PIPER SPECIFICATION #9		
									WINDOW–ENCLOSURE REAR		
A	DIMS. & CUTOUTS REVISED	5-27-49	C.K.		MODEL	PER PLANE	NEXT ASSEMBLY	SUPERSEDES	SUP. BY		
LET.	REVISION	DATE	BY								

THIS DRAWING IS THE PROPERTY OF THE PIPER AIRCRAFT CORP. AND ITS POSSESSION BY UNAUTHORIZED PERSONS SHALL NOT BE CONSTRUED AS PERMISSION TO REPRODUCE FOR SALE, IN WHOLE OR IN PART, ANY DEVICES SHOWN THEREON.

PIPER AIRCRAFT CORP.
LOCK HAVEN, PENNA.

DRAFTSMAN	CHECKER	STANDARDS	
C.E.K. 2-28-49	H.R.K. 3-2-49		12251

489

A489

WAS D1145-B

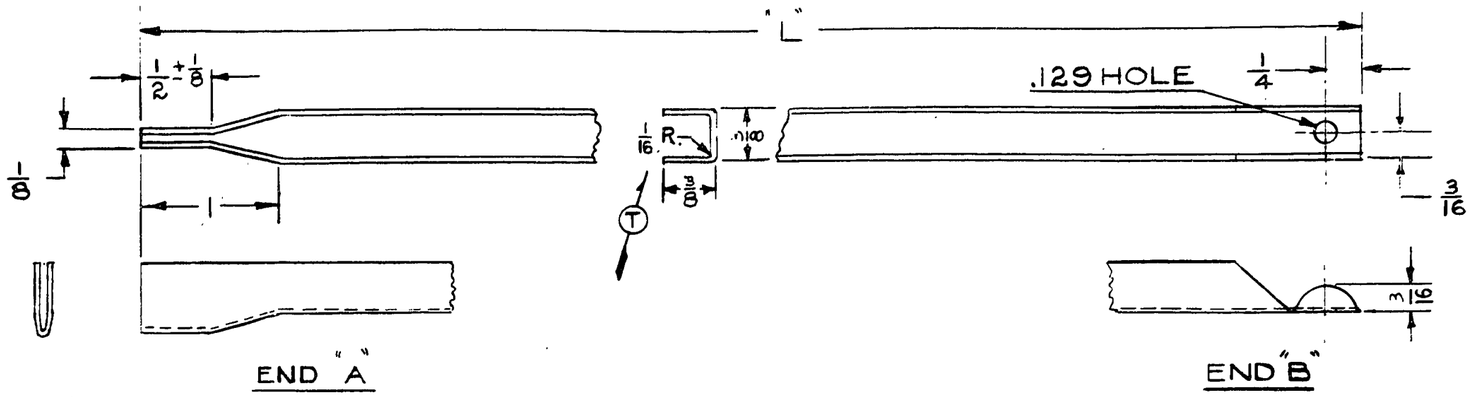

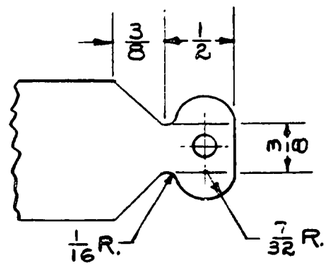

FLAT PATTERN OF END "B"

	PART NO.	L LENGTH	OLD PART NO.	TYPE END		MODEL	PER PLANE	NEXT ASSEMBLY
S	12252-2	8 1/2	192	END B	END B	J3, L-4A J5C	12 10	13004, 13556 14766
S	12252-3	16	190	END B	END B	L-14 J3, L-4A J5C	6 14 14	30405, 30404 13004, 13556 14766
S	12252-4	17	193	END B	END B	L-14 J3, L-4A J5C	10 8 8	30405, 30404 13004, 13556 14766
	12252-5	11	1031	END B	END B	L-14 J3, L-4A J5C	4 2 2	30405, 30404 13004, 13556 16255
S	12252-6	6 1/4	1126	END B	END B	J5C L-14	4 4	14766 30405, 30404
	12252-7	7 3/4	1127	END B	END B	J5C L-14 J3, L-4A J5C	2 8 8 4	14766 30405, 30404 13004, 13556 14766
S	12252-8	13 3/4	189	END A	END B	J5C	2	14766
	12252-9	10 1/2	1124	END A	END B			
	12252-10	8 1/2	1125	END A	END B			
	12252-11	8 7/8		END B	SQ. END			
	12252-12	10 3/4		END B	SQ. END			

LET.	REVISION	DATE	BY
W	-11, -12 ADDED	8-10-49	R.M.
V	10 PER PLANE WAS 12 ON -2 FOR J5C	8-20-46	I. DB
U	J3 PER PLANE 5 WAS 4 FOR -4	F-31-46	BC
T	1/16 R WAS 1/32 R	12-28-45	E.L.N.
S	J5C N.A. 16355 REM. FOR -2-3-4-6-8	11-29-45	D.A.W.
R	J5C MODEL REF. CANC. FOR -5	11-29-45	D.A.W.
Q	REDRAWN & REVISED	3-19-45	I.D.B.

NOTED MODEL	NOTED PER PLANE	NOTED NEXT ASSEMBLY	SUPERSEDES	SUP. BY

PIPER AIRCRAFT CORP.
LOCK HAVEN, PENNA.

PART NO.	NO. REQ.	SIZE	DESCRIPTION / MATERIAL
		.032 x 1 x NOTED	NICRAL OR 61ST ALUM.

SCALE FULL SIZE — TOTAL WT.—LBS.
FINISH—PIPER SPECIFICATION #10
MANUFACTURING PRACTICES—PIPER SPECIFICATION #9

BRACES — WING CHANNEL

DRAFTSMAN	CHECKER	STANDARDS
I. BARNARD 3-19-45	R.E. TITUS 3-19-45	

12252

S

490

A490

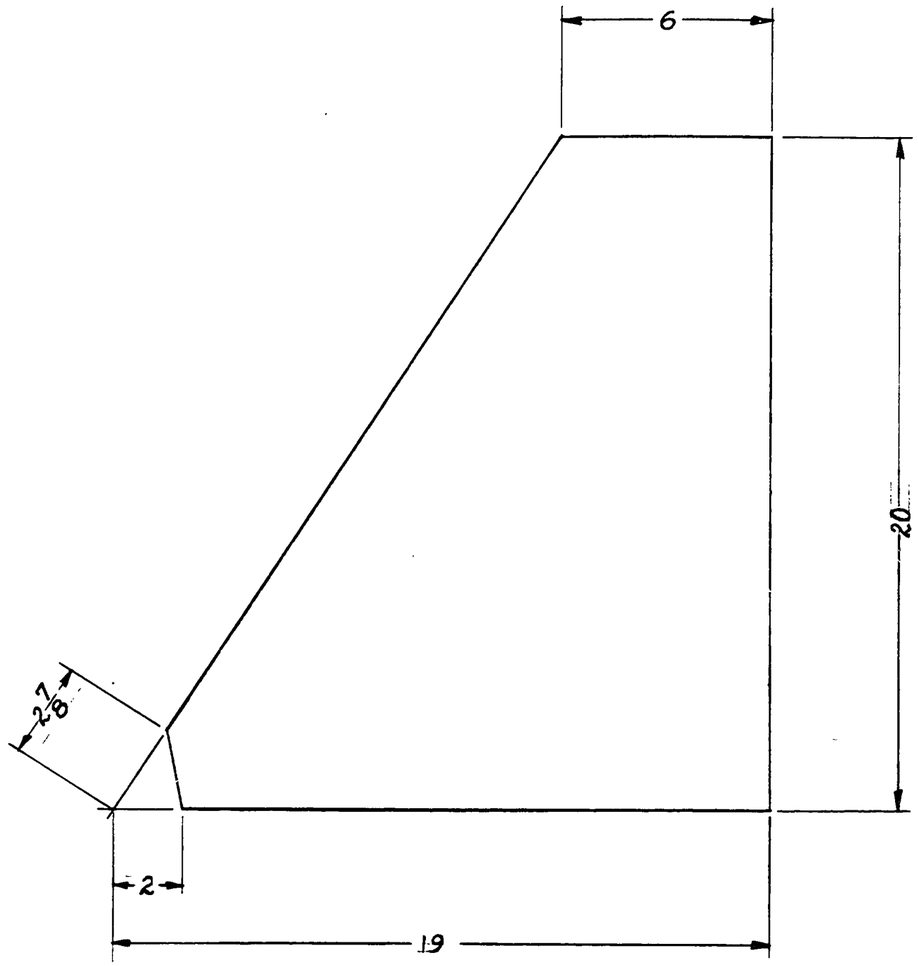
6
20
2 7/8
2
19

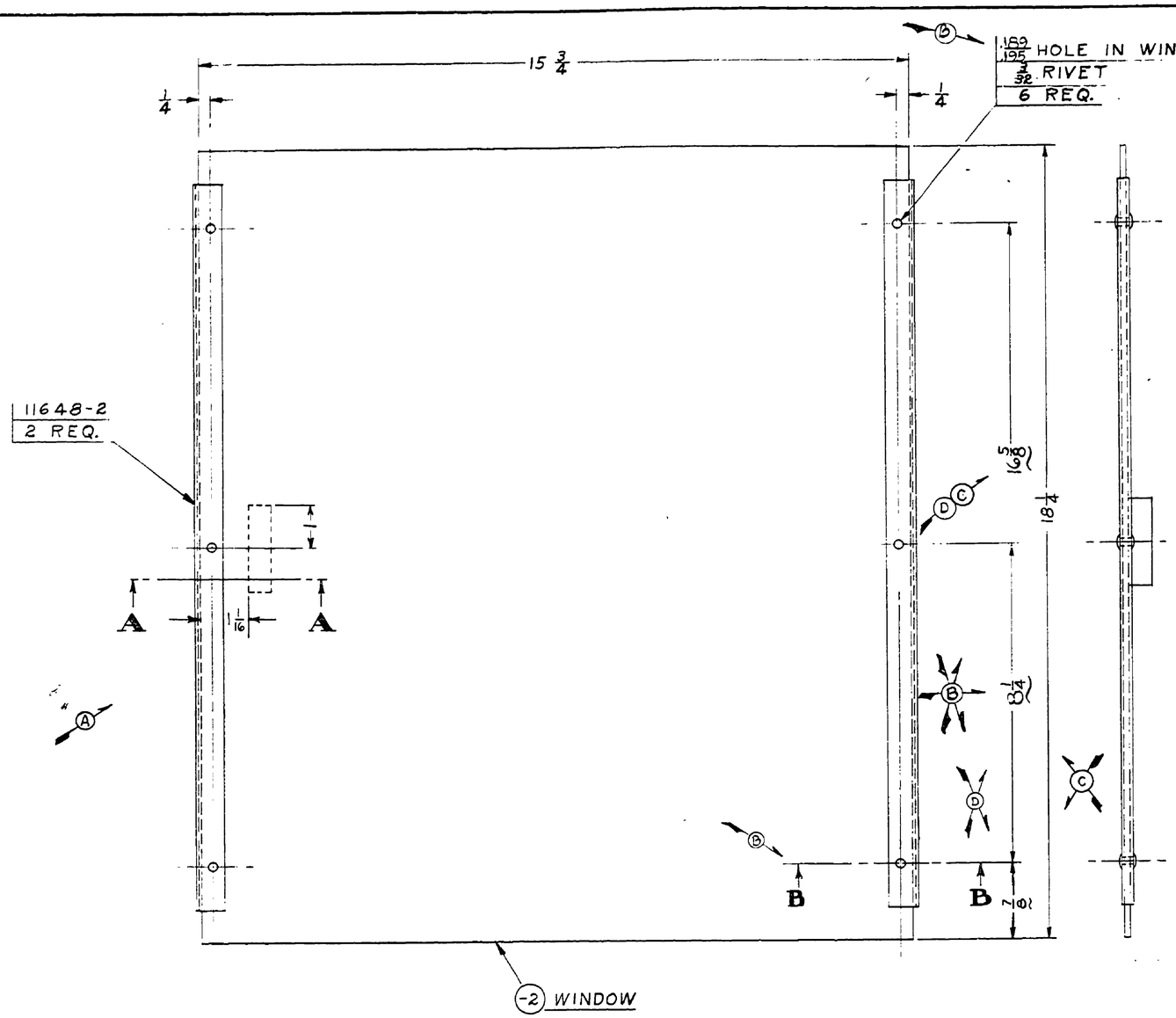

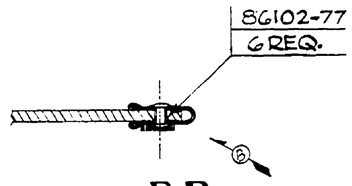

SECTION **B-B**
FULL SIZE

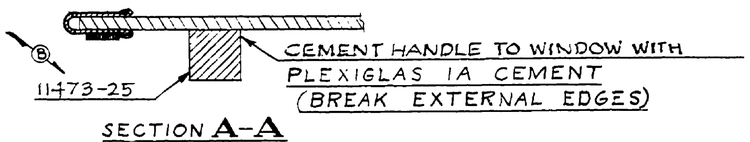

SECTION **A-A**
FULL SIZE

LET.	REVISION	DATE	BY
D	7/8 WAS 5/8; 5/4 WAS 8 3/8; 16 5/8 WAS 16 3/4	12-6-50	HRK
C	5/8 WAS 1 3/8 WAS 8 1/8; 16 1/2 WAS 16 1/4	7-26-50	C.K.
B	G-86102-77 ADDED; VIEWS REVISED	1-13-50	DWG
A	80042-54 RELOCATED	6-28-49	R.R.

THIS DRAWING IS THE PROPERTY OF THE PIPER AIRCRAFT CORP. AND ITS POSSESSION BY UNAUTHORIZED PERSONS SHALL NOT BE CONSTRUED AS PERMISSION TO REPRODUCE FOR SALE, IN WHOLE OR IN PART. ANY DEVICES SHOWN THEREON

MODEL	PER PLANE	NEXT ASSEMBLY	SUPERSEDES	SUP. BY

PIPER AIRCRAFT CORP.
LOCK HAVEN, PENNA.

PART NO.	NO. REQ.	MATERIAL SIZE	DESCRIPTION
86102-77	6	BUSHING	
	6	3/32 × 5/16	2S ALUM. BR. HD. RIVET
11473-25	1	PLATE	
11648-2	2	CHANNEL	
-2	1	.100 × 15 3/4 × 18 1/4	PLEXIGLAS

SCALE 6 IN. = 1 FT. & NOTED — TOTAL WT.—LBS.
FINISH—PIPER SPECIFICATION #10
MANUFACTURING PRACTICES—PIPER SPECIFICATION #9

WINDOW ASSEMBLY— FRONT SLIDING

DRAFTSMAN	CHECKER	STANDARDS
C.E.K. 3-1-49	H.R.K. 3-2-49	

12254

732

A732

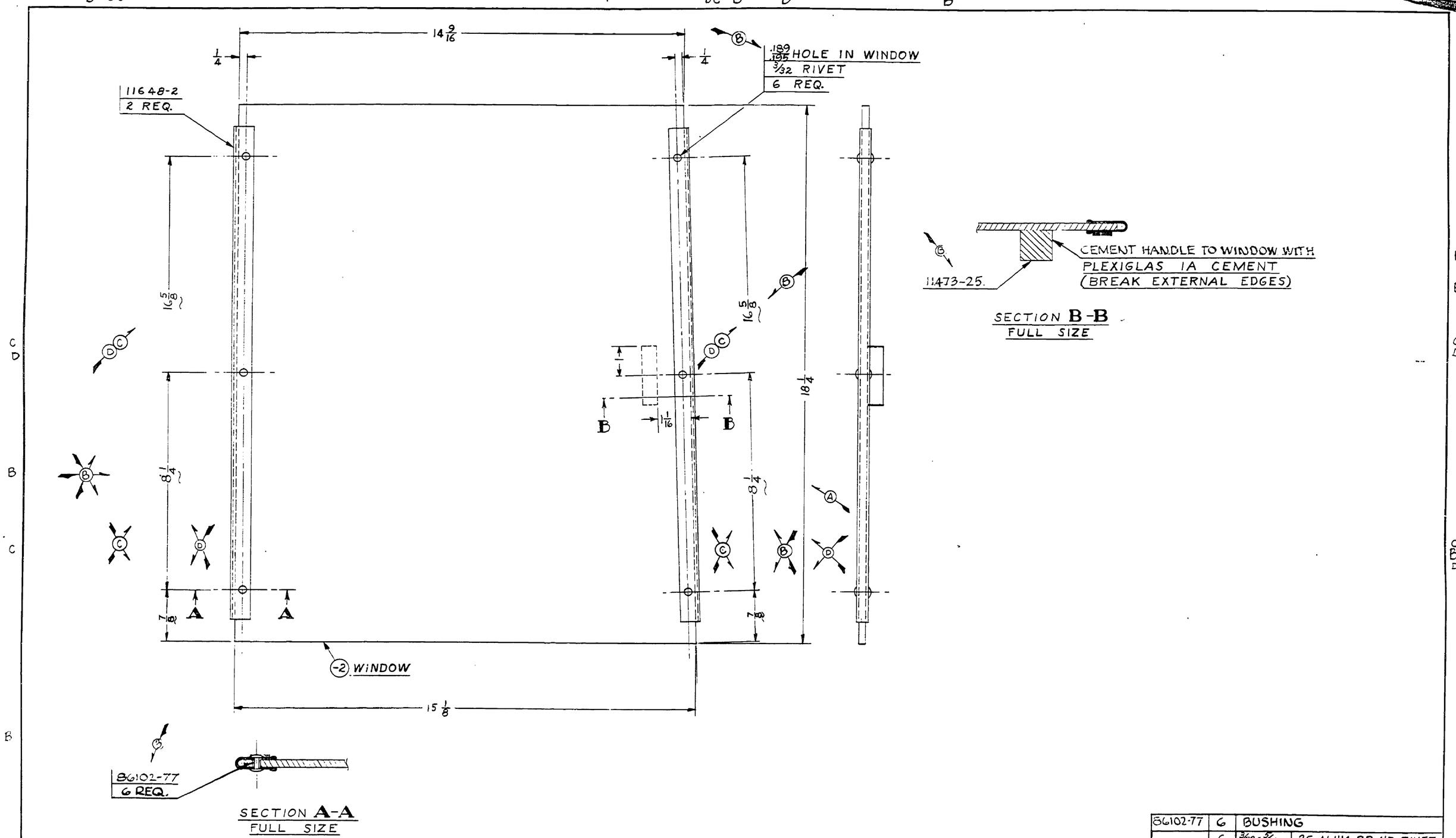

PART NO.	NO. REQ.	SIZE	DESCRIPTION
86102-77	6	BUSHING	
	6	3/32 × 5/16	25 ALUM. BR. HD. RIVET
11473-25	1	PLATE	
11648-2	2	CHANNEL	
-2	1	.100 × 15 1/8 × 18 1/4	PLEXIGLAS

MATERIAL

SCALE 1 IN. = 1 FT. & NOTED | TOTAL WT.—LBS.

FINISH—PIPER SPECIFICATION #10

MANUFACTURING PRACTICES—PIPER SPECIFICATION #9

LET.	REVISION	DATE	BY
D	7/8 WAS 3/4; 8 1/4 WAS 8 3/8; 18 5/8 WAS 16 3/4	12-6-50	H.R.K.
C	3/4 WAS 1, 8 3/8 WAS 8 1/8, 16 3/4 WAS 16 1/4	7-26-50	C.K.
B	1 WAS 1 3/16, 8 1/8 WAS 7 3/8 & 16 1/4 WAS 14 3/4; 6-86102-77 ADDED, VIEWS REVISED; 11473-25 WAS 4 OF 80042-54 [illegible] WAS 5/32	1-13-50	M.G.
A	80042-54 RELOCATED	6-28-49	R.R.

THIS DRAWING IS THE PROPERTY OF THE PIPER AIRCRAFT CORP. AND ITS POSSESSION BY UNAUTHORIZED PERSONS SHALL NOT BE CONSTRUED AS PERMISSION TO REPRODUCE FOR SALE, IN WHOLE OR IN PART, ANY DEVICES SHOWN THEREON

MODEL	PER PLANE	NEXT ASSEMBLY	SUPERSEDES	SUP. BY

PIPER AIRCRAFT CORP.
LOCK HAVEN, PENNA.

WINDOW ASSEMBLY-
REAR SLIDING

DRAFTSMAN	CHECKER	STANDARDS
C.E.K. 3-1-49	H.R.K. 3-2-49	

12255

A733

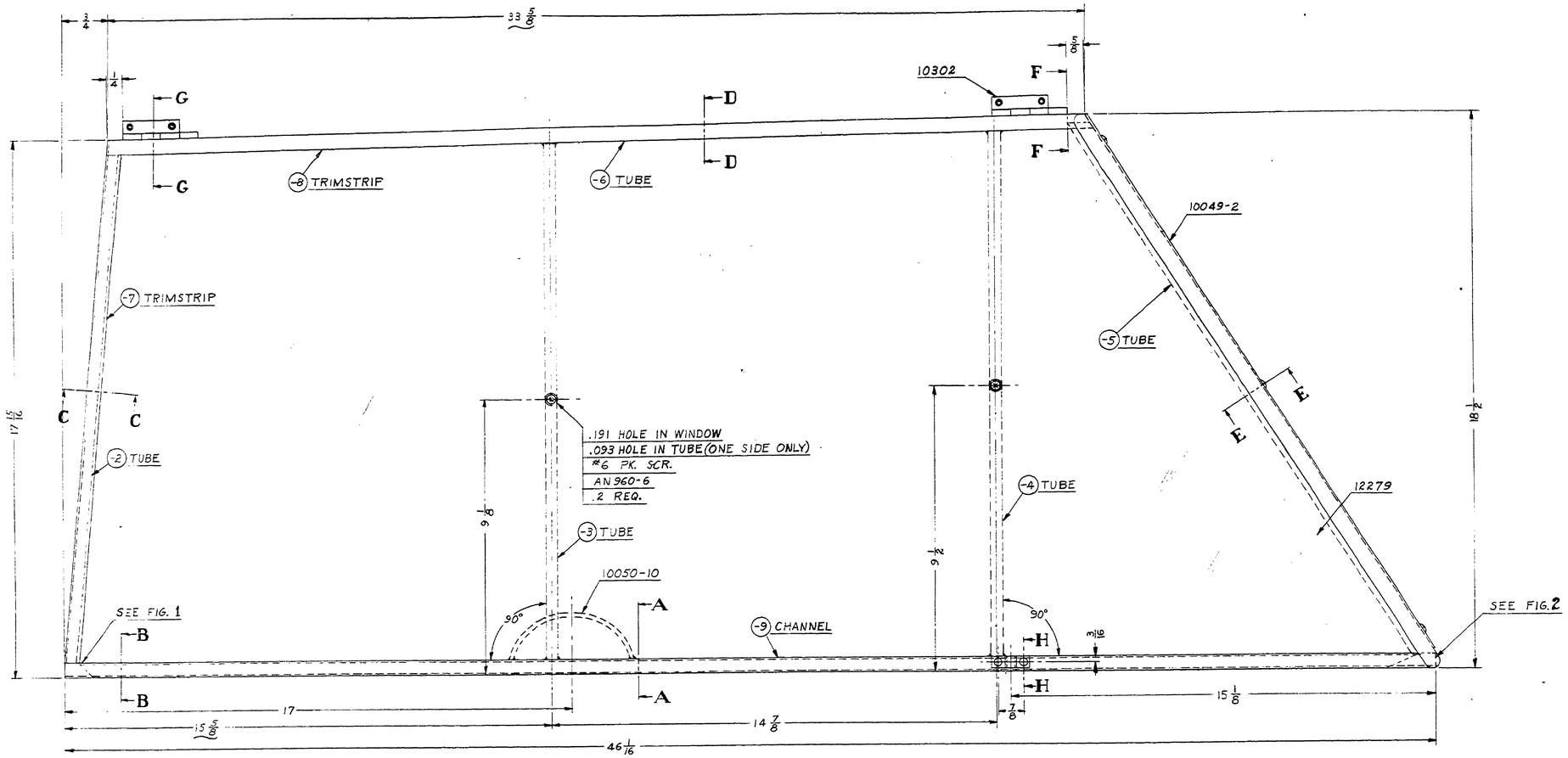

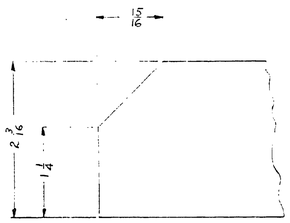

FIG. 1
FULL SIZE
CHANNEL END DETAIL
(FLAT PATTERN)

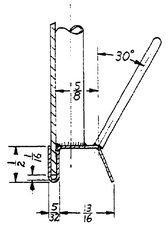

SECTION **A-A**
FULL SIZE

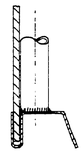

SECTION **B-B**
FULL SIZE

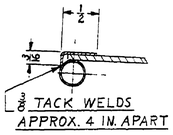

SECTION **C-C**
FULL SIZE

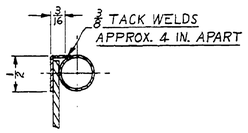

SECTION **D-D**
FULL SIZE

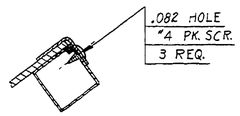

SECTION **E-E**
FULL SIZE

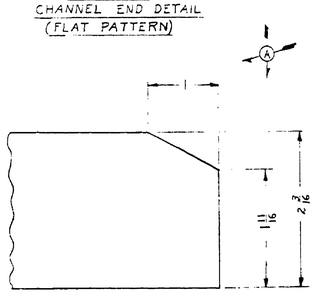

FIG. 2
FULL SIZE
CHANNEL END DETAIL
(FLAT PATTERN)

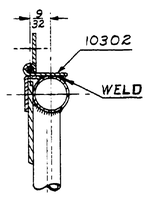

SECTION **G-G**
FULL SIZE

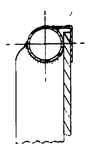

SECTION **F-F**
FULL SIZE

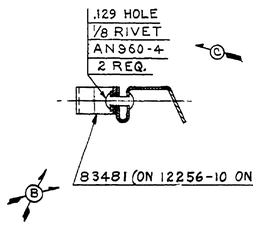

SECTION **H-H**
FULL SIZE

12256 SHOWN
12256-10 WITH DOOR CATCH STUD 83481
INSTALLED AS SHOWN IN SEC. H-H

PART NO.	NO. REQ.	SIZE	DESCRIPTION
AN960-4	2		WASHER
	2	1/8 × 1/2	2S ALUM BR. HD. RIVET ON 12256-10
83481	1		CATCH STUD ONLY
85161	REF.		SQ. TUBE SECTION
"4	3	1/4 L.	TYPE "A" STOVE HD. PK. SCR.
"6	2	3/8 L.	
AN960-6	2		WASHER
12279	1		WINDOW
10302	2		HINGE ASSY.
10050-10	1		HANDLE
10049-2	1		TRIMSTRIP
-9	1	.032 × 2 3/16 × 46 1/16	"1025 STL.
-8	1	.032 × 5/8 × 34	"1025 STL.
-7	1	.032 × 5/8 × 17	"1025 STL.
-6	1	1/2 × .028 × 34	"1025 STL. TUBE
-5	1	21 3/8 L	PIPER SEC. 85161
-4	1	7/8 × .028 × 17 1/2	"1025 STL. TUBE
-3	1	3/8 × .028 × 17 1/2	"1025 STL. TUBE
-2	1	1/2 × .028 × 17	"1025 STL. TUBE

MATERIAL
SCALE 6 IN. = 1 FT. & NOTED | TOTAL WT.—LBS.
FINISH—PIPER SPECIFICATION #10
MANUFACTURING PRACTICES—PIPER SPECIFICATION #9

LET.	REVISION	DATE	BY
C	83481 ATTACH. REVISED	3-5-51	I.M.H.
B	-083481 ATTACH. ADDED	3-9-50	C.K.
A	85161 WAS 85161-2 11/16 WAS 1 5/16, 1 WAS 1 3/16 PER FIG 2	2-7-49	K.D.

MODEL PER PLANE | NEXT ASSEMBLY | SUPERSEDES | SUP. BY

THIS DRAWING IS THE PROPERTY OF THE PIPER AIRCRAFT CORP. AND ITS POSSESSION BY UNAUTHORIZED PERSONS SHALL NOT BE CONSTRUED AS PERMISSION TO REPRODUCE FOR SALE, IN WHOLE OR IN PART, ANY DEVICES SHOWN THEREON.

PIPER AIRCRAFT CORP.
LOCK HAVEN, PENNA.

DOOR ASSEMBLY—
ENCLOSURE UPPER

DRAFTSMAN	CHECKER	STANDARDS	
C.E.K. 3-8-49	H.R.K. 3-9-49		12256

Philadelphia Blue Print Co. 150 8-1-46

A843

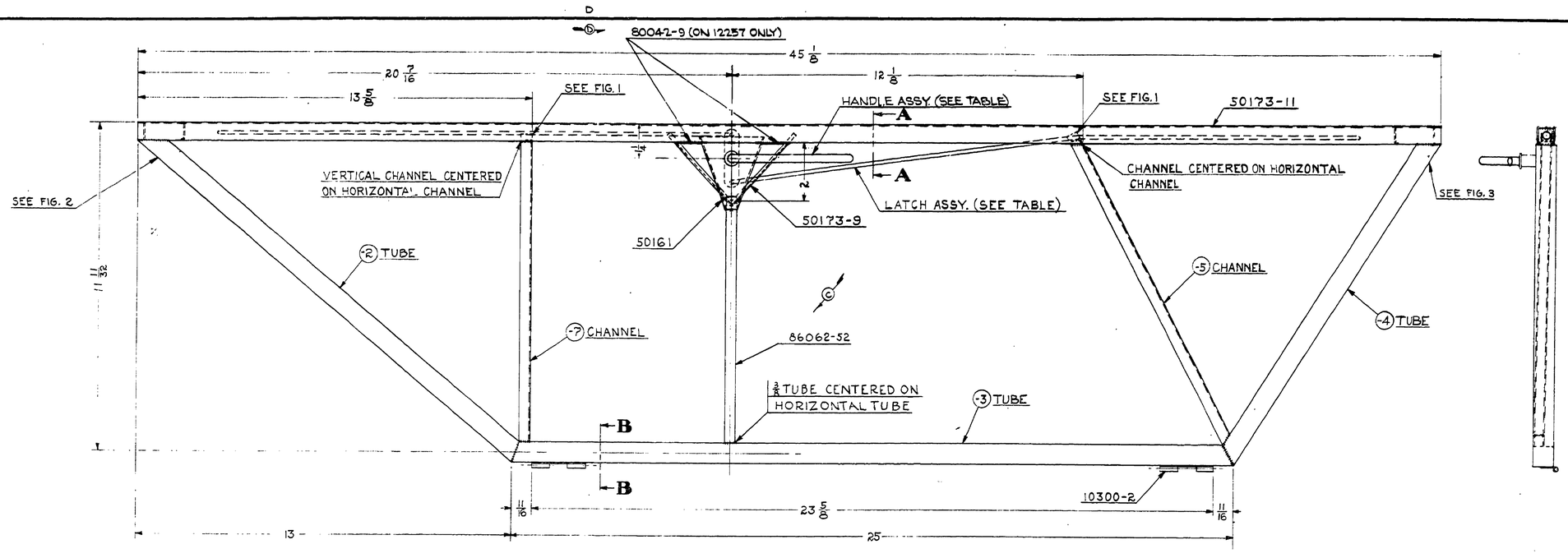

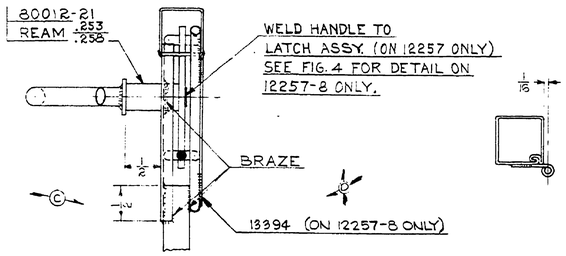

SECTION A–A
FULL SIZE

SECTION B–B
FULL SIZE

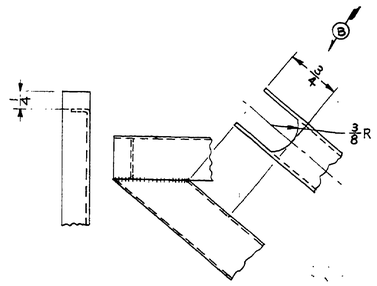

FIG. 1
CHANNEL END DETAIL

FIG. 2
TUBE END DETAIL
FULL SIZE

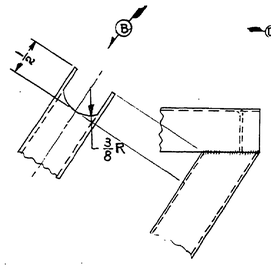

FIG 3
TUBE END DETAIL
FULL SIZE

ASSY. NO.	HANDLE ASSY.	LATCH ASSY.	REMARKS
12257	50173-12	50192	AS SHOWN & NOTED
12257-8	13397	50192-4	AS SHOWN & NOTED

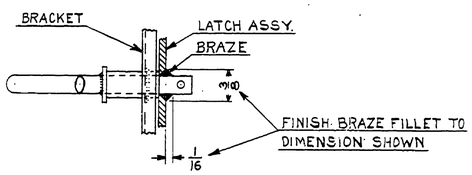

FIG. 4
BRAZING DETAIL
(ON 12257-8 ONLY)
FULL SIZE

LEV.	REVISION	DATE	BY
D	-8, NOTES & FIG. 4 ADDED	5-11-51	M.G.
C	80042-52 WAS 12257-6; IN VIEW AA, 1/2 WAS 1/4	7-12-50	K.D.
B	NOTCHES ADDED TO -2 & -4 TUBES	3-16-50	C.K.
A	85161 WAS 85161-2	2-14-49	K.D.

MODEL | PER PLANE | NEXT ASSEMBLY | SUPERSEDES | SUP. BY

THIS DRAWING IS THE PROPERTY OF THE PIPER AIRCRAFT CORP. AND ITS POSSESSION BY UNAUTHORIZED PERSONS SHALL NOT BE CONSTRUED AS PERMISSION TO REPRODUCE FOR SALE, IN WHOLE OR IN PART, ANY DEVICES SHOWN THEREON.

PIPER AIRCRAFT CORP.
LOCK HAVEN, PENNA.

PART NO.	No. REQ.	MATERIAL SIZE	DESCRIPTION
50192-4	1		LATCH ASSY. (SEE TABLE)
13394	1		PLATE (ON 12257-8 ONLY)
13397	1		HANDLE ASSY. (SEE TABLE)
86062-52	1		TUBE
85161	REF.		SQUARE TUBE SECTION
84501-2	REF.		CHANNEL SECTION
80042-9	2		PLATE (ON 12257 ONLY)
80012-21	x1		BUSHING
50192	1		LATCH. ASSY. (SEE TABLE)
50173-12	1		HANDLE ASSY. (SEE TABLE)
50173-11	1		CHANNEL ASSY.
50173-9	1		BRACE
50161	1		BRACKET
10300-2	2		HINGE
-7	1	105/8 LONG	
-6	1	25 LONG	PIPER SECTION 84501-2
-5	1	12 LONG	
-4	1	13 3/16 LONG	
-3	1	25 LONG	PIPER SECTION 85161
-2	1	17 LONG	

MATERIAL

SCALE 6 IN. = 1 FT. & NOTED | TOTAL WT.—LBS.

FINISH—PIPER SPECIFICATION 210

MANUFACTURING PRACTICES—PIPER SPECIFICATION 29

FRAME ASSEMBLY—ENCLOSURE LOWER DOOR

DRAFTSMAN	CHECKER	STANDARDS
H.R.K 2-28-49	J.C.B. 3-16-49	

12257

A844

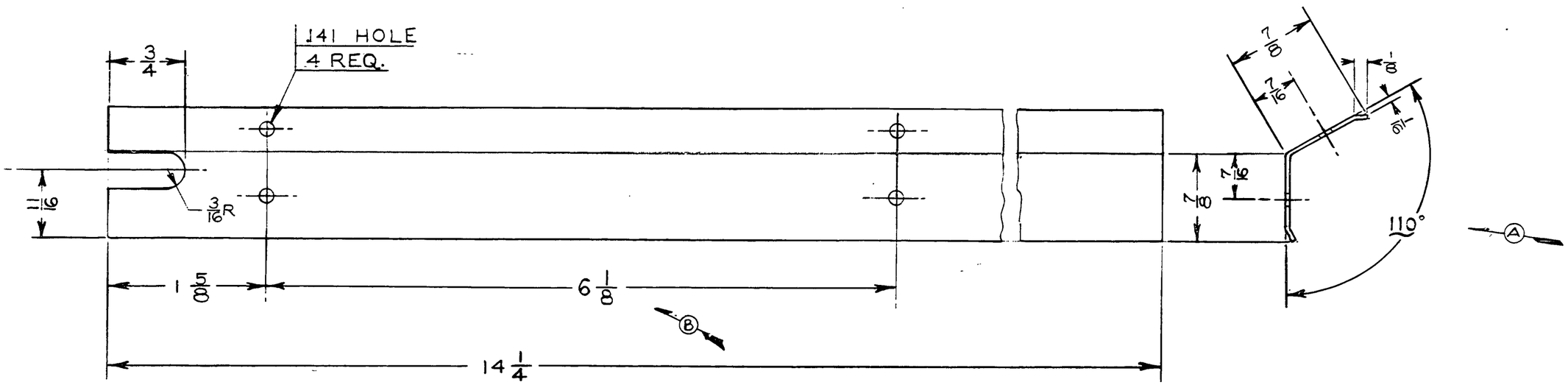

12258 L.H. SHOWN
12258-1 R.H. OPPOSITE

LET.	REVISION	DATE	BY
B	6 1/8 WAS 7 3/4	9-18-50	HRK
A	110° ANGLE WAS 120°	8-21-50	FCS

MODEL	PER PLANE	NEXT ASSEMBLY	SUPERSEDES	SUP. BY

THIS DRAWING IS THE PROPERTY OF THE PIPER AIRCRAFT CORP. AND ITS POSSESSION BY UNAUTHORIZED PERSONS SHALL NOT BE CONSTRUED AS PERMISSION TO REPRODUCE FOR SALE, IN WHOLE OR IN PART, ANY DEVICES SHOWN THEREON.

PIPER AIRCRAFT CORP.
LOCK HAVEN, PENNA.

PART NO.	No. REQ.	SIZE	DESCRIPTION
		.032 x 1 3/4 x 14 1/4	3S-1/2H ALUM.
		MATERIAL	

SCALE FULL SIZE — TOTAL WT.–LBS.
FINISH–PIPER SPECIFICATION #10
MANUFACTURING PRACTICES–PIPER SPECIFICATION #9

TRIMSTRIP–WINDOW

DRAFTSMAN	CHECKER	STANDARDS
R.T.M. 2-24-49	H.R.K. 3-1-49	

12258

492

A492

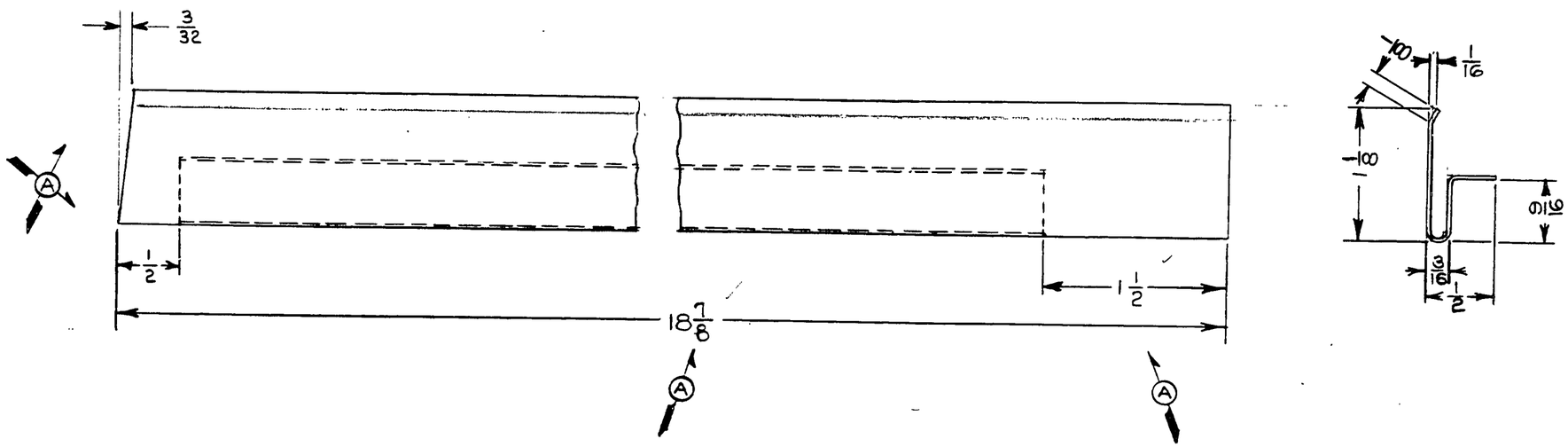

PART No.	No. REQ.	SIZE	MATERIAL DESCRIPTION
		.032 x 2 1/4 x 18 7/8	3S-1/2H ALUM.

SCALE FULL SIZE | TOTAL WT.–LBS.

FINISH–PIPER SPECIFICATION #10

MANUFACTURING PRACTICES–PIPER SPECIFICATION #9

MODEL	PER PLANE	NEXT ASSEMBLY	SUPERSEDES	SUP. BY

THIS DRAWING IS THE PROPERTY OF THE PIPER AIRCRAFT CORP. AND ITS POSSESSION BY UNAUTHORIZED PERSONS SHALL NOT BE CONSTRUED AS PERMISSION TO REPRODUCE FOR SALE, IN WHOLE OR IN PART, ANY DEVICES SHOWN THEREON.

TRIMSTRIP –WINDOW

LET.	REVISION	DATE	BY
A	18 7/8 WAS 18 1/4; 1 1/2 WAS 1; 1/2 & 3/32 DIM. ADDED	2-28-51	I.M.M.

PIPER AIRCRAFT CORP.
LOCK HAVEN, PENNA.

DRAFTSMAN	CHECKER	STANDARDS
R.T.M. 2-24-49	H.R.K. 3-1-49	

12259

495

A493

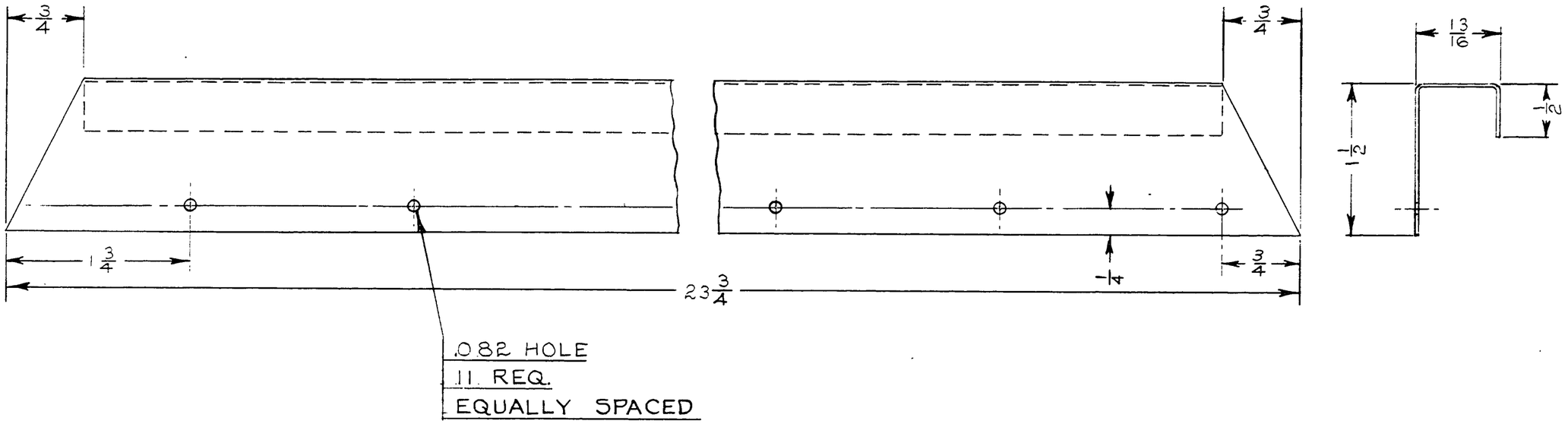

LET.	REVISION	DATE	BY

MODEL	PER PLANE	NEXT ASSEMBLY	SUPERSEDES	SUP. BY

THIS DRAWING IS THE PROPERTY OF THE PIPER AIRCRAFT CORP. AND ITS POSSESSION BY UNAUTHORIZED PERSONS SHALL NOT BE CONSTRUED AS PERMISSION TO REPRODUCE FOR SALE, IN WHOLE OR IN PART, ANY DEVICES SHOWN THEREON.

PIPER AIRCRAFT CORP.
LOCK HAVEN, PENNA.

PART No.	No. REQ.	SIZE	DESCRIPTION / MATERIAL
		.032 x 2 13/16 x 23 3/4	3S-½H ALUM.

SCALE FULL SIZE — TOTAL WT.–LBS.

FINISH–PIPER SPECIFICATION #10

MANUFACTURING PRACTICES–PIPER SPECIFICATION #9

TRIMSTRIP –WINDOW

DRAFTSMAN	CHECKER	STANDARDS
R.T.M 2-24-49	H.R.K. 3-2-49	

12260

494

A494

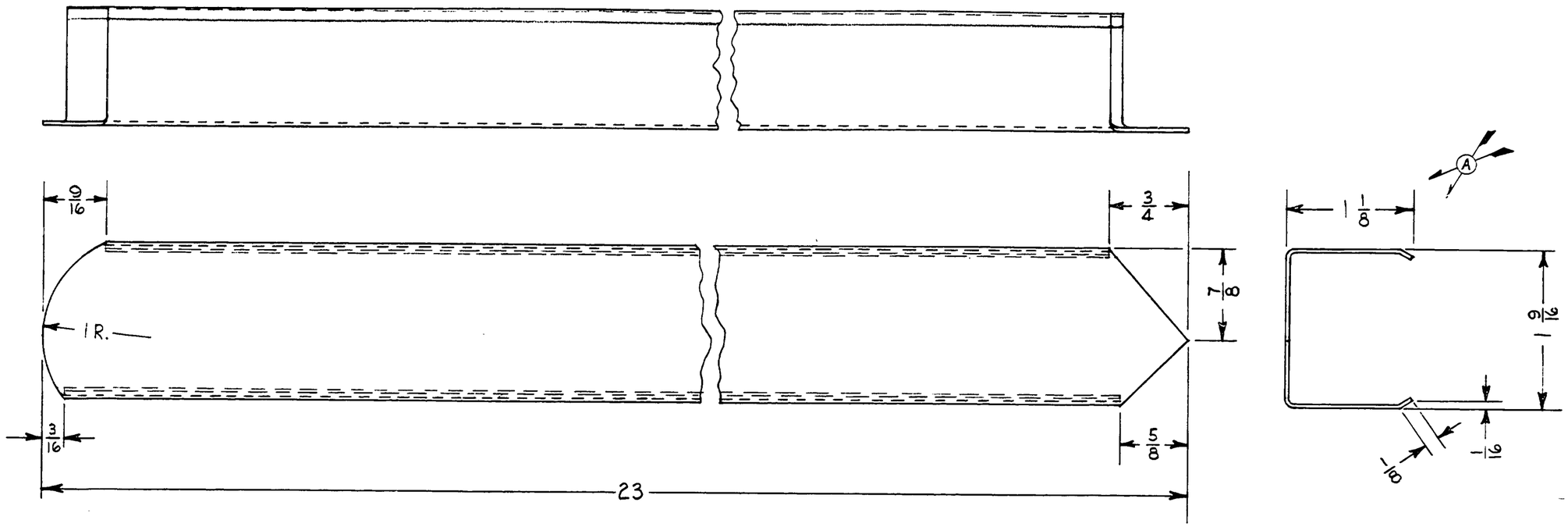

LET.	REVISION	DATE	BY
A	.093 HOLES REM.; 1½ WAS ¾; .025 24 S-T WAS .032 3S ½ H. ALUM.; FABRIC BREAK ADDED	6-28-49	RQR.

MODEL | PER PLANE | NEXT ASSEMBLY | SUPERSEDES | SUP. BY

THIS DRAWING IS THE PROPERTY OF THE PIPER AIRCRAFT CORP. AND ITS POSSESSION BY UNAUTHORIZED PERSONS SHALL NOT BE CONSTRUED AS PERMISSION TO REPRODUCE FOR SALE, IN WHOLE OR IN PART, ANY DEVICES SHOWN THEREON.

PIPER AIRCRAFT CORP.
LOCK HAVEN, PENNA.

PART No.	No. REQ.	SIZE	MATERIAL
		.025 x 3¾ x 23	24S-T ALUM.

SCALE FULL SIZE | TOTAL WT.—LBS.

FINISH—PIPER SPECIFICATION #10

MANUFACTURING PRACTICES—PIPER SPECIFICATION #9

TRIMSTRIP - WINDOW

DRAFTSMAN	CHECKER	STANDARDS
R.T.M. 2-24-49	H.R.K. 3-2-49	

12261

495

A495

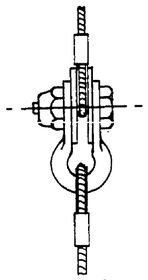

SECTION A–A
FULL SIZE

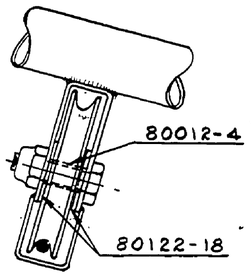

SECTION B–B
FULL SIZE

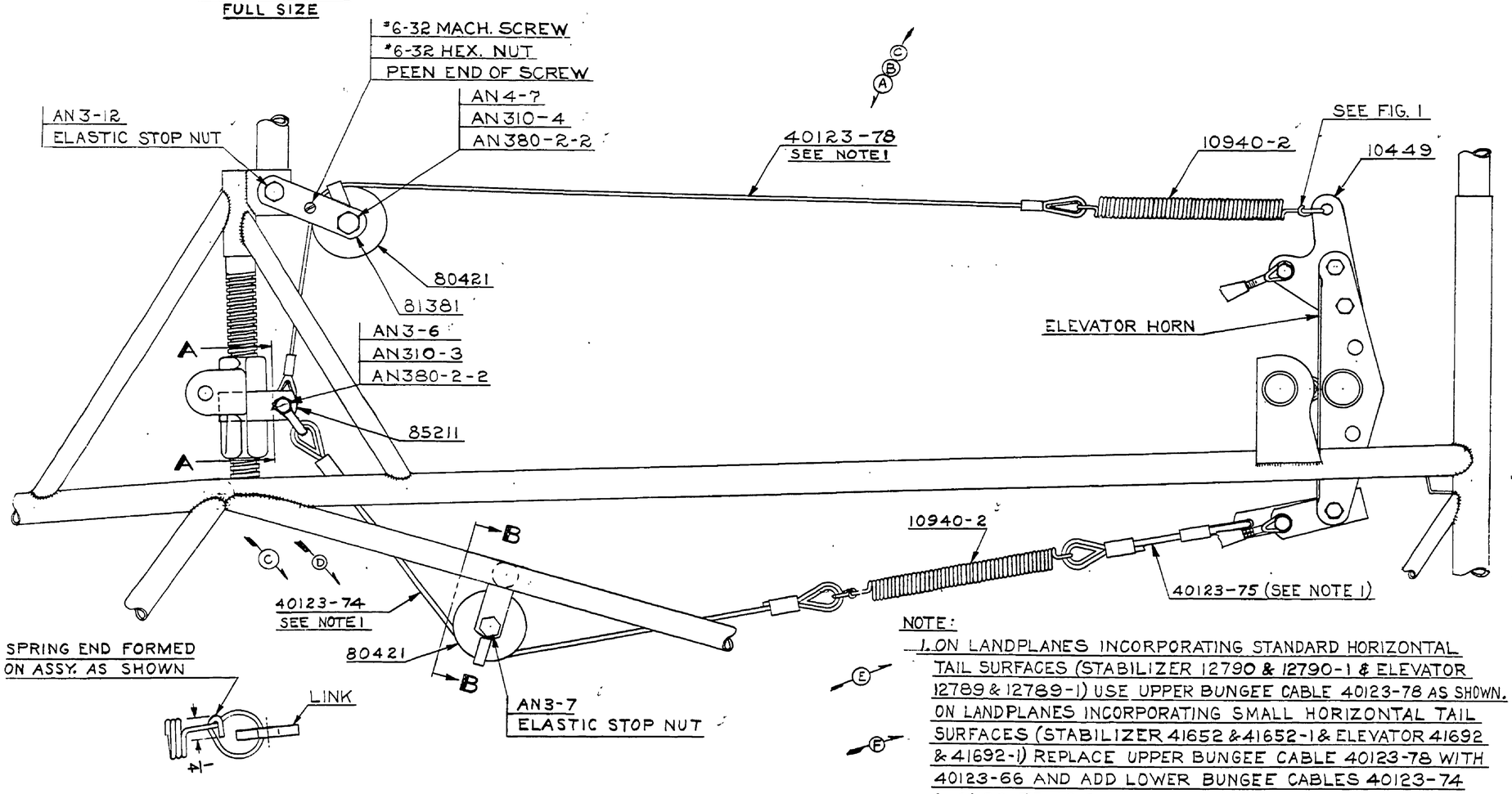

FIG. 1
SPRING ATTACH. DETAIL
FULL SIZE

NOTE:

1. ON LANDPLANES INCORPORATING STANDARD HORIZONTAL TAIL SURFACES (STABILIZER 12790 & 12790-1 & ELEVATOR 12789 & 12789-1) USE UPPER BUNGEE CABLE 40123-78 AS SHOWN. ON LANDPLANES INCORPORATING SMALL HORIZONTAL TAIL SURFACES (STABILIZER 41652 & 41652-1 & ELEVATOR 41692 & 41692-1) REPLACE UPPER BUNGEE CABLE 40123-78 WITH 40123-66 AND ADD LOWER BUNGEE CABLES 40123-74 & 40123-75 AS SHOWN.
ON ALL PA-18 "105" SEAPLANES USE UPPER & LOWER BUNGEE CABLES (SEE PA-18 COMPLETE AIRPLANE DRAWING FOR CABLE NOS.).
ON ALL PA-18 "125" SEAPLANES USE ONLY UPPER BUNGEE CABLE (SEE PA-18 COMPLETE AIRPLANE DRAWING FOR CABLE NO.).

PART NO.	NO. REQ.	SIZE	DESCRIPTION / MATERIAL
40123-74	1		CABLE ASSY (SEE NOTE 1)
40123-66	1		CABLE ASSY (SEE NOTE 1)
AN310-3	1		NUT
AN3-7	1		BOLT (SEE NOTE 1)
80122-18	2		WASHER (SEE NOTE 1)
80012-4	1		BUSHING (SEE NOTE 1)
40123-75	1		CABLE ASSY. (SEE NOTE 1)
	2		*22M02 ELASTIC STOP NUT (SEE NOTE 1)
*6-32	1		HEX. NUT
*6-32	1	3/4 L.	RD. HD. MACH. SCREW
AN380-2-2	2		COTTER PIN
AN310-4	1		NUT
AN4-7	1		BOLT
AN3-12	1		BOLT
AN3-6	1		BOLT
85211	1		CLAMP
81381	1		PULLEY HOUSING ASS'Y.
80421	2		PULLEY (SEE NOTE 1)
40123-78	1		CABLE ASS'Y. (SEE NOTE 1)
10940-2	2		SPRING
10449	1		LINK

SCALE 6 IN. = 1 FT. & NOTED | TOTAL WT.—LBS.
FINISH—PIPER SPECIFICATION #10
MANUFACTURING PRACTICES—PIPER SPECIFICATION #9

LET.	REVISION	DATE	BY
F	NOTE 1 REVISED	6-7-51	HRK
E	NOTE REVISED TO INCLUDE SEAPLANES	7-28-50	K.D.
D	NOTE REVISED; 40123-74 WAS 40123-75	6-2-50	HRK
C	40123-79 WAS 40123-74 40123-78 WAS 40123-66	1-5-50	R.C.
B	40123-84 WAS 40123-8	12-2-49	K.D.
A	40123-8 WAS 40123-66	11-9-49	R.R.

THIS DRAWING IS THE PROPERTY OF THE PIPER AIRCRAFT CORP. AND ITS POSSESSION BY UNAUTHORIZED PERSONS SHALL NOT BE CONSTRUED AS PERMISSION TO REPRODUCE FOR SALE, IN WHOLE OR IN PART, ANY DEVICES SHOWN THEREON

MODEL	PER PLANE	NEXT ASSEMBLY	SUPERSEDES	SUP. BY

PIPER AIRCRAFT CORP.
LOCK HAVEN, PENNA.

BUNGEE INSTALLATION

DRAFTSMAN	CHECKER	STANDARDS	
C. E. K. 8-10-49	H.R.K. 8-11-49		12263

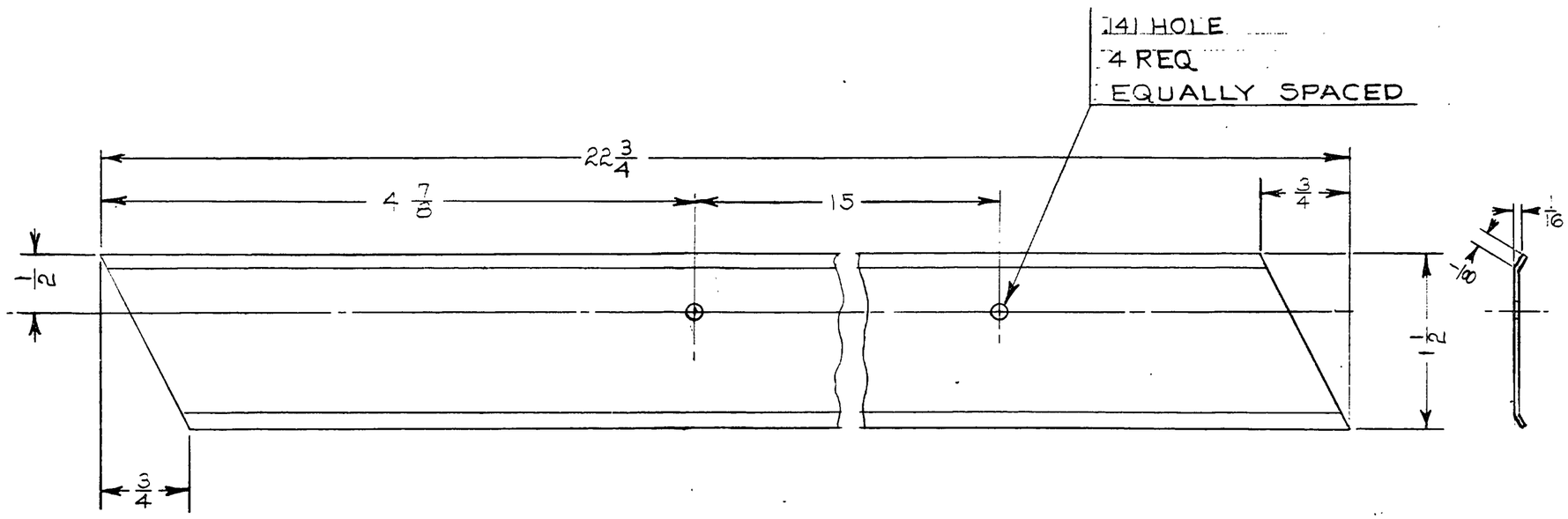

12264 L.H. SHOWN
12264-1 R.H. OPPOSITE

LET.	REVISION	DATE	BY

MODEL	PER PLANE	NEXT ASSEMBLY	SUPERSEDES	SUP. BY

THIS DRAWING IS THE PROPERTY OF THE PIPER AIRCRAFT CORP. AND ITS POSSESSION BY UNAUTHORIZED PERSONS SHALL NOT BE CONSTRUED AS PERMISSION TO REPRODUCE FOR SALE, IN WHOLE OR IN PART. ANY DEVICES SHOWN THEREON.

PIPER AIRCRAFT CORP.
LOCK HAVEN, PENNA.

PART No.	No. REQ.	SIZE	DESCRIPTION / MATERIAL
		.025×1½×22¾	3S-½H ALUM.

SCALE FULL SIZE | TOTAL WT.–LBS.
FINISH–PIPER SPECIFICATION #10
MANUFACTURING PRACTICES–PIPER SPECIFICATION #9

TRIMSTRIP

DRAFTSMAN	CHECKER	STANDARDS
R.T.M. 2-24-49	H.R.K. 3-2-49	

12264

12264 496

A496

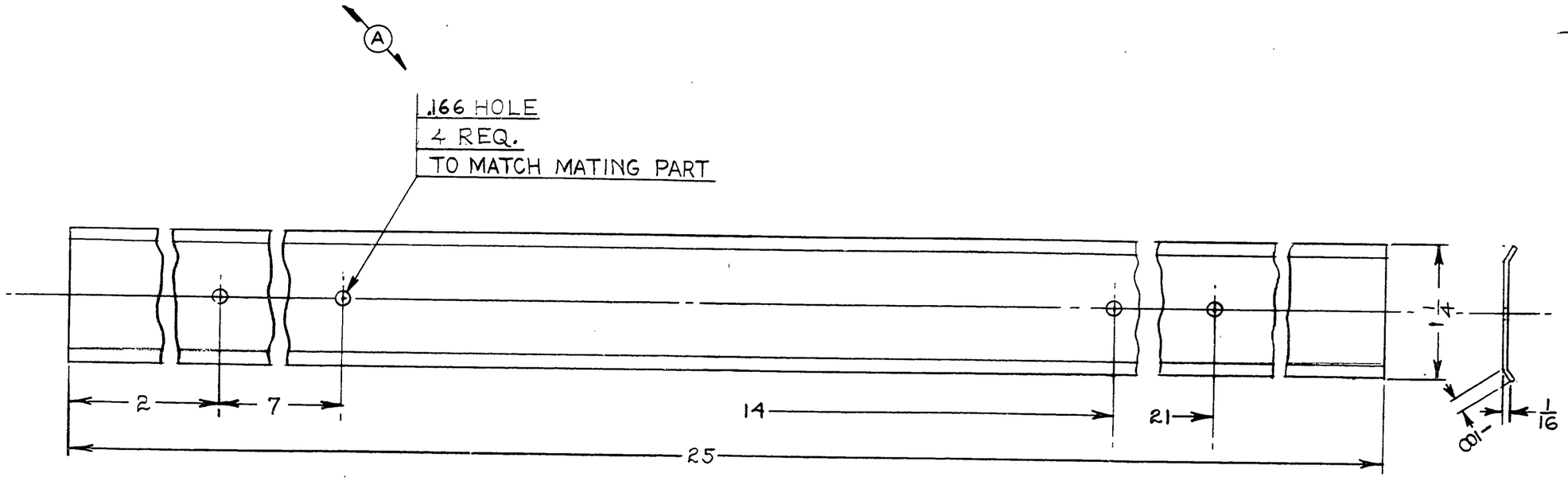
A
.166 HOLE
4 REQ.
TO MATCH MATING PART
2
7
14
21
25
1/4
1/16
10°

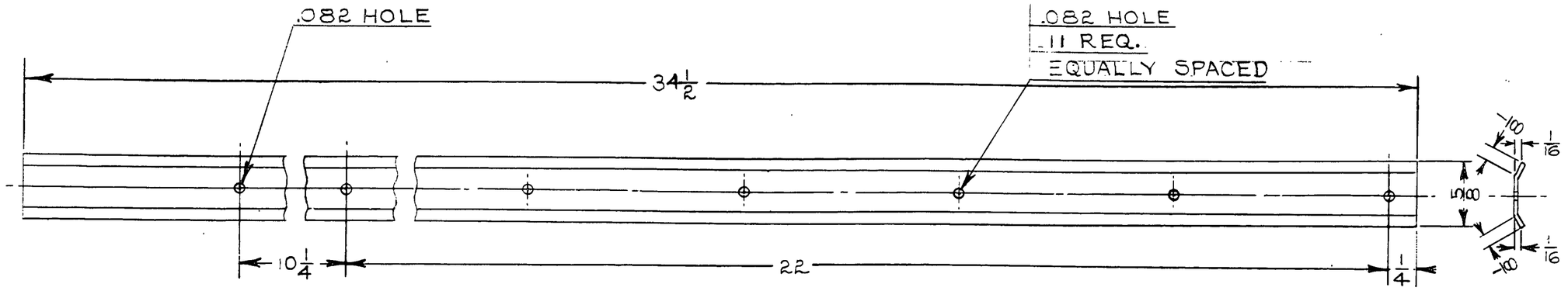

-2 DETAIL

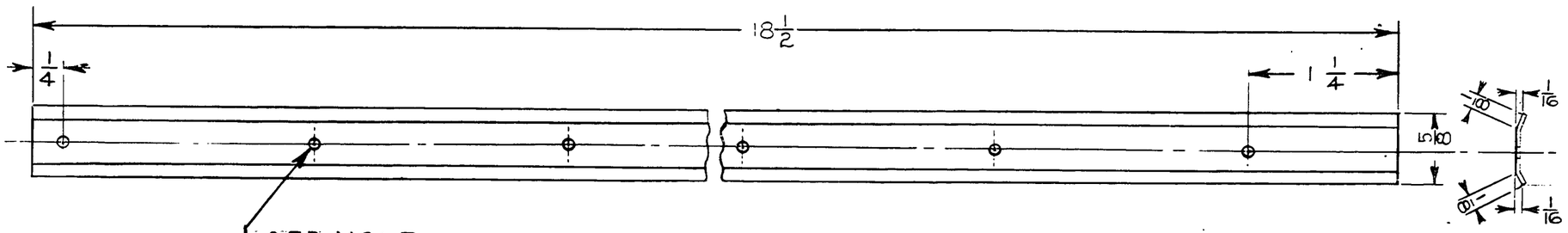

.082 HOLE
9 REQ.
EQUALLY SPACED

-3 DETAIL

PART No.	No. REQ.	SIZE	DESCRIPTION
-3	1	.020 × 5/8 × 18 1/2	24S-T ALUM
-2	1	.020 × 5/8 × 34 1/2	24S-T ALUM

MATERIAL

SCALE FULL SIZE | TOTAL WT.–LBS.

FINISH–PIPER SPECIFICATION #10

MANUFACTURING PRACTICES–PIPER SPECIFICATION #9

LET.	REVISION	DATE	BY

MODEL	PER PLANE	NEXT ASSEMBLY	SUPERSEDES	SUP. BY

THIS DRAWING IS THE PROPERTY OF THE PIPER AIRCRAFT CORP. AND ITS POSSESSION BY UNAUTHORIZED PERSONS SHALL NOT BE CONSTRUED AS PERMISSION TO REPRODUCE FOR SALE, IN WHOLE OR IN PART, ANY DEVICES SHOWN THEREON.

PIPER AIRCRAFT CORP.
LOCK HAVEN, PENNA.

STRIP-MOULDING ATTACHMENT

DRAFTSMAN	CHECKER	STANDARDS
R.T.M. 2-24-49	H.R.K. 3-2-49	

12266

498

A498

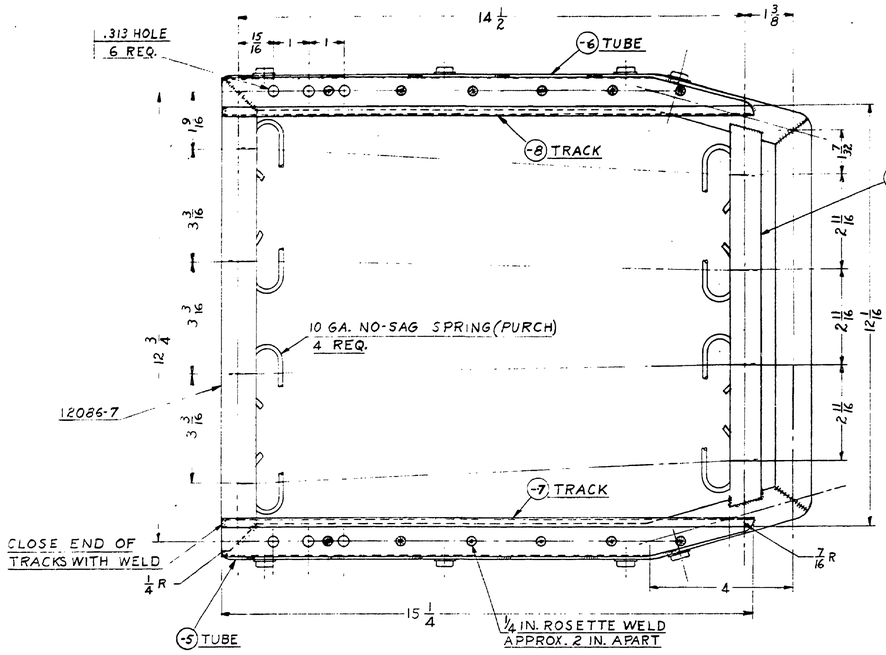

VIEW A-A

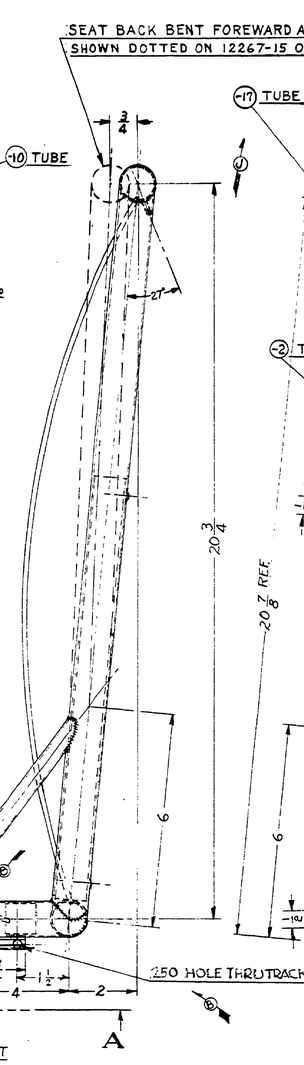

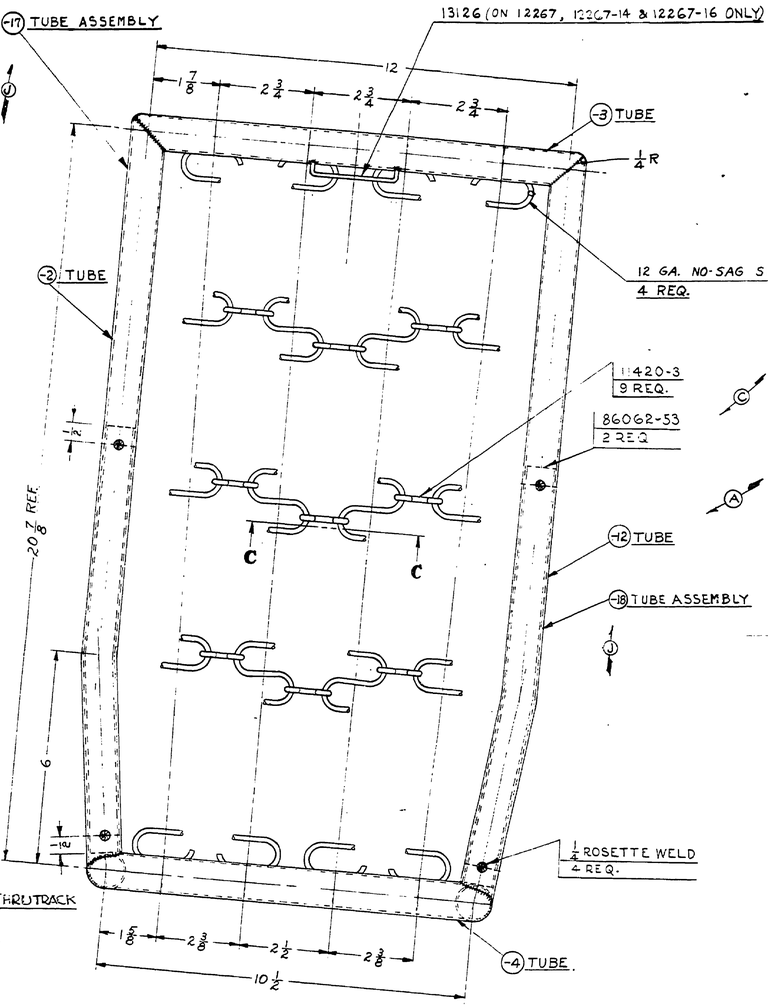

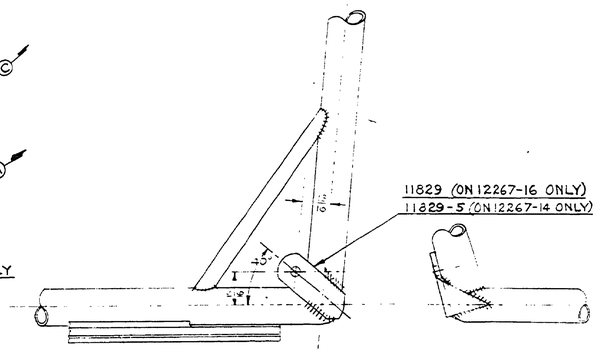

FIG. 2
SAFETY BELT FITTING INSTALLATION
(ON 12267-14 & 12267-16 ONLY)

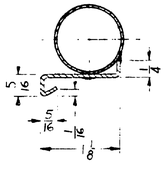

SECTION B-B
FULL SIZE

BEND ENDS AS SHOWN

SECTION C-C
FULL SIZE

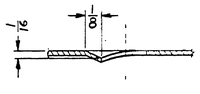

SECTION D-D
TWICE SIZE

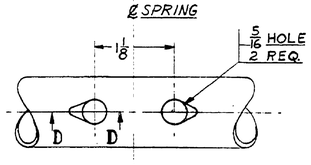

FIG 1
TYPICAL HOLE FOR SPRING INST.
FULL SIZE

-Ⓒ 12267 ASSY. AS SHOWN
12267-14 ASSY WITH SAFETY BELT FTG 11829-5
AS SHOWN IN FIG. 2.
12267-15 ASSY. AS SHOWN & NOTED.
-Ⓗ 12267-16 ASSY AS SHOWN & NOTED.

-18	—	SUB-ASSY. CONSISTS OF -12 & 86062-53	
-17	—	SUB-ASSY. CONSISTS OF -2 & 86062-53	
-3	2	1/4 R, .120, 1/16, 1/2, 2 1/2, 3/32	
-12	1	.945/946 I.D. x .028 x 21 3/4	#4130 SEAMLESS STEEL TUBE
11829	2	PLATE (ON 12267-16 ONLY)	
13126	1	ROD (ON 12267, 12267-14 & 12267-16 ONLY)	
11829-5	2	PLATE (ON 12267-14 ONLY)	
86062-53	2	LINER TUBE	
-4	1	3/8 x 3/8 x .120 C.F. STL	
	8	DURABLE DOT STUD #459	
	4	12 GA. x 19 1/2 L	NO-SAG SPRING
	4	10 GA. x 13 1/2 L	PURCH. KAY MFG. CO.
85551	REF	SQ. TUBE SECTION	
12086-7	1	TUBE	
11420-3	9	LINK	
-10	1	11 IN. LONG	PIPER SEC. 85551
-9	2	1/2 x .028 x 6 7/8	#1025 S.S. TUBE
-8	1	.062 x 2 x 15 1/4	#1025 STL.
-7	1	.062 x 2 x 15 1/4	
-6	1	1 x .049 x 17	#4130 STL. TUBE
-5	1	1 x .049 x 17	
-4	1	.945/946 I.D. x .028 x 11 1/4	#4130 SEAMLESS STL. TUBE
-3	1	.945/946 I.D. x .028 x 13	
-2	1	.945/946 I.D. x .028 x 21 3/4	
PART No.	No. REQ.	SIZE DESCRIPTION MATERIAL	

SCALE 6 IN. LIFT & NOTED — TOTAL WT.—LBS.
FINISH—PIPER SPECIFICATION #10
MANUFACTURING PRACTICES—PIPER SPECIFICATION #8

J	-17 & -18 ADDED	6-8-51	C.M.H.
H	-16 ADDED	6-1-51	C.K.
G	-15 ADDED	2-26-51	C.K.
F	13126 ADDED	11-17-50	C.K.
E	-13 CANCELED	9-19-50	K.D.
D	12267-14 ADDED	6-26-50	F.C.S.
C	86062-53 ADDED	8-2-30	K.D.
B	2 OF #459 STUDS & .250 HOLE ADDED; -11 CANCELED, FIG. 2, 12305, 42501 & ATTACH. REMOVED	1-10-50	
A	-12, WAS #2	11-9-49	K.D.
LET.	REVISION	DATE	BY

MODEL | PER PLANE | NEXT ASSEMBLY | SUPERSEDES | SUP. BY

THIS DRAWING IS THE PROPERTY OF THE PIPER AIRCRAFT CORP. AND ITS POSSESSION BY UNAUTHORIZED PERSONS SHALL NOT BE CONSTRUED AS PERMISSION TO COPY OR USE IN WHOLE OR IN PART, ANY DEVICES SHOWN THEREON.

PIPER AIRCRAFT CORP.
LOCK HAVEN, PENNA.

FRAME ASSEMBLY—
FRONT SEAT

C.E.K.	H.R.K.		
2-24-49	2-28-49		12267
DRAFTSMAN	CHECKER	STANDARDS	

A845

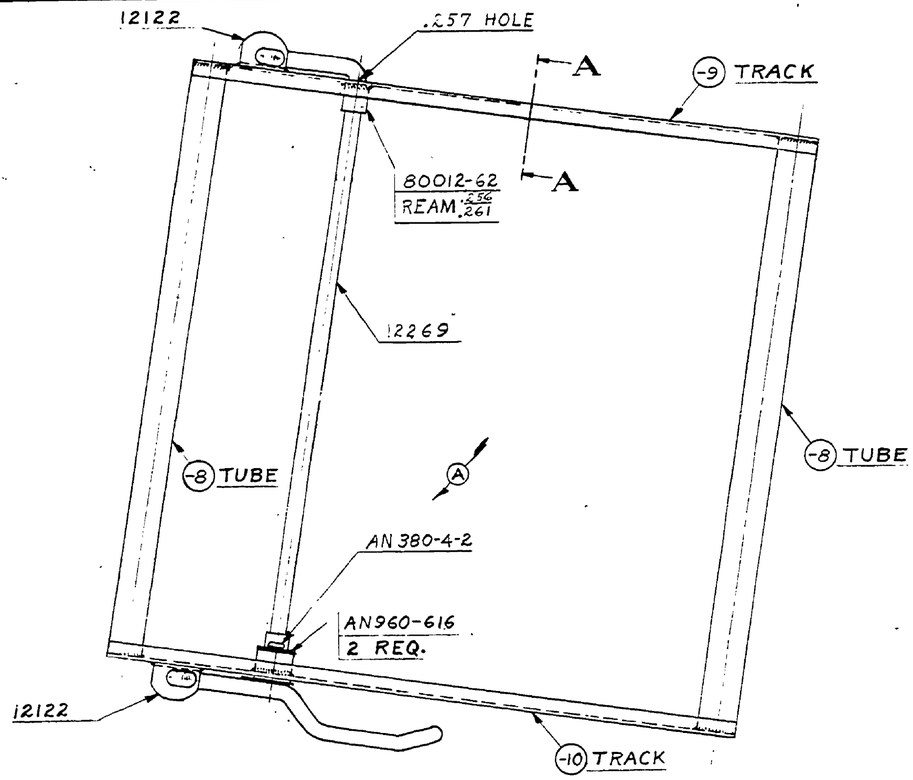

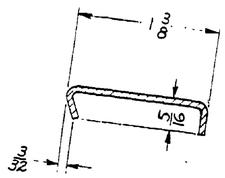

SEC. A-A
FULL SIZE

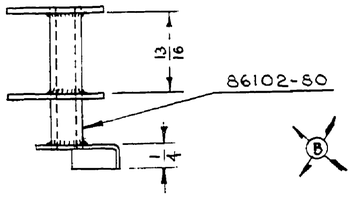

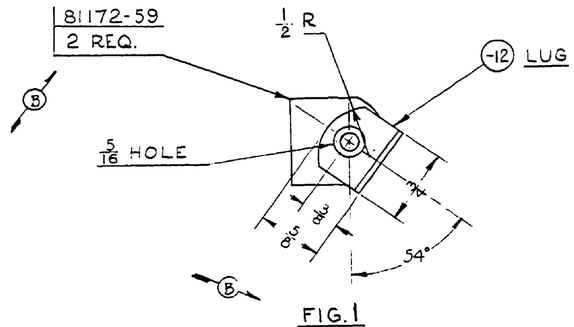

FIG. 1
-13 STOP ASSEMBLY DETAIL
FULL SIZE

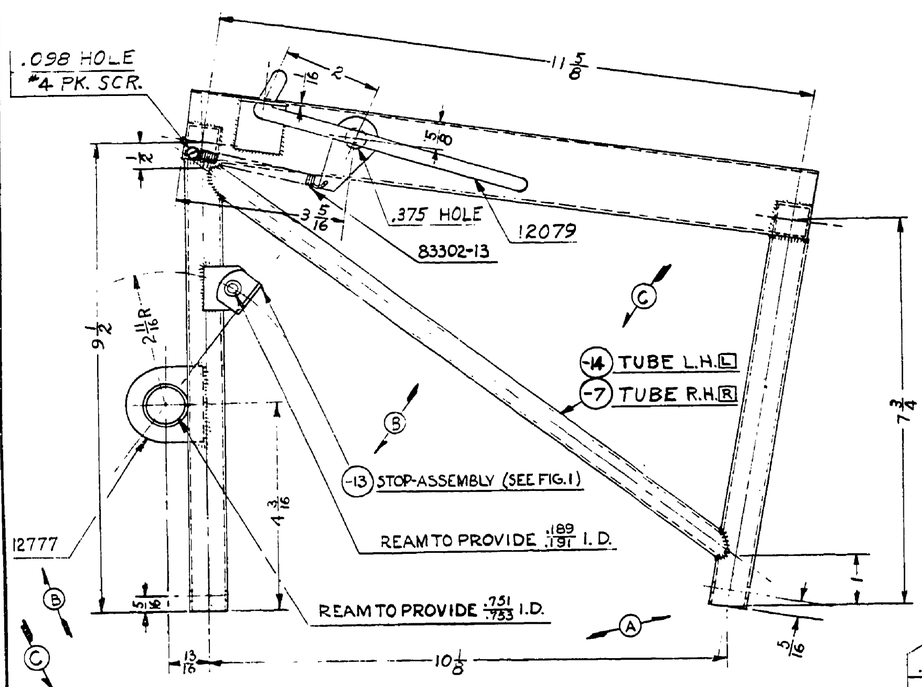

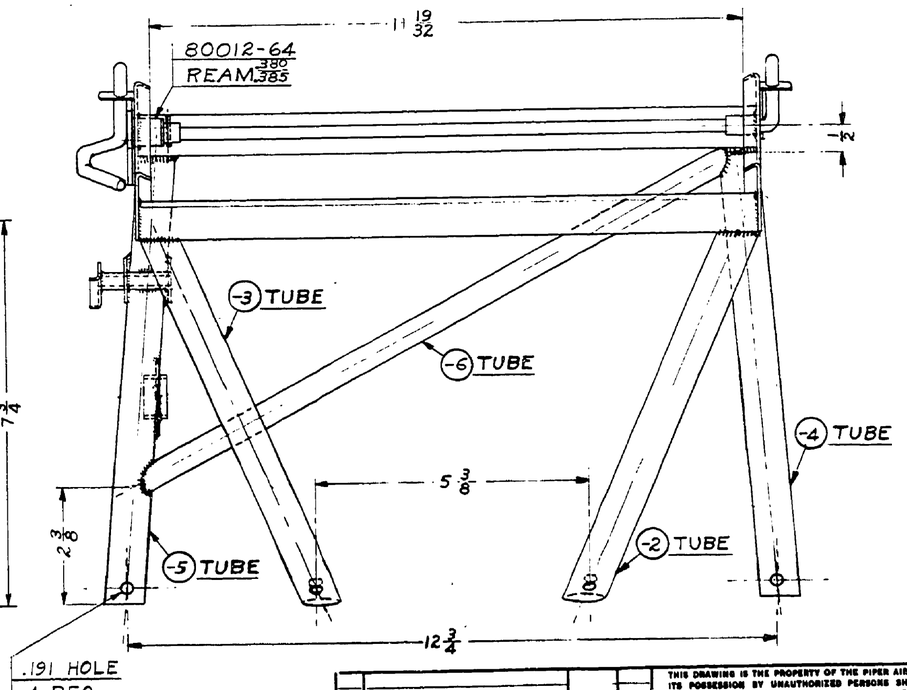

NOTE:
PARTS MARKED L USED ON LEFT SIDE ONLY.
PARTS MARKED R USED ON RIGHT SIDE ONLY.

12268 WITH -13 STOP ASSEMBLY & 12777 LUG ASSEMBLY OMITTED
-B- 12268-11 SHOWN

LET.	REVISION	DATE	BY
C	-14 & NOTE ADDED	6-5-50	C.K.
B	-11, -12, -13, 12777, 86102-80 TWO OF 81172-59 & (FIG 1 ADDED)	1-3-50	K.D.
A	BOTTOM OF -2 & -3 SHOWN CUT PERPENDICULAR TO 4 TUBE SIDE VIEW, AN960-4-2 & AN380-2-2	12-5-49	K.D.

THIS DRAWING IS THE PROPERTY OF THE PIPER AIRCRAFT CORP. AND ITS POSSESSION BY UNAUTHORIZED PERSONS SHALL NOT BE CONSTRUED AS PERMISSION TO REPRODUCE FOR SALE, IN WHOLE OR IN PART, ANY DEVICES SHOWN THEREON

MODEL	PER PLANE	NEXT ASSEMBLY	SUPERSEDES	SUP. BY

PIPER AIRCRAFT CORP.
LOCK HAVEN, PENNA.

PART NO.	NO. REQ.	SIZE	DESCRIPTION / MATERIAL
-14	1	½×.028×14	#1025 STL. TUBE
-13	1	STOP ASSY. CONSISTING OF -12 LUG, TWO OF 81172-59 LUG & 86102-80 BUSHING	
86102-80	1	BUSHING	
81172-59	2	LUG	
12777	1	FLAP LEVER LUG ASSY.	
-12	1	.062×¾×⅞	#1025 STL.
#4	1	¼ LONG	TYPE Z STOVE HD. PK. SCR.
AN960-616	2	WASHER	
AN380-4-2	1	COTTER PIN	
85551	REF.	SQ. TUBE SECTION	
83302-13	1	SPRING	
80012-64	1	BUSHING	
80012-62	1	BUSHING	
12269	1	LEVER	
12122	2	LUG	
12079	1	LEVER ASSY.	
-10	1	.062×2⅛×12 7/16	#1025 STL.
-9	1		
-8	2	12 3/32 LONG	PIPER SECTION 85551
-7	1	½×.028×14	#1025 STL. TUBE
-6	1	½×.028×13½	#1025 STL. TUBE
-5	1	¾×.035×9¼	#1025 STL. TUBE
-4	1	¾×.035×9¼	#1025 STL. TUBE
-3	1	¾×.035×8½	#1025 STL. TUBE
-2	1	¾×.035×8½	#1025 STL. TUBE

SCALE 6 IN. = 1 FT. & NOTED | TOTAL WT.—LBS.
FINISH—PIPER SPECIFICATION #10
MANUFACTURING PRACTICES—PIPER SPECIFICATION #9

BASE ASSEMBLY—
FRONT SEAT

C.E.K.	H.R.K.		12268
2-25-49	2-25-49		
DRAFTSMAN	CHECKER	STANDARDS	

A735

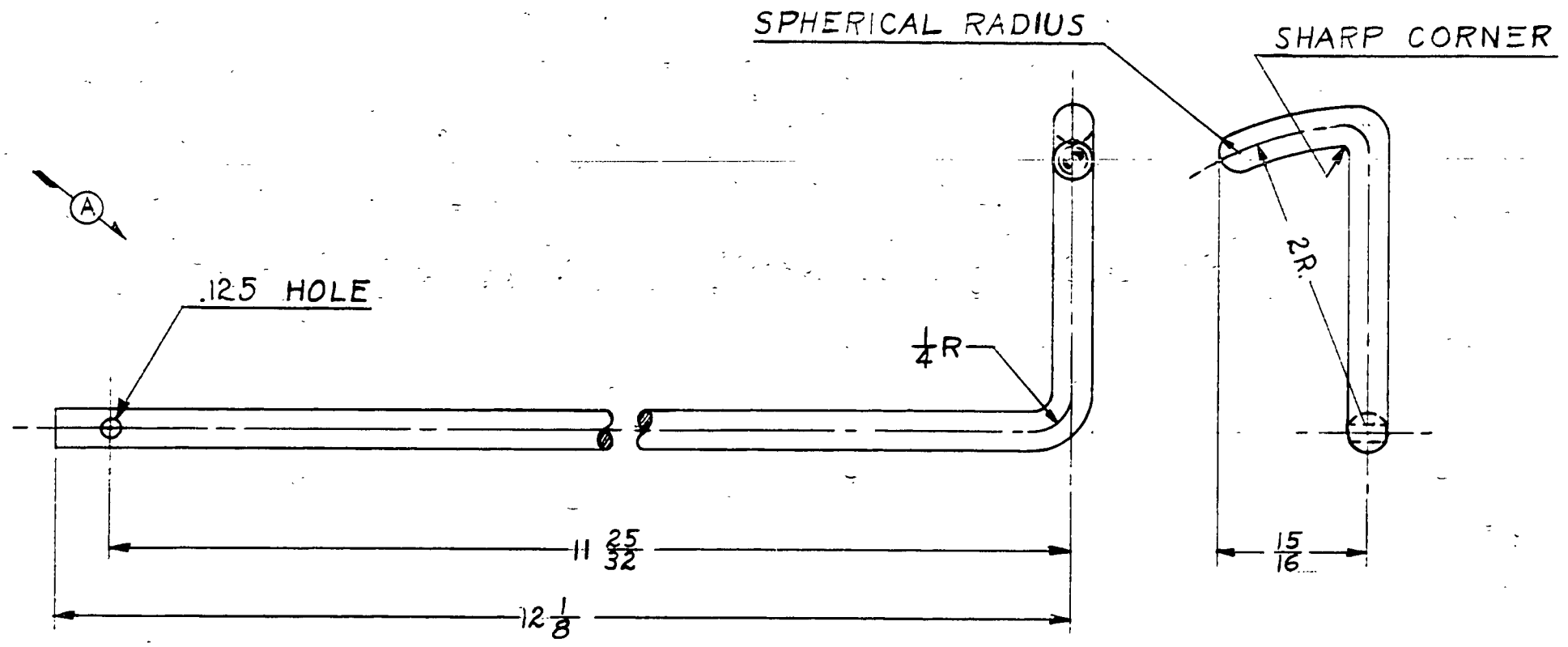
SPHERICAL RADIUS
SHARP CORNER
A
.125 HOLE
1/4R
2R.
11 25/32
12 1/8
15/16

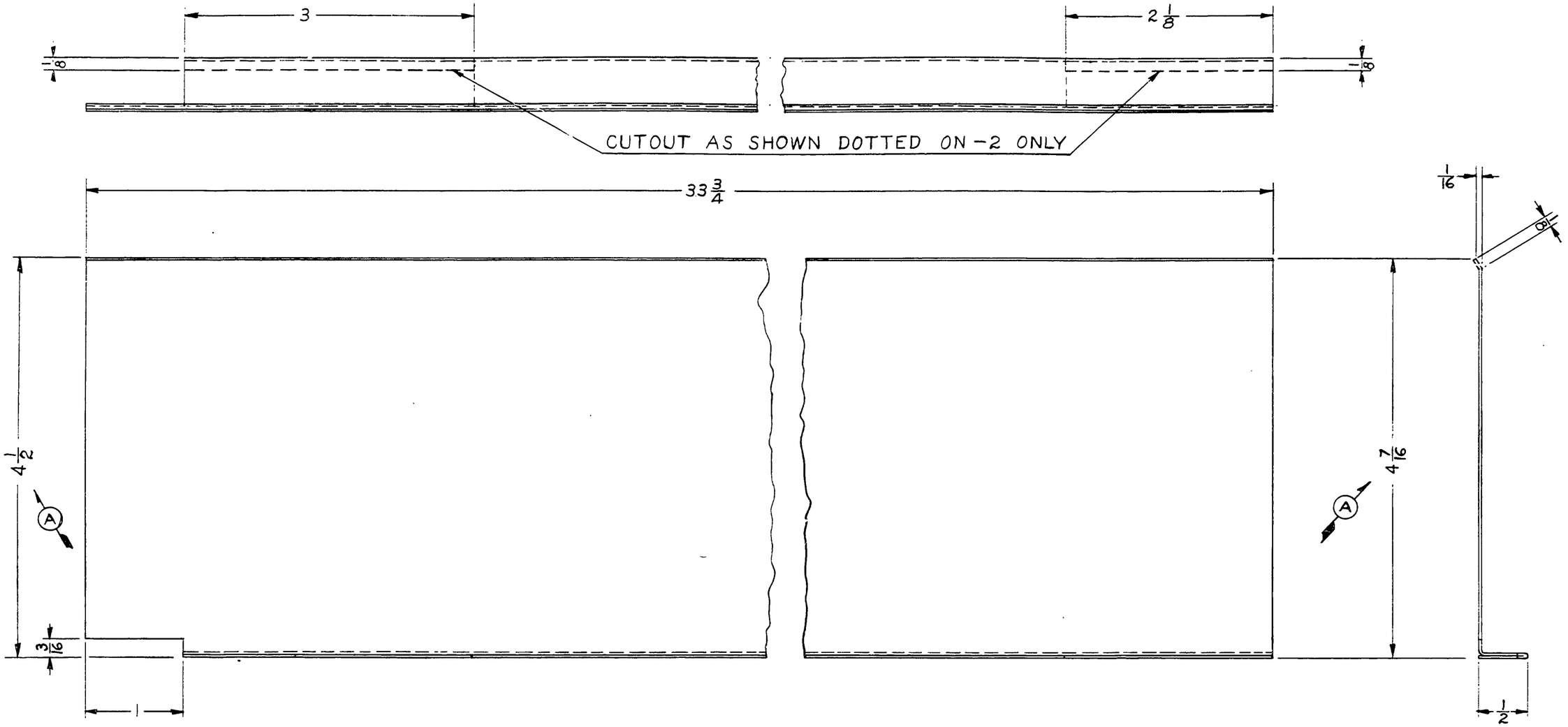

12274 SHOWN
12274-2 OPPOSITE & NOTED.

				MODEL	PER PLANE	NEXT ASSEMBLY	SUPERSEDES	SUP. BY	
A	4 3/16 WAS 4 1/4; 4 1/2 ADDED	5-17-50	C.K.						
LET.	REVISION	DATE	BY						

THIS DRAWING IS THE PROPERTY OF THE PIPER AIRCRAFT CORP. AND ITS POSSESSION BY UNAUTHORIZED PERSONS SHALL NOT BE CONSTRUED AS PERMISSION TO REPRODUCE FOR SALE, IN WHOLE OR IN PART, ANY DEVICES SHOWN THEREON.

PIPER AIRCRAFT CORP.
LOCK HAVEN, PENNA.

PART No.	No. REQ.	SIZE	MATERIAL
		.016 × 5 1/2 × 33 3/4	3S-1/2 H. ALUM.

SCALE FULL SIZE | TOTAL WT.—LBS.

FINISH—PIPER SPECIFICATION #10

MANUFACTURING PRACTICES—PIPER SPECIFICATION #9

FAIRING — LOWER WING ROOT

C.E.K.	H.R.K.		12274
3-18-49	5-21-49		
DRAFTSMAN	CHECKER	STANDARDS	

499

A499

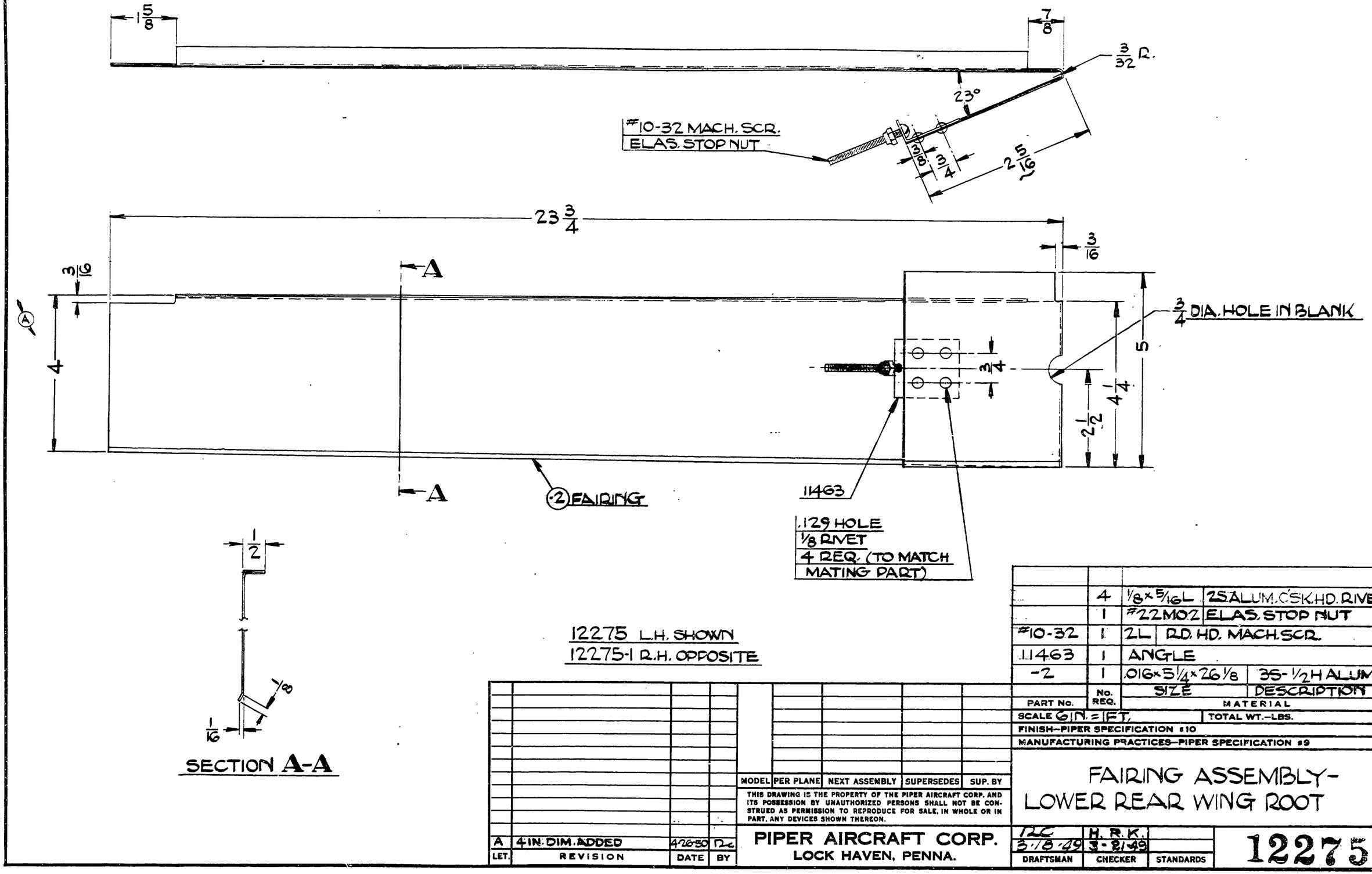

12275 L.H. SHOWN
12275-1 R.H. OPPOSITE

SECTION A-A

	4	1/8 × 5/16 L	2S ALUM. C'SK. HD. RIVET
	1	#22 MOZ	ELAS. STOP NUT
#10-32	1	2L	R.D. HD. MACH. SCR.
11463	1	ANGLE	
-2	1	.016 × 5 1/4 × 26 1/8	3S-1/2H ALUM.
PART No.	No. REQ.	SIZE	DESCRIPTION
		MATERIAL	

SCALE 6 IN. = 1 FT. | TOTAL WT.—LBS.

FINISH—PIPER SPECIFICATION #10

MANUFACTURING PRACTICES—PIPER SPECIFICATION #9

MODEL	PER PLANE	NEXT ASSEMBLY	SUPERSEDES	SUP. BY

THIS DRAWING IS THE PROPERTY OF THE PIPER AIRCRAFT CORP. AND ITS POSSESSION BY UNAUTHORIZED PERSONS SHALL NOT BE CONSTRUED AS PERMISSION TO REPRODUCE FOR SALE, IN WHOLE OR IN PART. ANY DEVICES SHOWN THEREON.

LET.	REVISION	DATE	BY
A	4 IN. DIM. ADDED	4-26-50	DC

PIPER AIRCRAFT CORP.
LOCK HAVEN, PENNA.

FAIRING ASSEMBLY-
LOWER REAR WING ROOT

DRAFTSMAN	CHECKER	STANDARDS
DC 3-18-49	H.R.K. 3-21-49	

12275

A 500

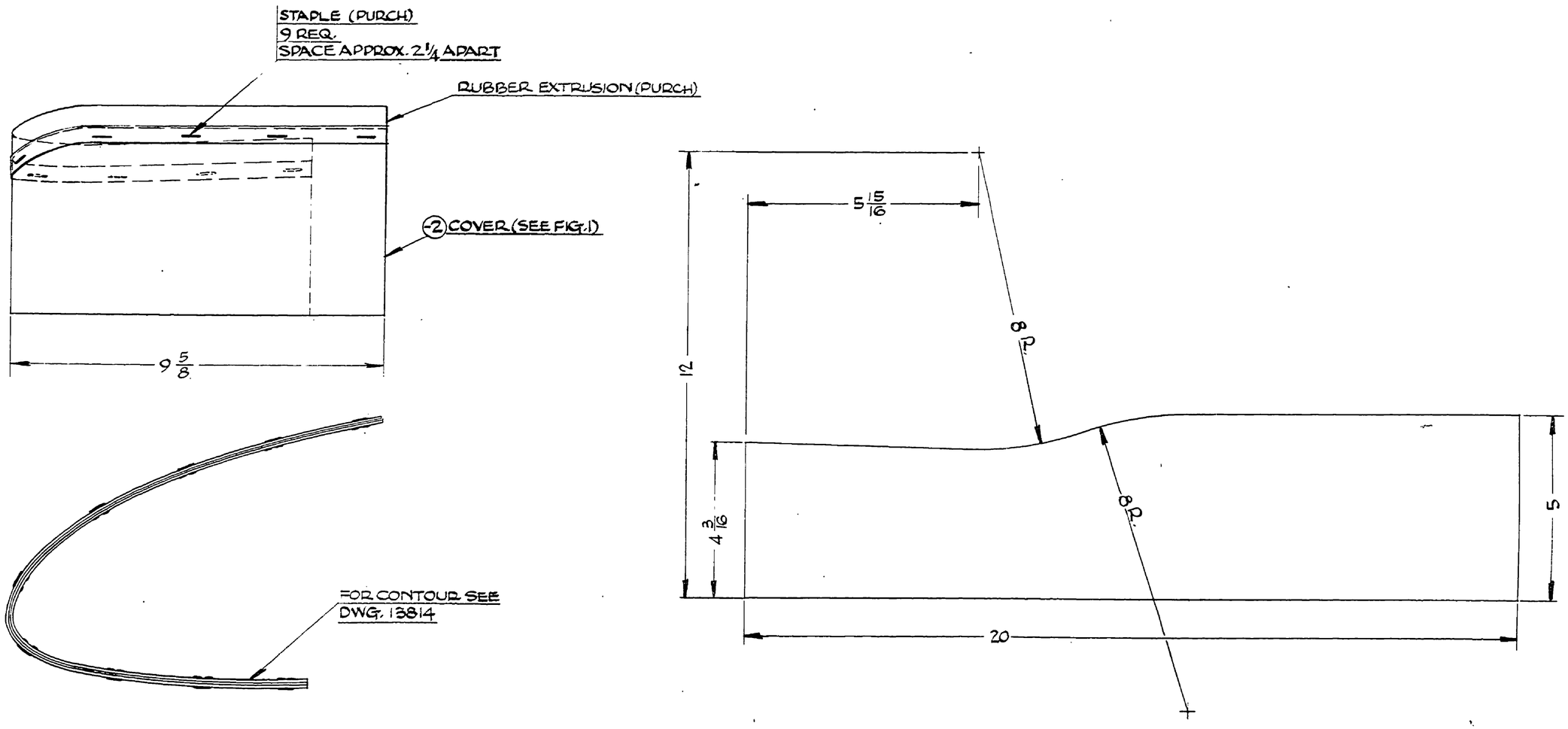

FIG. 1
-2 FLAT PATTERN DETAIL

12276 L.H. SHOWN
12276-1 R.H. OPPOSITE

PART No.	No. REQ.	MATERIAL	
	9	BOSTICH RUST RESISTANT STAPLE TYPE SCCR 25 3/8	
	1	20 1/2 L.	RUBBER EXTRUSION #1796A PURCH. MIAMI RUBBER CO.
13814	REF.	WING FULL RIB OUTLINE	
-2	1	.032×5×20	3S-1/2H ALUM
		SIZE	DESCRIPTION

SCALE 6 IN = 1 FT — TOTAL WT.—LBS.

FINISH—PIPER SPECIFICATION #10

MANUFACTURING PRACTICES—PIPER SPECIFICATION #9

FAIRING ASSEMBLY—FRONT WING ROOT

THIS DRAWING IS THE PROPERTY OF THE PIPER AIRCRAFT CORP. AND ITS POSSESSION BY UNAUTHORIZED PERSONS SHALL NOT BE CONSTRUED AS PERMISSION TO REPRODUCE FOR SALE, IN WHOLE OR IN PART, ANY DEVICES SHOWN THEREON

LET.	REVISION	DATE	BY

MODEL	PER PLANE	NEXT ASSEMBLY	SUPERSEDES	SUP. BY

PIPER AIRCRAFT CORP.
LOCK HAVEN, PENNA.

DRAFTSMAN	CHECKER	STANDARDS
RC 3-21-49	H.R.K. 3-22-49	

12276

A736

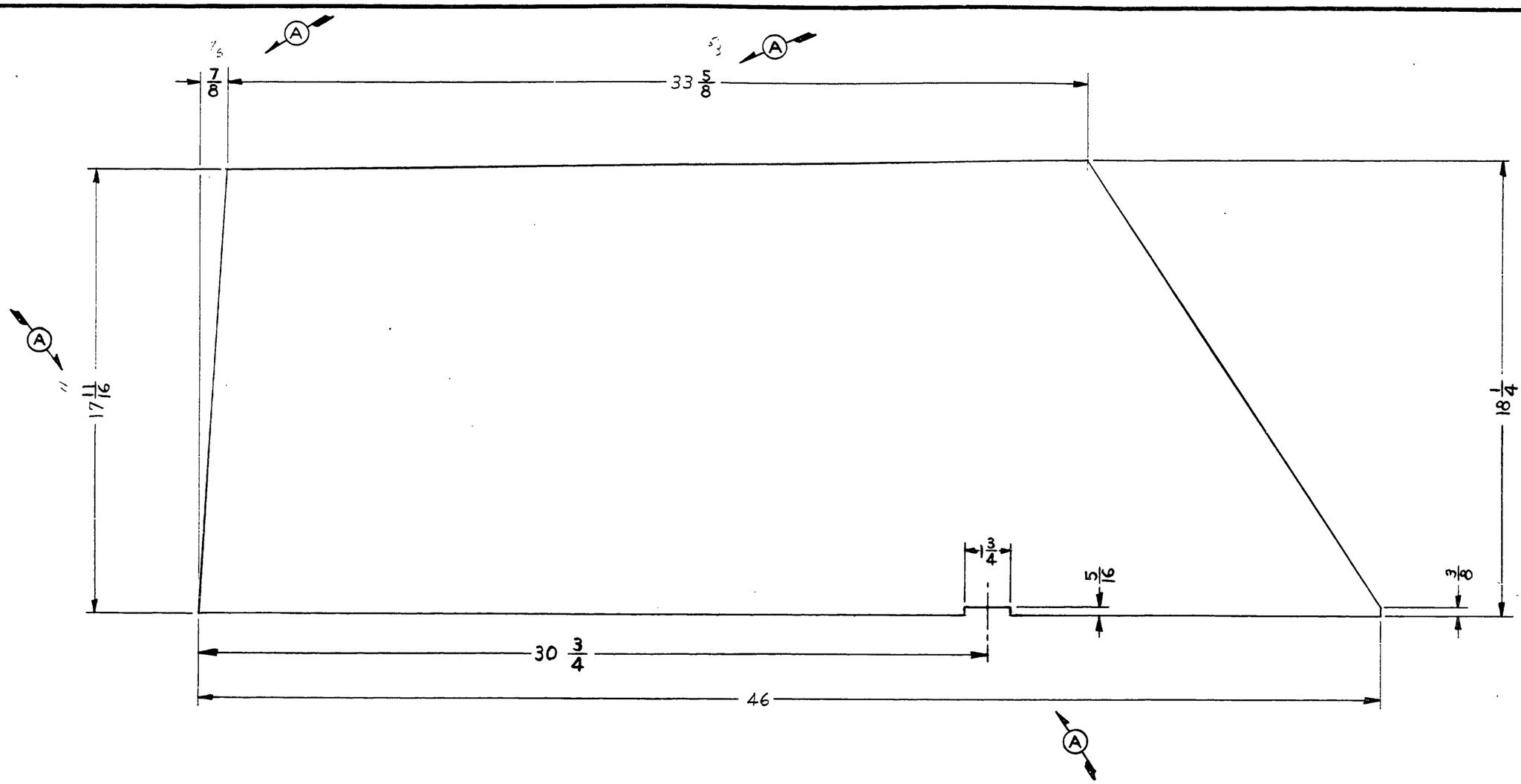

										.080×18¼×46	PLEXIGLAS
									PART No.	No. REQ.	SIZE / MATERIAL / DESCRIPTION
									SCALE 3 IN. = 1 FT.		TOTAL WT.—LBS.
									FINISH—PIPER SPECIFICATION #10		
									MANUFACTURING PRACTICES—PIPER SPECIFICATION #9		
									WINDOW— ENCLOSURE DOOR		
				MODEL	PER PLANE	NEXT ASSEMBLY	SUPERSEDES	SUP. BY			
				THIS DRAWING IS THE PROPERTY OF THE PIPER AIRCRAFT CORP. AND ITS POSSESSION BY UNAUTHORIZED PERSONS SHALL NOT BE CONSTRUED AS PERMISSION TO REPRODUCE FOR SALE, IN WHOLE OR IN PART, ANY DEVICES SHOWN THEREON.						
A	NOTCH ADDED; 7/8 WAS 1 1/16; 33 5/8 WAS 33 3/16; 17 11/16 WAS 17 15/16	5-25-50	C.K.	PIPER AIRCRAFT CORP. LOCK HAVEN, PENNA.					C. E. K. 3-1-49	H. R. K. 3-9-49	12279
LET.	REVISION	DATE	BY						DRAFTSMAN	CHECKER	STANDARDS

501

A 501

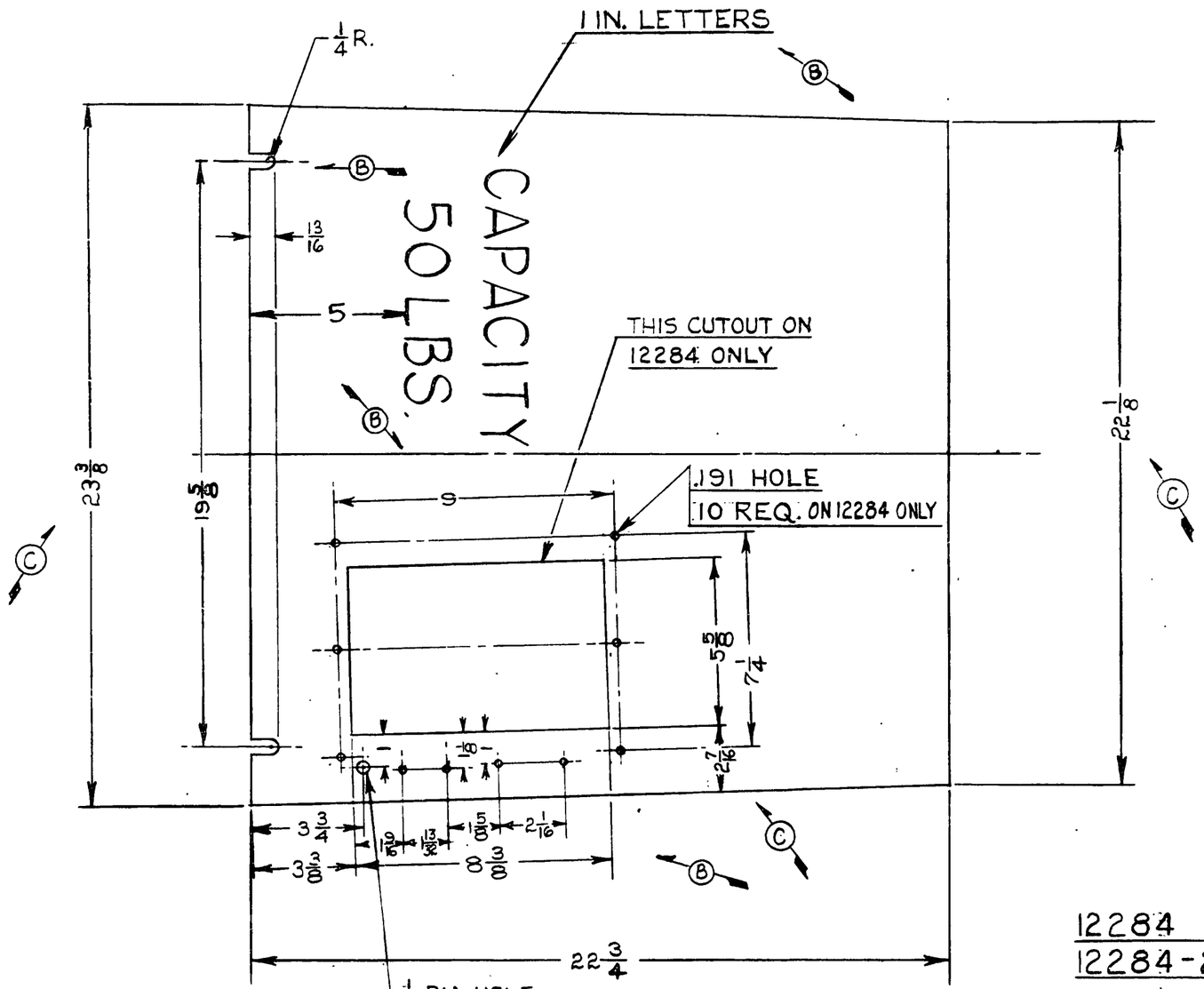

12284 SHOWN

12284-2 WITH HOLES & CUT-OUT OMITTED AS NOTED

LET.	REVISION	DATE	BY
C	2 7/16 WAS 2 1/4; 22 1/8 WAS 22 1/4; 23 3/8 WAS 23 1/4; 9 WAS 9 1/2; 2 1/16 WAS 2 1/4; 11 IN. LET.	4-10-50	C.K.
B	WAS 1 1/2 LET. 5/16 HOLES REM, SLOTS ADD.	11-11-49	R.R.
A	-2 ADDED	9-26-49	R.R.

MODEL	PER PLANE	NEXT ASSEMBLY	SUPERSEDES	SUP. BY

THIS DRAWING IS THE PROPERTY OF THE PIPER AIRCRAFT CORP. AND ITS POSSESSION BY UNAUTHORIZED PERSONS SHALL NOT BE CONSTRUED AS PERMISSION TO REPRODUCE FOR SALE, IN WHOLE OR IN PART, ANY DEVICES SHOWN THEREON.

PIPER AIRCRAFT CORP.
LOCK HAVEN, PENNA.

PART No.	No. REQ.	SIZE	DESCRIPTION
		1/4 × 22 3/4 × 23 1/2	3 PLY FIR PLYWOOD

MATERIAL

SCALE 3 IN = 1 FT. — TOTAL WT.—LBS.

FINISH—PIPER SPECIFICATION #10

MANUFACTURING PRACTICES—PIPER SPECIFICATION #9

PANEL – BAGGAGE COMPARTMENT LOWER

R.T.M.	H.R.K.		
3-7-49	3-8-49		12284
DRAFTSMAN	CHECKER	STANDARDS	

502

A 502

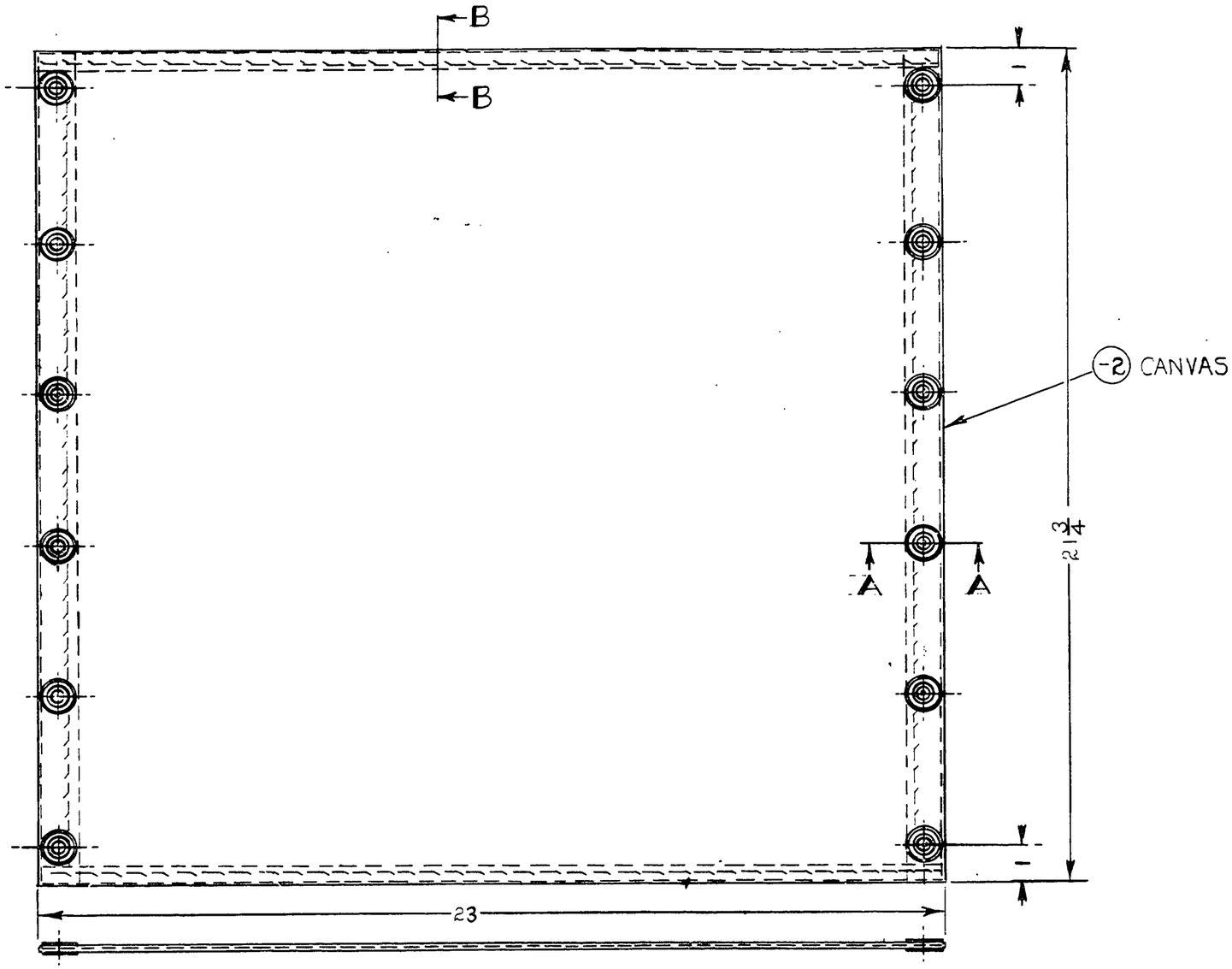

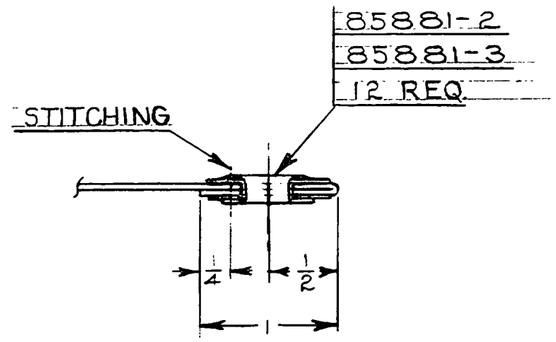

SECTION A-A
FULL SIZE

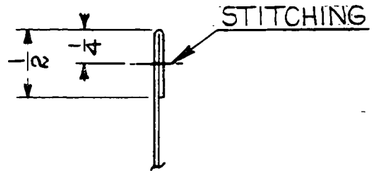

SECTION B-B
FULL SIZE

PART No.	No. REQ.	SIZE	DESCRIPTION MATERIAL
	1	8 YDS.	20-4 SILK FIN. BLACK THD.
85881-3	12	WASHER	
85881-2	12	GROMMET	
-2	1	22 3/4 x 25	12 OZ. CANVAS

SCALE 4 IN = 1 FT + NOTED | TOTAL WT.-LBS.

FINISH—PIPER SPECIFICATION #10

MANUFACTURING PRACTICES—PIPER SPECIFICATION #9

CANVAS ASSEMBLY-REAR SEAT BOTTOM

LET.	REVISION	DATE	BY

MODEL	PER PLANE	NEXT ASSEMBLY	SUPERSEDES	SUP. BY

THIS DRAWING IS THE PROPERTY OF THE PIPER AIRCRAFT CORP. AND ITS POSSESSION BY UNAUTHORIZED PERSONS SHALL NOT BE CONSTRUED AS PERMISSION TO REPRODUCE FOR SALE, IN WHOLE OR IN PART, ANY DEVICES SHOWN THEREON.

PIPER AIRCRAFT CORP.
LOCK HAVEN, PENNA.

DRAFTSMAN	CHECKER	STANDARDS
R T M 3-16-49	H.R.K. 3-18-49	

12286

503

A 503

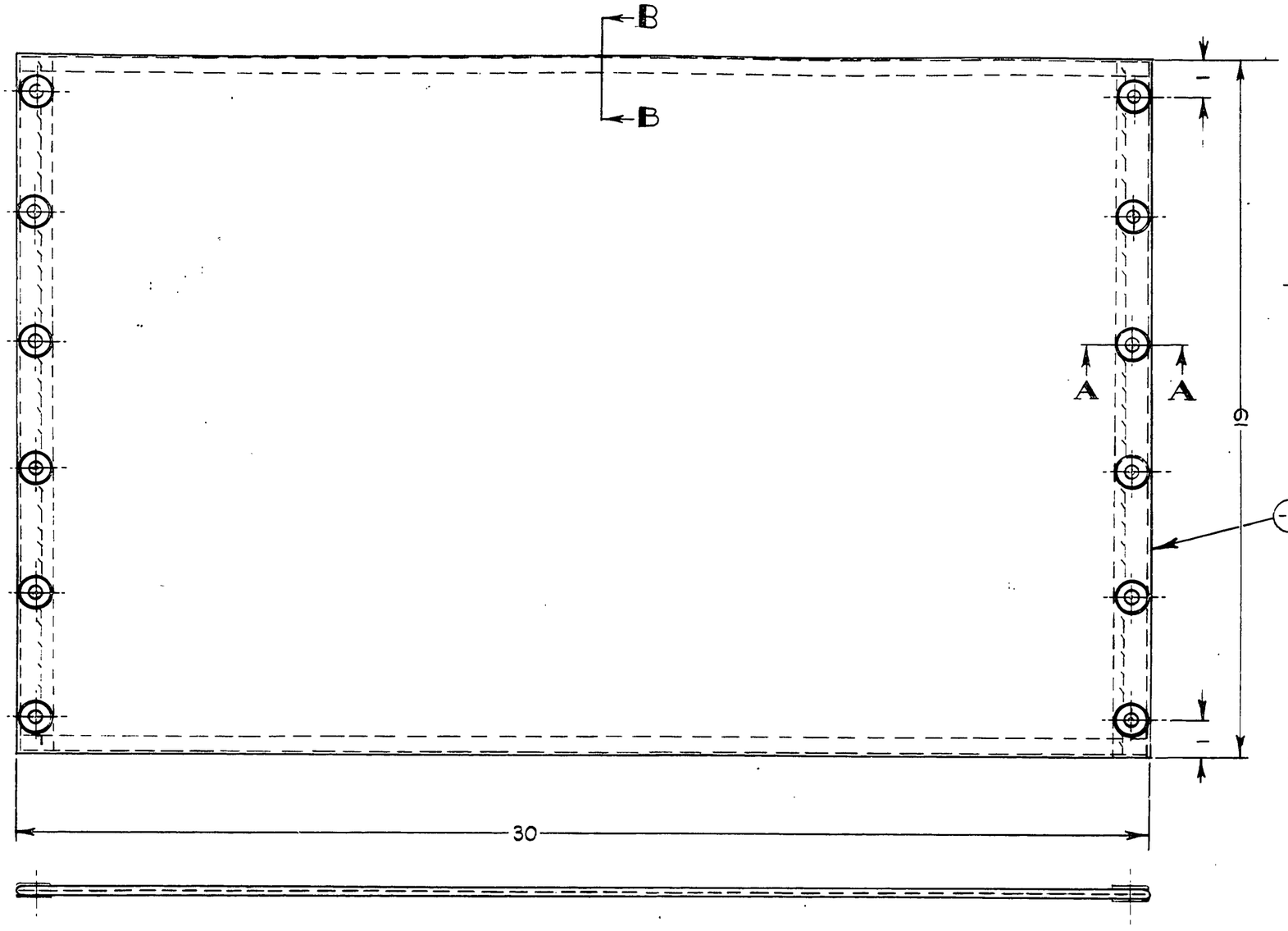

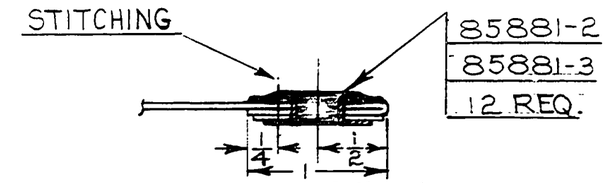

SECTION A-A
FULL SIZE

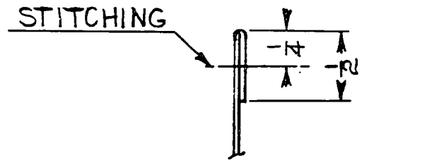

SECTION B-B
FULL SIZE

-2 CANVAS

PART No.	No. REQ.	SIZE	MATERIAL
	1	9 YDS.	20-4 SILK FIN. BLACK THD.
85881-3	12	WASHER	
85881-2	12	GROMMET	
-2	1	20×32	12 OZ. CANVAS

SCALE 4 IN = 1 FT | TOTAL WT.—LBS.

FINISH—PIPER SPECIFICATION #10

MANUFACTURING PRACTICES—PIPER SPECIFICATION #9

LET.	REVISION	DATE	BY

MODEL	PER PLANE	NEXT ASSEMBLY	SUPERSEDES	SUP. BY

THIS DRAWING IS THE PROPERTY OF THE PIPER AIRCRAFT CORP. AND ITS POSSESSION BY UNAUTHORIZED PERSONS SHALL NOT BE CONSTRUED AS PERMISSION TO REPRODUCE FOR SALE, IN WHOLE OR IN PART, ANY DEVICES SHOWN THEREON.

PIPER AIRCRAFT CORP.
LOCK HAVEN, PENNA.

CANVAS ASSEMBLY-REAR SEAT BACK

R. T. M.	H. R. K.		
3-16-49	3-18-49		
DRAFTSMAN	CHECKER	STANDARDS	

12287

504

A 504

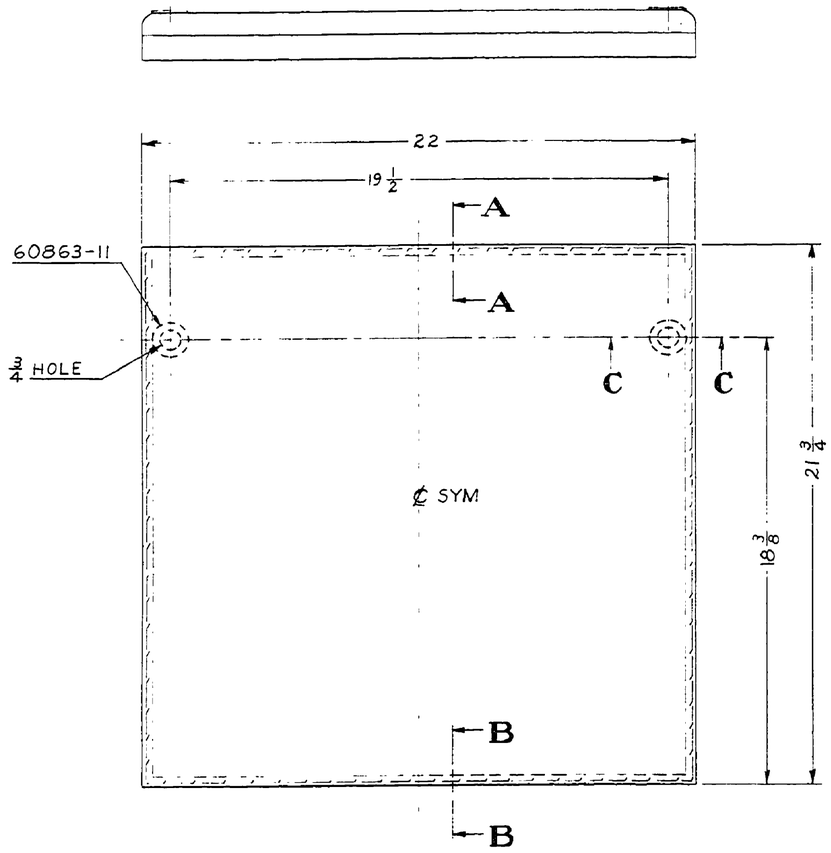

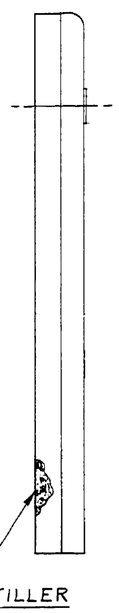

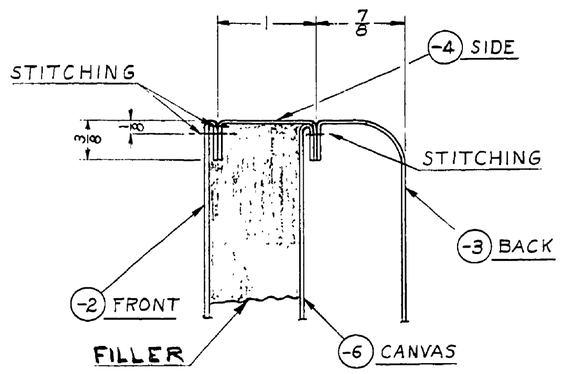

SECTION A–A
FULL SIZE

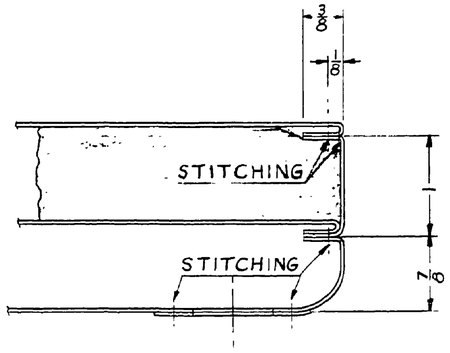

SECTION C–C
FULL SIZE

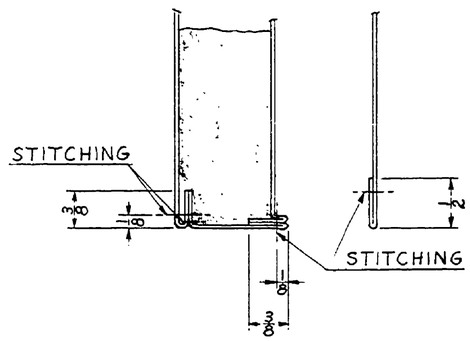

SECTION B–B
FULL SIZE

	1	24 YDS.	#16-4 MAROON THREAD
60863-11	2	REINFORCEMENT	
-6	1	22½×22¾	8 OZ. CANVAS
-5	1	21¾×22	RUBBERIZED WOOL MED. DENSITY 1×36" PURCH.
-4	1	1¾×88¼	
-3	1	23½×24½	2240F-TG-119-RT-54
-2	1	22½×22¾	ANTIQUE TAN NAUGAHYDE
PART NO.	NO. REQ.	SIZE	DESCRIPTION MATERIAL

SCALE 3 IN.=1 FT. & NOTED — TOTAL WT.–LBS.

FINISH–PIPER SPECIFICATION #10

MANUFACTURING PRACTICES–PIPER SPECIFICATION #9

CUSHION ASSEMBLY–
REAR SEAT BACK

LET.	REVISION	DATE	BY
B	THD. SPEC. REV.	1-23-51	M.G.
A	FILLER MATERIAL CHANGED	12-8-49	K.D.

THIS DRAWING IS THE PROPERTY OF THE PIPER AIRCRAFT CORP. AND ITS POSSESSION BY UNAUTHORIZED PERSONS SHALL NOT BE CONSTRUED AS PERMISSION TO REPRODUCE FOR SALE, IN WHOLE OR IN PART, ANY DEVICES SHOWN THEREON

MODEL	PER PLANE	NEXT ASSEMBLY	SUPERSEDES	SUP. BY

PIPER AIRCRAFT CORP.
LOCK HAVEN, PENNA.

C.E.K.	H.R.K.		
3-18-49	3-21-49		
DRAFTSMAN	CHECKER	STANDARDS	12289

A737

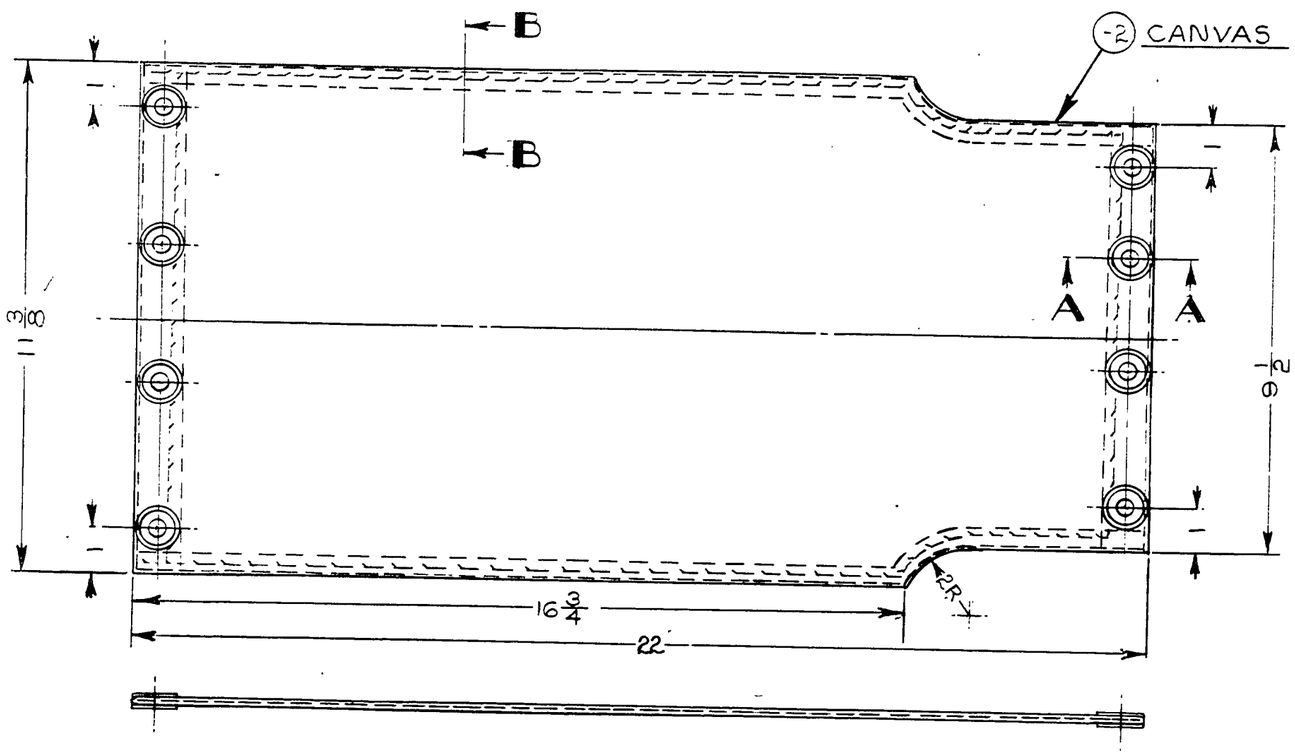

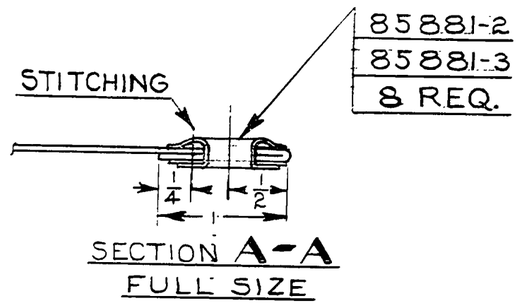

SECTION A-A
FULL SIZE

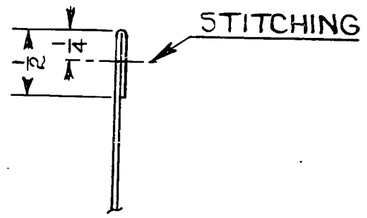

SECTION B-B
FULL SIZE

PART No.	No. REQ.	MATERIAL	
	1	6 YD. L #20-4 SILK FIN. BLACK THD	
85881-3	8	WASHER	
85881-2	8	GROMMET	
-2	1	12 3/8 × 24	12 OZ. CANVAS
		SIZE	DESCRIPTION

SCALE 4 IN = 1 FT + NOTED | TOTAL WT.–LBS.

FINISH–PIPER SPECIFICATION #10

MANUFACTURING PRACTICES–PIPER SPECIFICATION #9

CANVAS ASSEMBLY-FRONT SEAT

LET.	REVISION	DATE	BY

MODEL	PER PLANE	NEXT ASSEMBLY	SUPERSEDES	SUP. BY

THIS DRAWING IS THE PROPERTY OF THE PIPER AIRCRAFT CORP. AND ITS POSSESSION BY UNAUTHORIZED PERSONS SHALL NOT BE CONSTRUED AS PERMISSION TO REPRODUCE FOR SALE, IN WHOLE OR IN PART. ANY DEVICES SHOWN THEREON.

PIPER AIRCRAFT CORP.
LOCK HAVEN, PENNA.

DRAFTSMAN	CHECKER	STANDARDS	
R.T.M. 3-17-49	H.R.K. 3-18-49		12290

505

A 505

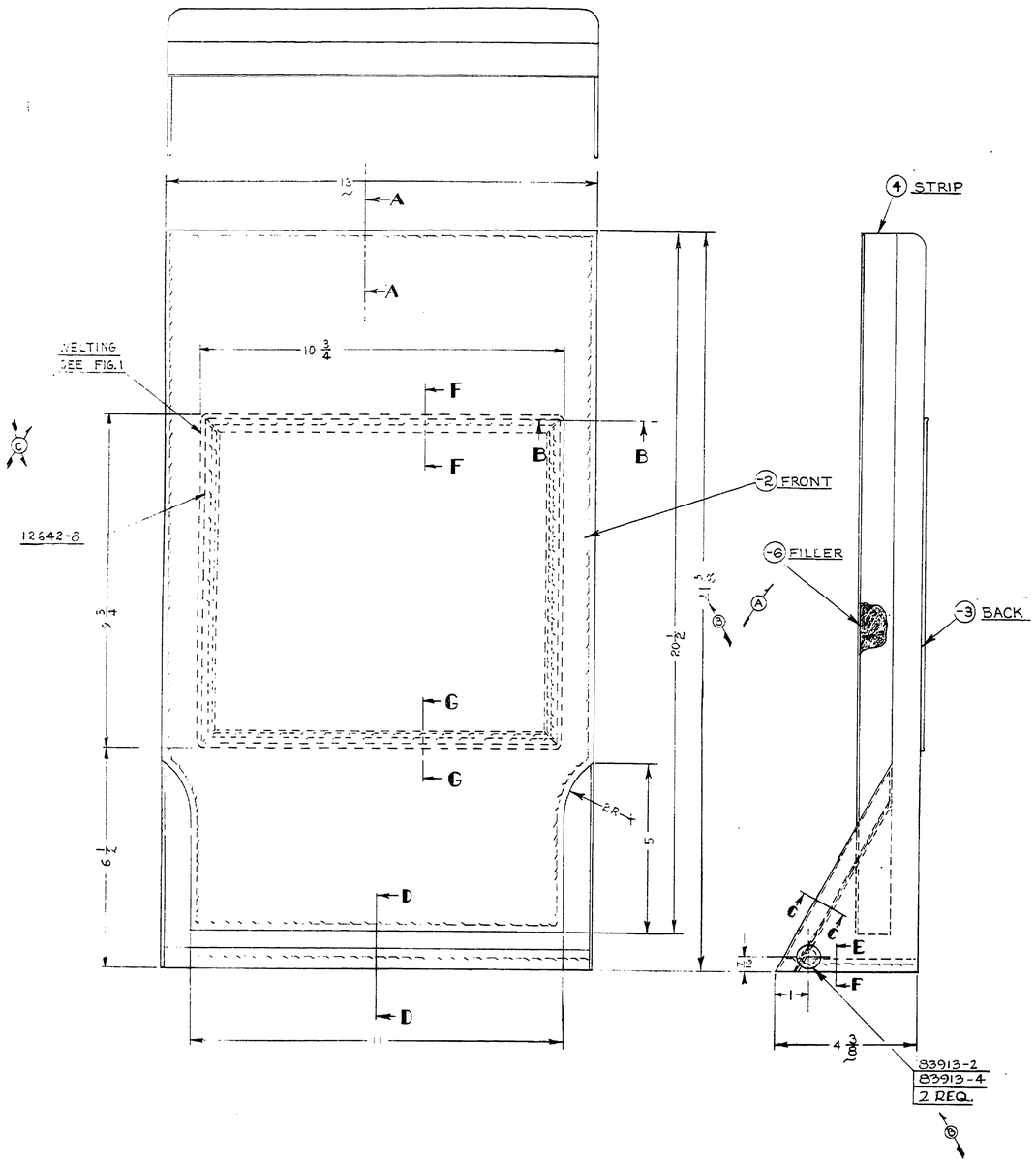

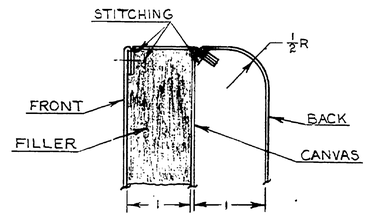

SECTION A-A
FULL SIZE

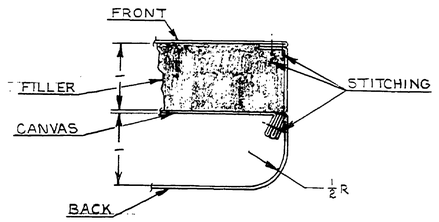

SECTION B-B
FULL SIZE

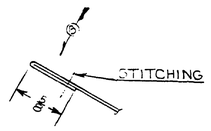

SECTION C-C
FULL SIZE

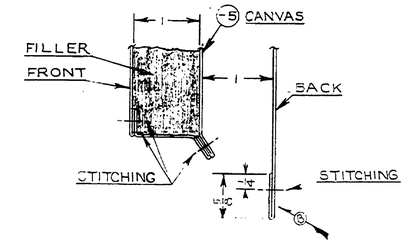

SECTION D-D
FULL SIZE

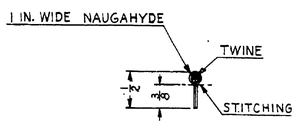

FIG. 1
WELTING DETAIL
FULL SIZE

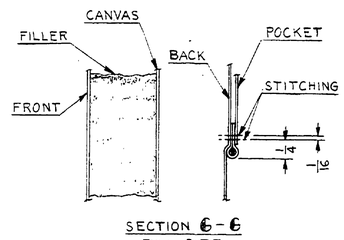

SECTION G-G
FULL SIZE

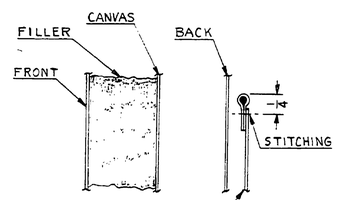

SECTION F-F
FULL SIZE



SECTION E-E
FULL SIZE

NOTE
1 UNLESS OTHERWISE NOTED ALL OVERLAPS ARE 3/8 INCH.

PART NO.	No. REQ.	SIZE	DESCRIPTION MATERIAL
12642-8	1		POCKET
	1	1+41	2240F-TG-119-RT-54 ANTIQUE TAN NAUGAHYDE
83913-2	2		DURABLE DOT BUTTON
83913-4	2		DURABLE DOT SOCKET
	1	26 YDS. L.F.	16-3 MAROON THREAD
-8	1	.010" x 7 1/4" x 12"	SPONGE RUBBER ADHESIVE BACK
-7	2	.020" x 7 1/4" x 7 1/8"	SPONGE RUBBER ADHESIVE BACK
-6	1	13 x 20 1/2	RUBBERIZED WOOL MED. DENSITY 54"x36" PURCH.
-5		13 3/4 x 21 1/2	8 OZ CANVAS
-4	1	2 x 70	2241F-TG-119-RT-54 ANTIQUE TAN NAUGAHYDE
-3	1	23 x 25	
-2	1	13 3/4 x 21 1/2	

SCALE 6 IN = 1 FT UNLESS NOTED | TOTAL WT.—LBS.
FINISH—PIPER SPECIFICATION #10
MANUFACTURING PRACTICES—PIPER SPECIFICATION #9

CUSHION ASSEMBLY— FRONT SEAT BACK

LET.	REVISION	DATE	BY
D	THREAD SPEC REV.	1-23-51	M.G.
C	12642-8 & WELTING ADDED	11-20-50	C.K.
B	83913-2 & 83913-4 ADDED	4-11-50	M.G.
A	FILLER MATERIAL CHANGED	12-8-49	K.D.

MODEL | PER PLANE | NEXT ASSEMBLY | SUPERSEDES | SUP. BY

THIS DRAWING IS THE PROPERTY OF THE PIPER AIRCRAFT CORP. AND ITS POSSESSION BY UNAUTHORIZED PERSONS SHALL NOT BE CONSTRUED AS PERMISSION TO REPRODUCE OR SALE, IN WHOLE OR IN PART, ANY DEVICES SHOWN THEREON.

PIPER AIRCRAFT CORP.
LOCK HAVEN, PENNA.

DRAFTSMAN	CHECKER	STANDARDS
R.T.M. 2-18-49	H.R.K. 3-16-49	

12293

A846

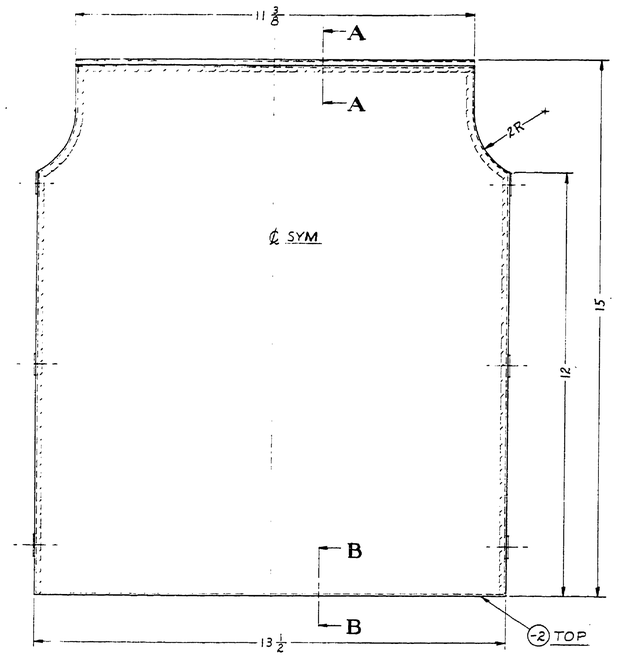

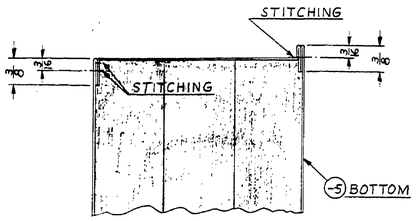

SECTION **A-A**
FULL SIZE

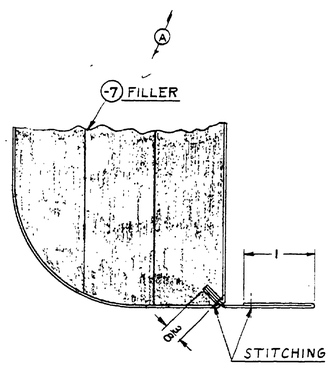

SECTION **B-B**
FULL SIZE

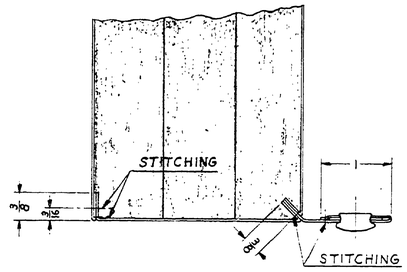

SECTION **C-C**
FULL SIZE

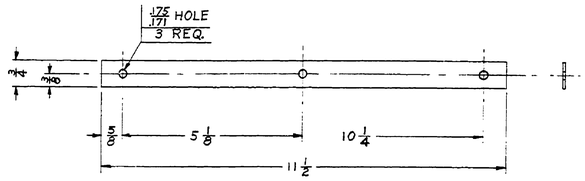

-6 DETAIL

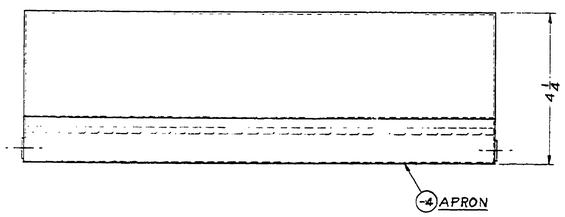

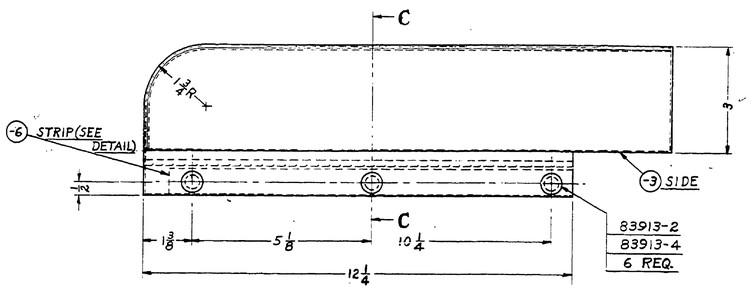

	1	18 YDS.	#16-4 MAROON THREAD
83913-4	6	DURABLE DOT SOCKET	
83913-2	6	DURABLE DOT BUTTON	
-7	3	.13½×15	RUBBERIZED WOOL MED. DENSITY 1×36" PURCH.
-6	2	.020×¾×11½	3S-½ H. ALUM.
-5	1	14¼×15¾	8 OZ. CANVAS
-4	1	2⅝×38¾	2240F-T6-119-RT-54" ANTIQUE TAN NAUGAHYDE
-3	1	4×45	
-2	1	14¼×19	
PART No.	No. REQ.	SIZE	DESCRIPTION
			MATERIAL

SCALE 6 IN. = 1 FT. & NOTED — TOTAL WT.—LBS.
FINISH—PIPER SPECIFICATION #10
MANUFACTURING PRACTICES—PIPER SPECIFICATION #9

LET.	REVISION	DATE	BY
B	THREAD SPEC. REV.	1-23-51	M.G.
A	FILLER MATERIAL CHANGED	12-8-49	K.D.

MODEL | PER PLANE | NEXT ASSEMBLY | SUPERSEDES | SUP. BY

THIS DRAWING IS THE PROPERTY OF THE PIPER AIRCRAFT CORP. BY PERMISSION BY UNAUTHORIZED PERSONS SHALL NOT BE CONSTRUED AS PERMISSION TO REPRODUCE FOR SALE, IN WHOLE OR IN PART, ANY DEVICES SHOWN THEREON.

PIPER AIRCRAFT CORP.
LOCK HAVEN, PENNA.

CUSHION ASSEMBLY-
FRONT SEAT BOTTOM

C. E. K.	H. R. K.		
3-17-49	3-18-49		12294
DRAFTSMAN	CHECKER	STANDARDS	

PHILADELPHIA BLUE PRINT CO.

A847

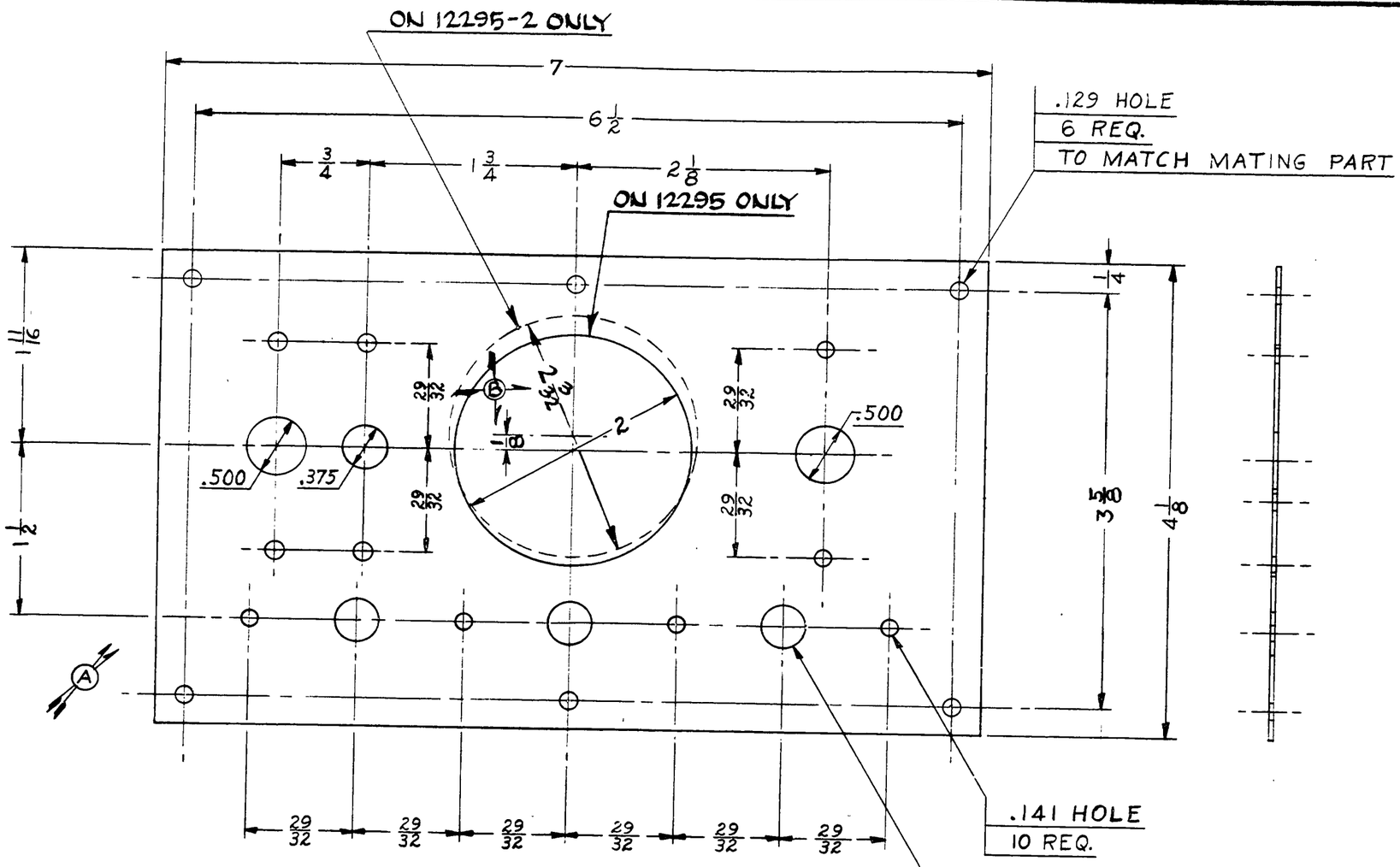

12295 SHOWN & NOTED

(B) 12295-2 WITH HOLE SHOWN DOTTED AS NOTED

LET.	REVISION	DATE	BY
B	-2 ADDED	1-25-51	MG
A	.375 HOLE & 2 OF .141 HOLES ADDED .500 & 2 OF .141 HOLES RELOCATED	3-16-49	CEK

MODEL	PER PLANE	NEXT ASSEMBLY	SUPERSEDES	SUP. BY

THIS DRAWING IS THE PROPERTY OF THE PIPER AIRCRAFT CORP. AND ITS POSSESSION BY UNAUTHORIZED PERSONS SHALL NOT BE CONSTRUED AS PERMISSION TO REPRODUCE FOR SALE, IN WHOLE OR IN PART, ANY DEVICES SHOWN THEREON.

PIPER AIRCRAFT CORP.
LOCK HAVEN, PENNA.

PART No.	No. REQ.	SIZE	MATERIAL
		.025 · 4 1/8 · 7	3S-1/2H ALUM.

SCALE FULL SIZE | TOTAL WT.-LBS.

FINISH—PIPER SPECIFICATION #10

MANUFACTURING PRACTICES—PIPER SPECIFICATION #9

PANEL - SWITCH

DRAFTSMAN	CHECKER	STANDARDS
C.E.K. 3-3-49	H.R.K. 3-4-49	

12295

506

A 506

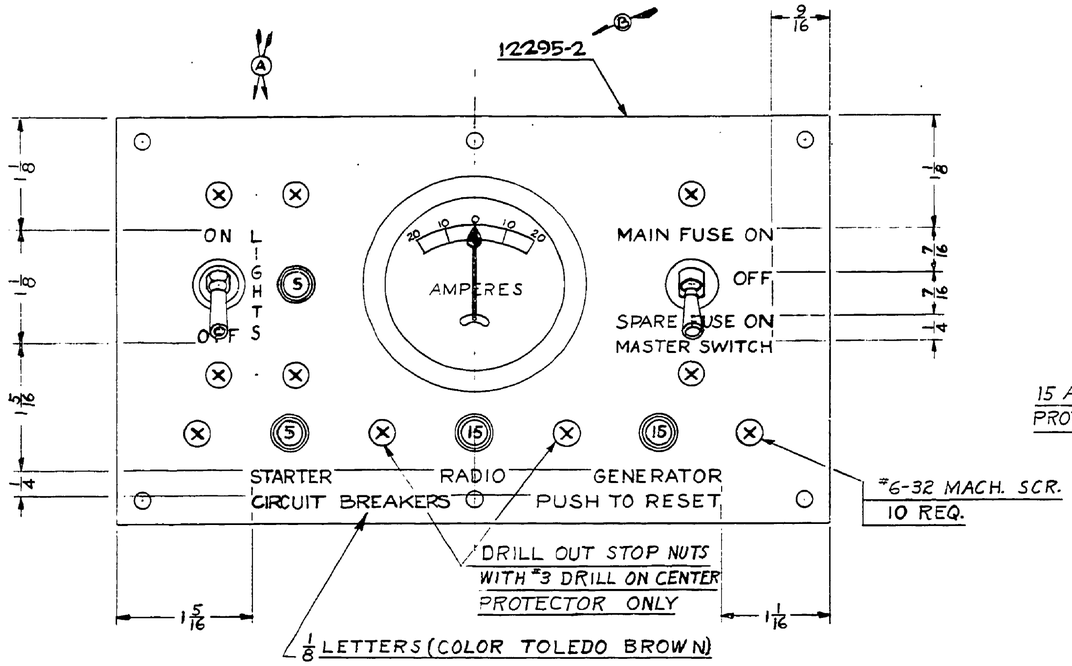

FRONT VIEW

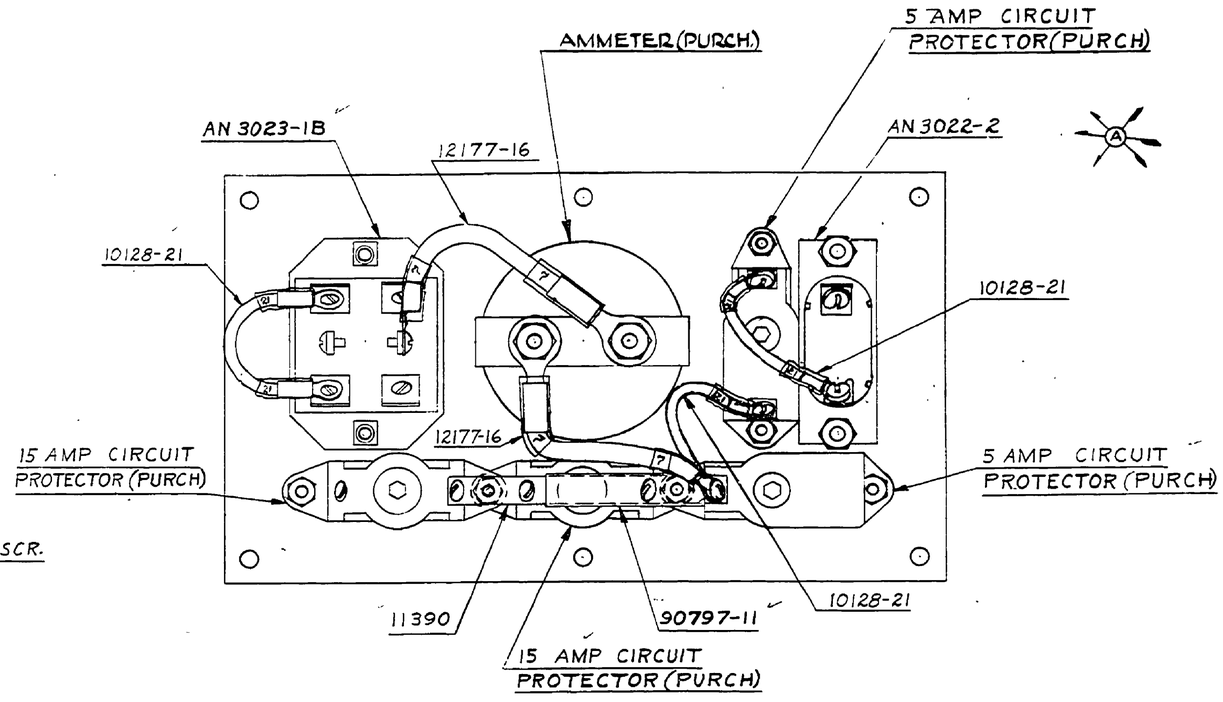

REAR VIEW

	1	AMMETER (STEWART WARNER)	
	2	TYPE PSM15	CIRCUIT PROTECTOR PURCH.
	2	TYPE PSM5	SPENCER THERMOSTAT CO.
*6-32	10	3/8 L	RD. HD. MACH. SCR.
AN3023-1B	1	SWITCH	
AN3022-2	1	SWITCH	
90797-11	1	SLEEVE	
12295-2	1	PANEL	
12177-16	2	WIRE ASSY.	
11390	1	JUMPER	
10128-21	3	WIRE ASSY.	
PART NO.	NO. REQ.	SIZE / MATERIAL	DESCRIPTION

SCALE FULL SIZE — TOTAL WT.—LBS.

FINISH—PIPER SPECIFICATION #10

MANUFACTURING PRACTICES—PIPER SPECIFICATION #9

THIS DRAWING IS THE PROPERTY OF THE PIPER AIRCRAFT CORP. AND ITS POSSESSION BY UNAUTHORIZED PERSONS SHALL NOT BE CONSTRUED AS PERMISSION TO REPRODUCE FOR SALE, IN WHOLE OR IN PART, ANY DEVICES SHOWN THEREON

LET.	REVISION	DATE	BY
B	12295-2 WAS 12295 STEWART WARNER WAS AMM. HOYT TYPE #41	4-25-51	M.G.
A	1 OF 10128-21 & ONE 5 AMP CIRCUIT PROTECTOR ADDED LIGHT SWITCH RELOCATED	3-17-49	C.E.K.

MODEL | PER PLANE | NEXT ASSEMBLY | SUPERSEDES | SUP. BY

PIPER AIRCRAFT CORP.
LOCK HAVEN, PENNA.

PANEL ASSEMBLY—
SWITCH

DRAFTSMAN	CHECKER	STANDARDS
C.E.K. 3-4-49	H.R.K. 3-7-49	

12296

738

A738

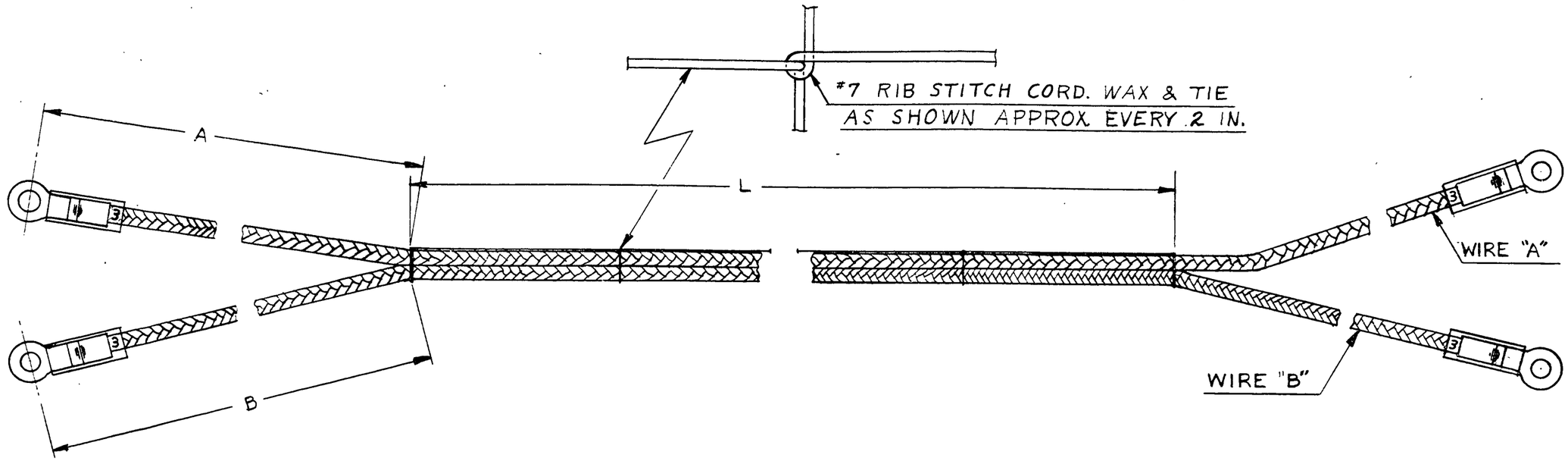

ASS'Y. NO.	WIRE "A"	WIRE "B"	A	B	L
12298	12177-18	12177-18	4	4	83
12298-2	12177-35	12177-35	8	8	44
12298-3	12177-36	12177-36	8	8	84
12298-4	12177-37	12177-37	8	8	116
12298-5	12177-63	12177-63	8	8	17
12298-6	12177-70	12177-70	8	8	22
12298-7	12177-72	12177-72	8	8	126
12298-8	12177-86	12177-86	4	4	68
12298-9	12177-89	12177-89	8	8	84
12298-10	12177-90	12177-90	8	8	17
12298-11	12177-91	12177-91	8	8	22
12298-12	12177-92	12177-92	8	8	126

ASS'Y. NO.	WIRE "A"	WIRE "B"	A	B	L
12298-13	12177-93	12177-93	8	8	116
12298-14	12177-94	12177-94	8	8	44
12298-15	12177-98	12177-98	8	8	130

LET.	REVISION	DATE	BY
H	-15 ADDED	5-14-51	L.E.M.
G	-13 & -14 ADDED	3-21-51	I.M.M.
F	-9,-10,-11,-12 ADDED	2-16-51	I.M.M.
E	-8 ADDED	1-9-51	HRK
D	-7 ADDED "L" FOR 12298 B3 WAS 71	2-24-50	HRK
C	-6 ADDED.	1-24-50	J.O.
B	-5 ADDED. B4 WAS 92. "L" FOR -3, -4 & -5 CHANGED	1-19-50	J.O.
A	-2,-3,-4 & TABLE ADDED	8-19-49	R.R.

MODEL | PER PLANE | NEXT ASSEMBLY | SUPERSEDES | SUP. BY

THIS DRAWING IS THE PROPERTY OF THE PIPER AIRCRAFT CORP. AND ITS POSSESSION BY UNAUTHORIZED PERSONS SHALL NOT BE CONSTRUED AS PERMISSION TO REPRODUCE FOR SALE, IN WHOLE OR IN PART, ANY DEVICES SHOWN THEREON.

PIPER AIRCRAFT CORP.
LOCK HAVEN, PENNA.

PART NO.	No. REQ.	SIZE	DESCRIPTION / MATERIAL
	1	2 x L	#7 RIB STITCH. CORD.
SEE TABLE	-	WIRE ASSEMBLY	

SCALE FULL SIZE | TOTAL WT.-LBS.
FINISH—PIPER SPECIFICATION #10
MANUFACTURING PRACTICES—PIPER SPECIFICATION #9

HARNESS ASSEMBLY-WIRE

DRAFTSMAN	CHECKER	STANDARDS
C. E. K. 3-7-49	H. R. K. 3-9-49	

12298

507

A 507

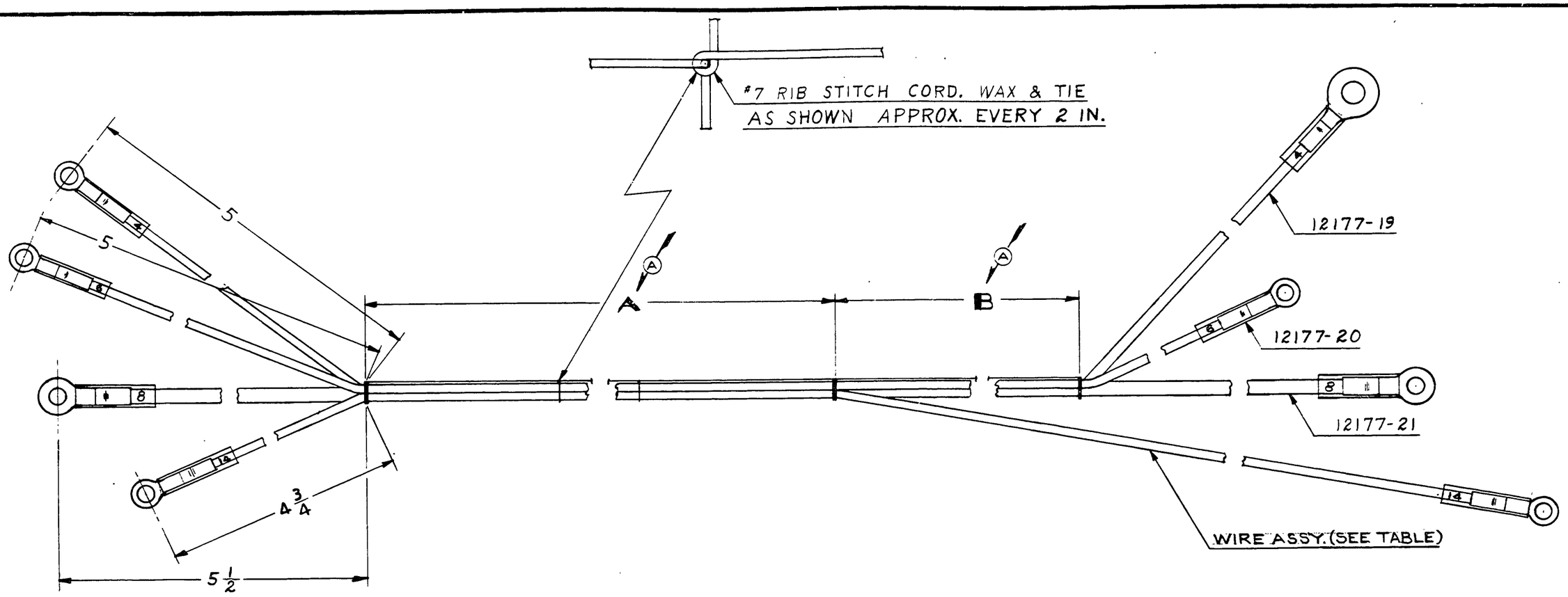

ASSY. NO.	A	B	WIRE NO.
12299	38	27½	12177-27
12299-2	46	19½	12177-41

12177-41	1	WIRE ASSY. (SEE TABLE)	
12177-27	1	10 FT. LONG	#7 RIB STITCH CORD
12177-21	1	WIRE ASSY.	
12177-20	1	WIRE ASSY.	
12177-19	1	WIRE ASSY	
PART NO.	No. REQ.	SIZE	DESCRIPTION / MATERIAL

SCALE FULL SIZE — TOTAL WT.—LBS.

FINISH—PIPER SPECIFICATION #10

MANUFACTURING PRACTICES—PIPER SPECIFICATION #9

LET.	REVISION	DATE	BY
C	"A" WAS 50 FOR 12299 & 58 FOR 12299-2	2-24-50	HRK
B	-2, 12177-41 & TABLE ADDED	9-30-49	R.M.
A	50 WAS 58, 27½ WAS 19½	8-10-49	R.M.

MODEL	PER PLANE	NEXT ASSEMBLY	SUPERSEDES	SUP. BY

THIS DRAWING IS THE PROPERTY OF THE PIPER AIRCRAFT CORP. AND ITS POSSESSION BY UNAUTHORIZED PERSONS SHALL NOT BE CONSTRUED AS PERMISSION TO REPRODUCE FOR SALE, IN WHOLE OR IN PART. ANY DEVICES SHOWN THEREON.

PIPER AIRCRAFT CORP.
LOCK HAVEN, PENNA.

HARNESS ASSEMBLY-WIRE

DRAFTSMAN	CHECKER	STANDARDS	
C.E.K. 3-7-49	H.R.K. 3-8-49		12299

508

A 508

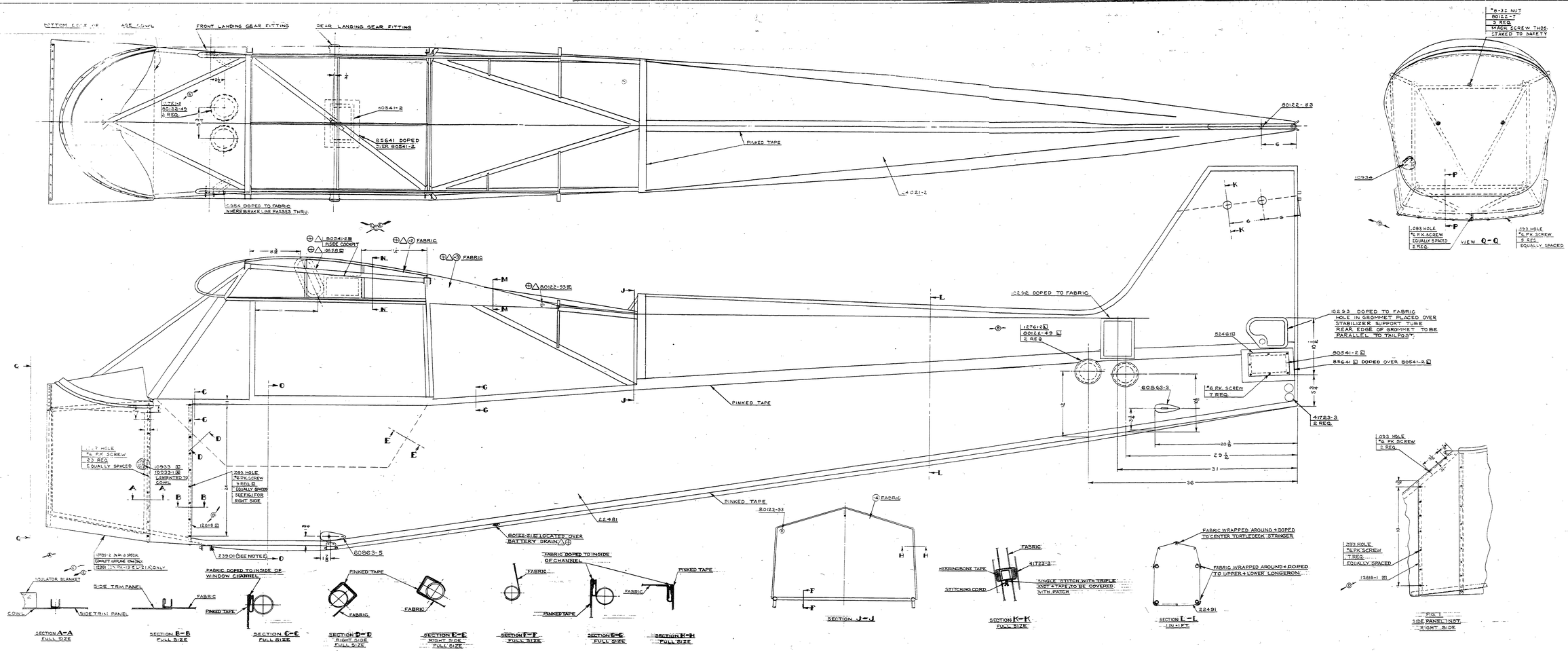

NOTE
1. PARTS MARKED ☒ USED ON LEFT SIDE ONLY. PARTS MARKED ☒ USED ON RIGHT SIDE ONLY.
2. REINFORCEMENT 23901 USED WHERE METAL FITTINGS PROTRUDE THRU FABRIC.
△ PARTS MARKED THUS NOT USED ON PA-18 SPECIAL (COMPLETE AIRPLANE 12965). PARTS MARKED ⊕ NOT USED ON MODEL L-21A

12618-5	1		PANEL ON MODEL L-21A ONLY
12491	1		BOTTOM FABRIC
80541-2	1		INSPECTION WINDOW FRAME
80122-53	3		GROMMET
"			GROMMET - FOR NO. 10 SCR. (FOR .093 HOLE) (SPEC. 20-20)
2617	1		PANEL - SIDE, SPECIAL (COMPLETE AIRPLANE 12965 & L-21A ONLY)
12618	1		PANEL - SIDE, .093 - PA-18 SPECIAL
10789-2	1		COWL ASSY. - TYPE AIRPLANE (SEE DWG.)
23901	10		REINFORCEMENT
AN 6-32	3		HEX NUT
- 2	1		84/36 PLASTIC SHEETING 3604
	1		4-STRAND COTTON HOUSEHOLD TWINE
	1		4 IN. LENGTHS PER STITCH CORD
	1		2" WIDE PINKED TAPE (SEE SPEC. NO. 2)
*6	39		TYPE "A" SCREW STOCK NO. PK. SCR.
85641	2		FABRIC
85481	1		WINDOW
0086933	2		REINFORCEMENT
80541-2	1		INSPECTION WINDOW FRAME
80122-53	1		
80122-51	4		GROMMET
80122-51	1		
80122-7	3		
60863-3	2		REINFORCEMENT
41723-3	6		FABRIC DOPE
24032-3	1		FABRIC
24021-2	2		TOP FABRIC
22481	2		SIDE FABRIC
12761-2	4		COVER
-1	1		PANEL
-3	1		
10858	1		GROMMET
10984	4		GROMMET
10934	1		INSULATOR BLANKET
10933-1	1		PANEL
10933	1		
12361	11		DOM. ASSY. (SEE PA-18 SPECIAL DWG.)
10932	2		GROMMET
0082	8		GROMMET
- 3	3		SCREW
- 2	2		SCREW
- 1	2		SCREW

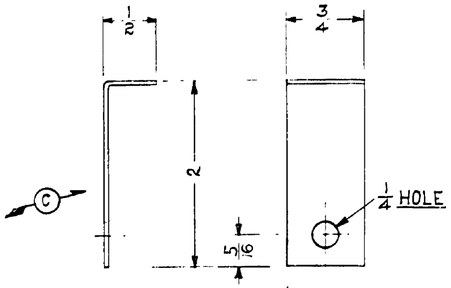

-3 DETAIL
FULL SIZE

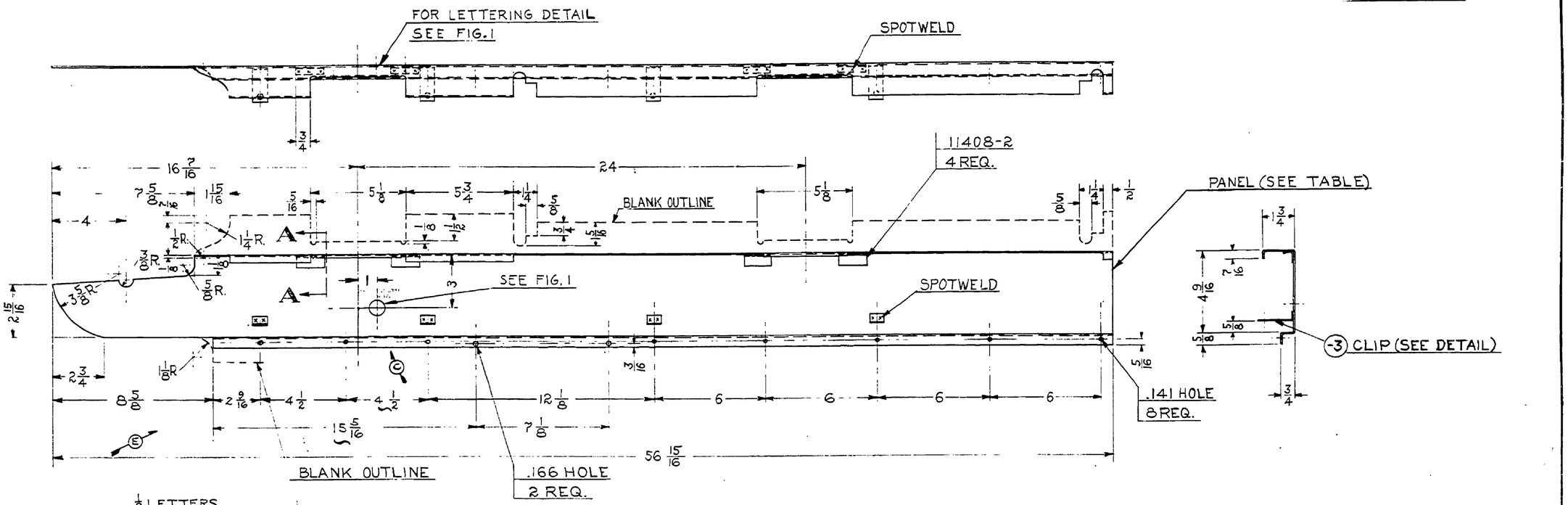

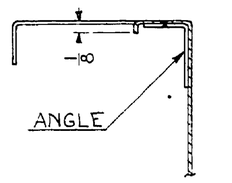

SECTION A-A
FULL SIZE

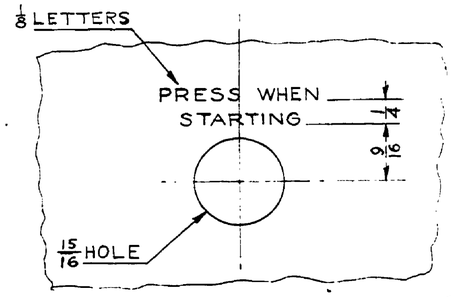

FIG. 1
LETTERING DETAIL
FULL SIZE
ON 12309-4 ONLY

ASSY. NO.	PANEL NO.	REMARKS
12309	12309-2	WITHOUT 15/16 HOLE & LETTERING
12309-4	12309-5	WITH 15/16 HOLE & LETTERING

LET.	REVISION	DATE	BY
E	2 9/16 WAS 1 9/16; 4 1/2 WAS 5; 15 5/16 WAS 14 1/2	7-2-51	C.B.
D	4 OF .082 HOLES REM.	11-5-51	M.G.
C	15/16 HOLE RELOCATED: 2 WAS 1 7/8	5-4-50	T.C.
B	TABLE-4-5 & FIG. 1 ADDED	11-14-49	C.K.
A	15/16 HOLE + FIG. 1 REMOVED	8-10-49	R.M.

THIS DRAWING IS THE PROPERTY OF THE PIPER AIRCRAFT CORP. AND ITS POSSESSION BY UNAUTHORIZED PERSONS SHALL NOT BE CONSTRUED AS PERMISSION TO REPRODUCE FOR SALE, IN WHOLE OR IN PART, ANY DEVICES SHOWN THEREON

MODEL	PER PLANE	NEXT ASSEMBLY	SUPERSEDES	SUP. BY

PIPER AIRCRAFT CORP.
LOCK HAVEN, PENNA.

PART NO.	NO. REQ.	SIZE	DESCRIPTION / MATERIAL
11408-2	4	ANGLE	
-3	4	.032×3/4×2 1/2	3S-1/2H. ALUM.
-5	1	.020×8 3/16×56 15/16	3S-1/2H. ALUM.
-2			

SCALE 3 IN. = 1 FT. & NOTED — TOTAL WT.—LBS.
FINISH—PIPER SPECIFICATION #10
MANUFACTURING PRACTICES—PIPER SPECIFICATION #9

PANEL ASSEMBLY—
COCKPIT LEFT TOP

H.R.K.	J.C.B.		12309
3-15-49	3-16-49		
DRAFTSMAN	CHECKER	STANDARDS	

739

A739

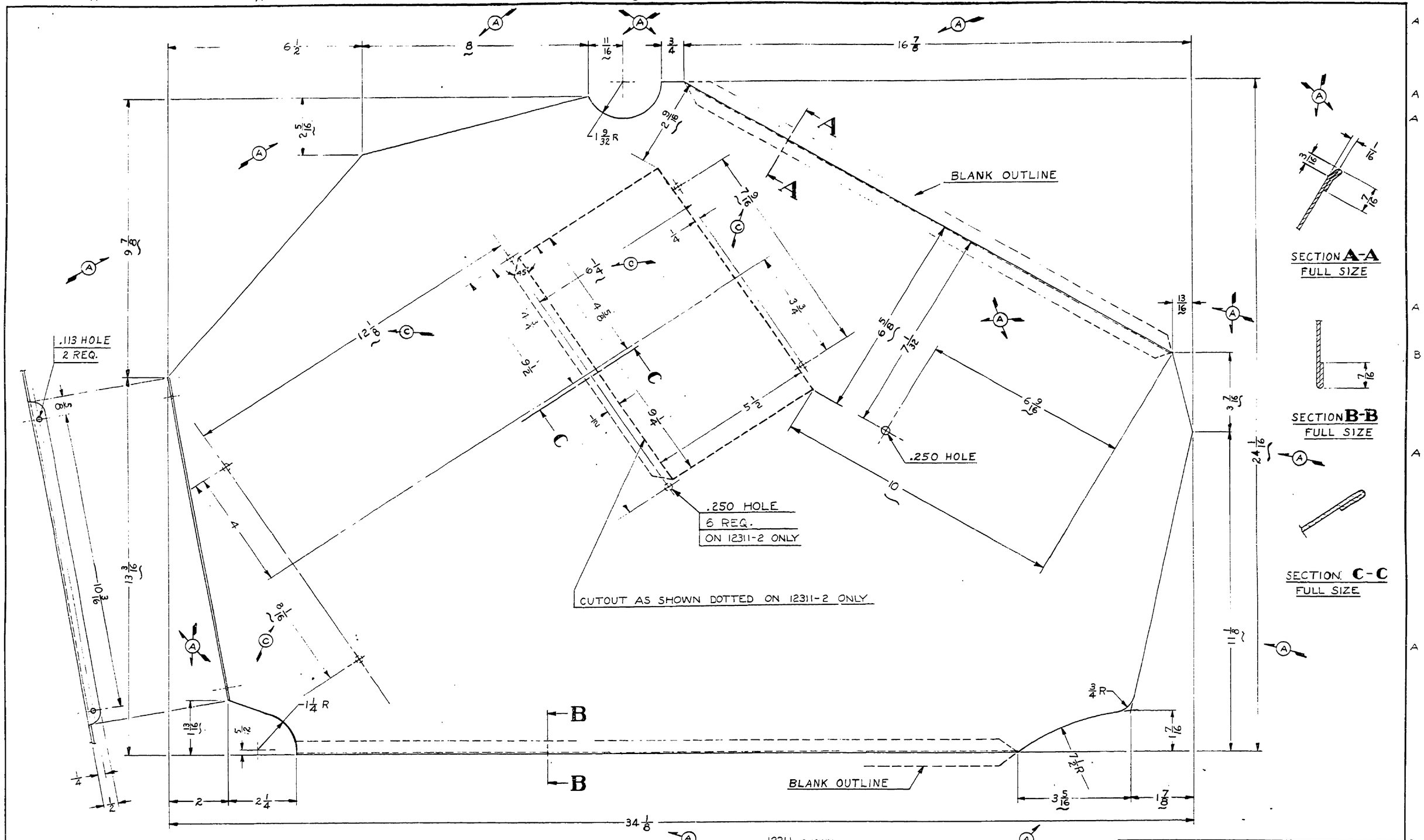

NOTE :
1. SPRAY FAR SIDE WITH SOUND DEADENER #A-31
PURCH. NOX-RUST CHEMICAL CORP. (ON 12311 ONLY)

12311 SHOWN
12311-2 SAME EXCEPT AS SHOWN DOTTED

THIS DRAWING IS THE PROPERTY OF THE PIPER AIRCRAFT CORP. AND ITS POSSESSION BY UNAUTHORIZED PERSONS SHALL NOT BE CONSTRUED AS PERMISSION TO REPRODUCE FOR SALE, IN WHOLE OR IN PART, ANY DEVICES SHOWN THEREON

LET.	REVISION	DATE	BY
D	NOTE 1 ADDED	12-11-50	FCS
C	12½ WAS 12, 8 5/16 WAS 8, 6¼ WAS 6, 7 9/16 WAS 7½	9-15-50	K.D.
B	12311-2 ADDED	8-17-50	FCS
A	DIMS. REVISED	5-17-50	C.K.

MODEL	PER PLANE	NEXT ASSEMBLY	SUPERSEDES	SUP. BY

PIPER AIRCRAFT CORP.
LOCK HAVEN, PENNA.

PART NO.	No. REQ.	SIZE	DESCRIPTION
		.020 × 24 ½ × 34 5/8	3S-½H ALUM.
		MATERIAL	

SCALE 6 IN. = 1 FT. & NOTED. | TOTAL WT.—LBS.
FINISH—PIPER SPECIFICATION #10
MANUFACTURING PRACTICES—PIPER SPECIFICATION #9

PANEL—COCKPIT
RIGHT FRONT

C. E. K.	H. R. K.		
3-11-49	3-14-49		
DRAFTSMAN	CHECKER	STANDARDS	12311

A740

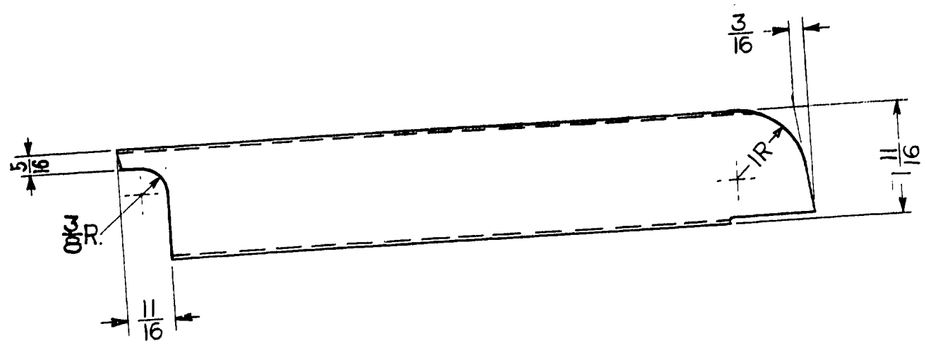

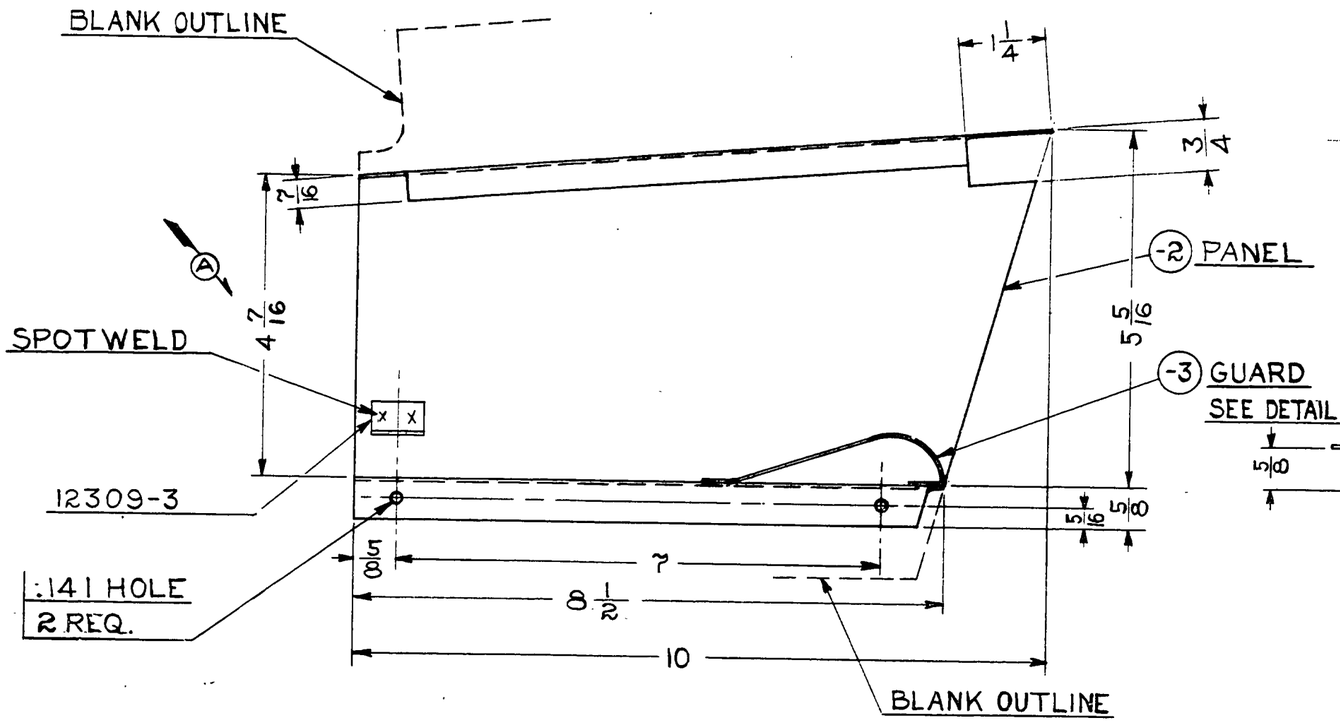

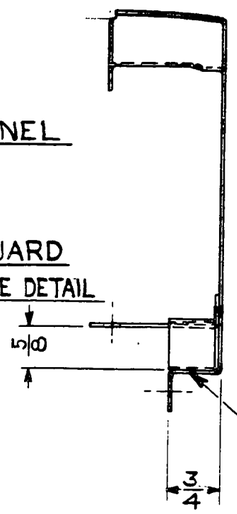

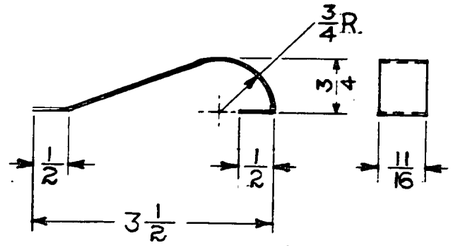

-3 DETAIL

-3	1	.020 × 11/16 × 4 5/8	3S-½ H. ALUM.
12309-3	1	CLIP	
-2	1	.020 × 8¾ × 10	3S-½ H. ALUM.
PART No.	No. REQ.	SIZE	DESCRIPTION
		MATERIAL	

SCALE 6 IN. = 1 FT. | TOTAL WT.-LBS.

FINISH—PIPER SPECIFICATION #10

MANUFACTURING PRACTICES—PIPER SPECIFICATION #9

PANEL ASSEMBLY— COCKPIT TOP REAR

LET.	REVISION	DATE	BY
A	4 7/16 WAS 4 1/2	3-8-51	I.MM.

MODEL | PER PLANE | NEXT ASSEMBLY | SUPERSEDES | SUP. BY

THIS DRAWING IS THE PROPERTY OF THE PIPER AIRCRAFT CORP. AND ITS POSSESSION BY UNAUTHORIZED PERSONS SHALL NOT BE CONSTRUED AS PERMISSION TO REPRODUCE FOR SALE, IN WHOLE OR IN PART. ANY DEVICES SHOWN THEREON.

PIPER AIRCRAFT CORP.
LOCK HAVEN, PENNA.

DRAFTSMAN	CHECKER	STANDARDS
H.R.K. 3-15-49	J.C.B. 3-16-49	

12314

12314 509

A 509

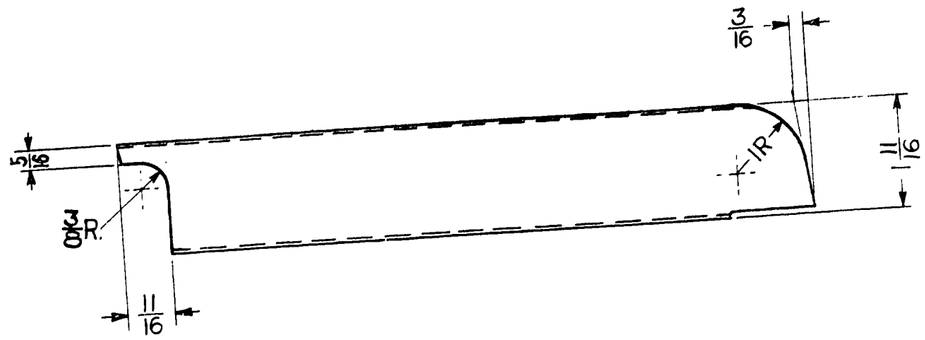

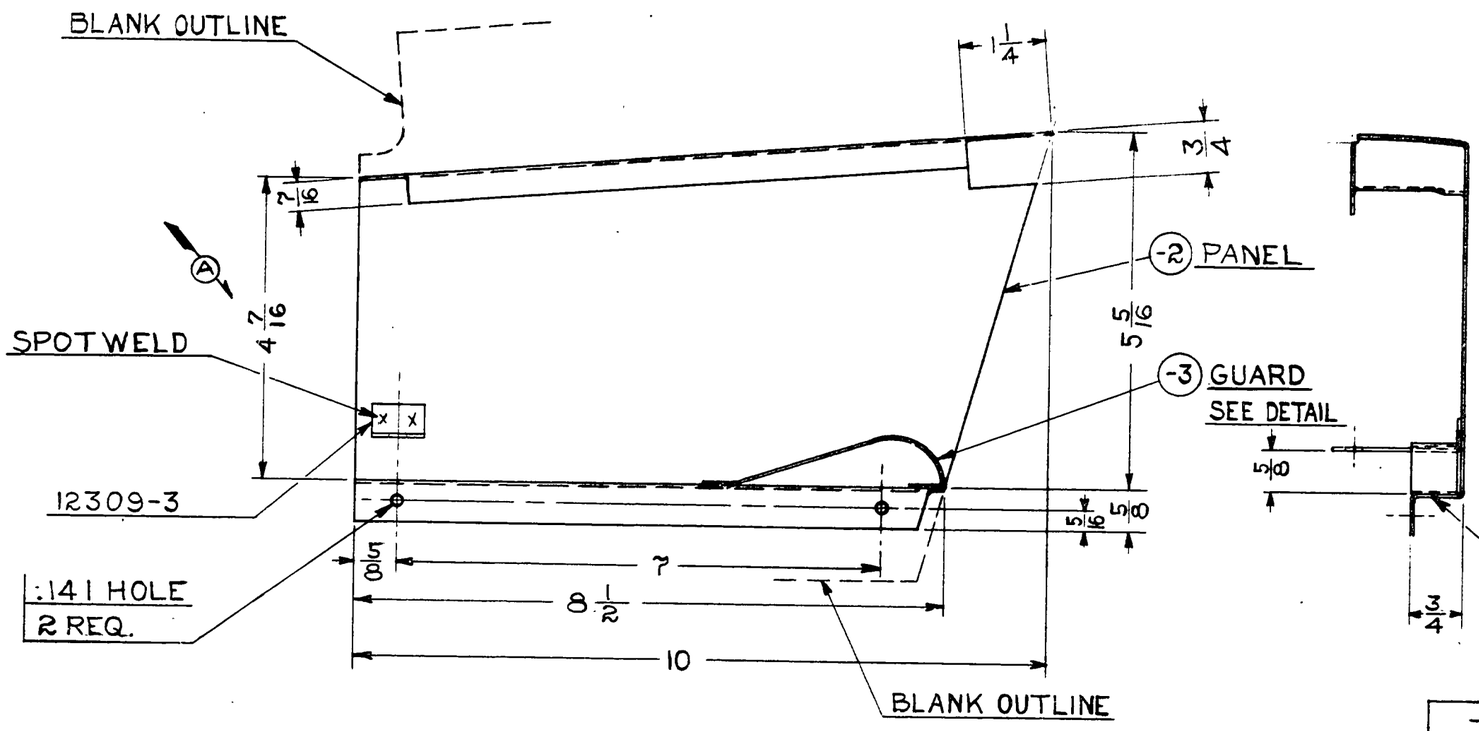

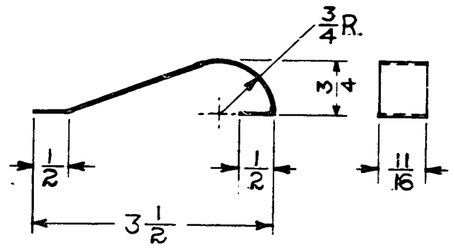

-3 DETAIL

-3	1	.020×11/16×4 5/8	3S-½ H. ALUM.
12309-3	1	CLIP	
-2	1	.020×8¾×10	3S-½ H. ALUM.
PART No.	No. REQ.	SIZE	DESCRIPTION MATERIAL

SCALE 6 IN. = 1 FT. | TOTAL W .-LBS.

FINISH—PIPER SPECIFICATION #10

MANUFACTURING PRACTICES—PIPER SPECIFICATION #9

PANEL ASSEMBLY— COCKPIT TOP REAR

MODEL	PER PLANE	NEXT ASSEMBLY	SUPERSEDES	SUP. BY

THIS DRAWING IS THE PROPERTY OF THE PIPER AIRCRAFT CORP. AND ITS POSSESSION BY UNAUTHORIZED PERSONS SHALL NOT BE CONSTRUED AS PERMISSION TO REPRODUCE FOR SALE, IN WHOLE OR IN PART, ANY DEVICES SHOWN THEREON.

LET.	REVISION	DATE	BY
A	4 7/16 WAS 4 1/2	3-8-51	I.MM.

PIPER AIRCRAFT CORP.
LOCK HAVEN, PENNA.

DRAFTSMAN	CHECKER	STANDARDS
H.R.K. 3-15-49	J.C.B. 3-16-49	

12314

509

A 509

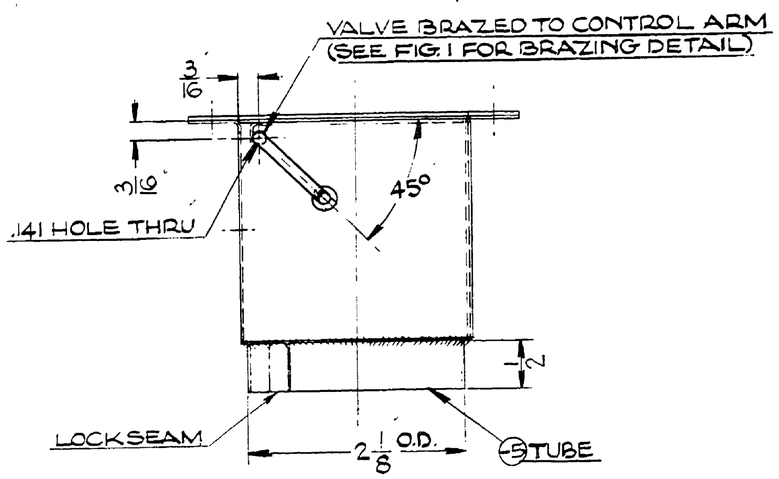

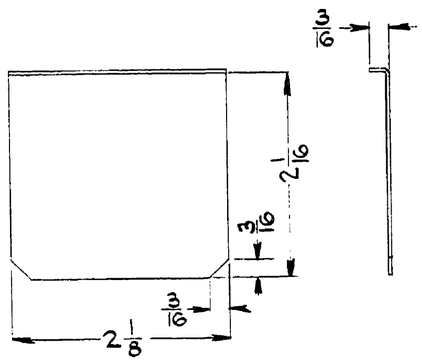

-6 DETAIL

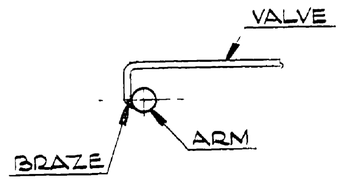

FIG. 1
BRAZING DETAIL
TWICE SIZE

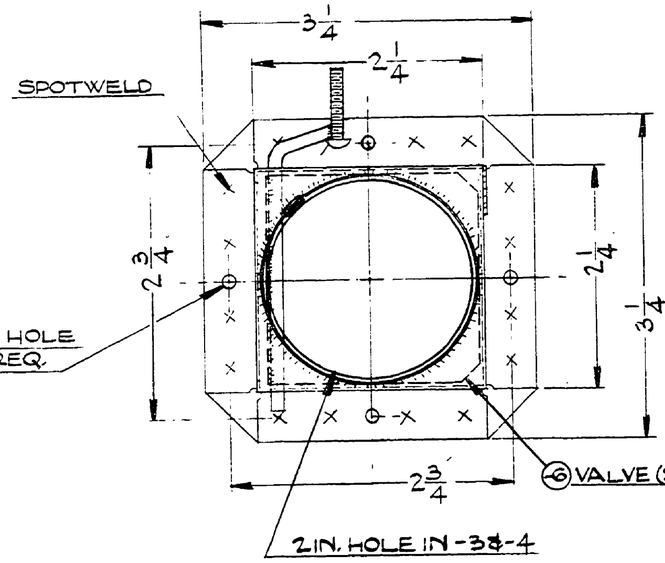

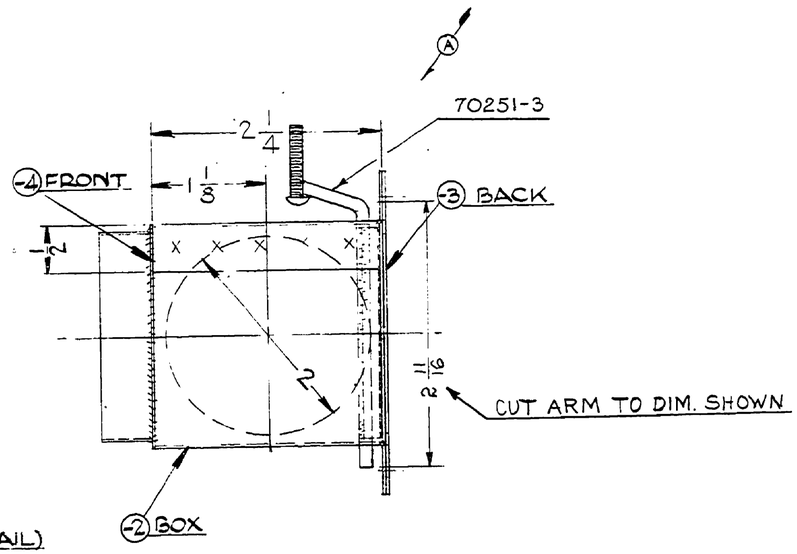

PART NO.	NO. REQ.	SIZE	DESCRIPTION
70251-3	1	ARM ASS'Y.	
-6	1	.032 × 2 1/8 × 2 1/4	#1025 STEEL
-5	1	.020 × 1/2 × 7 1/4	H.R. STEEL
-4	1	.020 × 2 1/4 × 2 1/4	
-3	1	.020 × 3 1/4 × 3 1/4	
-2	1	.020 × 2 3/4 × 9 1/2	

MATERIAL

SCALE FULL SIZE & NOTED — TOTAL WT.—LBS.

FINISH—PIPER SPECIFICATION #10

MANUFACTURING PRACTICES—PIPER SPECIFICATION #9

THIS DRAWING IS THE PROPERTY OF THE PIPER AIRCRAFT CORP. AND ITS POSSESSION BY UNAUTHORIZED PERSONS SHALL NOT BE CONSTRUED AS PERMISSION TO REPRODUCE FOR SALE, IN WHOLE OR IN PART, ANY DEVICES SHOWN THEREON

LET.	REVISION	DATE	BY
A	70251-3 WAS 70251, ARM ASS'Y INVERTED	11-22-49	K.D.

MODEL	PER PLANE	NEXT ASSEMBLY	SUPERSEDES	SUP. BY

PIPER AIRCRAFT CORP.
LOCK HAVEN, PENNA.

BOX ASSEMBLY—
CABIN HEAT

DRAFTSMAN	CHECKER	STANDARDS
3-11-49	3-11-49	

12315

A741

WAS 1135 / D1004-A

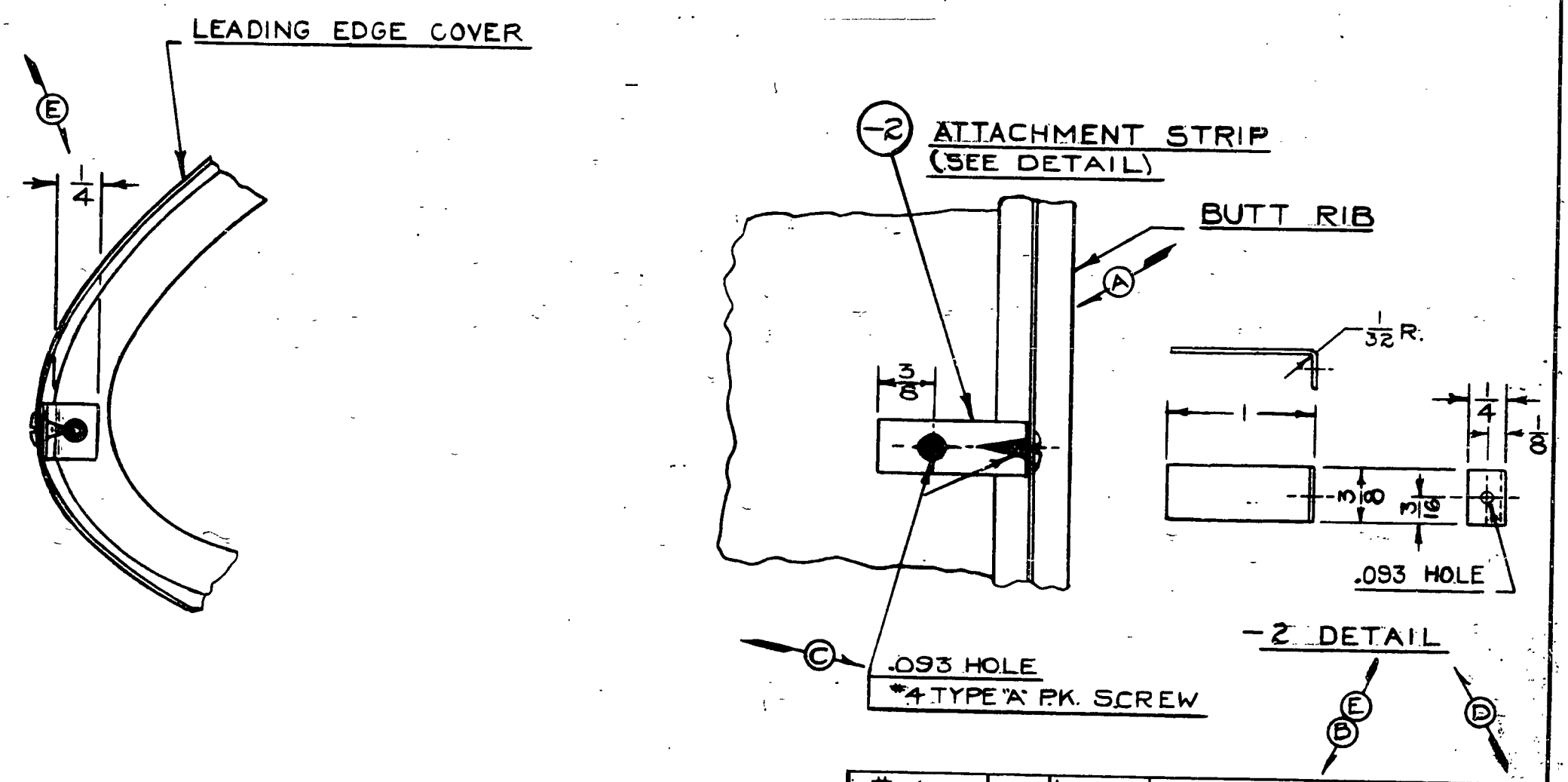

F LIMITS, SHOP PRACTICES AND FINISH, UNLESS OTHERWISE NOTED, TO BE IN ACCORDANCE WITH PIPER SPECIFICATIONS #9 AND #10.

PART No.	No. REQ.	SIZE	DESCRIPTION / MATERIAL
# 4	2	1/4 LONG	TYPE "A" STOVE HD. P.K. SCREW
- 2	1	.025 × 3/8 × 1 1/4	3 S. 1/2 H. ALUMINUM.

SCALE FULL SIZE — TOTAL WT. - LBS.

FINISH

LET.	REVISION	DATE	BY
H	J5C N.A. 16355 REM.	11-29-45	E.L.N.
G	REDRAWN WITHOUT CHANGE	4-11-44	I.M.M.
F	J5C NEXT ASSY. 16355 WAS 13555	11-24-43	I.M.M.
E	1 1/4 WAS 1 3/8; 1/4 WAS 3/8	7-28-43	M.G.S.
D	-2 DETAIL ADDED	7-28-43	M.G.S.
C	.093 HOLE ADDED	3-3-43	R.R.F.
B	TYPE "A" P.K. SCREW WAS "Z"	3-3-43	R.R.F.
A	1 WAS 1 1/2	12-12-41	C.L.W.

MODEL	PER SHIP	NEXT ASSEMBLY	SUPERSEDES	SUP. BY
J5C	2	14766		
ME-1	2	13555		
J5D	2	13555, 14766		
TG-8 [illegible]	2	13004		
J3	2	13004, 15556		
J5	2	12844		
J4	2	10615		

PIPER AIRCRAFT CORP.
LOCK HAVEN, PENNA.

EDGE ATTACHMENT — WING BUTT RIB LEADING

DRAWN	CHECKED	APPROVED
T. McNERNEY 4-11-44	R.E.T. 4-11-44	

12331

H

H

107

A107

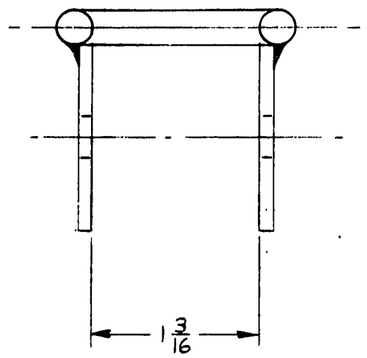

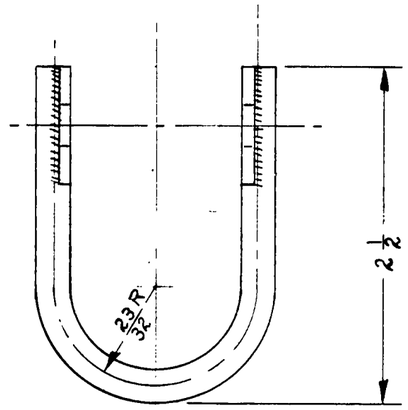

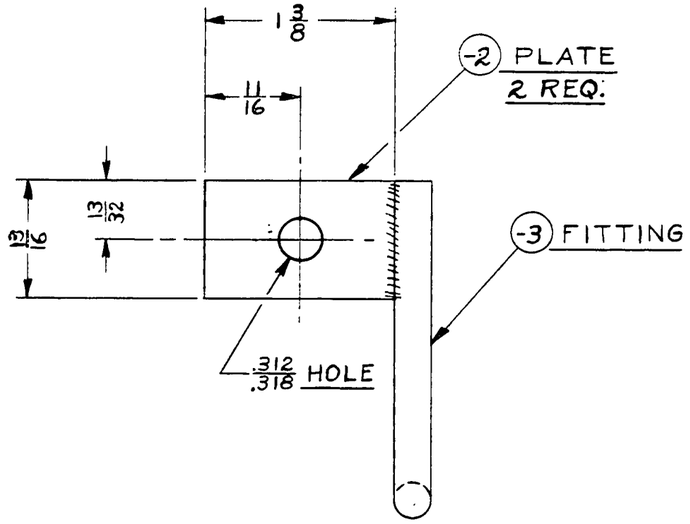

-3	1	1/4 DIA. × 5 13/16	C.F. STEEL ROD
-2	2	.095 × 13/16 × 1 3/8	#1025 STEEL
PART No.	No. REQ.	SIZE	DESCRIPTION / MATERIAL

SCALE FULL SIZE — TOTAL WT.—LBS.

FINISH—PIPER SPECIFICATION #10

MANUFACTURING PRACTICES—PIPER SPECIFICATION #9

FITTING ASSEMBLY— TIE DOWN

THIS DRAWING IS THE PROPERTY OF THE PIPER AIRCRAFT CORP. AND ITS POSSESSION BY UNAUTHORIZED PERSONS SHALL NOT BE CONSTRUED AS PERMISSION TO REPRODUCE FOR SALE, IN WHOLE OR IN PART, ANY DEVICES SHOWN THEREON

LET.	REVISION	DATE	BY

MODEL	PER PLANE	NEXT ASSEMBLY	SUPERSEDES	SUP. BY

PIPER AIRCRAFT CORP.
LOCK HAVEN, PENNA.

C.E.K.	H.R.K.	
4-26-49	4-27-49	
DRAFTSMAN	CHECKER	STANDARDS

12345

12345 510

A510

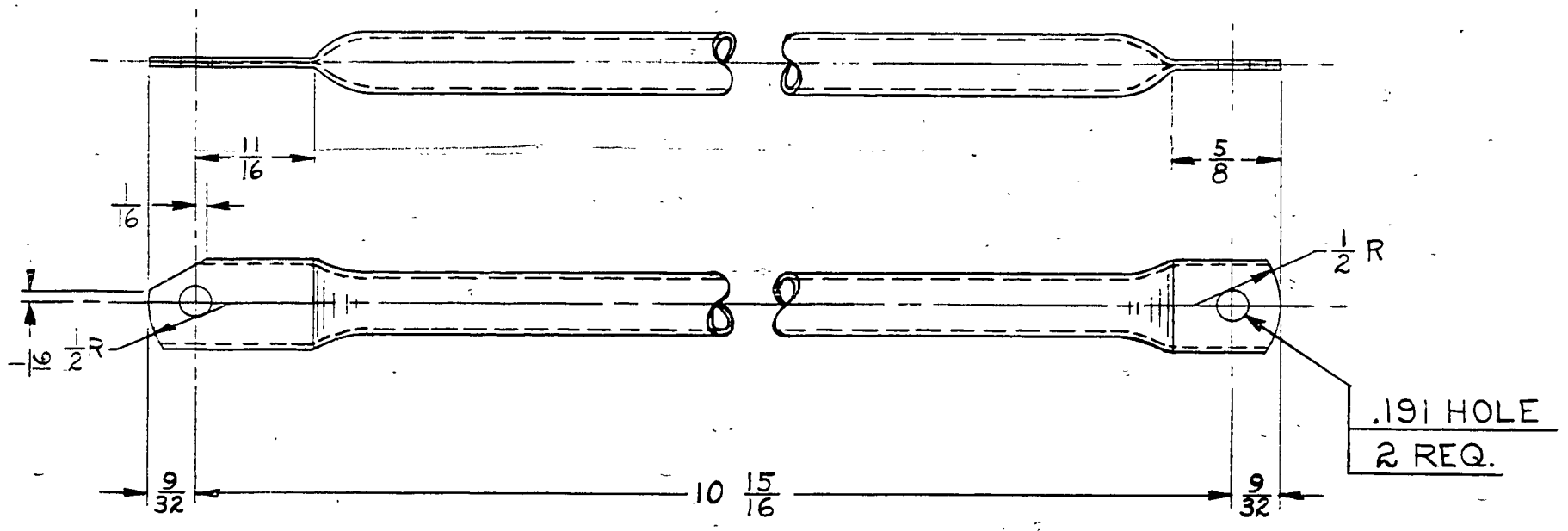

LET.	REVISION	DATE	BY	MODEL	PER PLANE	NEXT ASSEMBLY	SUPERSEDES	SUP. BY	

THIS DRAWING IS THE PROPERTY OF THE PIPER AIRCRAFT CORP. AND ITS POSSESSION BY UNAUTHORIZED PERSONS SHALL NOT BE CONSTRUED AS PERMISSION TO REPRODUCE FOR SALE, IN WHOLE OR IN PART, ANY DEVICES SHOWN THEREON.

PIPER AIRCRAFT CORP.
LOCK HAVEN, PENNA.

PART NO.	No. REQ.	SIZE	MATERIAL
		3/8 x .028 x 11 1/2	#1025 STL. TUBE

SCALE FULL SIZE — TOTAL WT.—LBS.

FINISH—PIPER SPECIFICATION #10

MANUFACTURING PRACTICES—PIPER SPECIFICATION #9

TUBE - ENGINE COWL SUPPORT

C. E. K.	H. R. K.		12350
5-12-49	5-16-49		
DRAFTSMAN	CHECKER	STANDARDS	

12350 108

A 108

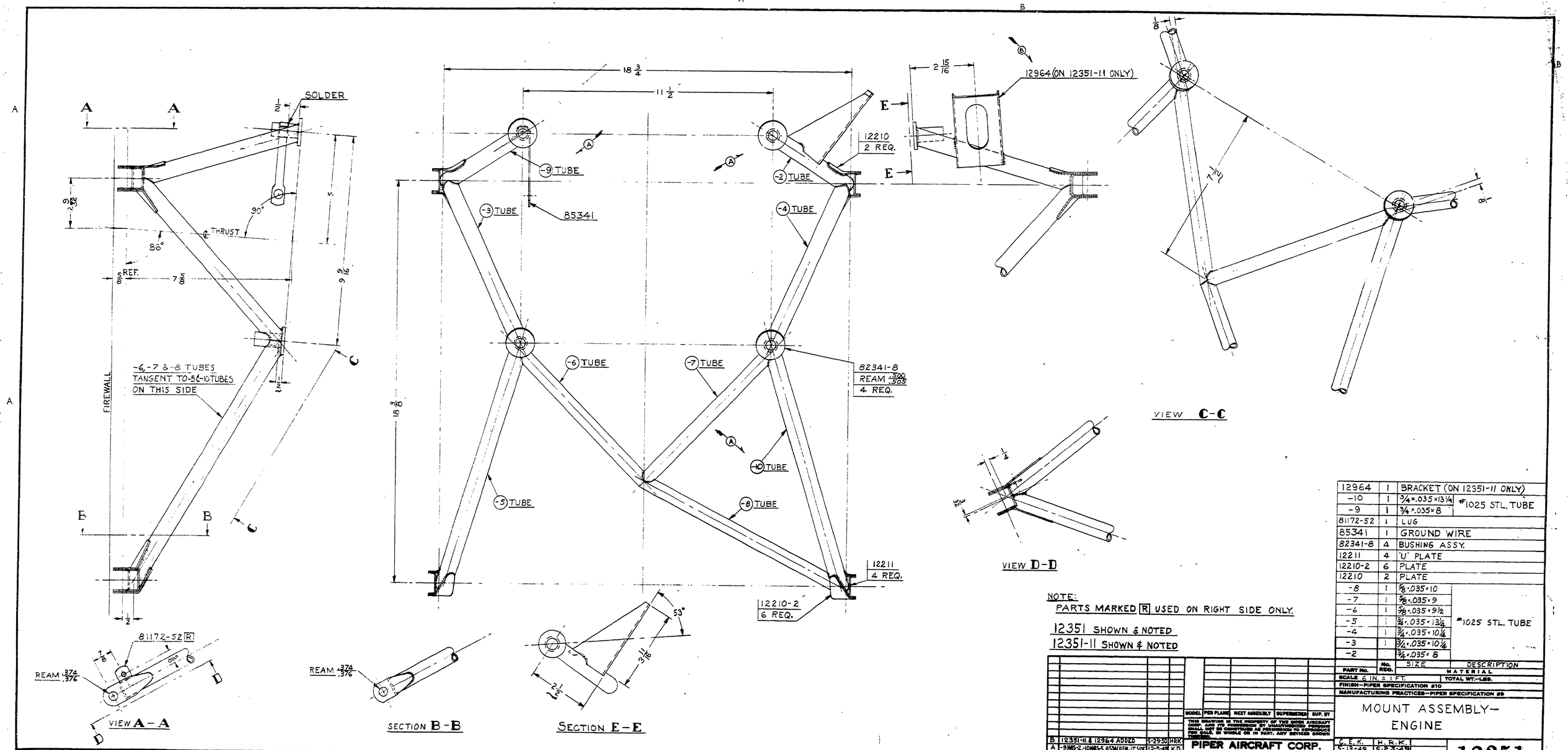

NOTE:
PARTS MARKED R USED ON RIGHT SIDE ONLY.

12351 SHOWN & NOTED
12351-11 SHOWN & NOTED

PART No.	No. REQ.	SIZE	DESCRIPTION
12964	1	BRACKET (ON 12351-11 ONLY)	
-10	1	3/4×.035×13 1/4	#1025 STL. TUBE
-9	1	3/4×.035×8	
81172-52	1	LUG	
85341	1	GROUND WIRE	
82341-8	4	BUSHING ASSY.	
12211	4	"U" PLATE	
12210-2	6	PLATE	
12210	2	PLATE	
-8	1	5/8×.035×10	#1025 STL. TUBE
-7	1	5/8×.035×9	
-6	1	5/8×.035×9 1/2	
-5	1	3/4×.035×13 1/4	
-4	1	3/4×.035×10 1/4	
-3	1	3/4×.035×10 1/4	
-2	1	3/4×.035×8	

MATERIAL
SCALE 6 IN. = 1 FT. TOTAL WT.—LBS.
FINISH—PIPER SPECIFICATION #10
MANUFACTURING PRACTICES—PIPER SPECIFICATION #9

MOUNT ASSEMBLY—ENGINE

LET.	REVISION	DATE	BY
B	12351-11 & 12964 ADDED	5-29-50	HRK
A	-9 HAS -2, -10 HAS -5, 85341 REM. LT. SIDE	12-5-49	K.D.

MODEL | PER PLANE | NEXT ASSEMBLY | SUPERSEDES | SUP. BY

THIS DRAWING IS THE PROPERTY OF THE PIPER AIRCRAFT CORP. AND ITS POSSESSION BY UNAUTHORIZED PERSONS SHALL NOT BE CONSTRUED AS PERMISSION TO REPRODUCE FOR SALE, IN WHOLE OR IN PART, ANY DEVICES SHOWN THEREIN.

PIPER AIRCRAFT CORP.
LOCK HAVEN, PENNA.

DRAFTSMAN	CHECKER	STANDARDS
C. E. K. 5-13-49	H. R. K. 5-23-49	

12351

848

A848

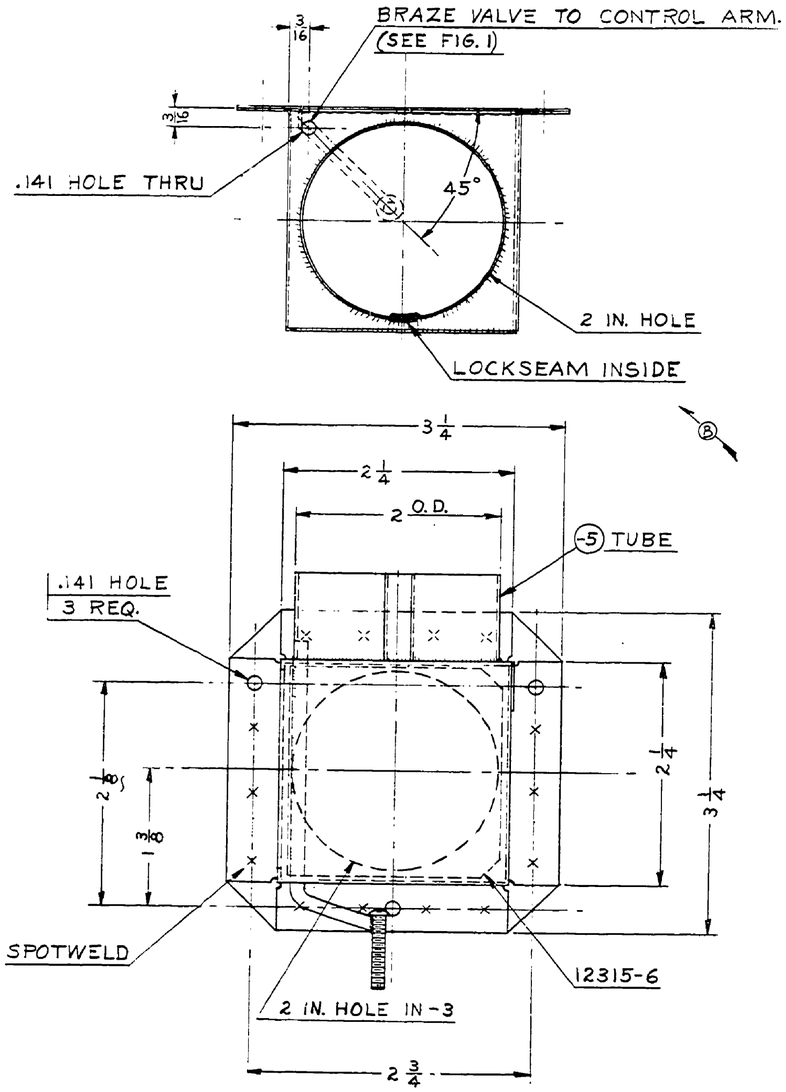

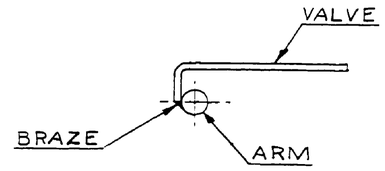

FIG. 1
BRAZING DETAIL
TWICE SIZE

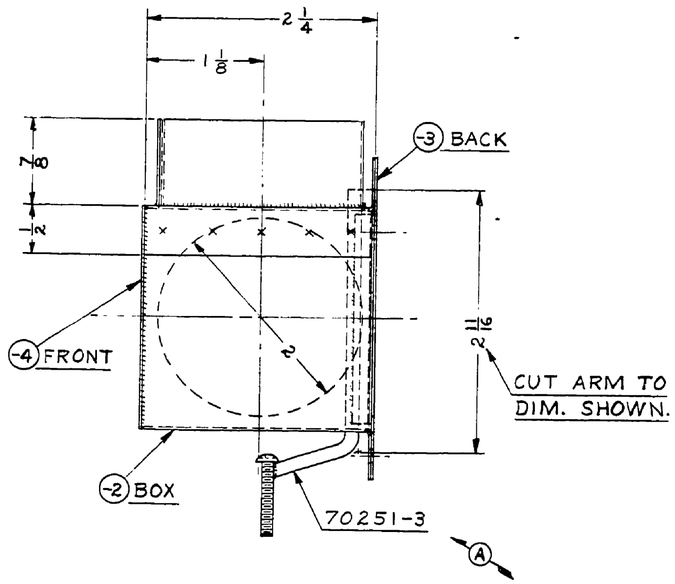

70251-3	1	ARM ASSY.	
12315-6	1	VALVE	
-5	1	.020 × 7/8 × 7 1/32	H. R. STEEL
-4	1	.020 × 2 1/4 × 2 1/4	
-3	1	.020 × 3 1/4 × 3 1/4	
-2	1	.020 × 2 3/4 × 9 1/2	
PART NO.	NO. REQ.	SIZE	DESCRIPTION
		MATERIAL	

SCALE FULL SIZE & NOTED — TOTAL WT.—LBS.
FINISH—PIPER SPECIFICATION #10
MANUFACTURING PRACTICES—PIPER SPECIFICATION #9

THIS DRAWING IS THE PROPERTY OF THE PIPER AIRCRAFT CORP. AND ITS POSSESSION BY UNAUTHORIZED PERSONS SHALL NOT BE CONSTRUED AS PERMISSION TO REPRODUCE FOR SALE, IN WHOLE OR IN PART, ANY DEVICES SHOWN THEREON.

LET.	REVISION	DATE	BY
B	LOCKSEAM LOCATION "INSIDE" ADDED	6-13-51	HRK
A	70251-3 WAS 70251	2-24-50	C.K.

MODEL | PER PLANE | NEXT ASSEMBLY | SUPERSEDES | SUP. BY

PIPER AIRCRAFT CORP.
LOCK HAVEN, PENNA.

BOX ASSEMBLY—
CABIN HEAT

DRAFTSMAN	CHECKER	STANDARDS	
C.E.K. 5-16-49	H.R.K. 5-25-49		12353

742

A742

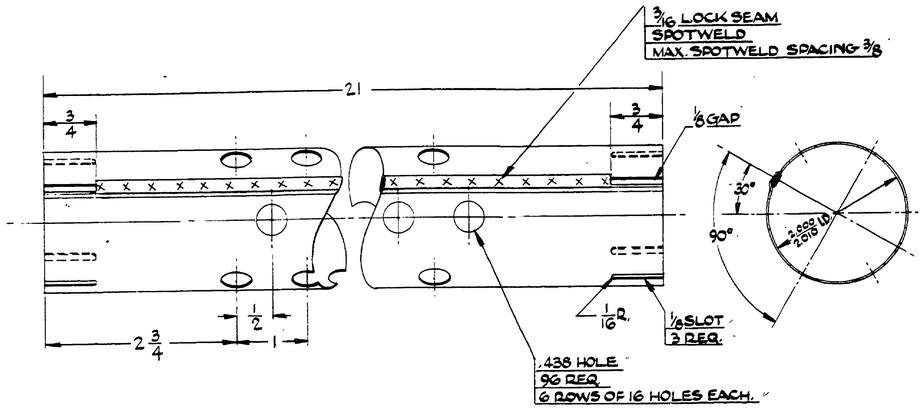

DETAIL OF -2

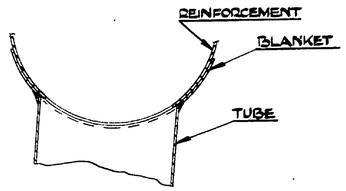

SECTION A-A

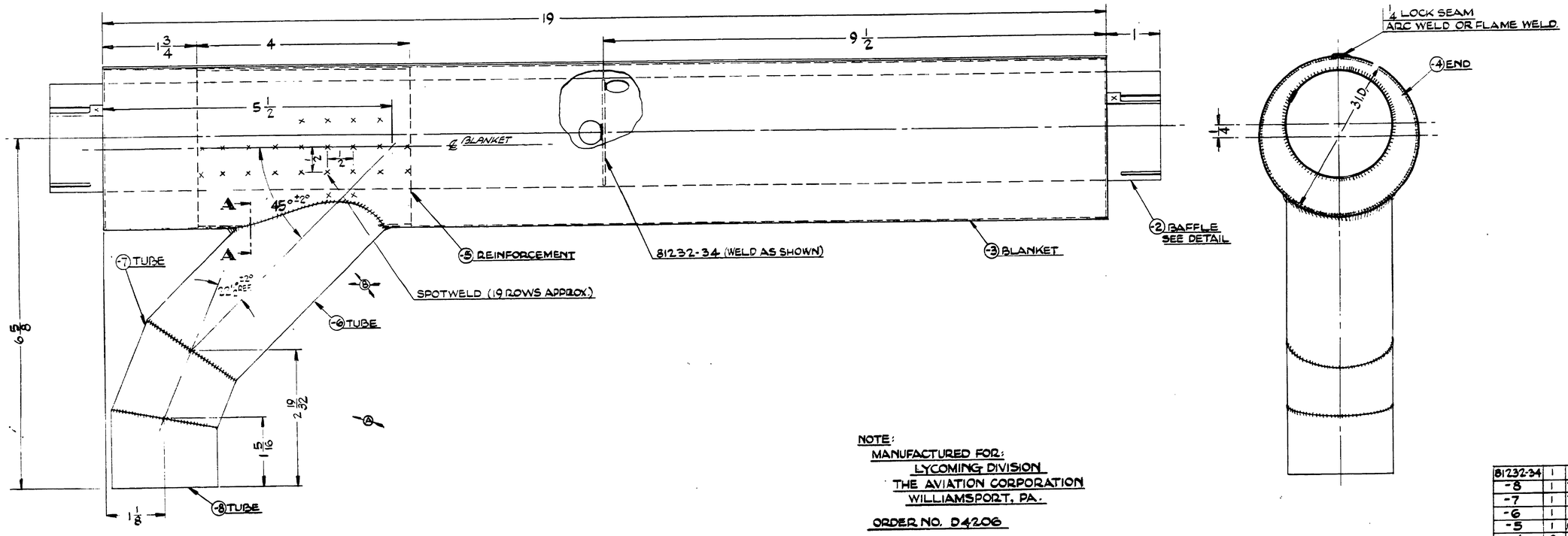

NOTE:
MANUFACTURED FOR:
LYCOMING DIVISION
THE AVIATION CORPORATION
WILLIAMSPORT, PA.

ORDER NO. D4206

PART NO.	No. REQ.	SIZE	DESCRIPTION
81232-34	1	DISC	
-8	1	2×.035×1 3/8	TYPE 347 ST. STL. ANNEALED 2D FINIS.
-7	1	2×.035×2	
-6	1	2×.035×4 1/4	
-5	1	.032×4×9 3/8	
-4	2	.020×3×3	
-3	1	.020×10×19	
-2	1	.020×7×21	

MATERIAL

SCALE FULL SIZE — TOTAL WT.-LBS.

FINISH—PIPER SPECIFICATION #10

MANUFACTURING PRACTICES—PIPER SPECIFICATION #9

MODEL | PER PLANE | NEXT ASSEMBLY | SUPERSEDES | SUP. BY

THIS DRAWING IS THE PROPERTY OF THE PIPER AIRCRAFT CORP. AND ITS POSSESSION BY UNAUTHORIZED PERSONS SHALL NOT BE CONSTRUED AS PERMISSION TO REPRODUCE FOR SALE, IN WHOLE OR IN PART, ANY DEVICES SHOWN THEREON.

LET.	REVISION	DATE	BY
B	ANGULAR TOLERANCE ADDED	6-24-49	RC
A	TAKEOFF REVISED	6-14-49	RC

PIPER AIRCRAFT CORP.
LOCK HAVEN, PENNA.

MUFFLER ASSEMBLY
(LYCOMING SPECIAL)

DRAFTSMAN	CHECKER	STANDARDS
RC 5-17-49	H.R.K. 5-17-49	

12354

849

Philadelphia Blue Print Co. 150 8-1-48

AB

A849

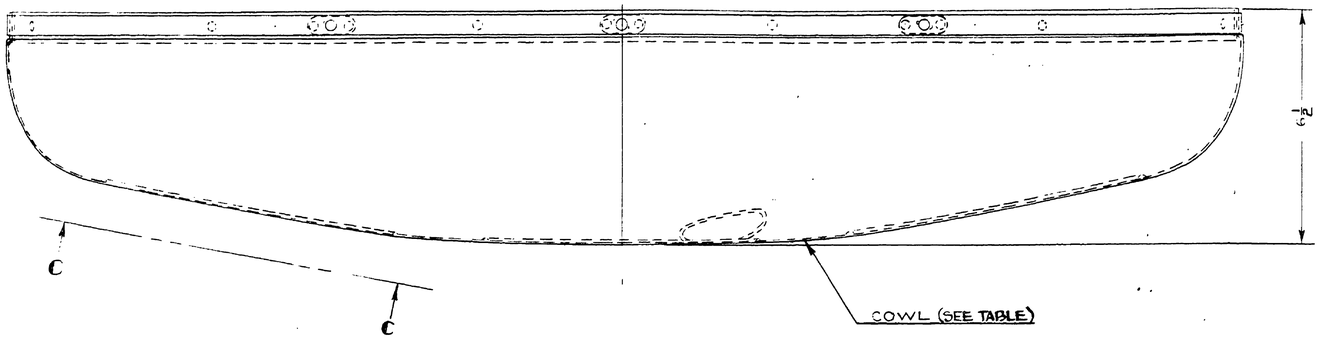

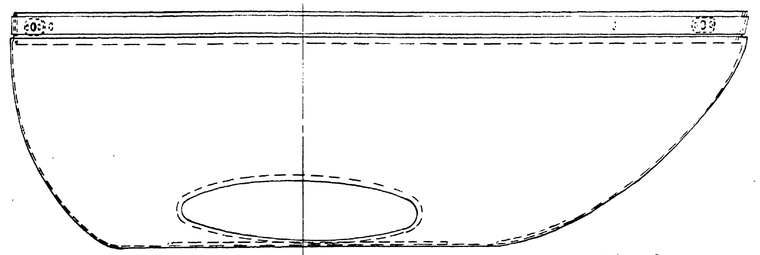

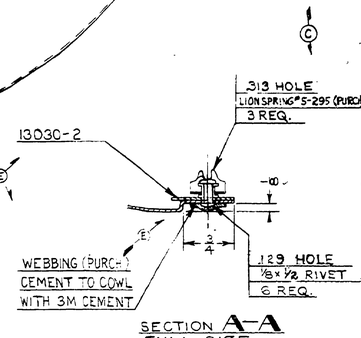

SECTION A-A
FULL SIZE

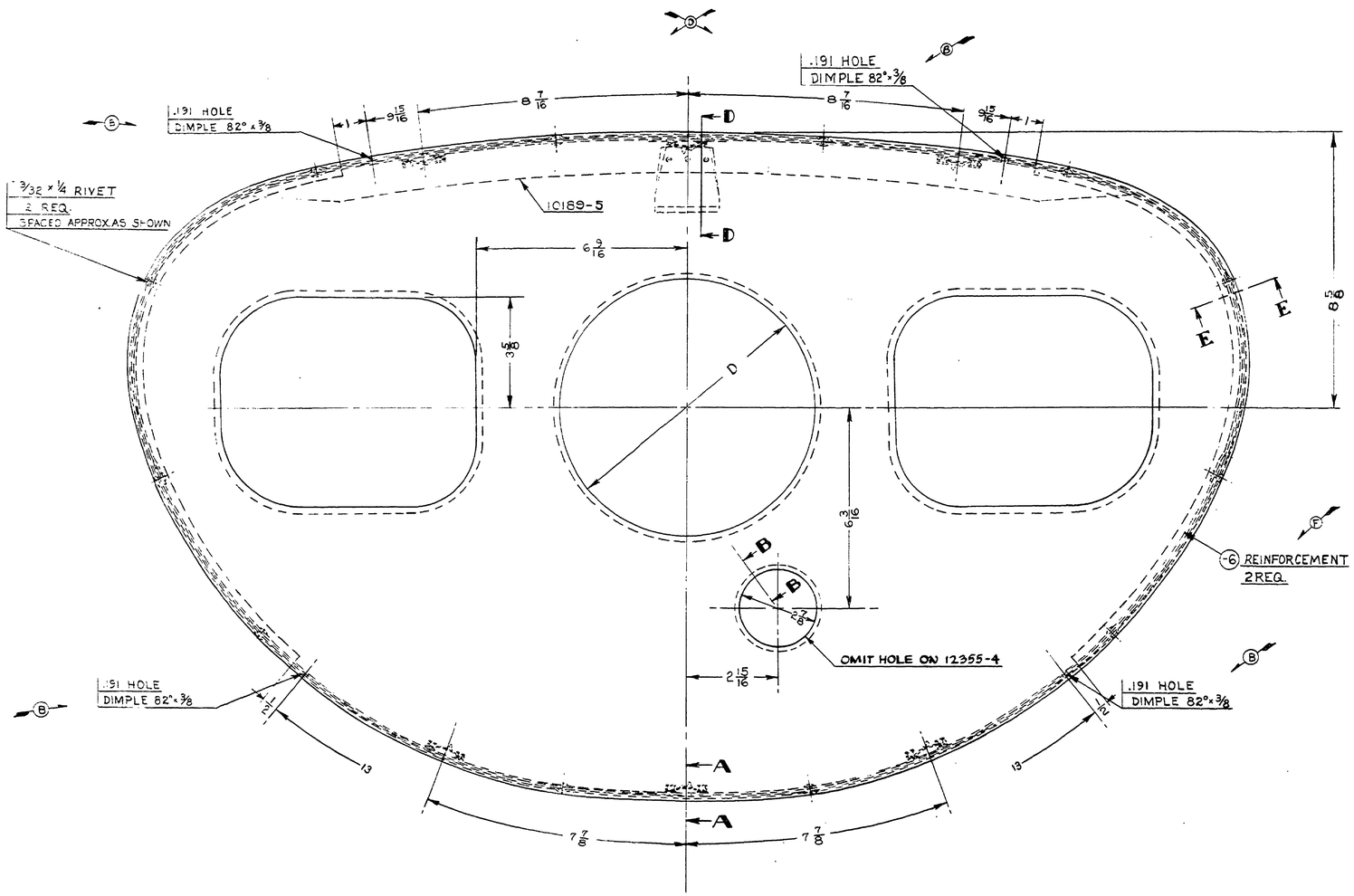

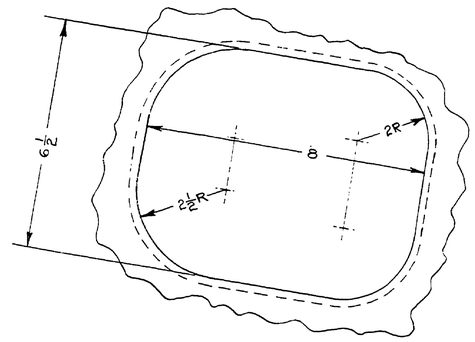



SECTION E-E
FULL SIZE

VIEW C-C

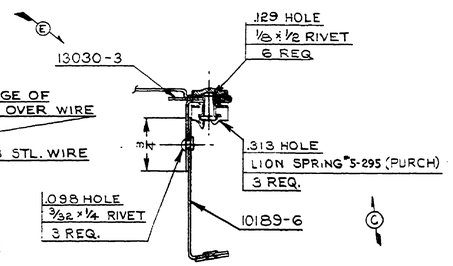

SECTION B-B
FULL SIZE
TYPICAL BEAD

SECTION D-D
FULL SIZE

ASSY. NO.	COWL NO.	D	REMARKS
12355	12355-2	8⅝	
12355-4	12355-5	6⅛	WITH 2⅜ HOLE OMITTED

NOTE:
FOR NOSE COWL CONTOUR SEE DWG. 10192.

	REVISION	DATE	BY
F	-6 ADDED	11-7-50	HRK
E	-3 CANCELLED; WEBBING, 13030-2 & 13030-3 ADDED; JOGGLE REVISED	9-29-50	HRK
D	8⅝ WAS 8⅞	5-5-50	HRK
C	LION SPRING #S-295 SPECIAL SPRING	4-10-50	C.K.
B	DIMPLE 82° ADDED	3-1-50	C.K.
A	12355-4 & TABLE ADDED	1-26-50	MAC

MODEL PER PLANE | NEXT ASSEMBLY | SUPERSEDES | SUP. BY

THIS DRAWING IS THE PROPERTY OF THE PIPER AIRCRAFT CORP. AND ITS POSSESSION BY UNAUTHORIZED PERSONS SHALL NOT BE CONSTRUED AS PERMISSION TO REPRODUCE FOR SALE IN WHOLE OR IN PART, ANY DEVICES SHOWN THEREON.

PIPER AIRCRAFT CORP.
LOCK HAVEN, PENNA.

PART NO.	No. REQ.	DESCRIPTION	MATERIAL
84521	REF.	CHANNEL SECTION	
-6	2	20½L PIPER SECTION 84521	
	1	1/16 × ½ × 91½	PROCESSED ANTI SQUEAK WEBBING PURCH. UNIFORM HOOD LACE CO.
13030-3	1	STRIP	
13030-2	1	STRIP	
	1	.078 DIA × 84L	"M" 1010 CF STL. WIRE
	12	⅛ × ½	2S ALUM. BR. HD RIVET
	3	3/32 × ¼ L	2S ALUM. BR. HD RIVET
	6	SPRING #S-295 PURCH. LION FASTENERS, INC.	
10189-5	1	ANGLE	
10189-6	1	BRACKET ASS'Y.	
10192	SEE CHART ONLY	NOSE COWL CONTOUR	
-3	1	.040 × 12 × 90	52S-½H ALUM.
-4	1	.040 × 34 × 44	3S-0 ALUM.
-5		SIZE	

SCALE 6 IN = 1 FT + NOTED | TOTAL WT.-LBS.
FINISH-PIPER SPECIFICATION #10
MANUFACTURING PRACTICES-PIPER SPECIFICATION #9

COWL ASSEMBLY-
ENGINE NOSE

DRAFTSMAN	CHECKER	STANDARDS
R.T.M. 6-7-49	H.R.K. 6-17-49	

12355

Philadelphia Blue Print Co. 150 8-1-46

A850

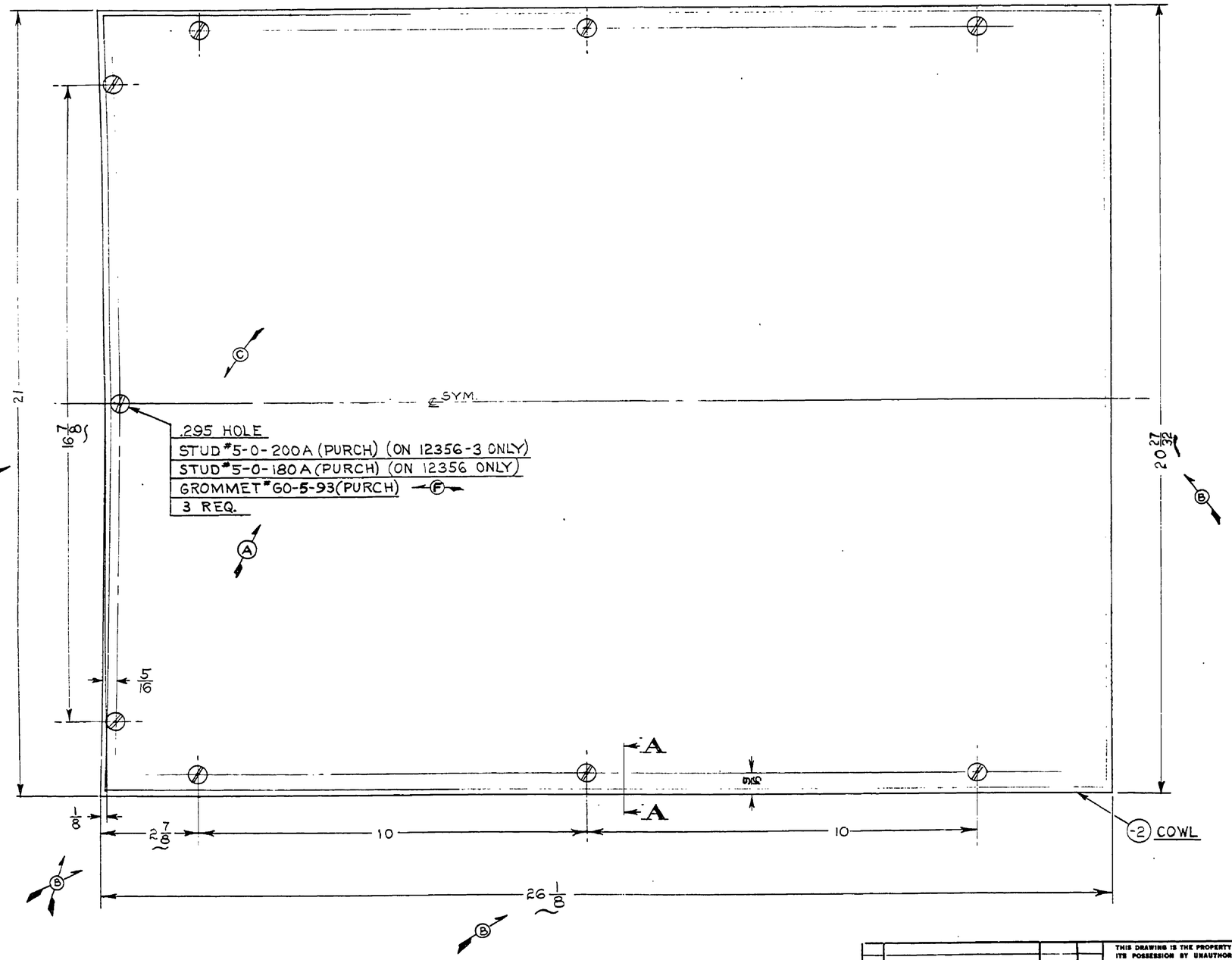

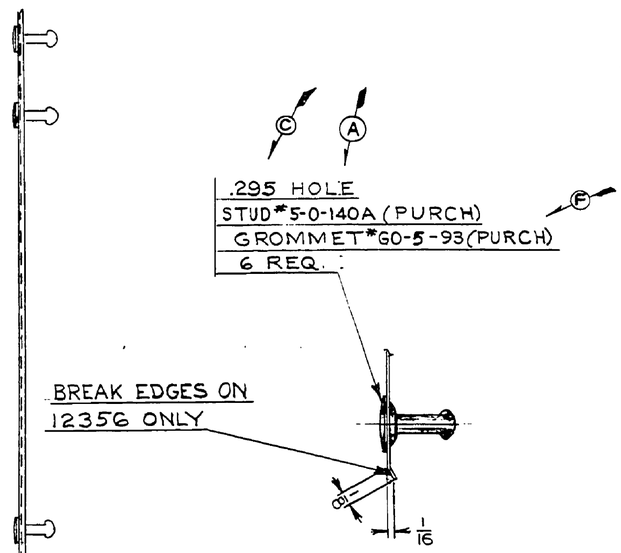

SECTION A A
FULL SIZE

12356 SHOWN & NOTED
12356-3 SHOW & NOTED

	3	STUD #5-0-200A	PURCH. LION	ON 12356-3 ONLY
	3	STUD #5-0-180A	FASTENERS, INC.	ON 12356 ONLY
	6	STUD #5-0-140A	PURCH. LION	
	9	GROMMET #60-5-93	FASTENERS, INC.	
-2	1	.032 × 21 × 26 1/8	525-1/2H ALUM.	

PART No.	No. REQ.	SIZE	DESCRIPTION / MATERIAL

SCALE 6 IN = 1 FT + NOTED — TOTAL WT.—LBS.
FINISH—PIPER SPECIFICATION #10
MANUFACTURING PRACTICES—PIPER SPECIFICATION #9

COWL ASSEMBLY—
ENGINE TOP

LET.	REVISION	DATE	BY
F	60-5-93 WAS 60-3-93	1-8-51	M.G.
E	-4 & TABLE REM.	11-6-50	HRK
D	-3 & -4 ADDED	9-26-50	HRK
C	.295 HOLE WAS .375	8-14-50	HRK
B	16 7/8 WAS 17; 26 1/8 WAS 26; 2 7/8 WAS 2 3/4; 20 27/32 & 1/8 DIM. ADDED	5-5-50	HRK
A	LION FASTENERS WERE IDEAL FASTENERS	4-10-50	C.K.

THIS DRAWING IS THE PROPERTY OF THE PIPER AIRCRAFT CORP. AND ITS POSSESSION BY UNAUTHORIZED PERSONS SHALL NOT BE CONSTRUED AS PERMISSION TO REPRODUCE FOR SALE, IN WHOLE OR IN PART, ANY DEVICES SHOWN THEREON.

MODEL	PER PLANE	NEXT ASSEMBLY	SUPERSEDES	SUP. BY

PIPER AIRCRAFT CORP.
LOCK HAVEN, PENNA.

R.T.M.	H.R.K.		
5-17-49	5-23-49		
DRAFTSMAN	CHECKER	STANDARDS	12356

743

A743

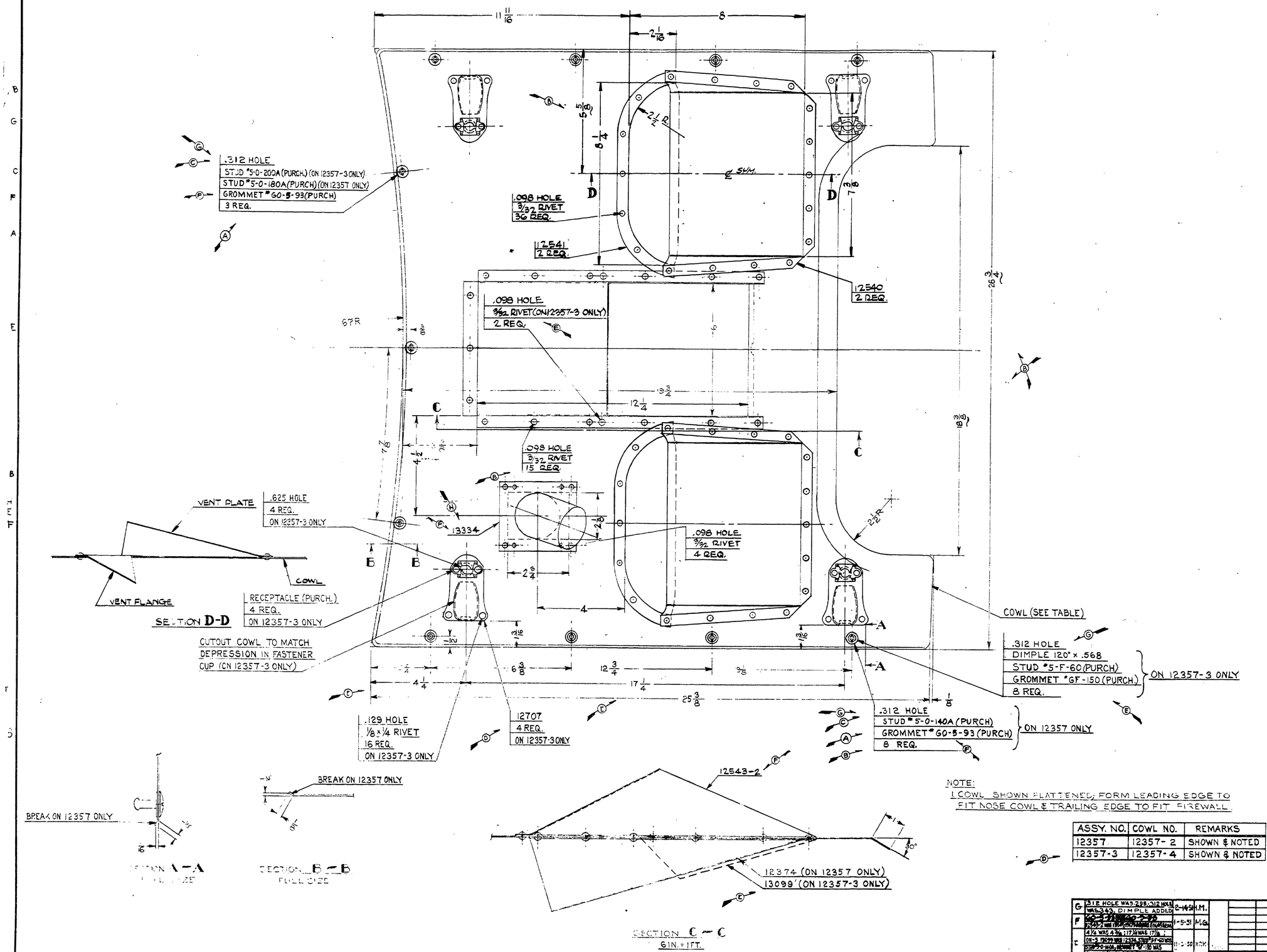

NOTE:
1. COWL SHOWN FLATTENED; FORM LEADING EDGE TO FIT NOSE COWL & TRAILING EDGE TO FIT FIREWALL.

ASSY. NO.	COWL NO.	REMARKS
12357	12357-2	SHOWN & NOTED
12357-3	12357-4	SHOWN & NOTED

PART No.	No. REQ.	MATERIAL	
	8	GROMMET #GF-150	PURCH. LION FASTENERS INC.
	8	STUD #5-F-60	
	3	GROMMET #60-5-93	
	57	3/32 x 1/4 2S ALUM. BR. HD. RIVET	ON 12357-3 ONLY
13099	1	SCOOP	
	16	1/8 x 1/4 L 2S ALUM. BR. HD. RIVET	
	4	RECEPTACLE #99947-P130 PURCH. UNITED CARR FASTENER CORP.	
12707	4	COWL FASTENER CUP	
	3	STUD #5-0-200A PURCH. LION FASTENERS, INC.	
13334	1	SCOOP ASS'Y.	
12541	2	VENT FLANGE	
	55	3/32 x 1/4 2S ALUM. BR. HD. RIVET	ON 12357 ONLY
	11	GROMMET #60-5-93	PURCH. LION FASTENERS INC.
	8	STUD #5-0-140A	
	3	STUD #5-0-180A	
12374	1	SCOOP	
12540	2	VENT PLATE	
12543-2	1	SCOOP	
SEE TABLE	1	[illegible] 52 S 1/4 H ALUM.	

LET.	REVISION	DATE	BY
G	.312 HOLE WAS .295, .312 HOLE WAS .343, DIMPLE ADDED	2-14-51	H.M.
F	[illegible]	1-5-51	M.G.
E	4 1/4 WAS 4 3/8; 17 1/4 WAS 17 7/8; ON-3 13099 WAS 12374, STUD #5-F-60 WAS STUD #5-0-140A, GROMMET #GF-150 WAS GROMMET #60-5-93 & 2 3/32 RIVETS ADD.	11-3-50	HRK
D	-3, -4 & 12707 ADDED	9-26-50	HRK
C	.295 HOLE WAS .375	8-14-50	HRK
B	26 3/4 WAS 27; 18 3/4 WAS 18 1/4; 5 3/8 WAS 5 1/8; 15 REQ. WAS 12	5-5-50	HRK
A	LION FASTENERS INC. 2S ALUM. FASTENERS	4-10-50	C.K.

LET.	REVISION	DATE	BY
H	13334 WAS 13173	3-23-51	H.M.

MODEL	PER PLANE	NEXT ASSEMBLY	SUPERSEDES	SUP. BY

THIS DRAWING IS THE PROPERTY OF THE PIPER AIRCRAFT CORP. AND ITS PROCESSION BY UNAUTHORIZED PERSONS SHALL NOT BE CONSTRUED AS PERMISSION TO REPRODUCE FOR SALE, IN WHOLE OR IN PART, ANY DEVICES SHOWN THEREON.

PIPER AIRCRAFT CORP.
LOCK HAVEN, PENNA.

SCALE: [illegible] NOTED | TOTAL WT.—LBS.
FINISH—PIPER SPECIFICATION #10
MANUFACTURING PRACTICES—PIPER SPECIFICATION #9

COWL ASSEMBLY
ENGINE BOTTOM

DRAFTSMAN: [illegible] | CHECKER: H.R.K. | STANDARDS: [illegible]

12357

A851

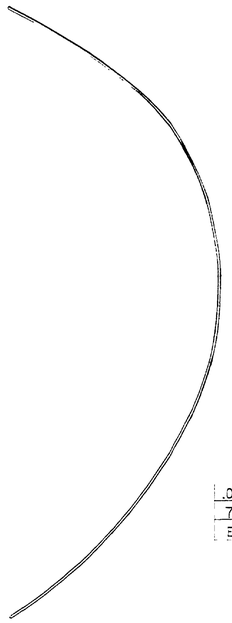

FIG. 1
LEADING EDGE FORMED TO FIT NOSE COWL

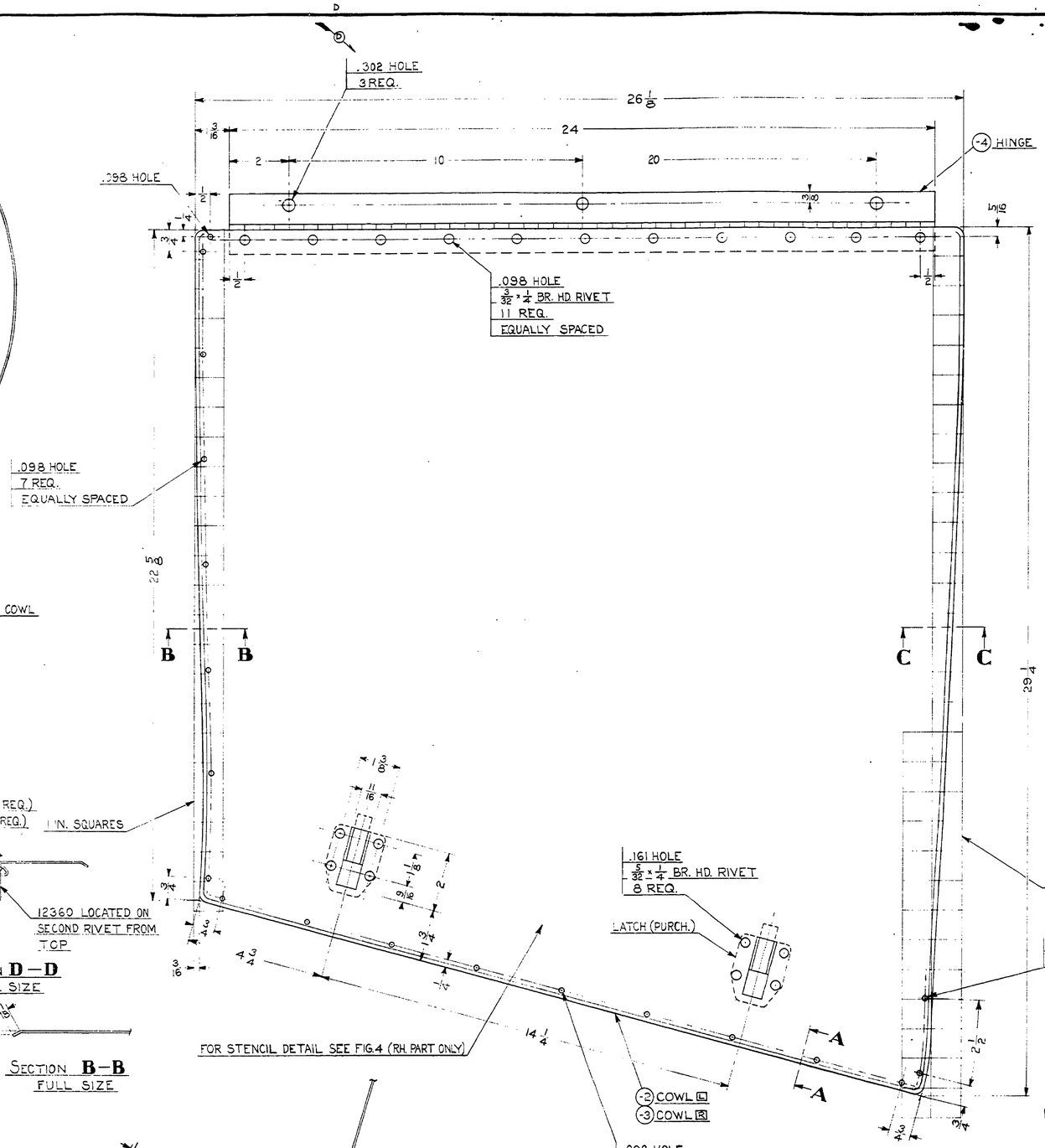

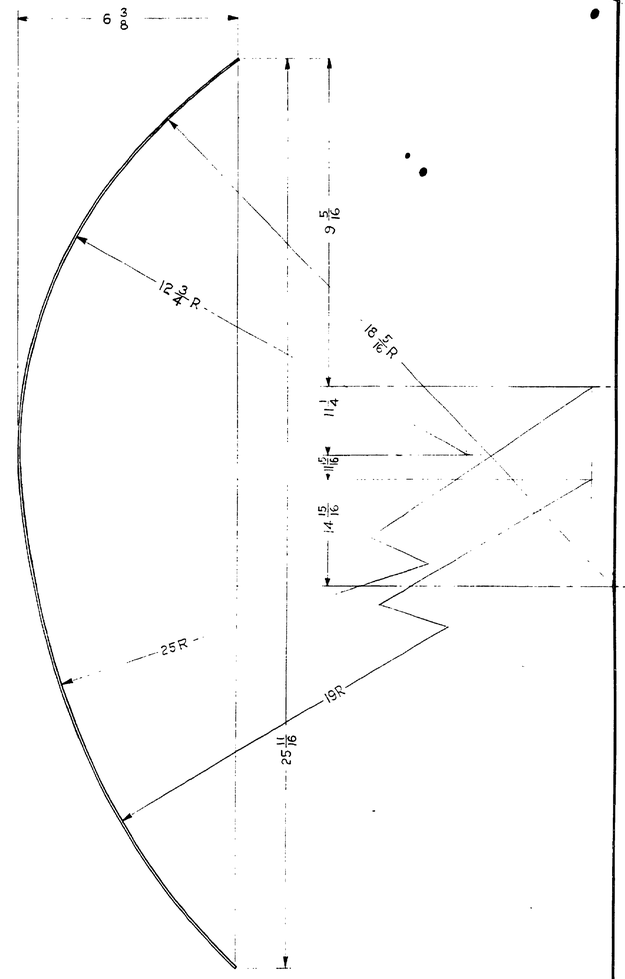

FIG. 2
TRAILING EDGE FORMING DETAILS

FIG. 3
REINFORCEMENT INST.
3 IN. = 1 FT.

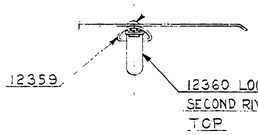

SECTION D—D
FULL SIZE

SECTION B—B
FULL SIZE

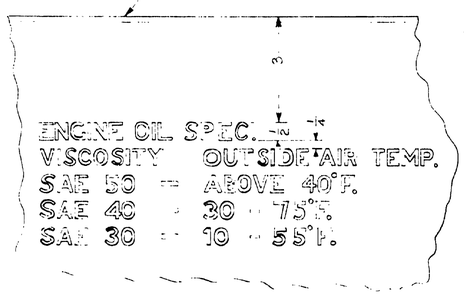

FIG. 4
STENCIL DETAIL
CENTER STENCIL ON INSIDE SURFACE OF RIGHT COWL

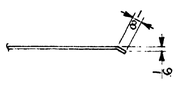

SECTION C—C
FULL SIZE

SECTION A—A
FULL SIZE

NOTE:
1. COWL SHOWN FLATTENED.
2. PARTS MARKED [L] USED ON LEFT ASSEMBLY ONLY.
3. PARTS MARKED [R] USED ON RIGHT ASSEMBLY ONLY

12358 L.H. SHOWN
12358-1 R.H. OPPOSITE

PART NO.	NO. REQ.	SIZE	DESCRIPTION MATERIAL
	1	3/32 x 3/8 L	
	19	3/32 x 1/4 L	2S ALUM. BR. HD. RIVET
	8	5/32 x 1/4 L	
	2		LATCH # H-4700-.125-.250 PURCH. HARTWELL AVIAT ON SUPPLY CO.
12360	1		STUD
12359	1		CHANNEL
-4	1	24 LONG	HINGE SECTION AN251-3
-3	1	.032 x 26 3/8 x 28 1/4	52S-½ H. ALUM.
-2	1	.032 x 26 3/8 x 28 1/4	52S-½ H. ALUM.

SCALE 6 IN. = 1 FT & NOTED — TOTAL WT.—LBS.
FINISH—PIPER SPECIFICATION #10
MANUFACTURING PRACTICES—PIPER SPECIFICATION #9

LET	REVISION	DATE	BY
E	AN251-3 WAS 10812	2-26-51	MG
D	.302 HOLE WAS .313	8-14-50	HRK
C	REDRAWN & REVISED	5-19-50	HRK

MODEL PER PLANE — NEXT ASSEMBLY — SUPERSEDES — SUP. BY

THIS DRAWING IS THE PROPERTY OF THE PIPER AIRCRAFT CORP. AND ITS POSSESSION BY UNAUTHORIZED PERSONS SHALL NOT BE CONSTRUED AS PERMISSION TO REPRODUCE FOR SALE, IN WHOLE OR IN PART, ANY DEVICES SHOWN THEREON.

PIPER AIRCRAFT CORP.
LOCK HAVEN, PENNA.

COWL ASSEMBLY—ENGINE SIDE

H. R. K.	C. E. K.		
5-19-50	5-22-50		
DRAFTSMAN	CHECKER	STANDARDS	**12358**

Philadelphia Blue Print Co. 150 8-1-46

A852

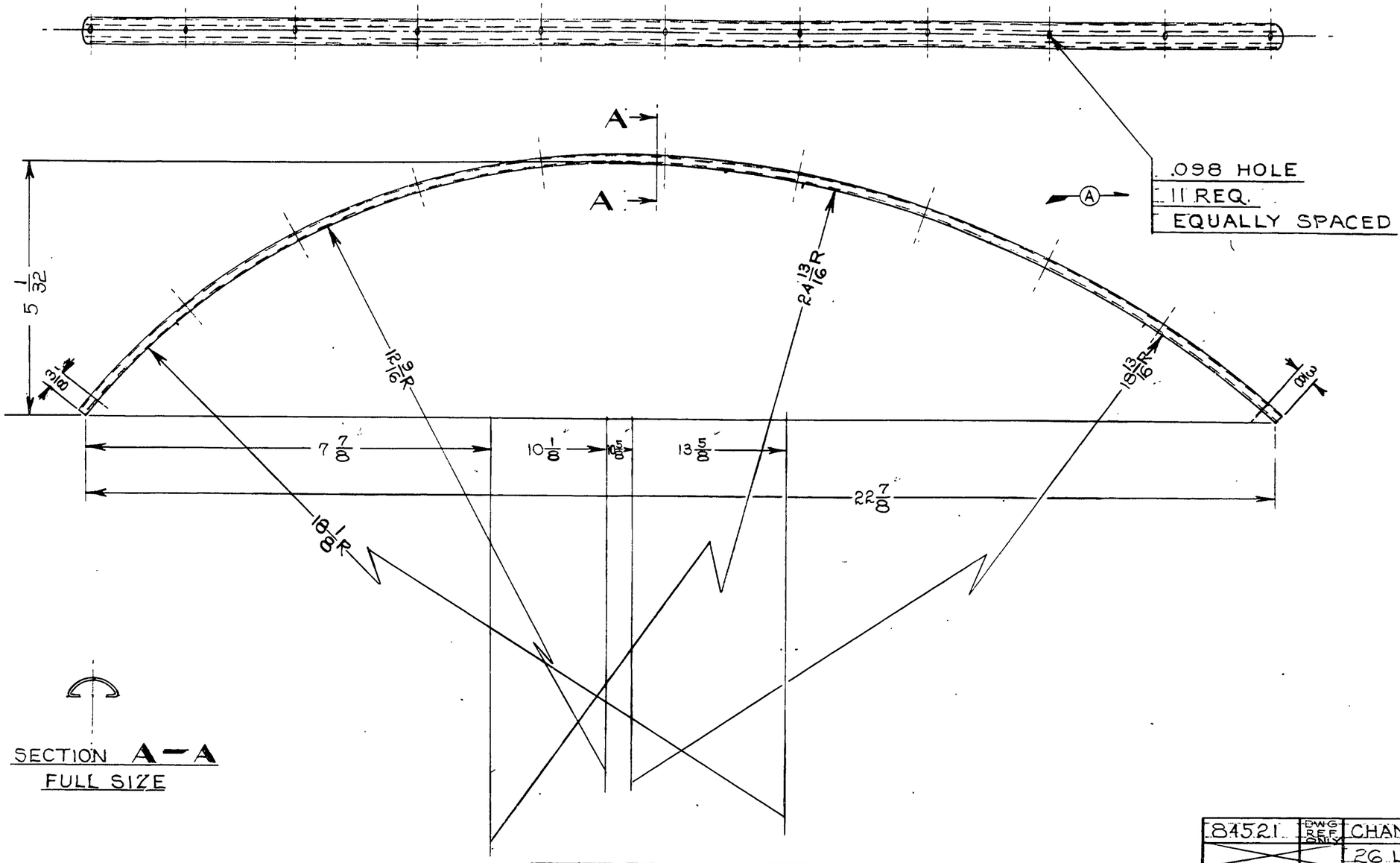

SECTION A—A
FULL SIZE

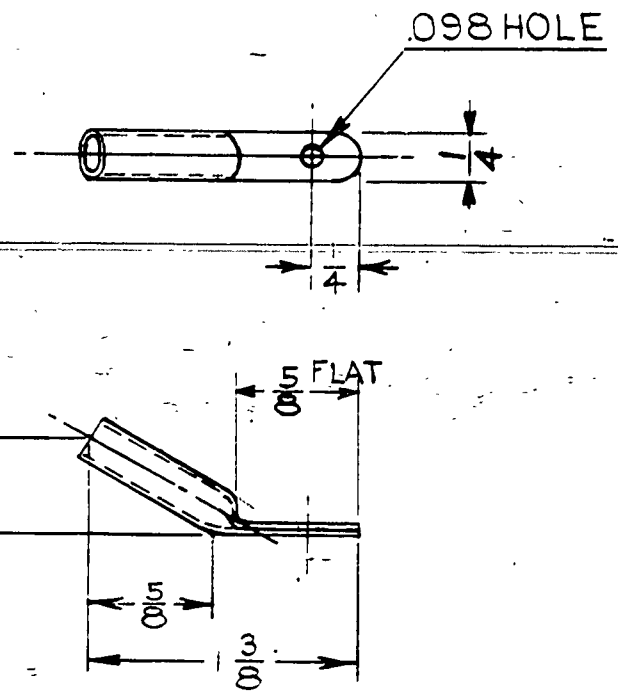

LET.	REVISION	DATE	BY	MODEL	PER PLANE	NEXT ASSEMBLY	SUPERSEDES	SUP. BY	

THIS DRAWING IS THE PROPERTY OF THE PIPER AIRCRAFT CORP. AND ITS POSSESSION BY UNAUTHORIZED PERSONS SHALL NOT BE CONSTRUED AS PERMISSION TO REPRODUCE FOR SALE, IN WHOLE OR IN PART, ANY DEVICES SHOWN THEREON.

PIPER AIRCRAFT CORP.
LOCK HAVEN, PENNA.

PART No.	No. REQ.	SIZE	DESCRIPTION / MATERIAL
		1/4 x .028 x 1 1/2	#1025 STL. TUBE

SCALE FULL SIZE — TOTAL WT.–LBS.

FINISH–PIPER SPECIFICATION #10

MANUFACTURING PRACTICES–PIPER SPECIFICATION #9

STUD-COWL STOP

DRAFTSMAN	CHECKER	STANDARDS
R.T.M. 5-19-49	H.R.K. 5-23-49	

12360

12360

109

A 109

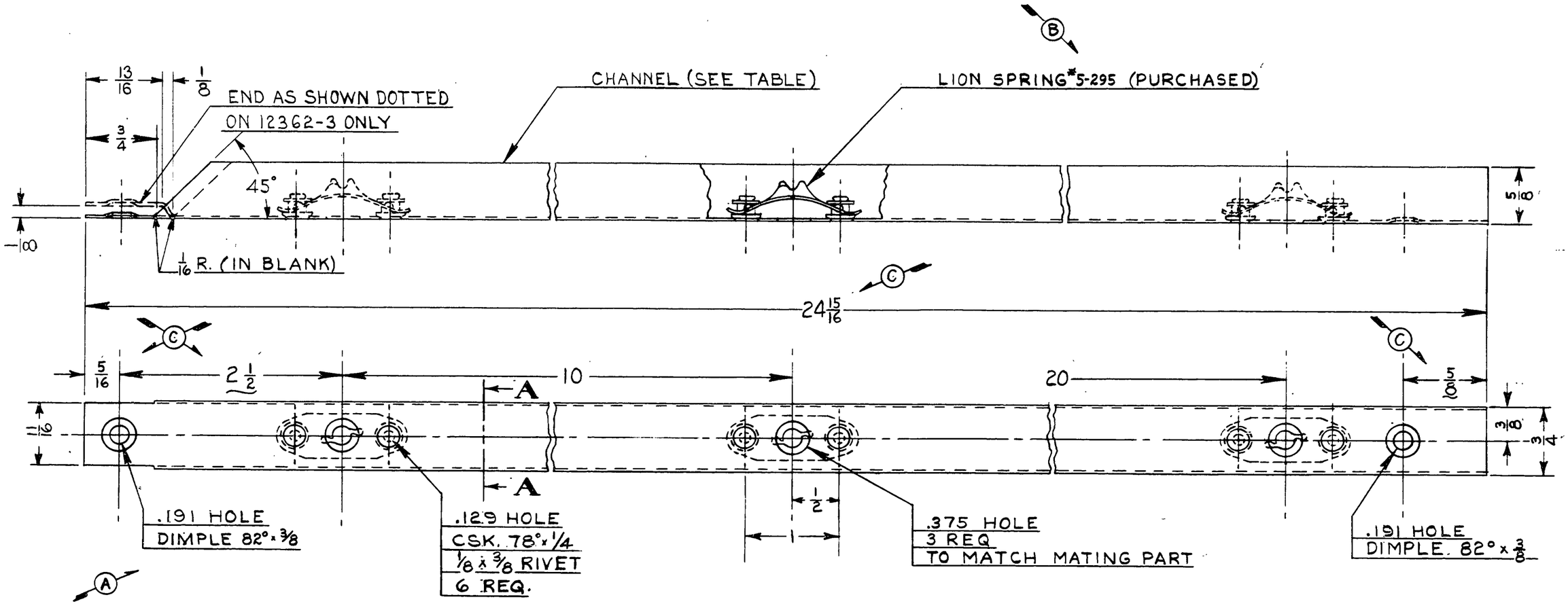

ASSY. NO.	CHANNEL NO.	REMARKS
12362	12362-2	AS SHOWN
12362-3	12362-4	WITH END AS SHOWN DOTTED

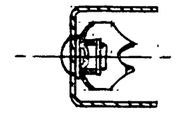

SECTION A-A

LET.	REVISION	DATE	BY
D	-3 & -4 ADDED	9-22-50	HRK
C	2 1/2 WAS 2 3/8; 5/16 WAS 3/8; 24 15/16 WAS 24 7/8; 5/8 WAS 7/8	5-17-50	C.K.
B	LION SPRING WAS IDEAL SPRING	4-10-50	C.K.
A	"DIMPLE 82° x 3/8" ADDED	3-1-50	C.K.

MODEL	PER PLANE	NEXT ASSEMBLY	SUPERSEDES	SUP. BY

THIS DRAWING IS THE PROPERTY OF THE PIPER AIRCRAFT CORP. AND ITS POSSESSION BY UNAUTHORIZED PERSONS SHALL NOT BE CONSTRUED AS PERMISSION TO REPRODUCE FOR SALE, IN WHOLE OR IN PART, ANY DEVICES SHOWN THEREON.

PIPER AIRCRAFT CORP.
LOCK HAVEN, PENNA.

PART No.	No. REQ.	SIZE	DESCRIPTION / MATERIAL
	3		LION SPRING #5-295 PURCH. LION FASTENERS INC.
	6	1/8 x 3/8	2S ALUM. CSK. HD. RIVET
SEE TABLE	1	.032 x 2 x 24 15/16	#1025 STL.

SCALE FULL SIZE — TOTAL WT.—LBS.

FINISH—PIPER SPECIFICATION #10

MANUFACTURING PRACTICES—PIPER SPECIFICATION #9

CHANNEL ASSEMBLY— COWL UPPER MOUNTING

DRAFTSMAN	CHECKER	STANDARDS
R. REEDER 6-6-49	H.R.K. 6-15-49	

12362

512

A 512

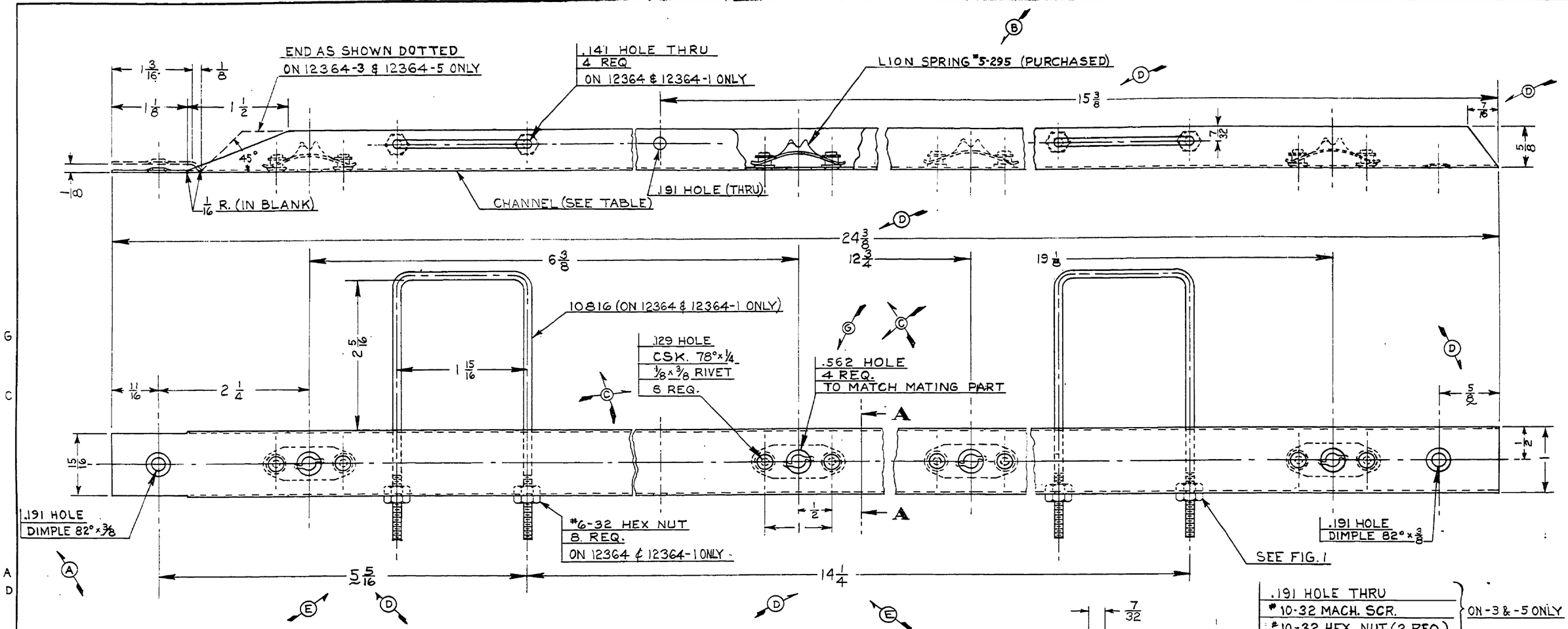

ASSY. NO.	CHANNEL NO.	
12364	12364-2	L. H. SHOWN
12364-1	12364-2	R. H. OPPOSITE
12364-3	12364-4	L. H. SHOWN
12364-5	12364-4	R. H. OPPOSITE

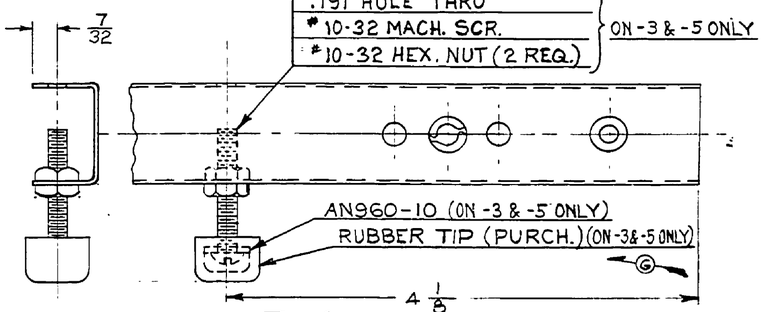

FIG. 1

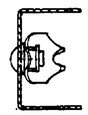

SECTION A-A

NOTE:
1. BEND RADII ARE 1/32

	1	RUBBER TIP #285 PURCH. ROCKWOOD MFG. CO.	ON
AN960-10	1	WASHER	12364-3
#10-32	2	HEX. NUT	& 12364-5
#10-32	1	1¼ L. RD HD. MACH. SCR.	ONLY
	4	LION SPRING #5-295 PURCH. LION FASTENERS INC.	
	8	1/8 x 3/8 L.	2S ALUM CSK. HD. RIVET
#6-32	8	#1010 STL. CD. PLATED HEX. NUT (ON 12364 & 12364-1 ONLY)	
10816	2	CATCH (ON 12364 & 12364-1 ONLY)	
SEE TABLE	1	.032 x 2 1/4 x 24 3/8	#1025 STL.
PART NO.	NO. REQ.	SIZE	DESCRIPTION
		MATERIAL	

SCALE FULL SIZE — TOTAL WT.—LBS.
FINISH—PIPER SPECIFICATION #10
MANUFACTURING PRACTICES—PIPER SPECIFICATION #9

LET.	REVISION	DATE	BY
G	-5 & RUBBER TIP ADD.; .562 HOLE WAS .375	11-6-50	HRK
F	-3 & -4 ADDED	9-25-50	HRK
E	14-1/4 WAS 14 3/16; 5 5/16 WAS 5	8-10-50	K.B.
D	5 WAS 5 1/16; 14 3/16 WAS 14 1/16; 7/8 WAS 7/8; 24 3/8 WAS 24 5/16; 15 3/8 WAS 15 1/2; 7/16 ADDED	5-17-50	C.K.
C	6 3/8 WAS 6 3/16; 12 3/4 & LION SPRING ADDED; 8 REQ. WAS 6; 4 REQ. WAS 3	5-8-50	HRK
B	LION SPRING WAS IDEAL SPRING	4-10-50	C.K.
A	DIMPLE 82° x 3/8 ADDED	3-1-50	C.K.

THIS DRAWING IS THE PROPERTY OF THE PIPER AIRCRAFT CORP. AND ITS POSSESSION BY UNAUTHORIZED PERSONS SHALL NOT BE CONSTRUED AS PERMISSION TO REPRODUCE FOR SALE, IN WHOLE OR IN PART, ANY DEVICES SHOWN THEREON

MODEL	PER PLANE	NEXT ASSEMBLY	SUPERSEDES	SUP. BY

PIPER AIRCRAFT CORP.
LOCK HAVEN, PENNA.

CHANNEL ASSEMBLY—
COWL LOWER MOUNTING

DRAFTSMAN	CHECKER	STANDARDS
R. REED 6-7-49	H. R. K. 6-15-49	

12364

A744

.191 HOLE
4 REQ.

1.250 HOLE

.191 HOLE
3 REQ.
TO MATCH MATING
PART

.191 HOLE

1.250 HOLE

11422

.625 HOLE

& SYM. EXCEPT
AS NOTED

.191 HOLE
3 REQ.

.191 HOLE

.141 HOLE

.129 HOLE
1/8 RIVET
2 REQ.

.625 HOLE

.191 HOLE

.141 HOLE

.129 HOLE
39 REQ.
EQUALLY SPACED EXCEPT AS NOTED

-2 FIREWALL

.141 HOLE
3 REQ.
TO MATCH MATING PART

.191 HOLE

.875 HOLE

.191 HOLE
4 REQ.
TO MATCH MATING PART

10792-3
4 REQ.

.191 HOLE

1.000 HOLE

.098 HOLE
3/32 RIVET
8 REQ.

.191 HOLE
4 REQ.

.438 HOLE
4 REQ.

SECTION A-A
FULL SIZE

	NO. REQ.	SIZE	DESCRIPTION
	2	1/8 × 1/2	2S ALUM. BR HD. RIVET
	8	3/32 × 9/64	STL. TUBULAR CAD. PLATED RIVET
11422	1	PLATE	
10792-3	4	REINFORCEMENT	
-2	1	.0156 × 27¼ × 30¼	TYPE #430 ST. STL. ANNEALED 2D FINISH
		.018 × 27¼ × 30¼	ALUMINIZED H.R. STEEL

PART NO. — MATERIAL

SCALE GIN. = 1 FT. & NOTED — TOTAL WT.—LBS.

FINISH—PIPER SPECIFICATION #10

MANUFACTURING PRACTICES—PIPER SPECIFICATION #8.

THIS DRAWING IS THE PROPERTY OF THE PIPER AIRCRAFT CORP. AND ITS POSSESSION BY UNAUTHORIZED PERSONS SHALL NOT BE CONSTRUED AS PERMISSION TO REPRODUCE FOR SALE, IN WHOLE OR IN PART, ANY DEVICES SHOWN THEREON.

LET.	REVISION	DATE	BY
D	.625 HOLE & DIMS ADDED; 2 WAS 2¼	8-23-51	I.M.M.
C	35° ADDED; ½ DIM REM.; ¾ WAS 7/8	8-1-50	K.D
B	.625 HOLE ADDED	6-16-50	RAC
A	18 3/4 WAS 18 7/8	5-5-50	HRK

MODEL | PER PLANE | NEXT ASSEMBLY | SUPERSEDES | SUP. BY

PIPER AIRCRAFT CORP.
LOCK HAVEN, PENNA.

FIREWALL ASSEMBLY

DRAFTSMAN	CHECKER	STANDARDS
H. R. K. 5-19-49	C. E. K. 6-17-49	

12365

A745

B

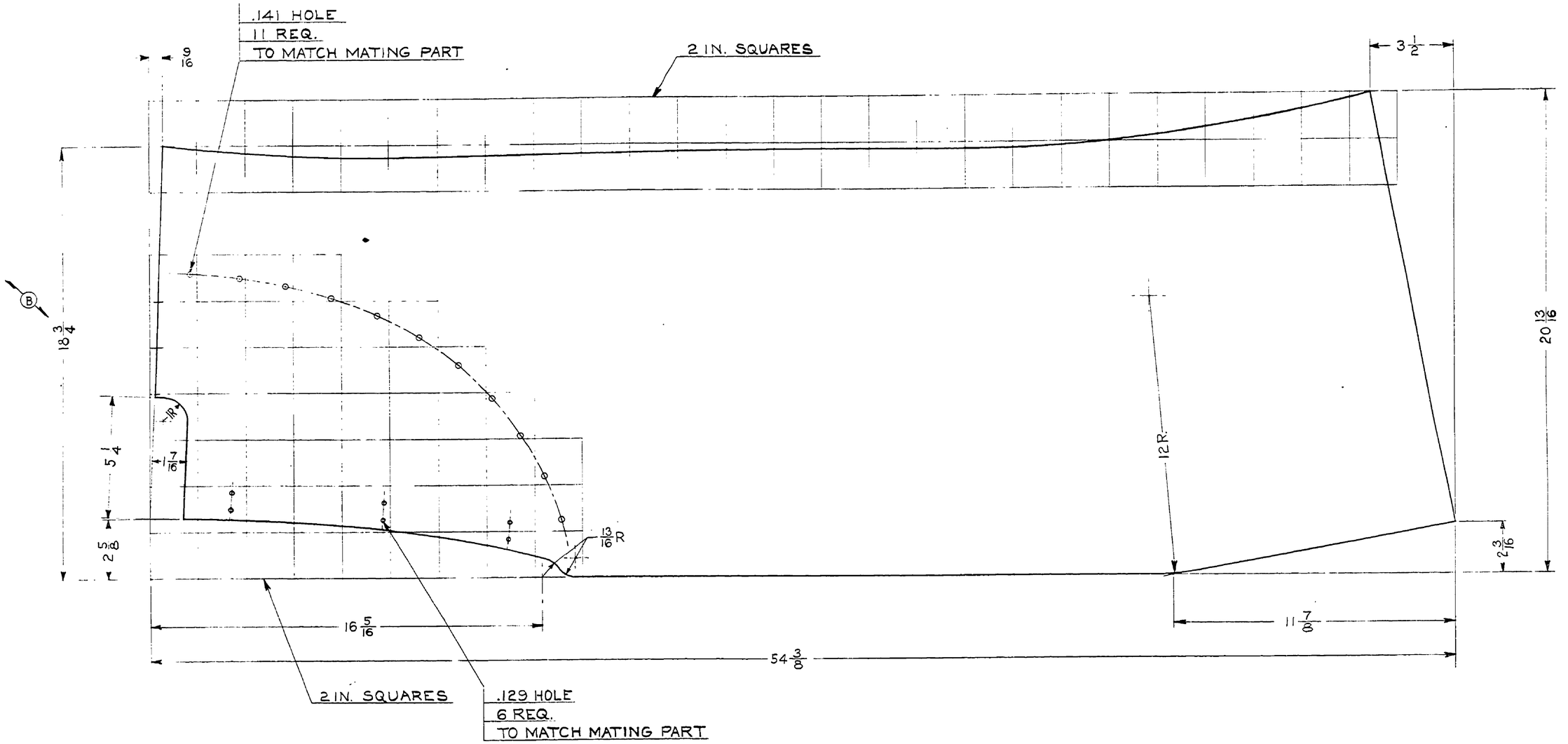

THIS DRAWING IS THE PROPERTY OF THE PIPER AIRCRAFT CORP. AND ITS POSSESSION BY UNAUTHORIZED PERSONS SHALL NOT BE CONSTRUED AS PERMISSION TO REPRODUCE FOR SALE, IN WHOLE OR IN PART. ANY DEVICES SHOWN THEREON

LET.	REVISION	DATE	BY
B	18 3/4 WAS 18 3/8	9-15-50	K.D.
A	REDRAWN & REVISED	5-17-50	HK

MODEL	PER PLANE	NEXT ASSEMBLY	SUPERSEDES	SUP. BY

PIPER AIRCRAFT CORP.
LOCK HAVEN, PENNA.

PART No.	NO. REQ.	SIZE	DESCRIPTION
		.020 × 20 13/16 × 54 3/8	3S-½ H. ALUM.
		MATERIAL	

SCALE 4 IN. = 1 FT. — TOTAL WT.—LBS.

FINISH—PIPER SPECIFICATION #10

MANUFACTURING PRACTICES—PIPER SPECIFICATION #9

COWL—FUSELAGE

DRAFTSMAN	CHECKER	STANDARDS
H. R. K. 5-17-49	C. E. K. 5-22-50	

12366

A746

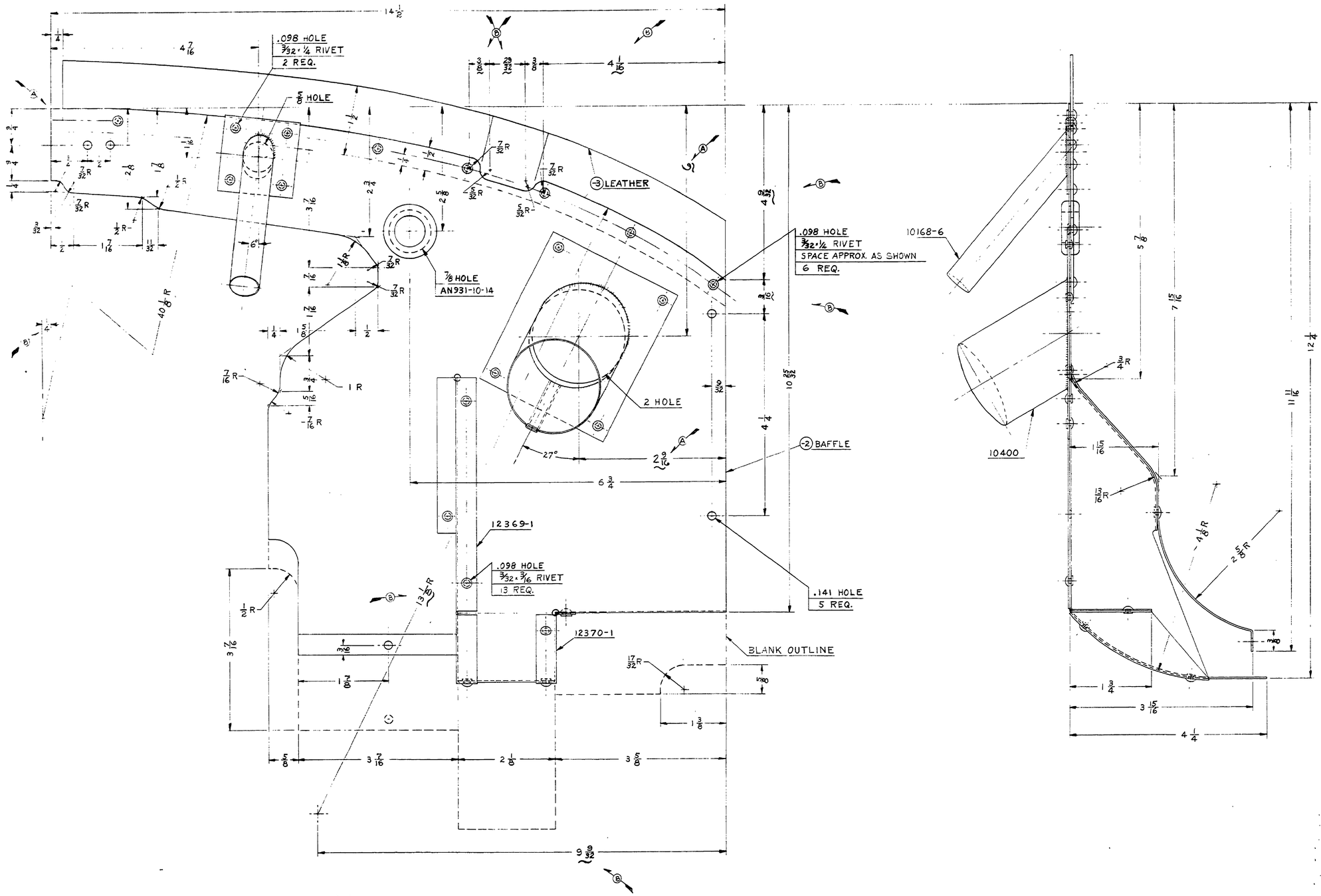

PART No.	No. REQ.	SIZE	DESCRIPTION
	8	3/32 × 1/4 L.	2S ALUM. BR. HD. RIVET
	13	3/32 × 3/16 L.	2S ALUM. BR. HD. RIVET
AN931-10-14	1	GROMMET	
12370-1	1	PLATE	
12369-1	1	PLATE	
10400	1	TAKE-OFF ASSY.	
10168-6	1	TUBE ASSY.	
-3	1	1/16 × 5 1/4 × 14 1/4	GENUINE LEATHER #1MB
-2	1	.032 × 4 1/2 × 15 7/16	3S-1/2 H. ALUM.

MATERIAL

SCALE FULL SIZE — TOTAL WT.—LBS.

FINISH—PIPER SPECIFICATION #10

MANUFACTURING PRACTICES—PIPER SPECIFICATION #8

LET.	REVISION	DATE	BY
B	DIM. REVISED	11-15-50	HRK
A	CORNER REVISED; 6 WAS 4 3/8, 2 5/8 WAS 3 1/16	1-11-50	MG.

MODEL | PER PLANE | NEXT ASSEMBLY | SUPERSEDES | SUP. BY

THIS DRAWING IS THE PROPERTY OF THE PIPER AIRCRAFT CORP. AND ITS POSSESSION BY UNAUTHORIZED PERSONS SHALL NOT BE CONSTRUED AS PERMISSION TO REPRODUCE FOR SALE, IN WHOLE OR IN PART, ANY DEVICES SHOWN THEREON.

PIPER AIRCRAFT CORP.
LOCK HAVEN, PENNA.

BAFFLE ASSEMBLY—
ENGINE RIGHT REAR

DRAFTSMAN	CHECKER	STANDARDS
C. E. K. 5-20-49	H. R. K. 5-24-49	

12367

Philadelphia Blue Print Co. 150 8-1-46

A853

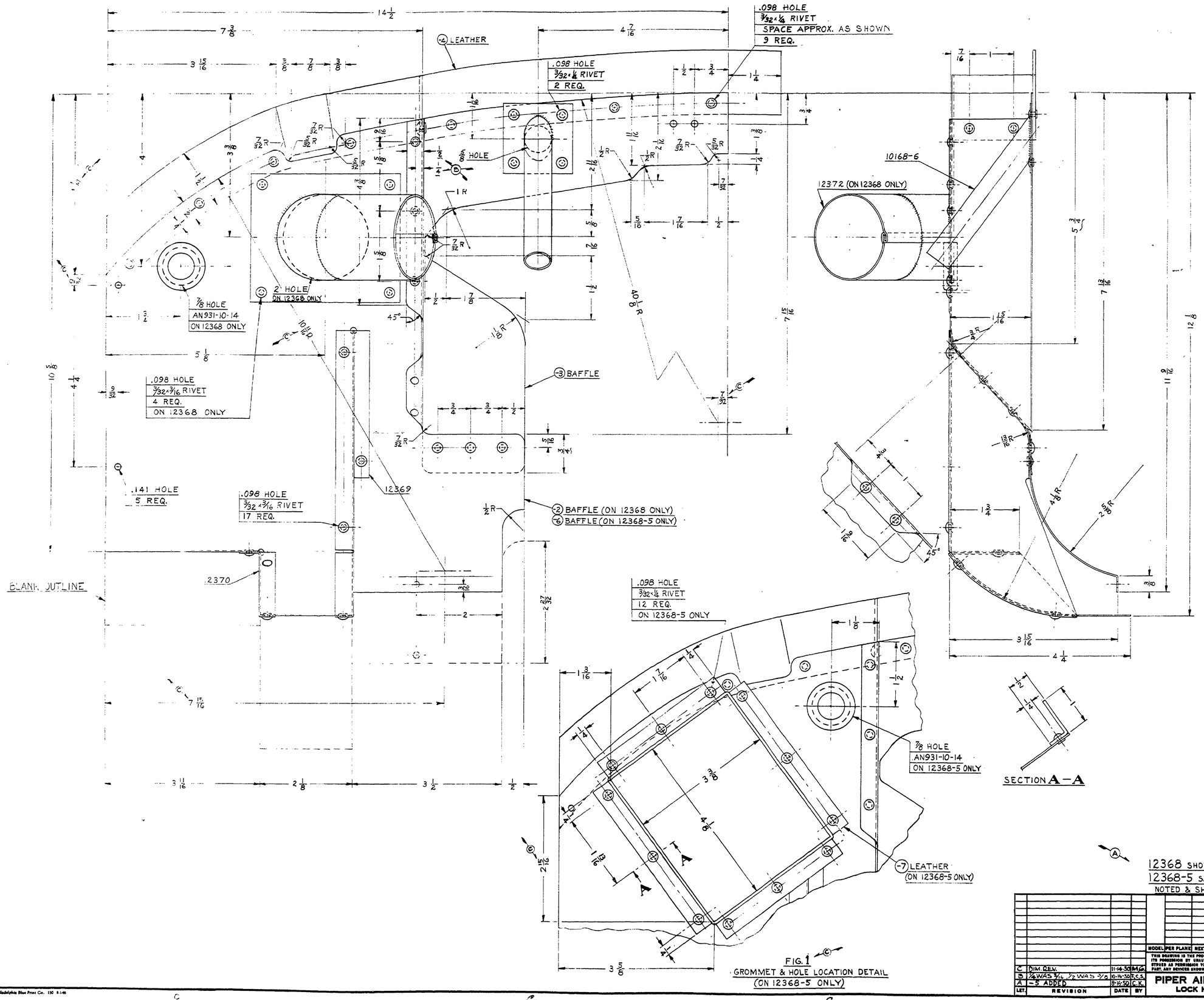

FIG. 1
GROMMET & HOLE LOCATION DETAIL
(ON 12368-5 ONLY)

	11	3/32 x 1/4	2SALUM. BR.HD.RIVET	ON 12368 ONLY
	23			ON 12368-5 ONLY
-6	1	.032 x 9 3/32 x 14 1/16	35-1/2H ALUM.	ON 12368-5 ONLY
-2				ON 12368 ONLY
	17	3/32 x 3/16	2SALUM BR.HD. RIVET	ON 12368-5 ONLY
	21			ON 12368 ONLY
AN931-10-14	1	GROMMET		
12372	1	TAKE-OFF ASSY. (ON 12368 ONLY)		
12370	1	PLATE		
12369	1	PLATE		
10168-6	1	TUBE ASSY		
-4	1	1/16 x 5 3/8 x 17 3/4	6 GENUINE LEATHER IMB	
-3	1	.032 x 8 5/8 x 9 3/16	35-1/2 H. ALUM.	
-7	1	1/8 x 11 x 15	GENUINE LEATHER IMB (ON 12368-5 ONLY)	
	NO. REQ.	SIZE	DESCRIPTION	

12368 SHOWN
12368-5 SAME EXCEPT AS NOTED & SHOWN IN FIG. 1

LET.	REVISION	DATE	BY
C	DIM. REV.	11-14-50	M.G.
B	1/4 WAS 5/16, 1/2 WAS 5/8	10-16-50	C.K.
A	-5 ADDED	8-16-50	C.K.

MODEL | PER PLANE | NEXT ASSEMBLY | SUPERSEDES | SUP. BY

THIS DRAWING IS THE PROPERTY OF THE PIPER AIRCRAFT CORP. AND ITS POSSESSION BY UNAUTHORIZED PERSONS SHALL NOT BE CONSTRUED AS PERMISSION TO REPRODUCE FOR SALE, IN WHOLE OR IN PART, ANY DEVICES SHOWN THEREON.

PIPER AIRCRAFT CORP.
LOCK HAVEN, PENNA.

PART NO. | MATERIAL
SCALE FULL SIZE | TOTAL WT.—LBS.
FINISH—PIPER SPECIFICATION #10
MANUFACTURING PRACTICES—PIPER SPECIFICATION #9

BAFFLE ASSEMBLY— ENGINE LEFT REAR

DRAFTSMAN	CHECKER	STANDARDS
C.E.K. 5-20-49	H.R.K. 5-24-49	

12368

Philadelphia Blue Print Co. 150 8-1-46

A854

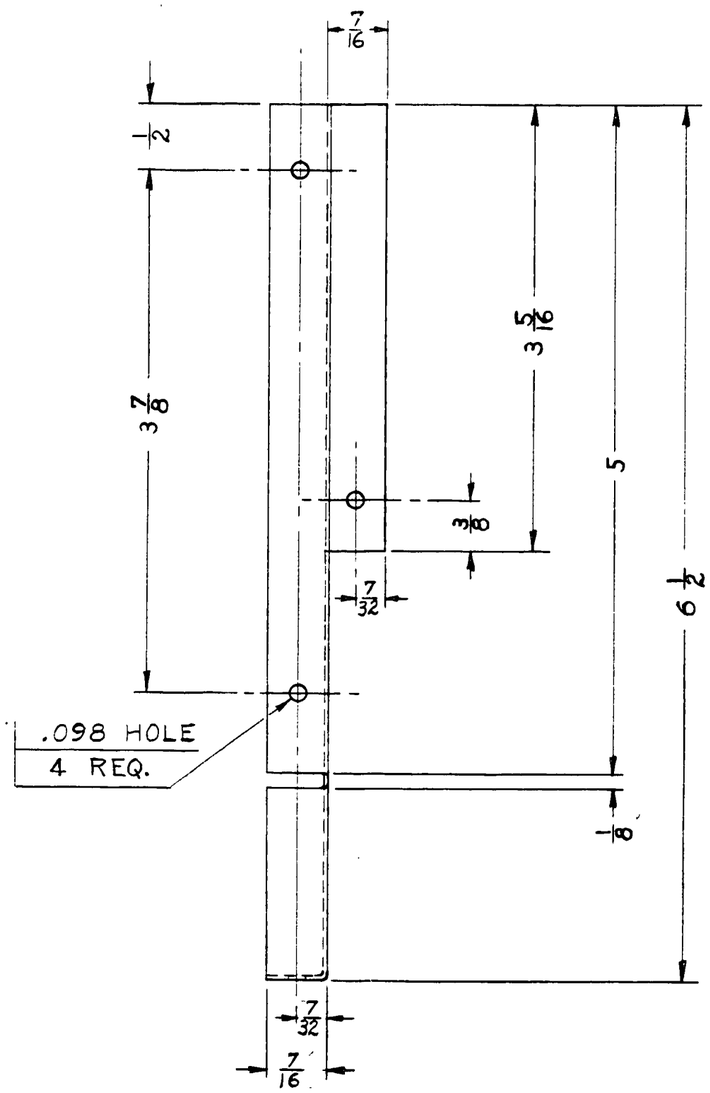

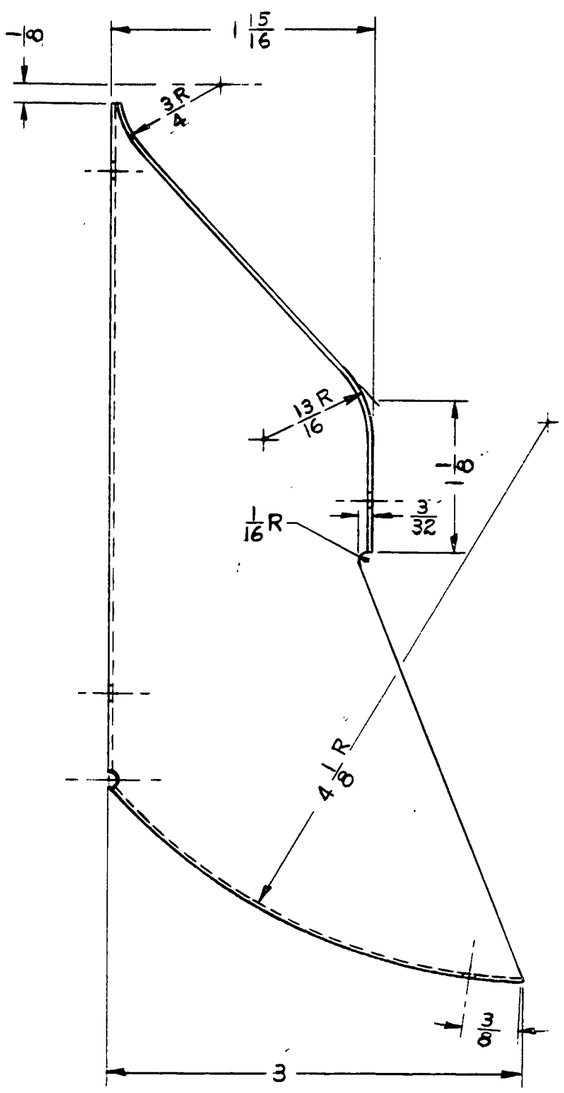

12369 L.H. SHOWN
12369-1 R.H. OPPOSITE

THIS DRAWING IS THE PROPERTY OF THE PIPER AIRCRAFT CORP. AND ITS POSSESSION BY UNAUTHORIZED PERSONS SHALL NOT BE CONSTRUED AS PERMISSION TO REPRODUCE FOR SALE, IN WHOLE OR IN PART, ANY DEVICES SHOWN THEREON

LET.	REVISION	DATE	BY

MODEL	PER PLANE	NEXT ASSEMBLY	SUPERSEDES	SUP. BY

PIPER AIRCRAFT CORP.
LOCK HAVEN, PENNA.

PART No.	No. REQ.	SIZE	MATERIAL
		.032-3 7/16 × 6 15/16	3S-½H ALUM.

SCALE FULL SIZE — TOTAL WT.—LBS.

FINISH—PIPER SPECIFICATION #10

MANUFACTURING PRACTICES—PIPER SPECIFICATION #9

PLATE—ENGINE BAFFLE

DRAFTSMAN	CHECKER	STANDARDS
C. E. K. 5-19-49	H. R. K. 5-24-49	

12369

513

A513

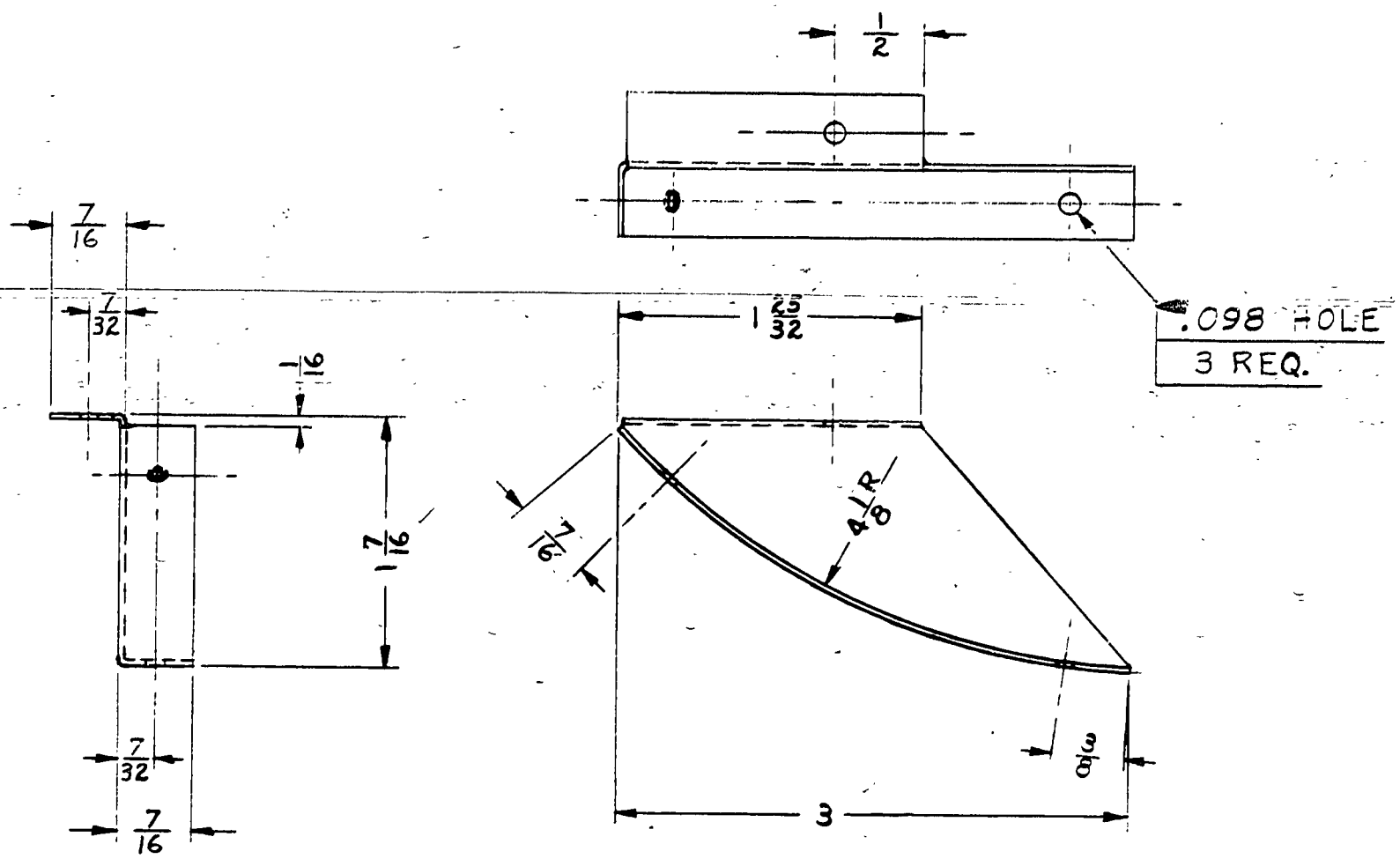

12370 L.H. SHOWN
12370-1 R.H. OPPOSITE

PART No.	No. REQ.	SIZE	MATERIAL / DESCRIPTION
		.032 × 2 5/16 × 3 7/16	3S-½ H. ALUM.

SCALE FULL SIZE — TOTAL WT.—LBS.

FINISH—PIPER SPECIFICATION #10

MANUFACTURING PRACTICES—PIPER SPECIFICATION #9

LET.	REVISION	DATE	BY

MODEL	PER PLANE	NEXT ASSEMBLY	SUPERSEDES	SUP. BY

THIS DRAWING IS THE PROPERTY OF THE PIPER AIRCRAFT CORP. AND ITS POSSESSION BY UNAUTHORIZED PERSONS SHALL NOT BE CONSTRUED AS PERMISSION TO REPRODUCE FOR SALE, IN WHOLE OR IN PART, ANY DEVICES SHOWN THEREON.

PIPER AIRCRAFT CORP.
LOCK HAVEN, PENNA.

PLATE-ENGINE BAFFLE

DRAFTSMAN	CHECKER	STANDARDS
C. E. K. 5-19-49	H. R. K. 5-24-49	

12370

110

A110

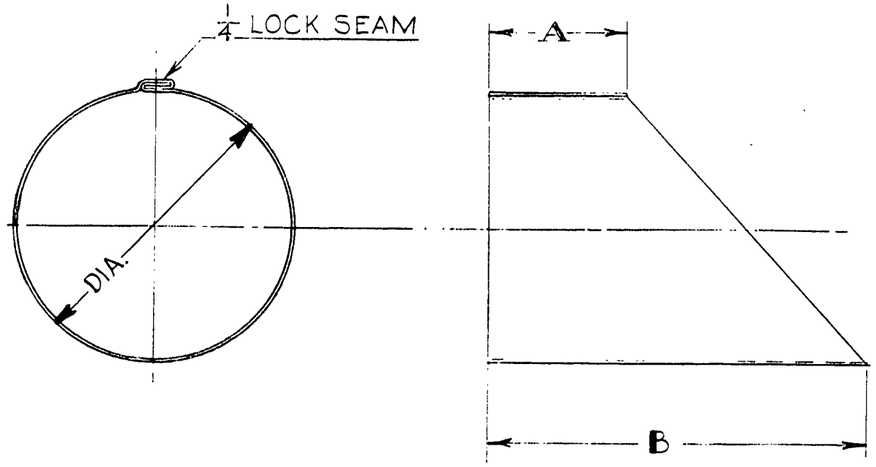

E

PART NO.	A	B	DIA.	MATERIAL	LOCKSEAM LOCATION
12375-2	1	2 3/4	2	.032 3S-1/2H ALUM	———
A 12375-3	1 9/16	2 7/16	2	.032 3S-1/2H. ALUM	INSIDE
12375-4	1 1/16	2 3/4	2 1/8	.032 3S-1/2H. ALUM	OUTSIDE
E 12375-5	3 5/16	5 3/8	2	.032 3S-1/2H. ALUM	INSIDE
12375-6	1 1/8	2 1/2	2 1/16	.032 3S-1/2H. ALUM	———
12375-7	2 1 1/16	4	2 1/16	.032 3S-1/2H. ALUM	———
12375-8	1 17/32	2 11/16	2	.020 H.R. STEEL	———
12375-9	1 1/4	1 1/4	2	.032 3S-1/2H. ALUM.	INSIDE
12375-10	11/16	1 3/4	2	.032 3S-1/2 H. ALUM	INSIDE
12375-11	1 3/8	2 7/16	2	.032 3S-1/2 H. ALUM	INSIDE
12375-12	1/4	1 5/8	2	.032 3S-1/2 H. ALUM.	INSIDE
12375-13	1 9/16	2 15/16	2	.032 3S-1/2 H. ALUM.	INSIDE

LET.	REVISION	DATE	BY
G	-12 & -13 ADDED; LOCKSEAM LOCATION ADDED FOR -3 & -9	4-13-51	HRK
F	-10 & -11 ADDED	3-22-51	I.M.M.
E	2 DIA. WAS 2 1/8 ON -5, LOCKSEAM COLUMN ADDED	2-9-51	I.M.
D	2 1/8 DIA. WAS 2 1/16 ON -4 & -5	5-16-50	C.K.
C	.032 ADDED FOR -9	2-13-50	C.K.
B	-9 ADDED.	2-2-50	J.O.
A	ON -3, 2 7/16 WAS 2 1/8, -8 ADDED	11-22-49	K.D.

THIS DRAWING IS THE PROPERTY OF THE PIPER AIRCRAFT CORP. AND ITS POSSESSION BY UNAUTHORIZED PERSONS SHALL NOT BE CONSTRUED AS PERMISSION TO REPRODUCE FOR SALE, IN WHOLE OR IN PART, ANY DEVICES SHOWN THEREON

MODEL	PER PLANE	NEXT ASSEMBLY	SUPERSEDES	SUP. BY

PIPER AIRCRAFT CORP.
LOCK HAVEN, PENNA.

PART No.	No. REQ.	NOTED SIZE	NOTED DESCRIPTION
			MATERIAL

SCALE — TOTAL WT.—LBS.

FINISH—PIPER SPECIFICATION #10

MANUFACTURING PRACTICES—PIPER SPECIFICATION #9

TUBE-AIR TAKE-OFF

DRAFTSMAN	CHECKER	STANDARDS
R.T.M. 5-20-49	H.R.K. 5-24-49	

12375

514

A 514

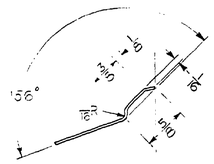

SECTION **A–A**
FULL SIZE

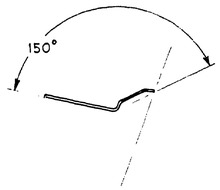

SECTION **B–B**
FULL SIZE

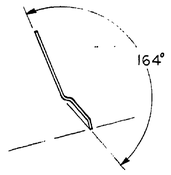

SECTION **C–C**
FULL SIZE

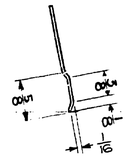

VIEW **D–D**
FULL SIZE

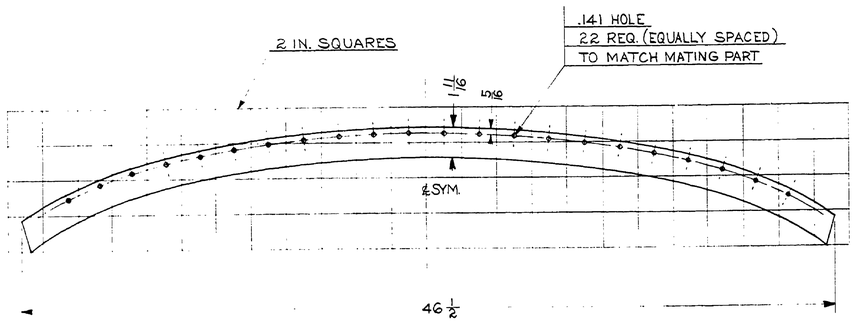

DETAIL (FLAT PATTERN)

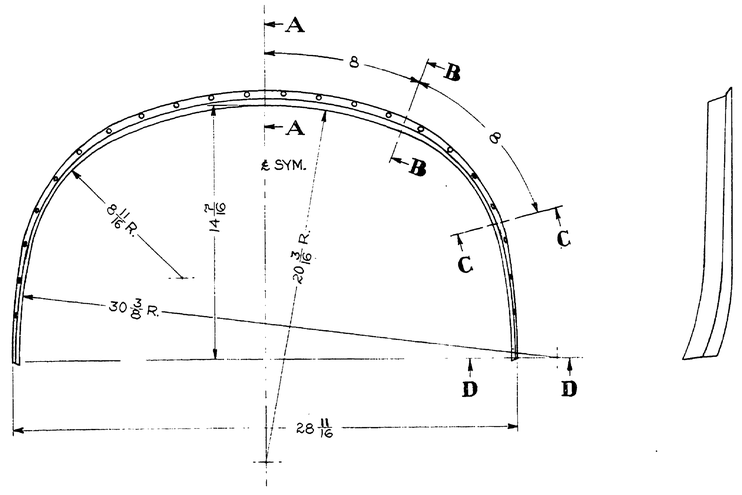

| | | |

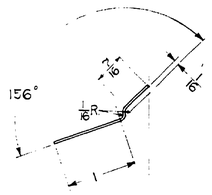

SECTION **A–A**
FULL SIZE

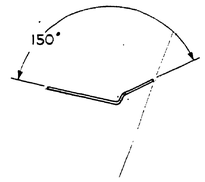

SECTION **B–B**
FULL SIZE

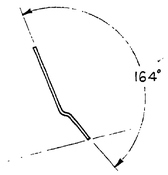

SECTION **C–C**
FULL SIZE

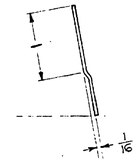

VIEW **D–D**
FULL SIZE

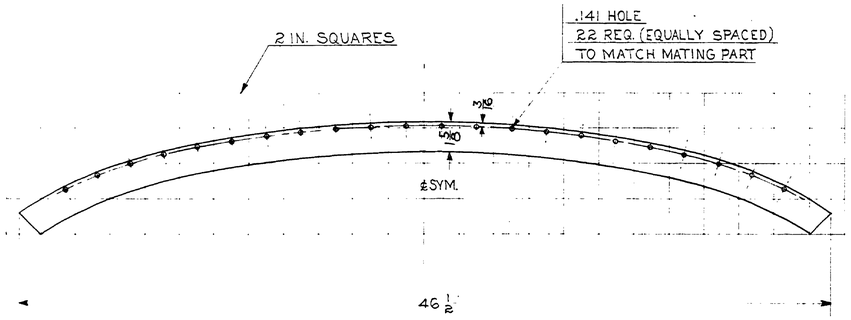

DETAIL (FLAT PATTERN)

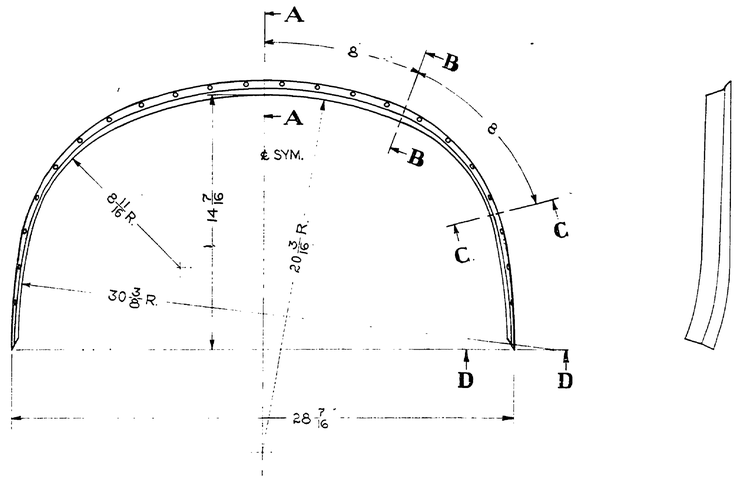

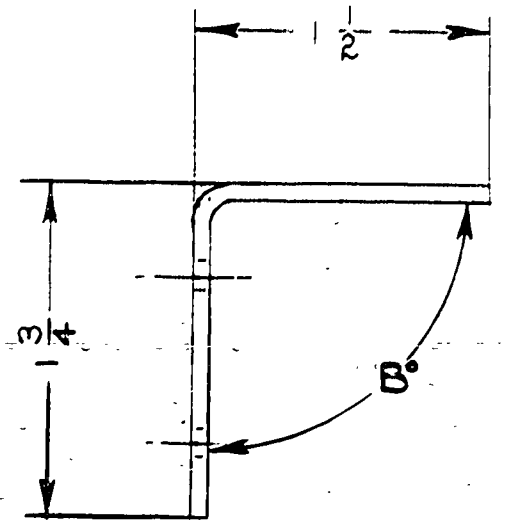

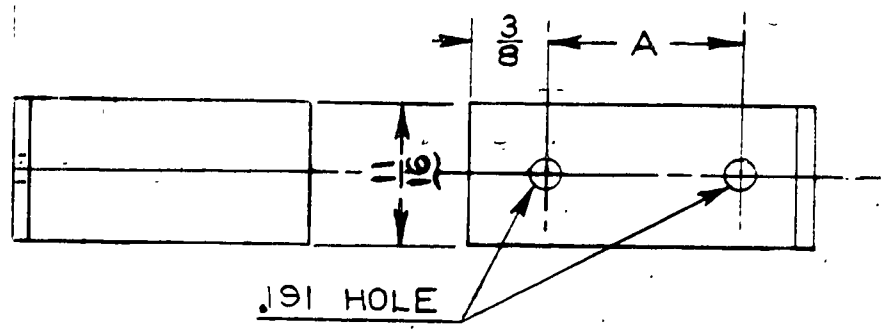

A

PART NO.	A	B°
12379	3/4	78°
12379-2	1	90°

PART NO.	No. REQ.	SIZE	DESCRIPTION
		.095 x 1 1/16 x 3 1/4	#1025 STEEL

MATERIAL

SCALE FULL SIZE | TOTAL WT.–LBS.

FINISH–PIPER SPECIFICATION #10

MANUFACTURING PRACTICES–PIPER SPECIFICATION #9

MODEL	PER PLANE	NEXT ASSEMBLY	SUPERSEDES	SUP. BY

THIS DRAWING IS THE PROPERTY OF THE PIPER AIRCRAFT CORP. AND ITS POSSESSION BY UNAUTHORIZED PERSONS SHALL NOT BE CONSTRUED AS PERMISSION TO REPRODUCE FOR SALE, IN WHOLE OR IN PART, ANY DEVICES SHOWN THEREON.

LET.	REVISION	DATE	BY
A	"A" DIM. FOR 12379 WAS 7/8	2-1-50	K.D.

PIPER AIRCRAFT CORP.
LOCK HAVEN, PENNA.

DRAFTSMAN	CHECKER	STANDARDS
R.T.M. 6-7-49	H.R.K 6-15-49	

ANGLE - COWL CHANNEL ATTACHMENT

12379

111

A III

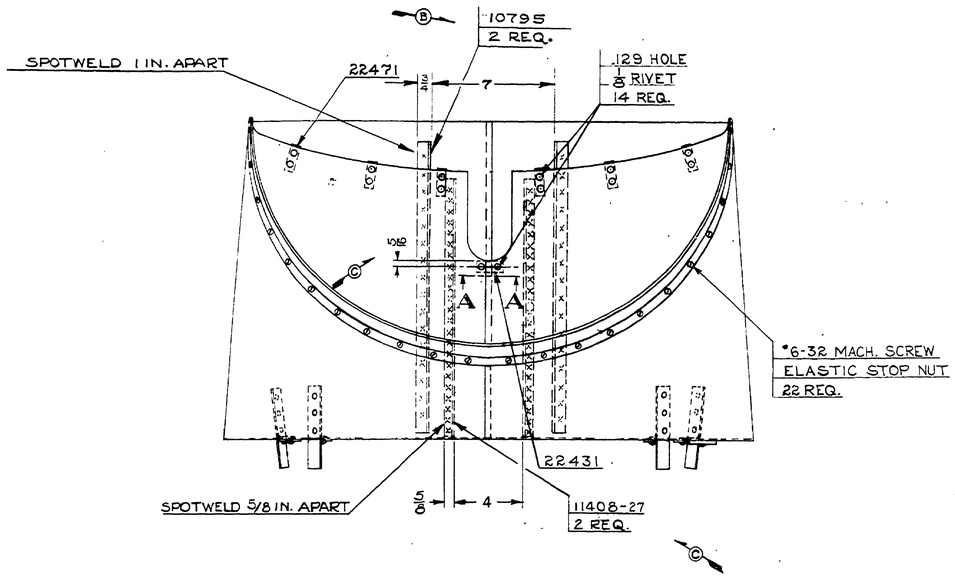

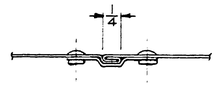

SECTION A-A
TYPICAL LOCK SEAM
FULL SIZE

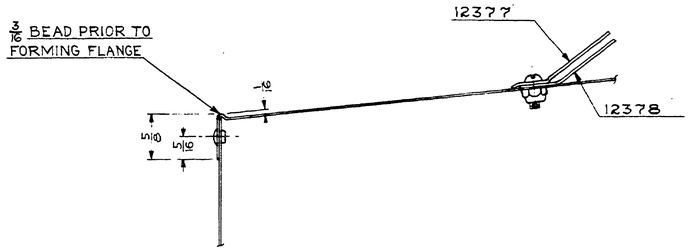

SECTION B-B
FULL SIZE

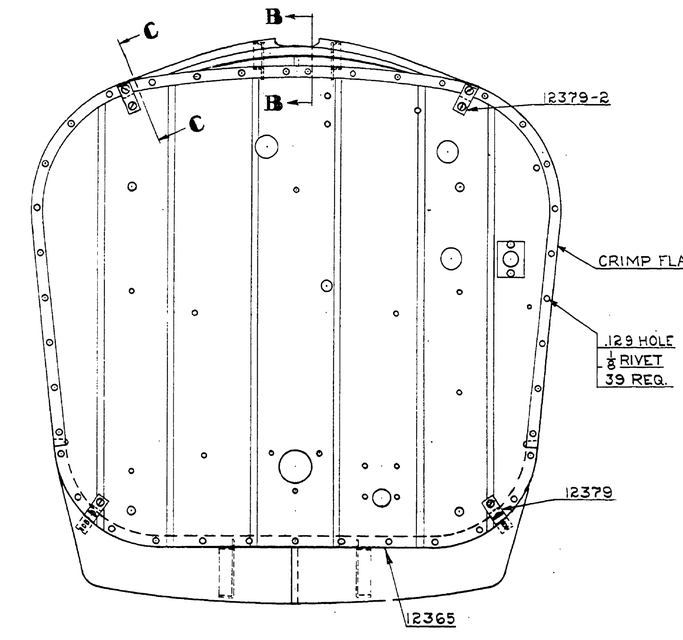

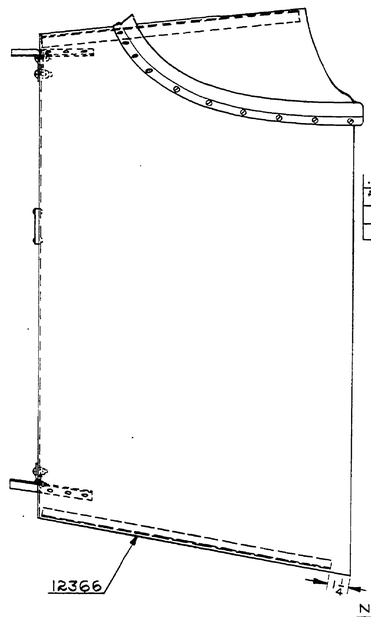

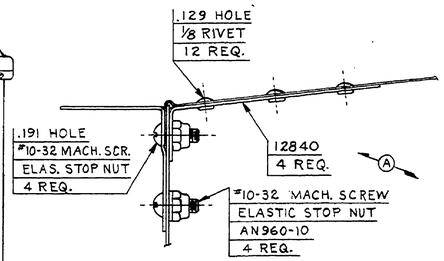

SECTION C-C
FULL SIZE

NOTE :
1. SPRAY INSIDE COWL ASSEMBLY WITH SOUND DEADENER #A-31 PURCH. NOX-RUST CHEMICAL CORP.

11408-27	2	ANGLE	
10795	2	ANGLE	
	65	1/8 x 1/4 L.	2S ALUM. BR. HD. RIVET
	8	ELASTIC STOP NUT #22M02	
	22	ELASTIC STOP NUT #22M62	
#10-32	8	1/2 L	RD. HD. MACH. SCREW
#6-32	22	3/8 L	
AN960-10	4	WASHER	
22431	1	STRAP	
12379-2	2	ATTACHMENT ANGLE	
12379	2	ATTACHMENT ANGLE	
12378	1	REAR ATTACH. STRIP	
12377	1	FRONT ATTACH. STRIP	
12366	2	FUSELAGE COWL	
12365	1	FIREWALL ASSY.	
22471	6	CLIP	
12840	4	REINF. ANGLE	

PART NO.	NO. REQ.	SIZE	DESCRIPTION / MATERIAL

SCALE 3 IN. = 1 FT. & NOTED — TOTAL WT.—LBS.

FINISH—PIPER SPECIFICATION #10

MANUFACTURING PRACTICES—PIPER SPECIFICATION #9

COWL ASSEMBLY-FUSELAGE

LET	REVISION	DATE	BY
C	5/16 WAS 1/4 ADDED 11408-27 & LOCATING DIM.	4-12-51	L.E.M.
B	NOTE 1 & 10795 ADDED	10-14-50	F.C.J.
A	12840 & ATTACH. ADDED	8-28-50	C.K.

MODEL PER PLANE | NEXT ASSEMBLY | SUPERSEDES | SUP. BY

THIS DRAWING IS THE PROPERTY OF THE PIPER AIRCRAFT CORP. AND ITS POSSESSION BY UNAUTHORIZED PERSONS SHALL NOT BE CONSTRUED AS PERMISSION TO REPRODUCE FOR SALE, IN WHOLE OR IN PART, ANY DEVICES SHOWN THEREON.

PIPER AIRCRAFT CORP.
LOCK HAVEN, PENNA.

DRAFTSMAN	CHECKER	STANDARDS
H. R. K. 5-20-43	C. E. K. 6-17-43	

12381

Philadelphia Blue Print Co. 150 6-1-48

A857

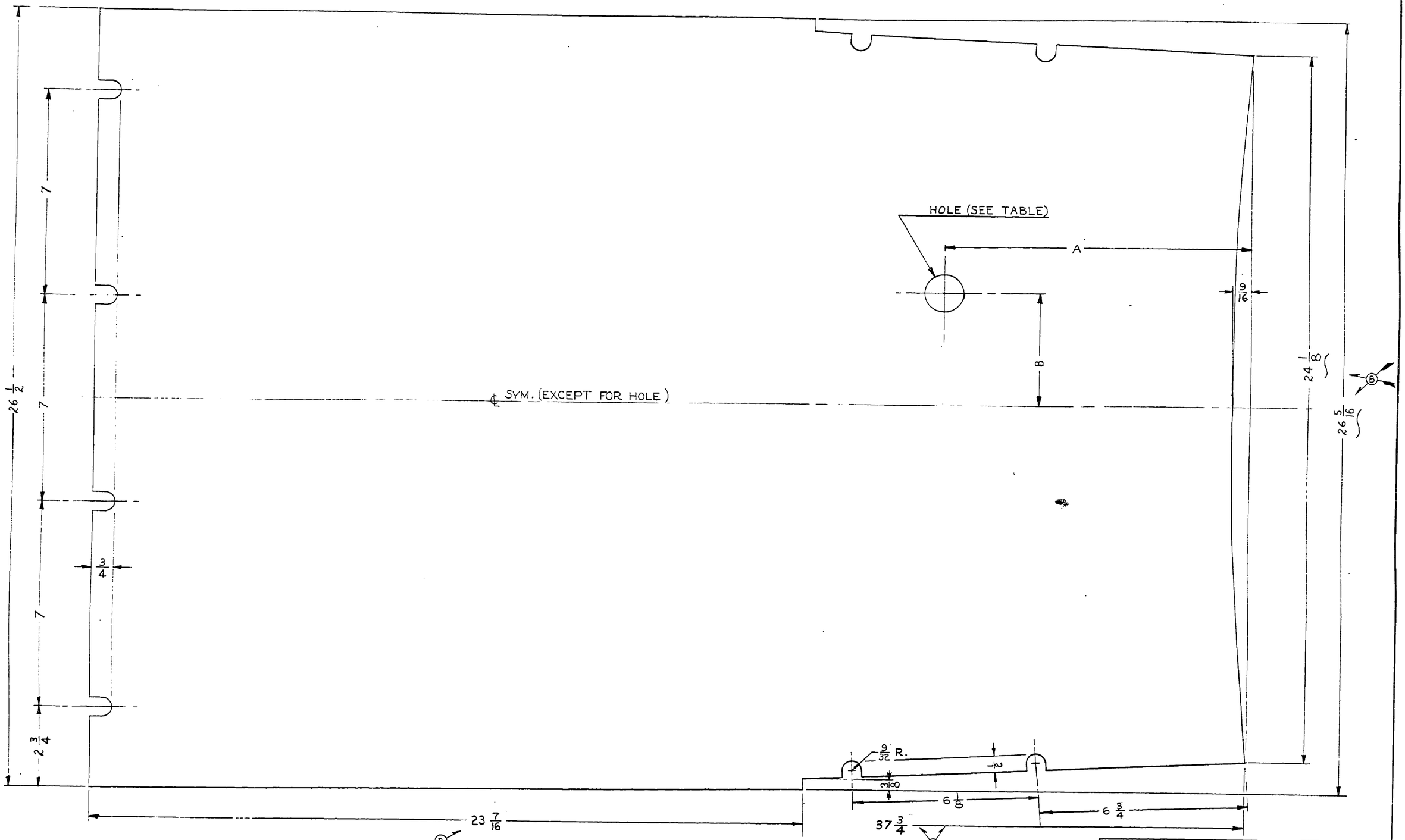

PART NO.	HOLE	A	B
12399	—	—	—
12399-2	1 1/4 DIA.	10	3 13/16
12399-3	1 3/8 DIA.	4 7/8	3
12399-4	7/8	12	5 7/16

LET.	REVISION	DATE	BY
C	-4 ADDED	4-3-51	I.M.M.
B	3/8 & 6 1/8 ADD; 1 3/8 HOLE WAS 1 1/4 FOR -3; 26 5/16 WAS 26 1/2; 24 1/8 WAS 24; 23 7/16 WAS 24 11/16; 1/2 WAS 5/8	9-15-50	FCS
A	-3 & TABLE ADDED	8-28-50	C.K.

THIS DRAWING IS THE PROPERTY OF THE PIPER AIRCRAFT CORP. AND ITS POSSESSION BY UNAUTHORIZED PERSONS SHALL NOT BE CONSTRUED AS PERMISSION TO REPRODUCE FOR SALE, IN WHOLE OR IN PART, ANY DEVICES SHOWN THEREON

MODEL	PER PLANE	NEXT ASSEMBLY	SUPERSEDES	SUP. BY

PIPER AIRCRAFT CORP.
LOCK HAVEN, PENNA.

PART No.	No. REQ.	MATERIAL

SCALE 6 IN. = 1 FT. TOTAL WT.—LBS.

FINISH—PIPER SPECIFICATION #10

MANUFACTURING PRACTICES—PIPER SPECIFICATION #9

WINDOW-TOPDECK REAR (FLAT PATTERN)

DRAFTSMAN	CHECKER	STANDARDS
C.E.K. 5-31-49	H.R.K. 5-31-49	

12399

747

A747

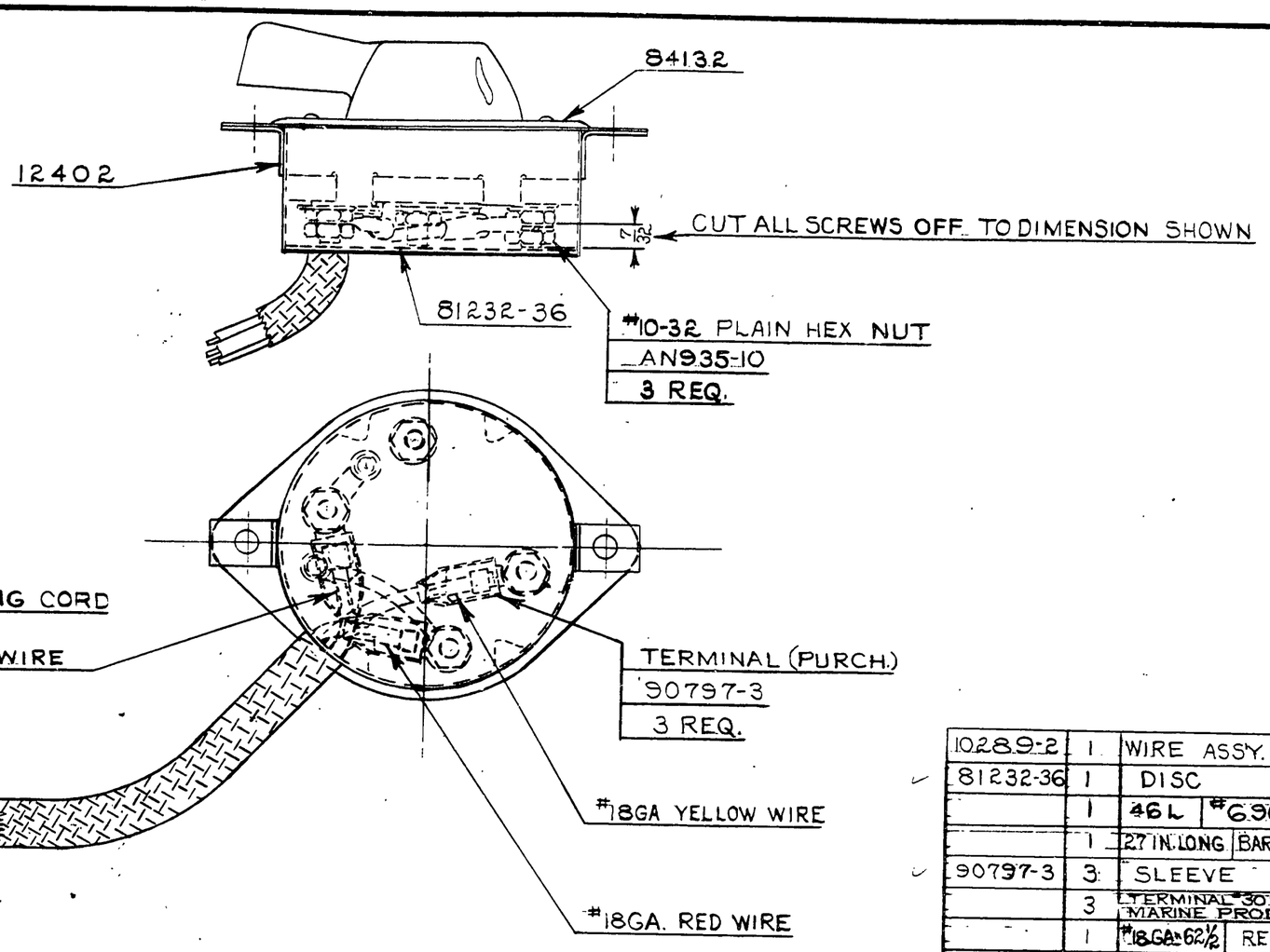

NOTE: PART NO 10289-2 MAY BE USED TO MAKE UP WIRE HARNESS (BEFORE SHIELDING)

PART No.	No. REQ.	SIZE	DESCRIPTION / MATERIAL
10289-2	1		WIRE ASSY. (SEE NOTE)
81232-36	1		DISC
	1	46L	#690-D PACKARD SHIELDING
	1	27 IN. LONG	BARBOURS #7 STITCHING CORD
90797-3	3		SLEEVE
	3		TERMINAL #30997 PURCH. AIRCRAFT MARINE PRODUCTS INC. OR EQUIV.
	1	#18GA-62½	RED CONDUCTOR (AUTOMOTIVE CONSTRUCTION)
	1	#18GA-60	YELLOW CONDUCTOR (AUTOMOTIVE CONSTRUCTION)
	1	#18GA-55½	BLACK CONDUCTOR (AUTOMOTIVE CONSTRUCTION)
			SEE NOTE
#10-32	3		PLAIN HEX NUT
AN935-10	3		LOCK WASHER
84132	1		IGNITION SWITCH ASSEMBLY
12402	1		COVER ASSY

SCALE FULL SIZE — TOTAL WT.—LBS.

FINISH—PIPER SPECIFICATION #10

MANUFACTURING PRACTICES—PIPER SPECIFICATION #9

SWITCH ASSEMBLY — IGNITION (SHIELDED)

LET.	REVISION	DATE	BY

MODEL	PER PLANE	NEXT ASSEMBLY	SUPERSEDES	SUP. BY

THIS DRAWING IS THE PROPERTY OF THE PIPER AIRCRAFT CORP. AND ITS POSSESSION BY UNAUTHORIZED PERSONS SHALL NOT BE CONSTRUED AS PERMISSION TO REPRODUCE FOR SALE, IN WHOLE OR IN PART, ANY DEVICES SHOWN THEREON.

PIPER AIRCRAFT CORP.
LOCK HAVEN, PENNA.

DRAFTSMAN	CHECKER	STANDARDS
R.T.M. 5-31-49	H.R.K. 6-1-49	

12400

515

A515

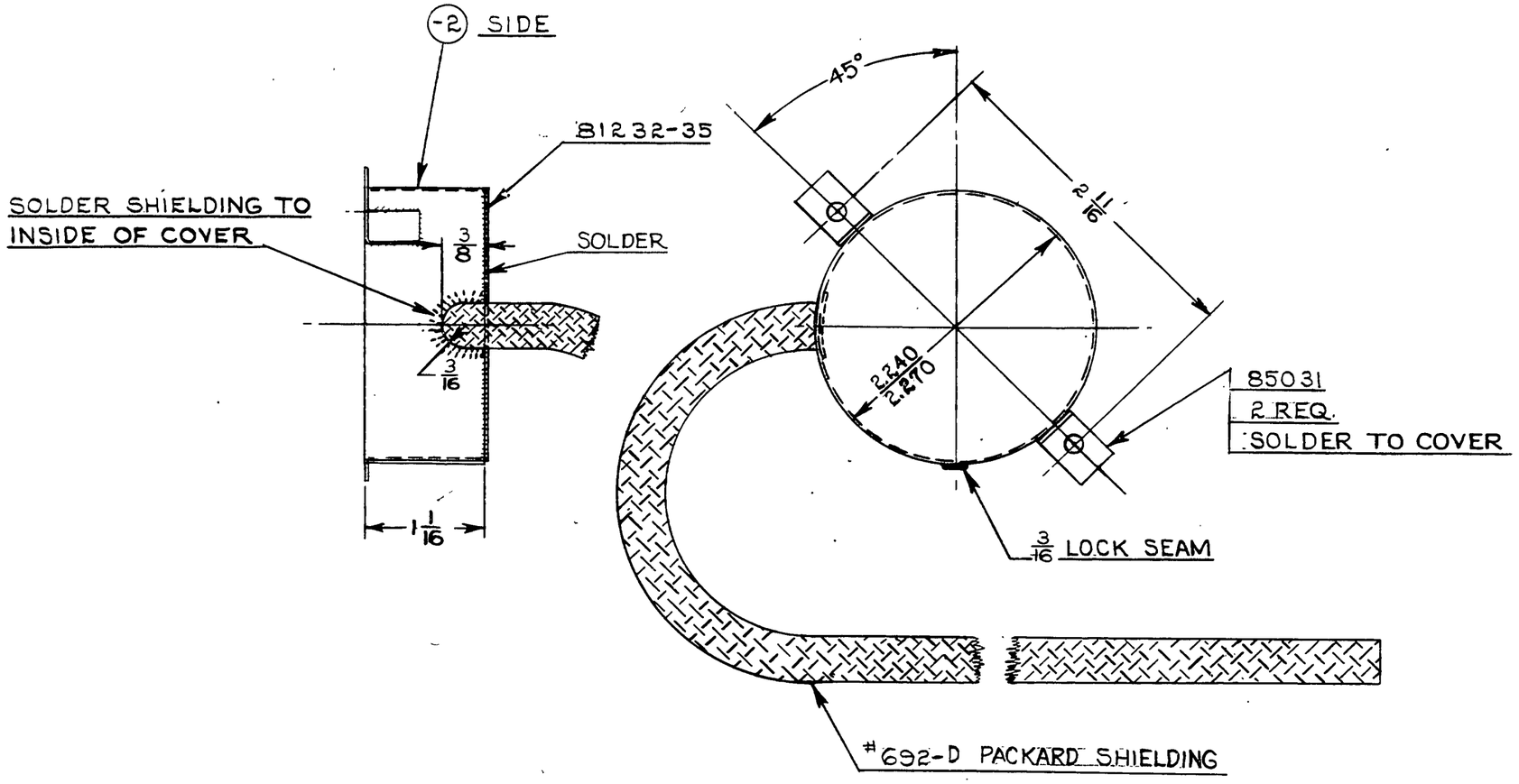

PART No.	No. REQ.	SIZE	MATERIAL / DESCRIPTION
85031	2	ANGLE	
-	1	45 ½ L	#692-D PACKARD SHIELDING
B1232-35	1	DISC	
-2	1	.018 × 1 1/16 × 7 5/8	TERNEPLATE

SCALE FULL SIZE — TOTAL WT.—LBS.

FINISH—PIPER SPECIFICATION #10

MANUFACTURING PRACTICES—PIPER SPECIFICATION #9

COVER ASSEMBLY—
IGNITION SWITCH

LET.	REVISION	DATE	BY

MODEL	PER PLANE	NEXT ASSEMBLY	SUPERSEDES	SUP. BY

THIS DRAWING IS THE PROPERTY OF THE PIPER AIRCRAFT CORP. AND ITS POSSESSION BY UNAUTHORIZED PERSONS SHALL NOT BE CONSTRUED AS PERMISSION TO REPRODUCE FOR SALE, IN WHOLE OR IN PART, ANY DEVICES SHOWN THEREON.

PIPER AIRCRAFT CORP.
LOCK HAVEN, PENNA.

DRAFTSMAN	CHECKER	STANDARDS
R.T.M. 5-31-49	H.R.K. 6-1-49	

12402

516

A 516

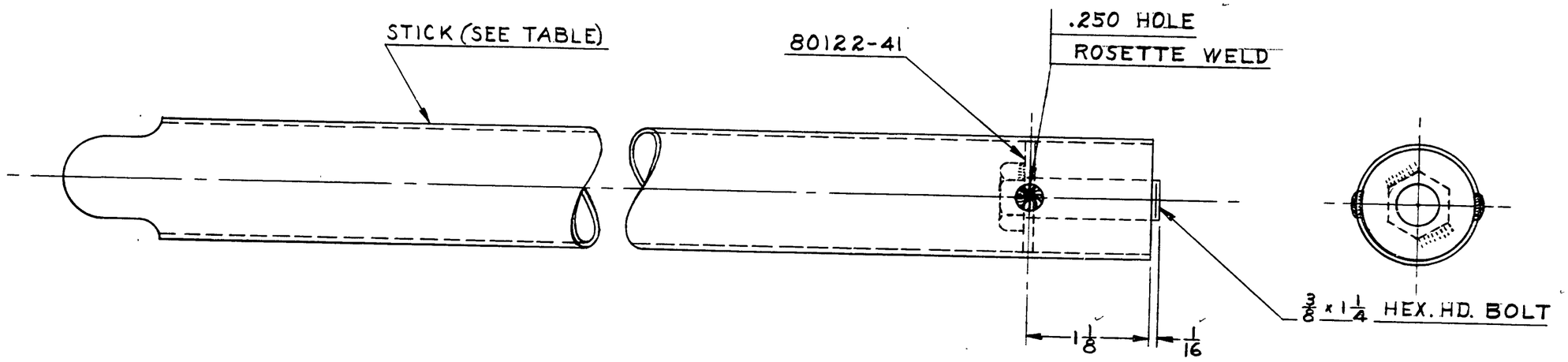

ASSY. NO.	STICK NO.
12403-2	40231
12403-3	40231-2

PART No.	No. REQ.	SIZE	DESCRIPTION / MATERIAL
-	1	3/8 x 1 1/4 L	HEX. HD. STL. CD. PLATED BOLT, 3/8-16 NC-3 THD.
80122-41	1		WASHER
40231-2	1		STICK (SEE TABLE)
40231			

SCALE FULL SIZE — TOTAL WT.—LBS.

FINISH—PIPER SPECIFICATION #10

MANUFACTURING PRACTICES—PIPER SPECIFICATION #9

STICK ASSEMBLY—CONTROL

LET.	REVISION	DATE	BY

MODEL	PER PLANE	NEXT ASSEMBLY	SUPERSEDES	SUP. BY

THIS DRAWING IS THE PROPERTY OF THE PIPER AIRCRAFT CORP. AND ITS POSSESSION BY UNAUTHORIZED PERSONS SHALL NOT BE CONSTRUED AS PERMISSION TO REPRODUCE FOR SALE, IN WHOLE OR IN PART, ANY DEVICES SHOWN THEREON.

PIPER AIRCRAFT CORP.
LOCK HAVEN, PENNA.

DRAFTSMAN	CHECKER	STANDARDS
C. E. K. 5-31-49	H. R. K. 6-1-49	

12403

12403

517

A 517

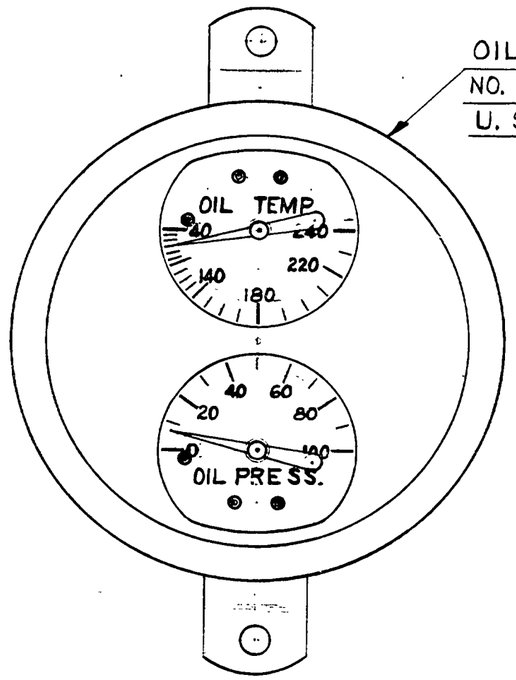

OIL TEMP. & PRESS. GAGE
NO. BK-3½-U-274 PURCH.
U. S. GAUGE CO.

ASSY. NO.	REMARKS
12406	AS SHOWN
12406-2	WITH BLACK FACE AND LUMINOUS DIAL AND POINTER
(B) 12406-3	DULL BLACK BACKGROUND; MARKINGS & POINTERS GREEN (PHOSPHORESCENT AAF SPEC. 14102) SEE NOTE 1.
(C) 12406-4	DULL BLACK BACKGROUND; MARKERS & POINTERS GREEN (PHOSPHORESCENT AAF SPEC. 14102) SEE NOTE 2.

(B)

NOTE:

1. FACE MARKED AS FOLLOWS ON 12406-3 ONLY:
   - OIL TEMPERATURE:
     - MAXIMUM — 245° (RED) LINE
     - NORMAL — 120° TO 245° (GREEN) ARC
     - CAUTION — 40° TO 120° (YELLOW) ARC
     - MINIMUM — 40° (RED) LINE
   - OIL PRESSURE:
     - MAXIMUM — 100* (RED) LINE
     - CAUTION — 85* TO 100* (YELLOW) ARC
     - NORMAL — 65* TO 85* (GREEN) ARC
     - CAUTION — 25* TO 65* (YELLOW) ARC
     - MINIMUM — 25* (RED) LINE
   - ALL MARKINGS 1/16 STROKE.

(C)

2. FACE MARKED AS FOLLOWS ON 12406-4 ONLY:
   - OIL TEMPERATURE;
     - MAXIMUM - 225° (RED) LINE
     - NORMAL - 90° TO 225° (GREEN) ARC
     - CAUTION - 40° TO 90°- (YELLOW) ARC
   - OIL PRESSURE;
     - MAXIMUM - 40* (RED) LINE
     - NORMAL OPERATING - 30* TO 40* (GREEN) ARC
     - MINIMUM CAUTION - 10* TO 30* (YELLOW) ARC
     - MINIMUM OPERATING - 10* (RED) LINE
   - ALL MARKINGS 1/16 STROKE.

LET.	REVISION	DATE	BY
C	-4 & NOTE 2 ADDED	8-18-50	K.D.
B	NOTE 1 ADDED; NOTE REVISED	12-14-49	C.K.
A	-3 ADDED	9-2-49	R.R.

MODEL | PER PLANE | NEXT ASSEMBLY | SUPERSEDES | SUP. BY

THIS DRAWING IS THE PROPERTY OF THE PIPER AIRCRAFT CORP. AND ITS POSSESSION BY UNAUTHORIZED PERSONS SHALL NOT BE CONSTRUED AS PERMISSION TO REPRODUCE FOR SALE, IN WHOLE OR IN PART, ANY DEVICES SHOWN THEREON.

PIPER AIRCRAFT CORP.
LOCK HAVEN, PENNA.

PART NO. | NO. REQ. | MATERIAL

SCALE FULL SIZE | TOTAL WT.—LBS.

FINISH—PIPER SPECIFICATION #10

MANUFACTURING PRACTICES—PIPER SPECIFICATION #9

GAGE ASSEMBLY — OIL TEMPERATURE & PRESSURE

DRAFTSMAN	CHECKER	STANDARDS
C.E.K. 6-6-49	H.R.K. 6-6-49	

12406

518

A-518

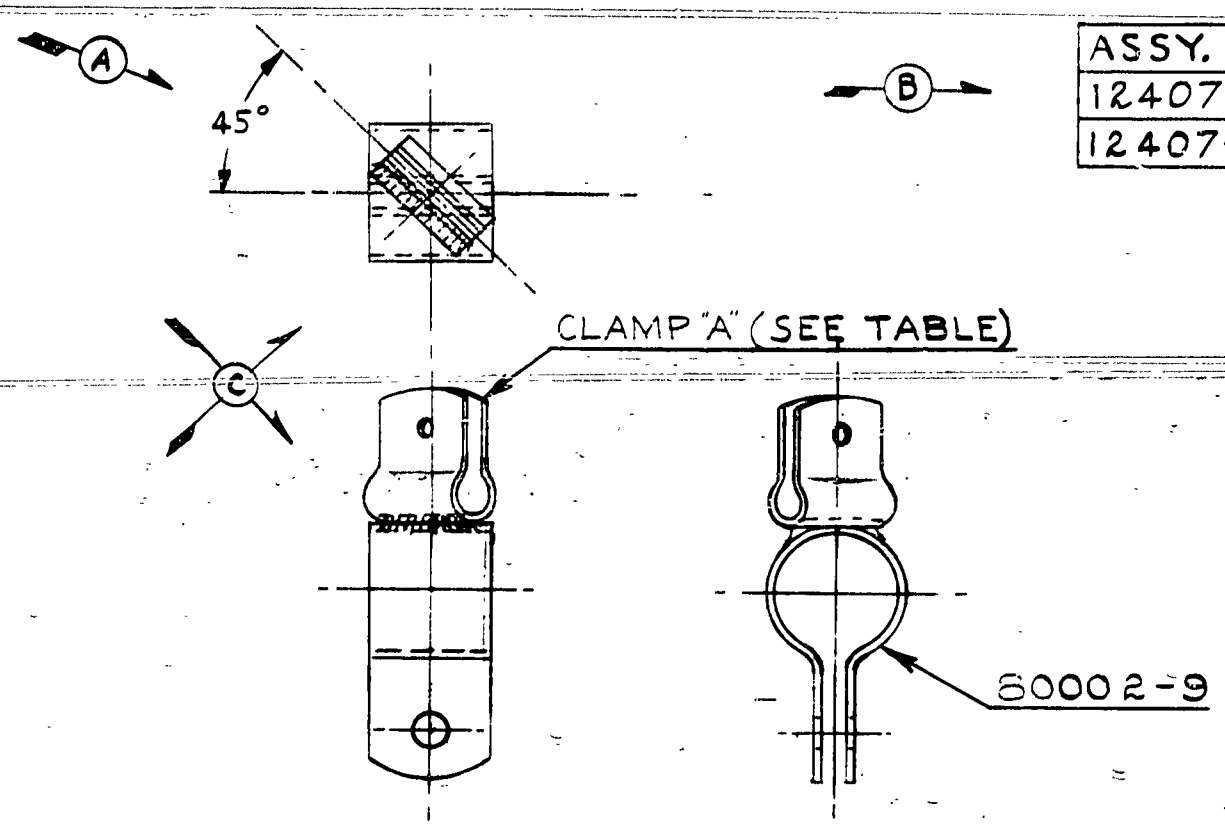

ASSY. NO.	CLAMP "A"
12407	80002-2
12407-2	10466-20

PART NO.	No. REQ.	NAME / MATERIAL
10466-20	1	CLAMP (SEE TABLE)
80002-2	1	CLAMP
80002-9	1	CLAMP

SCALE FULL SIZE — TOTAL WT.—LBS.

FINISH—PIPER SPECIFICATION #10

MANUFACTURING PRACTICES—PIPER SPECIFICATION #9

CLAMP ASSEMBLY

LET.	REVISION	DATE	BY
C	WELD SHOWN ON ONE SIDE ONLY	10-31-50	K.D.
B	-2 & TABLE ADDED	6-29-50	C.K.
A	80002-2 ROTATED 90°	2-24-50	C.K.

MODEL	PER PLANE	NEXT ASSEMBLY	SUPERSEDES	SUP. BY

THIS DRAWING IS THE PROPERTY OF THE PIPER AIRCRAFT CORP. AND ITS POSSESSION BY UNAUTHORIZED PERSONS SHALL NOT BE CONSTRUED AS PERMISSION TO REPRODUCE FOR SALE, IN WHOLE OR IN PART, ANY DEVICES SHOWN THEREON.

PIPER AIRCRAFT CORP.
LOCK HAVEN, PENNA.

DRAFTSMAN	CHECKER	STANDARDS
R.T.M. 6-8-49	H.R.K. 6-15-49	

12407

A 112

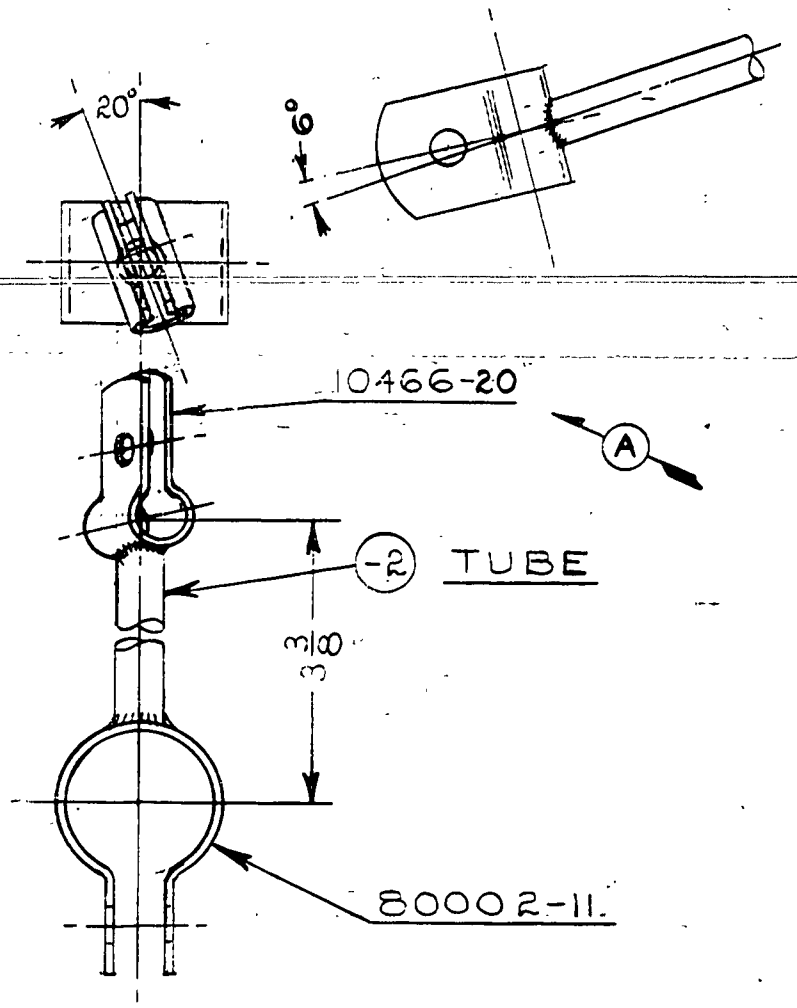

PART No.	No. REQ.	SIZE	MATERIAL DESCRIPTION
80002-11	1	CLAMP	
10466-20	1	CLAMP	
-2	1	1/4 x 028 x 2 13/16	*1025 STEEL TUBE

SCALE FULL SIZE — TOTAL WT.—LBS.

FINISH—PIPER SPECIFICATION #10

MANUFACTURING PRACTICES—PIPER SPECIFICATION #9

CLAMP ASSEMBLY

LET.	REVISION	DATE	BY
A	10466-20 WAS 10466-8	2-1-50	C.K.

MODEL	PER PLANE	NEXT ASSEMBLY	SUPERSEDES	SUP. BY

THIS DRAWING IS THE PROPERTY OF THE PIPER AIRCRAFT CORP. AND ITS POSSESSION BY UNAUTHORIZED PERSONS SHALL NOT BE CONSTRUED AS PERMISSION TO REPRODUCE FOR SALE, IN WHOLE OR IN PART, ANY DEVICES SHOWN THEREON.

PIPER AIRCRAFT CORP.
LOCK HAVEN, PENNA.

DRAFTSMAN	CHECKER	STANDARDS
R.T.M. 6-8-49	H.R.K. 6-15-49	

12408

A 113

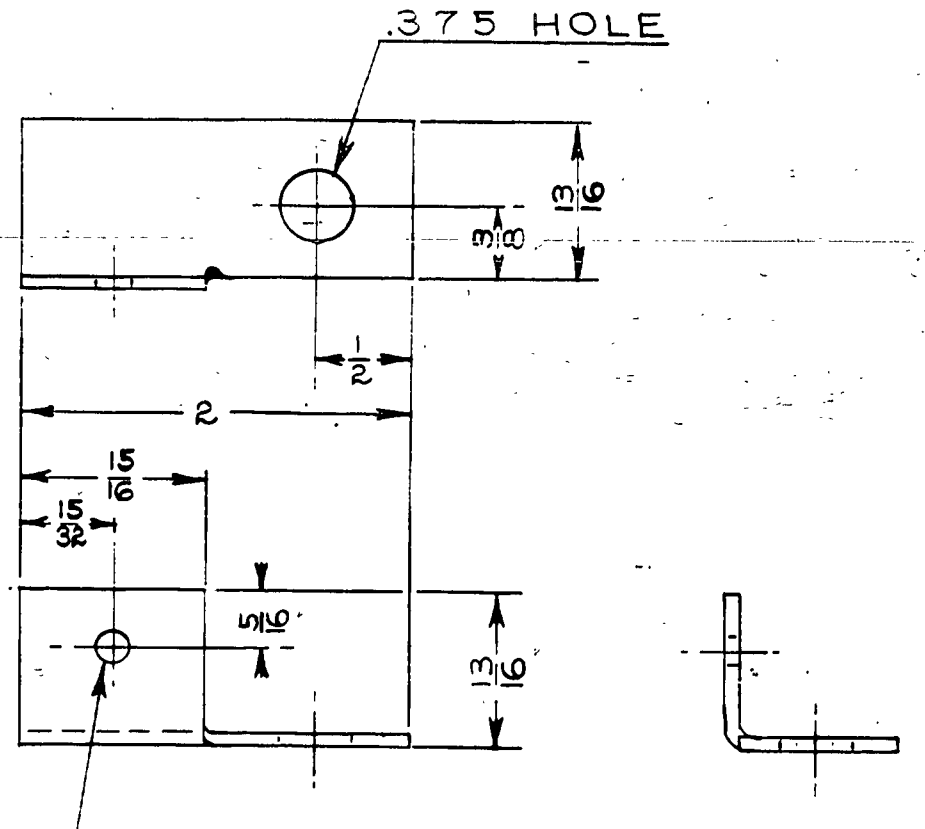

LET.	REVISION	DATE	BY

MODEL	PER PLANE	NEXT ASSEMBLY	SUPERSEDES	SUP. BY

THIS DRAWING IS THE PROPERTY OF THE PIPER AIRCRAFT CORP. AND IT'S POSSESSION BY UNAUTHORIZED PERSONS SHALL NOT BE CONSTRUED AS PERMISSION TO REPRODUCE FOR SALE, IN WHOLE OR IN PART. ANY DEVICES SHOWN THEREON.

PIPER AIRCRAFT CORP.
LOCK HAVEN, PENNA.

PART No.	No. REQ.	SIZE	DESCRIPTION
		.062 × 1 5/8 × 2	#1025 STEEL
		MATERIAL	

SCALE FULL SIZE — TOTAL WT.–LBS.

FINISH–PIPER SPECIFICATION #10

MANUFACTURING PRACTICES–PIPER SPECIFICATION #9

LUG - ENGINE STOP ATTACHMENT

R.T.M.	H.R.K.		12409
6-8-49	6-15-49		
DRAFTSMAN	CHECKER	STANDARDS	

114

A 114

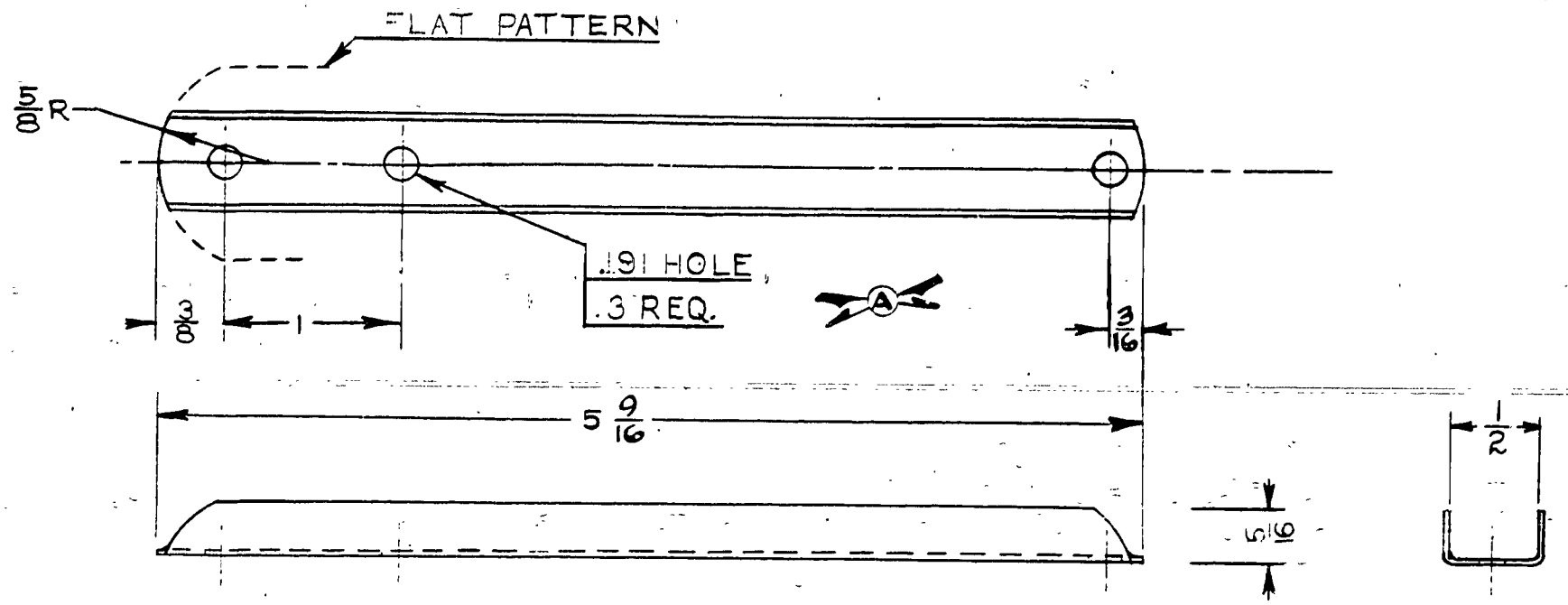
FLAT PATTERN
5/8 R
.191 HOLE,
.3 REQ.
A
5/8
1
3/16
5 9/16
5/16
1/2

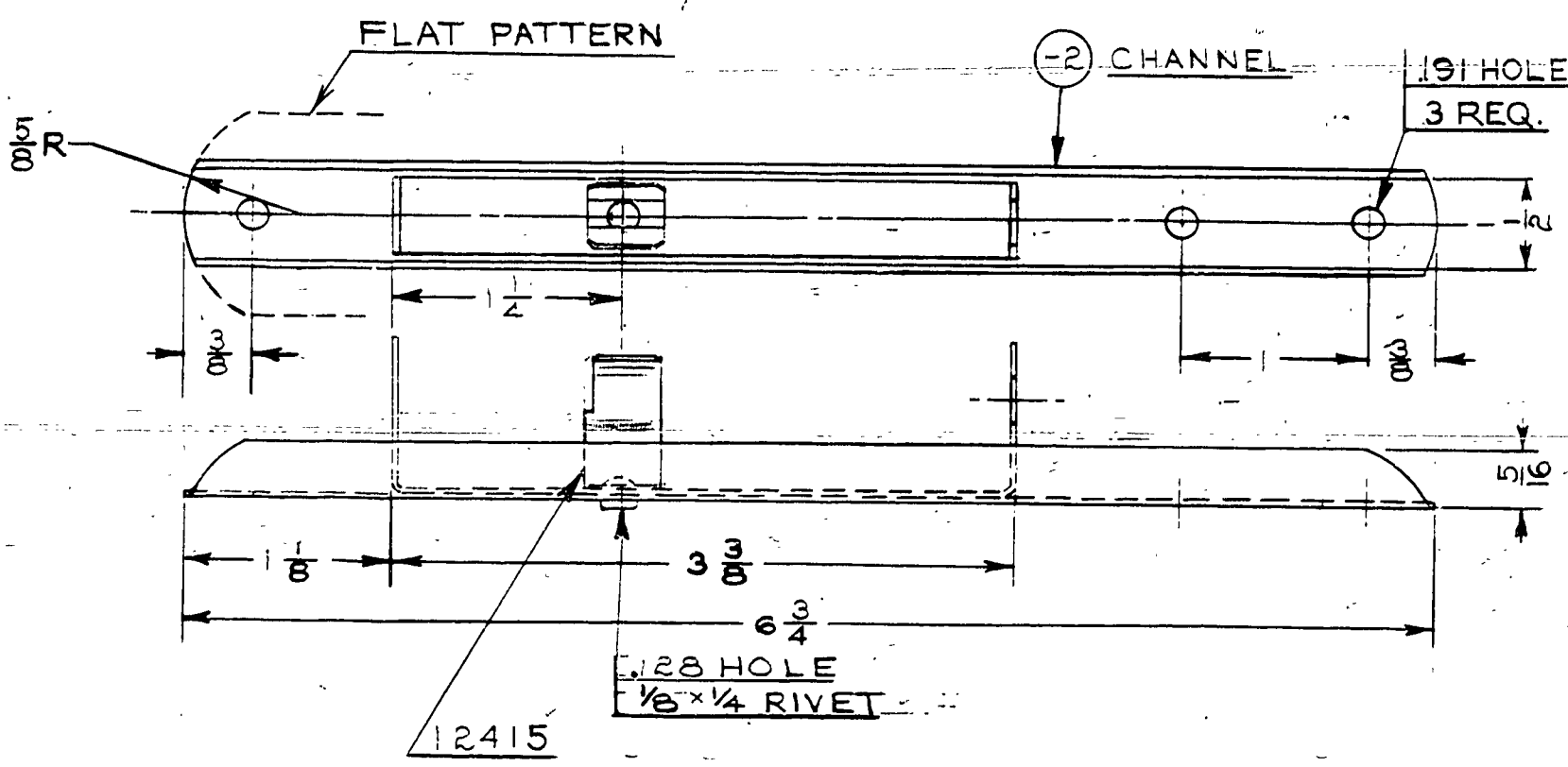

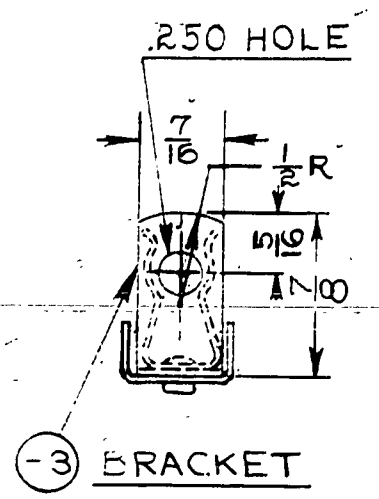

PART No.	No. REQ.	SIZE	DESCRIPTION MATERIAL
	1	1/8 x 1/4 L	RD. HD. STEEL RIVET
12415	1	CLIP	
-3	1	.045 x 7/16 x 5 1/8	#1025 STEEL
-2	1	.045 x 1 1/8 x 6 3/4	#1025 STEEL

SCALE FULL SIZE — TOTAL WT.–LBS.

FINISH–PIPER SPECIFICATION #10

MANUFACTURING PRACTICES–PIPER SPECIFICATION #9

CHANNEL ASSEMBLY– ENGINE STOP

LET.	REVISION	DATE	BY

MODEL	PER PLANE	NEXT ASSEMBLY	SUPERSEDES	SUP. BY

THIS DRAWING IS THE PROPERTY OF THE PIPER AIRCRAFT CORP. AND ITS POSSESSION BY UNAUTHORIZED PERSONS SHALL NOT BE CONSTRUED AS PERMISSION TO REPRODUCE FOR SALE, IN WHOLE OR IN PART, ANY DEVICES SHOWN THEREON.

PIPER AIRCRAFT CORP.
LOCK HAVEN, PENNA.

DRAFTSMAN	CHECKER	STANDARDS
R. T. M. 6-7-49	H. R. K. 6-15-49	

12411

A 116

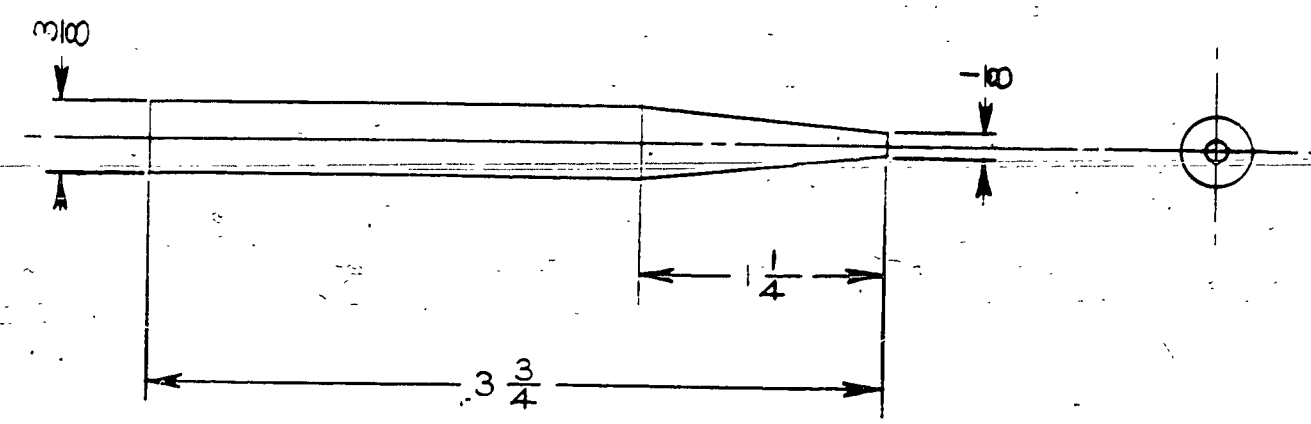
.100
-.100
1 1/4
3 3/4

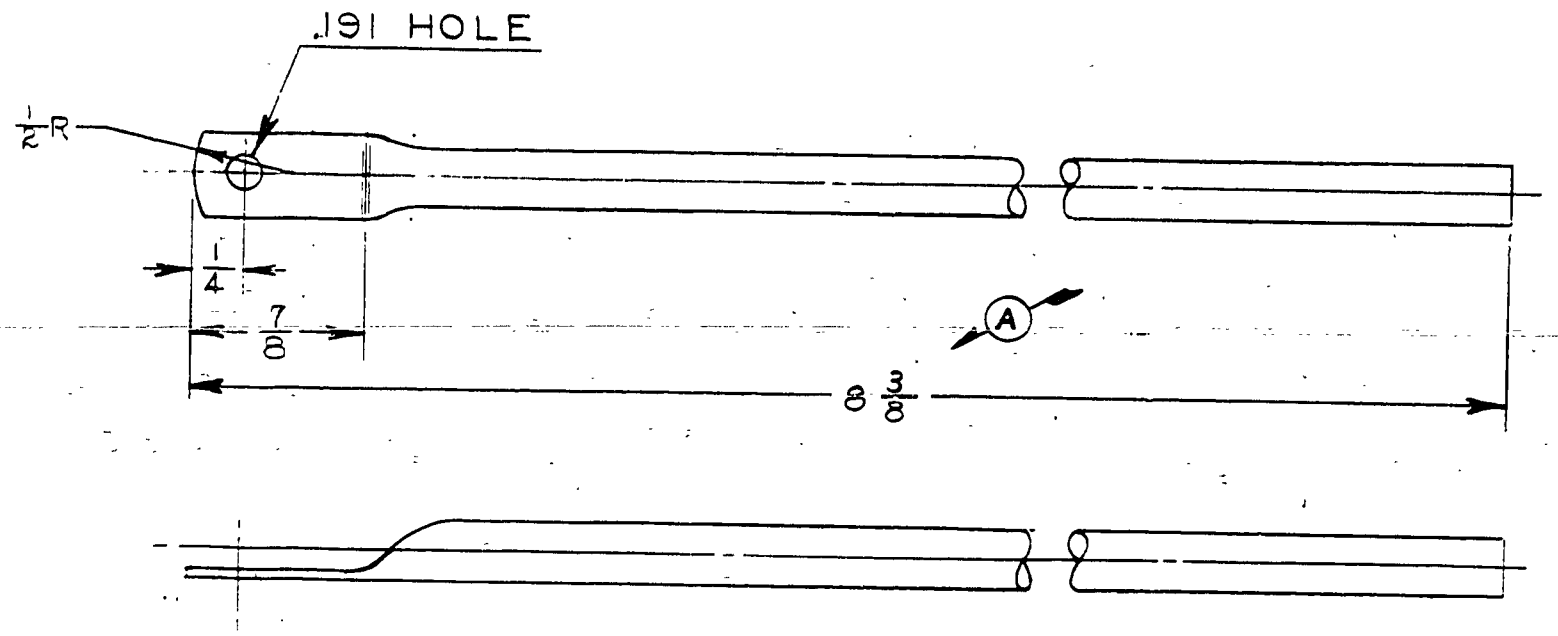

									5/16 x .028 x 8 3/8 L	=10.25 STEEL TUBE
									SIZE	DESCRIPTION
								PART No.	No. REQ.	MATERIAL
								SCALE FULL SIZE		TOTAL WT.–LBS.
								FINISH–PIPER SPECIFICATION #10		
								MANUFACTURING PRACTICES–PIPER SPECIFICATION #9		
				MODEL	PER PLANE	NEXT ASSEMBLY	SUPERSEDES	SUP. BY	TUBE - COWL STOP	

THIS DRAWING IS THE PROPERTY OF THE PIPER AIRCRAFT CORP. AND ITS POSSESSION BY UNAUTHORIZED PERSONS SHALL NOT BE CONSTRUED AS PERMISSION TO REPRODUCE FOR SALE, IN WHOLE OR IN PART. ANY DEVICES SHOWN THEREON.

LET.	REVISION	DATE	BY
A	8 3/8 WAS 9 1/2	3-15-50	C.K.

PIPER AIRCRAFT CORP.
LOCK HAVEN, PENNA.

DRAFTSMAN	CHECKER	STANDARDS
R.T.M. 6-8-49	H. R. K. 6-15-49	

12414

118

A118

CUT OFF THIS PART
AND SMOOTH EDGE

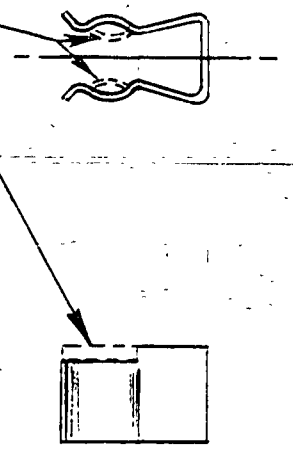

MAKE FROM LITTEL FUSE #125001 (PURCH. LITTEL FUSE INC.)

NOTE: PART #12415 WAS ORIGINALLY STINSON PART NO. 108-6022423-8.
HEREAFTER ONLY PART NO. 12415 SHALL SERVE TO IDENTIFY THIS PART.

LET.	REVISION	DATE	BY
A	NOTE ADDED	9-27-49	R.R.

MODEL	PER PLANE	NEXT ASSEMBLY	SUPERSEDES	SUP. BY

THIS DRAWING IS THE PROPERTY OF THE PIPER AIRCRAFT CORP. AND ITS POSSESSION BY UNAUTHORIZED PERSONS SHALL NOT BE CONSTRUED AS PERMISSION TO REPRODUCE FOR SALE, IN WHOLE OR IN PART, ANY DEVICES SHOWN THEREON.

PIPER AIRCRAFT CORP.
LOCK HAVEN, PENNA.

PART No.	No. REQ.	MATERIAL

SCALE FULL SIZE | TOTAL WT.—LBS.

FINISH—PIPER SPECIFICATION #10

MANUFACTURING PRACTICES—PIPER SPECIFICATION #9

CLIP

DRAFTSMAN	CHECKER	STANDARDS
R.T.M. 6-8-49	H.R.K. 6-15-49	

12415

12415

119

A119

WAS D1105-B

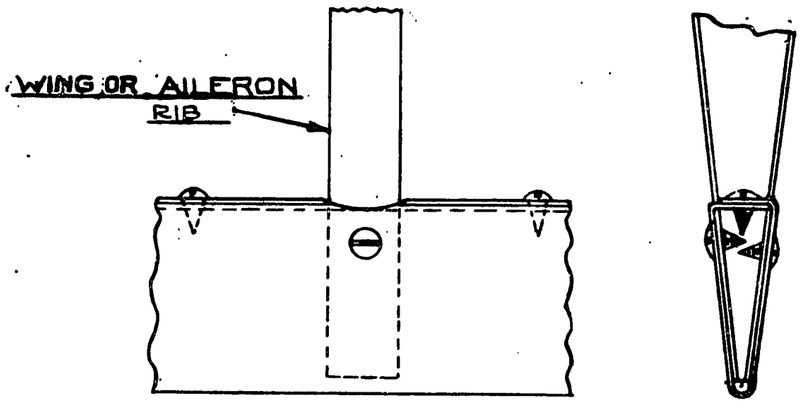

ATTACHMENT AT SINGLE RIB

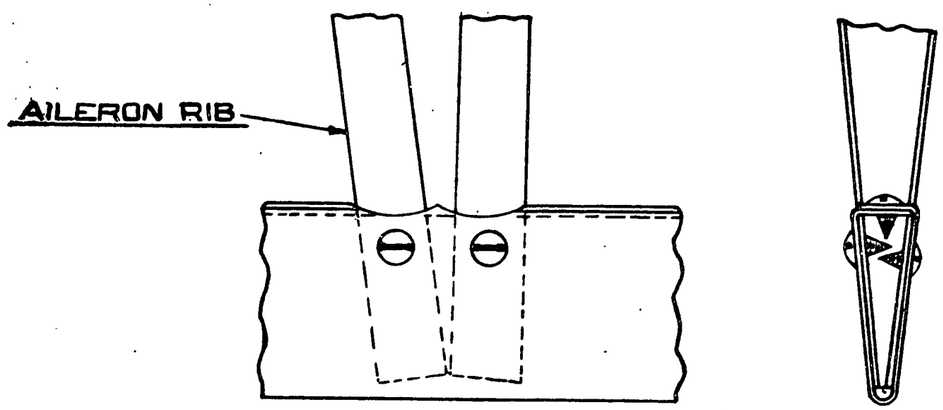

ATTACHMENT AT DOUBLE RIBS

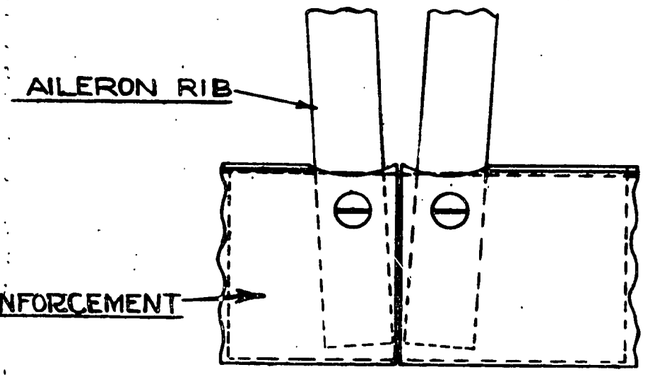

JOINT OF TRAILING EDGE

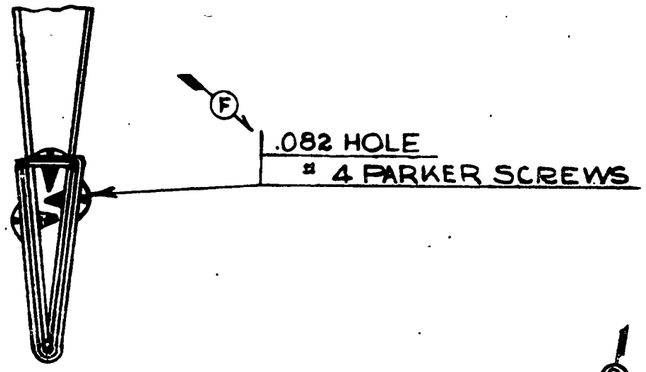

LET.	REVISION	DATE	BY	
H	JSC N.A.16365 REM.	9-29-45		E.L.N.
G	JSC NEXT ASSY. 16355 WAS 19555	11-24-43		R.E.T.
F	.082 HOLE ADDED	7-31-43		C.E.K.
E	PK.SCR. REM'D FROM 8	3-5-43		R.R.F.
D	40411 REF. REMOVED	5-5-43		R.R.F.
C	BELT ASSY. 42585 WAS 40514	4-28-43		R.E.S.
B	42595 WAS 40444 FOR JSK, JSD	1-21-43		R.R.F.
A	NOTE REMOVED	8-2-42		H.R.K.

MODEL	PER SHIP	NEXT ASSEMBLY	SUPERSEDES	SUPERSEDED BY:
J5C			42585	
J3			42585	
TG-9			13004, 40514	
HE-1			40444, 13556	
J5D			13556, 42656	
J5			42595, 40444	
J4			40444, 13556	

Limits and shop practices, unless otherwise noted, to be in accordance with Piper Specification #98 #10

PIPER AIRCRAFT CORP.
LOCK HAVEN, PENNA.

PART NO.	NO. REQ.	MATERIAL

SCALE FULL SIZE

ATTACHMENT—AILERON & WING TRAILING EDGE

DRAWN	CHECKED	APPROVED
8-12-41 W.E.S.	8-12-41 RRB	

12422

A519

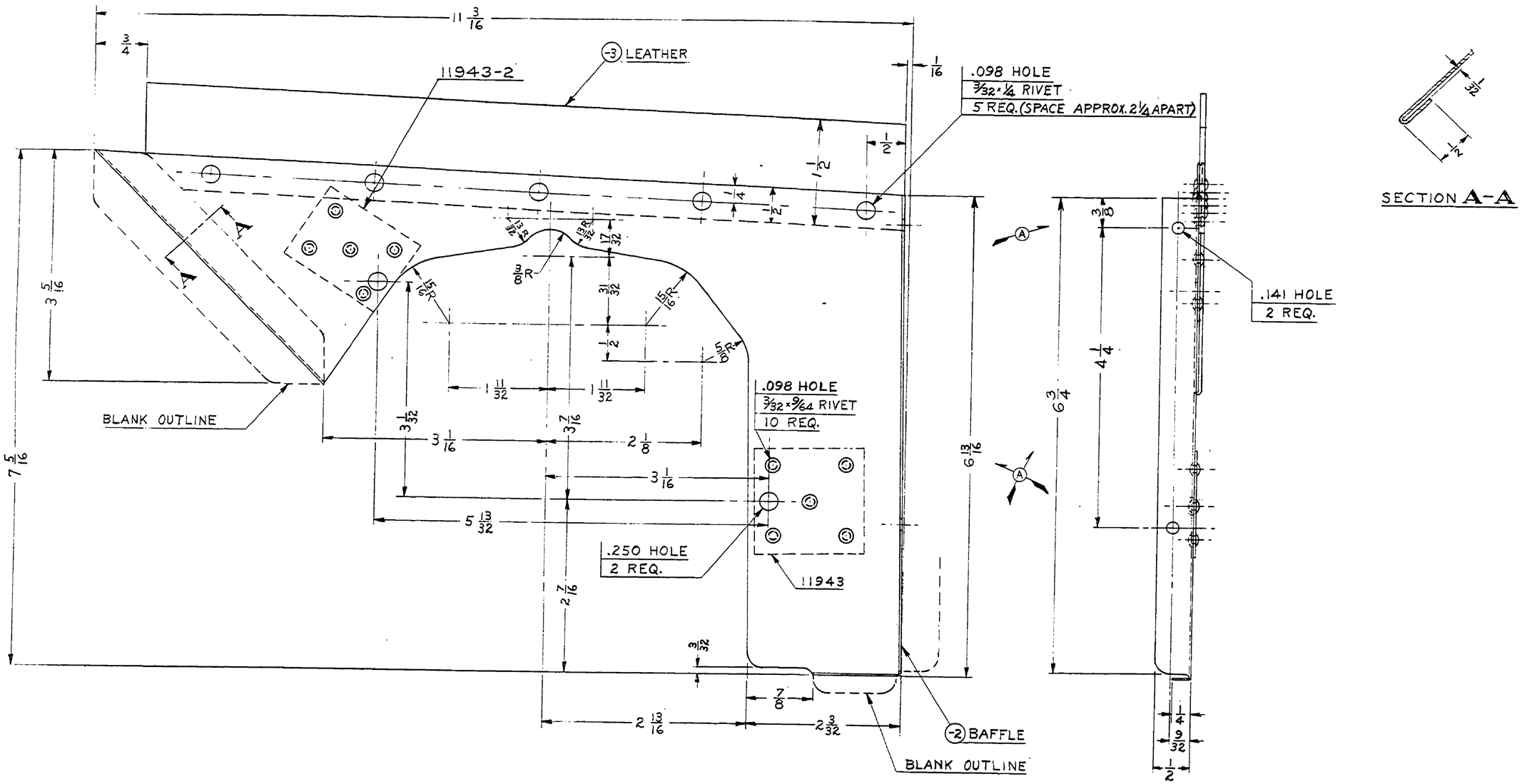

PART No.	NO. REQ.	SIZE	DESCRIPTION / MATERIAL
	10	3/32 x 9/64	STL. TUBULAR CAD. PL. RIVET
	5	3/32 x 1/4	2S ALUM. BR. HD. RIVET
11943-2	1		REINFORCEMENT
11943	1		REINFORCEMENT
-3	1	1/16 x 1 1/2 x 10 3/8	GENUINE LEATHER #1MB
-2	1	.032 x 7 9/16 x 11 1/16	3S-1/2 H. ALUM.

SCALE FULL SIZE — TOTAL WT.—LBS.

FINISH—PIPER SPECIFICATION #10

MANUFACTURING PRACTICES—PIPER SPECIFICATION #9

BAFFLE ASSEMBLY-ENGINE RIGHT SIDE REAR

THIS DRAWING IS THE PROPERTY OF THE PIPER AIRCRAFT CORP. AND ITS POSSESSION BY UNAUTHORIZED PERSONS SHALL NOT BE CONSTRUED AS PERMISSION TO REPRODUCE FOR SALE, IN WHOLE OR IN PART, ANY DEVICES SHOWN THEREON

LET.	REVISION	DATE	BY
A	3/8 WAS 15/16; 6 3/4 WAS 7 1/8; 6 13/16 WAS 7 3/16	11-10-50	HRK

MODEL | PER PLANE | NEXT ASSEMBLY | SUPERSEDES | SUP. BY

PIPER AIRCRAFT CORP.
LOCK HAVEN, PENNA.

DRAFTSMAN	CHECKER	STANDARDS
C. E. K. 6-10-49	H. R. K. 6-16-49	

12424

748

A748

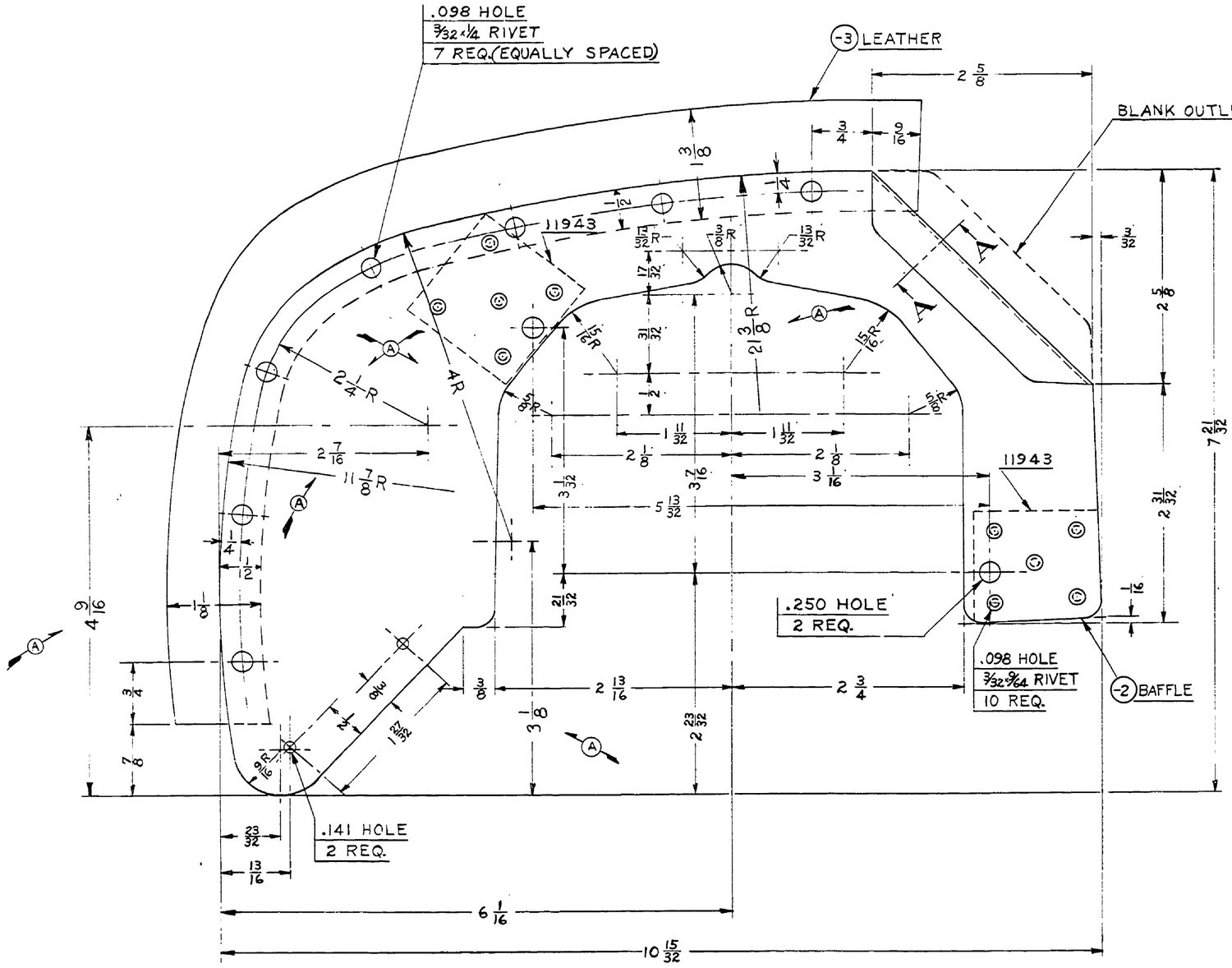



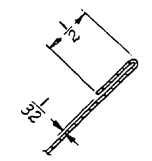

SECTION A-A

	10	3/32 x 9/64	STL. TUBULAR CAD. PL. RIVET
	7	3/32 x 1/4	2S ALUM. BR. HD. RIVET
11943	2	REINFORCEMENT	
-3	1	1/16 x 7 25/32 x 9 1/32	GENUINE LEATHER "IMB
-2	1	.032 x 7 21/32 x 10 15/32	3S-1/2 H. ALUM.
	NO. REQ.	SIZE	DESCRIPTION
PART NO.		MATERIAL	

SCALE FULL SIZE — TOTAL WT.—LBS.

FINISH—PIPER SPECIFICATION #10

MANUFACTURING PRACTICES—PIPER SPECIFICATION #9

THIS DRAWING IS THE PROPERTY OF THE PIPER AIRCRAFT CORP. AND ITS POSSESSION BY UNAUTHORIZED PERSONS SHALL NOT BE CONSTRUED AS PERMISSION TO REPRODUCE FOR SALE, IN WHOLE OR IN PART. ANY DEVICES SHOWN THEREON.

LET.	REVISION	DATE	BY
A	2 1/4 R WAS 3 1/16; 2 7/16 WAS 3 1/2; 7 23/32 REM.; 4 R, 21 3/8 R & 3 1/16 ADDED	11-9-50	HRK

MODEL	PER PLANE	NEXT ASSEMBLY	SUPERSEDES	SUP. BY

PIPER AIRCRAFT CORP.
LOCK HAVEN, PENNA.

BAFFLE ASSEMBLY-ENGINE
RIGHT SIDE FRONT

DRAFTSMAN	CHECKER	STANDARDS
C. E. K. 6-10-49	M. B. K. 6-16-49	

12425

749

A749

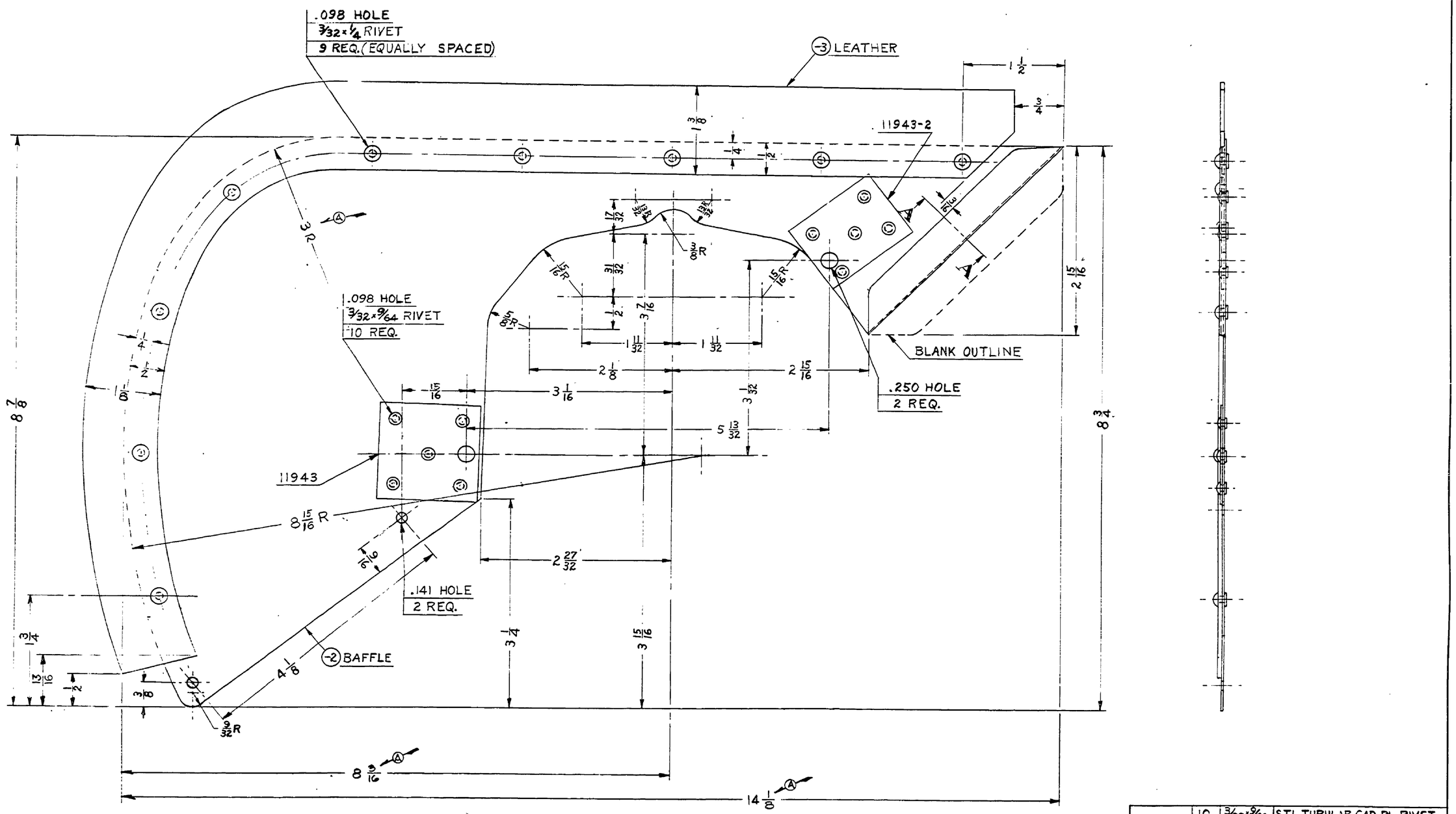

SECTION A-A

PART NO.	NO. REQ.	SIZE	DESCRIPTION MATERIAL
	10	3/32 x 9/64	STL. TUBULAR CAD. PL. RIVET
	9	3/32 x 1/4 L	2S ALUM. BR. HD. RIVET
11943-2	1		REINFORCEMENT
11943	1		REINFORCEMENT
-3	1	1/16 x 9 1/8 x 14 3/32	GENUINE LEATHER *IMB
-2	1	.032 x 8 3/8 x 14 1/8	3S-1/2H. ALUM.

SCALE FULL SIZE — TOTAL WT.—LBS.

FINISH—PIPER SPECIFICATION #10

MANUFACTURING PRACTICES—PIPER SPECIFICATION #9

THIS DRAWING IS THE PROPERTY OF THE PIPER AIRCRAFT CORP. AND ITS POSSESSION BY UNAUTHORIZED PERSONS SHALL NOT BE CONSTRUED AS PERMISSION TO REPRODUCE FOR SALE, IN WHOLE OR IN PART, ANY DEVICES SHOWN THEREON

LET.	REVISION	DATE	BY
A	DIM. REVISED	11-9-50	MG.

MODEL | PER PLANE | NEXT ASSEMBLY | SUPERSEDES | SUP. BY

PIPER AIRCRAFT CORP.
LOCK HAVEN, PENNA.

BAFFLE ASSEMBLY—ENGINE
LEFT SIDE FRONT

DRAFTSMAN	CHECKER	STANDARDS
C. E. K. 6-9-49	H. R. K. 6-17-49	

12426

750

A750

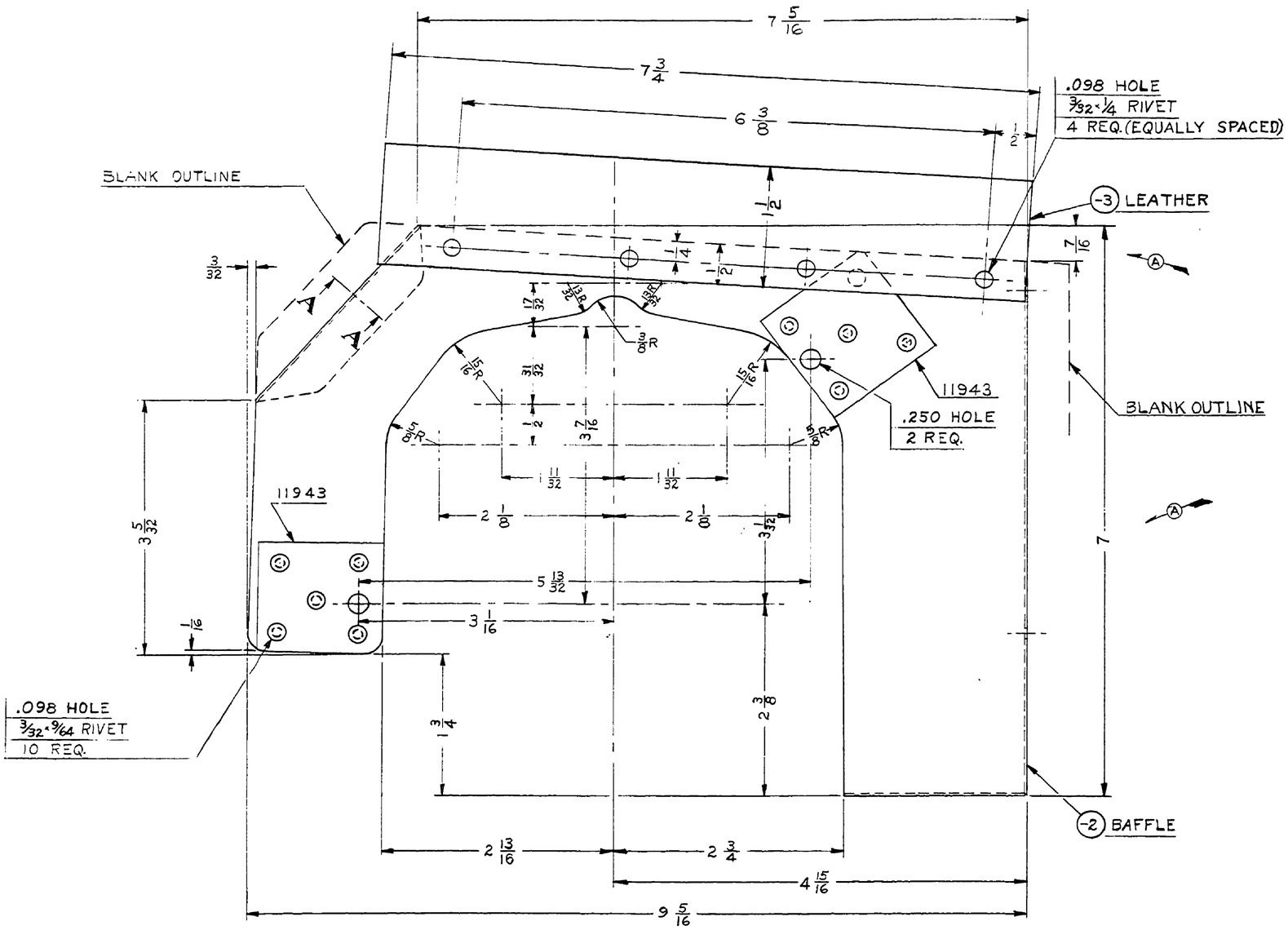

	10	3/32 x 9/64 L.	STL. TUBULAR CAD. PL. RIVET
	4	3/32 x 1/4 L.	2SALUM. BR. HD. RIVET
11943	2	REINFORCEMENT	
-3	1	1/16 x 1 1/2 x 7 3/4	GENUINE LEATHER #1MB
-2	1	.032 x 7 5/16 x 9 15/16	3S-1/2 H. ALUM.
PART NO.	NO. REQ.	SIZE	DESCRIPTION
		MATERIAL	

SCALE FULL SIZE — TOTAL WT.—LBS.

FINISH—PIPER SPECIFICATION #10

MANUFACTURING PRACTICES—PIPER SPECIFICATION #9

THIS DRAWING IS THE PROPERTY OF THE PIPER AIRCRAFT CORP. AND ITS POSSESSION BY UNAUTHORIZED PERSONS SHALL NOT BE CONSTRUED AS PERMISSION TO REPRODUCE FOR SALE, IN WHOLE OR IN PART. ANY DEVICES SHOWN THEREON.

LET.	REVISION	DATE	BY
A	7 WAS 7 1/16; 6 5/16 WAS 7; 7/16 DIM. ADDED	11-10-50	HRK

MODEL | PER PLANE | NEXT ASSEMBLY | SUPERSEDES | SUP. BY

PIPER AIRCRAFT CORP.
LOCK HAVEN, PENNA.

BAFFLE ASSEMBLY—ENGINE
LEFT SIDE REAR

DRAFTSMAN	CHECKER	STANDARDS
C. E. K. 6-6-49	H. R. K. 6-16-49	

12427

751

A751

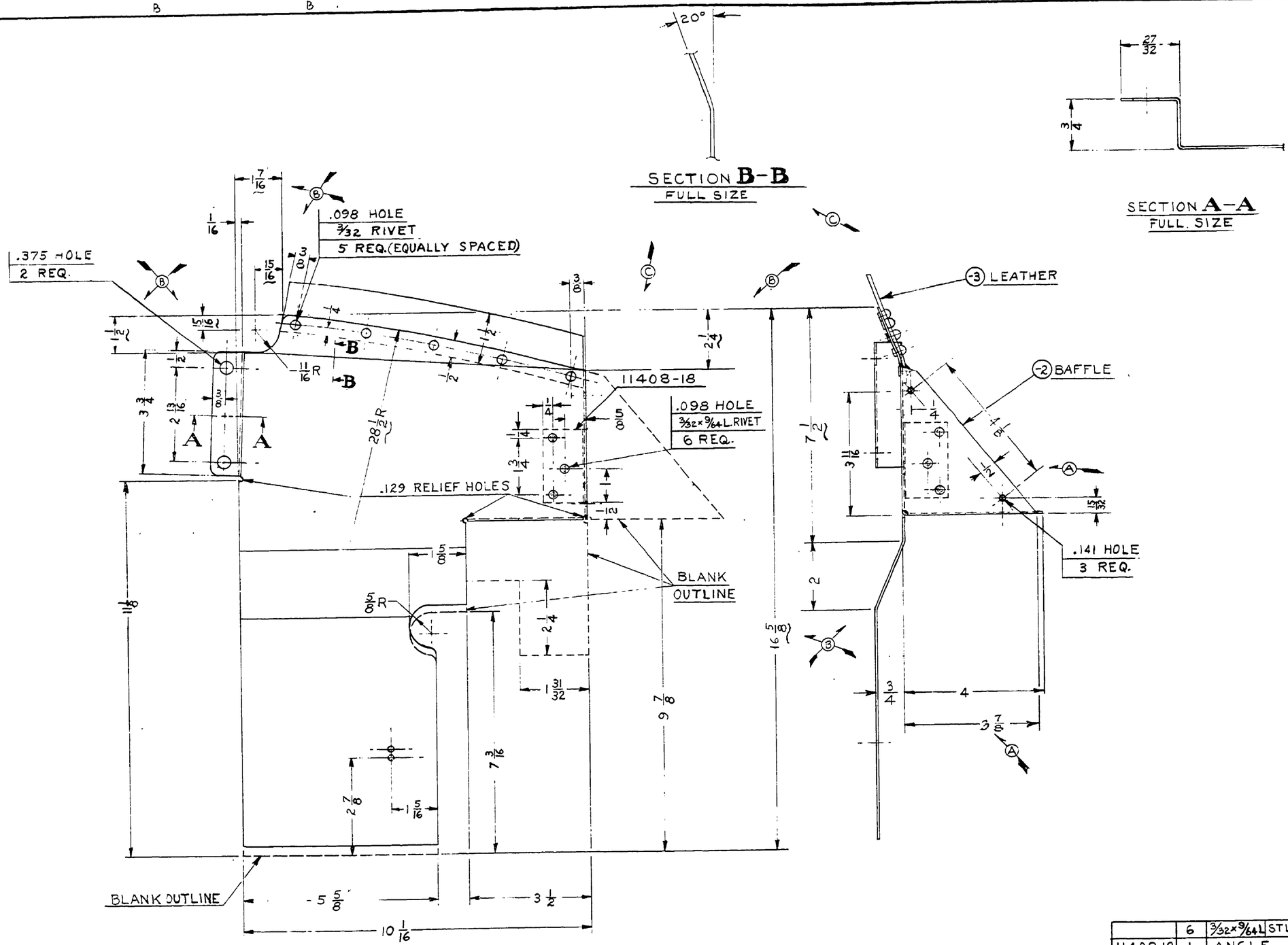

	6	3/32 x 9/64 L	STL. TUB. CAD. PLATED RIVET
11408-18	1	ANGLE	
	5	3/32 x 1/4 L	2S ALUM. BR. HD. RIVET
-3	1	1/16 x 1 3/4 x 9	GENUINE LEATHER *IMB
-2	1	.032 x 15 17/32 x 16 3/8	3S-1/2 H. ALUM.
PART NO.	NO. REQ.	SIZE	DESCRIPTION
		MATERIAL	

SCALE 6 IN. = 1 FT. & NOTED — TOTAL WT.—LBS.

FINISH—PIPER SPECIFICATION #10

MANUFACTURING PRACTICES—PIPER SPECIFICATION #9

THIS DRAWING IS THE PROPERTY OF THE PIPER AIRCRAFT CORP. AND ITS POSSESSION BY UNAUTHORIZED PERSONS SHALL NOT BE CONSTRUED AS PERMISSION TO REPRODUCE FOR SALE, IN WHOLE OR IN PART. ANY DEVICES SHOWN THEREON.

LET.	REVISION	DATE	BY
C	11408-18 & SECTION B-B ADDED	2-7-51	LM.M.
B	DIM. REVISED; JOGGLE ADDED	11-14-50	MRK
A	FLANGE TRIMMED, 1/2 ADDED, 2 RIVETS ADDED	7-11-50	MG

MODEL	PER PLANE	NEXT ASSEMBLY	SUPERSEDES	SUP. BY

PIPER AIRCRAFT CORP.
LOCK HAVEN, PENNA.

BAFFLE ASSEMBLY-ENGINE
LEFT FRONT.

C. E. K.	M. R. K.	
6-8-49	6-16-49	
DRAFTSMAN	CHECKER	STANDARDS

12428

752

A752

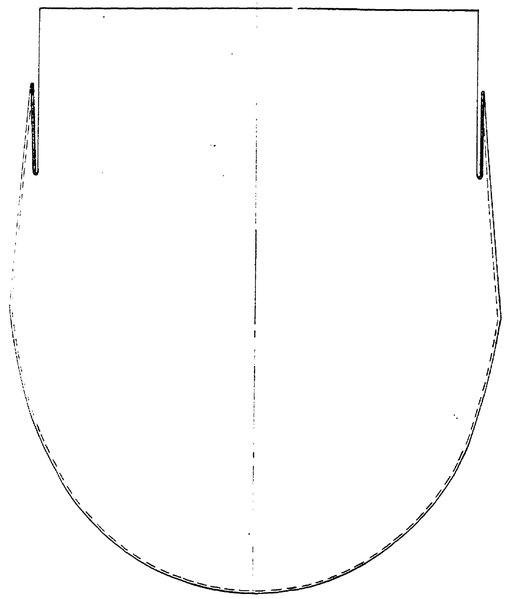

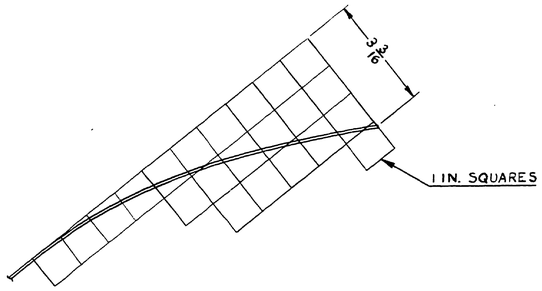

SECTION **A - A**
6 IN. = 1 FT.

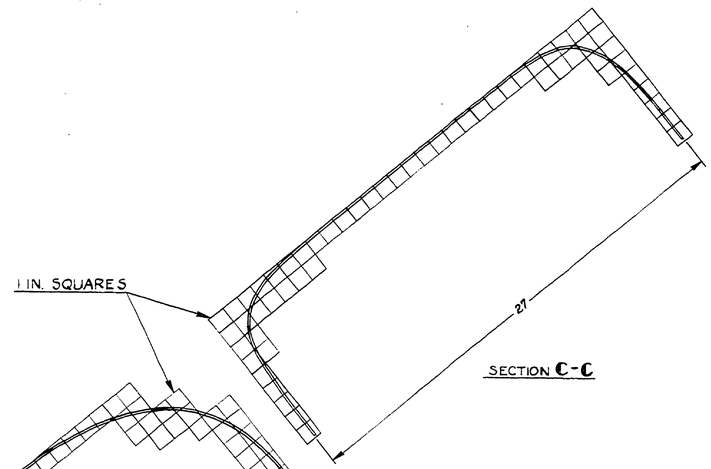

SECTION **C - C**

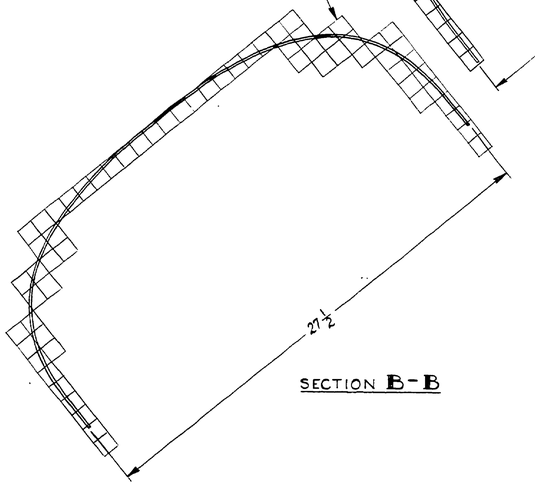

SECTION **B - B**

FOR FLAT PATTERN
DETAIL SEE DWG. 12432

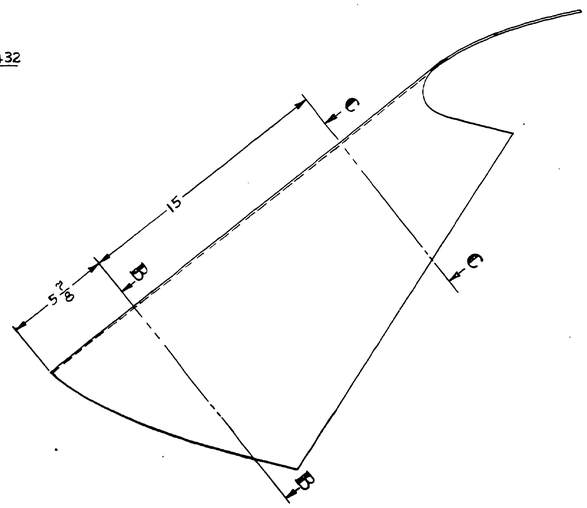

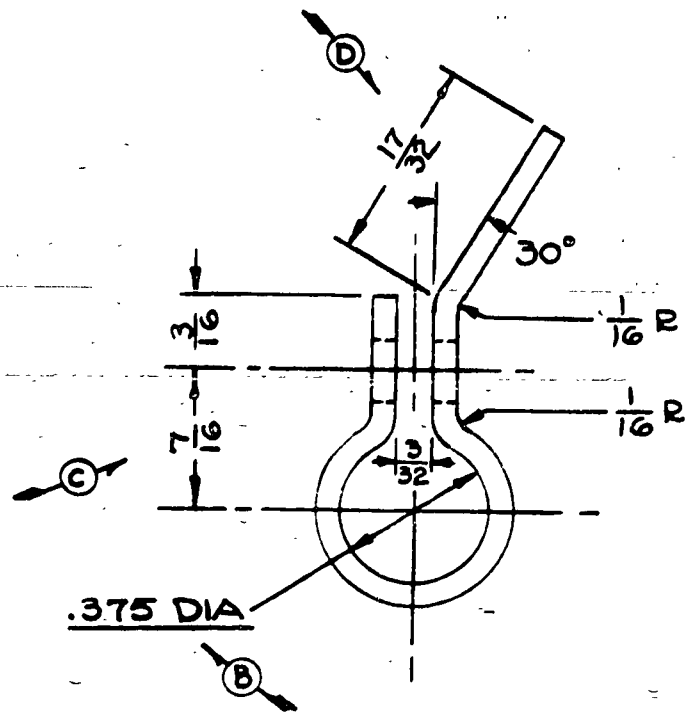

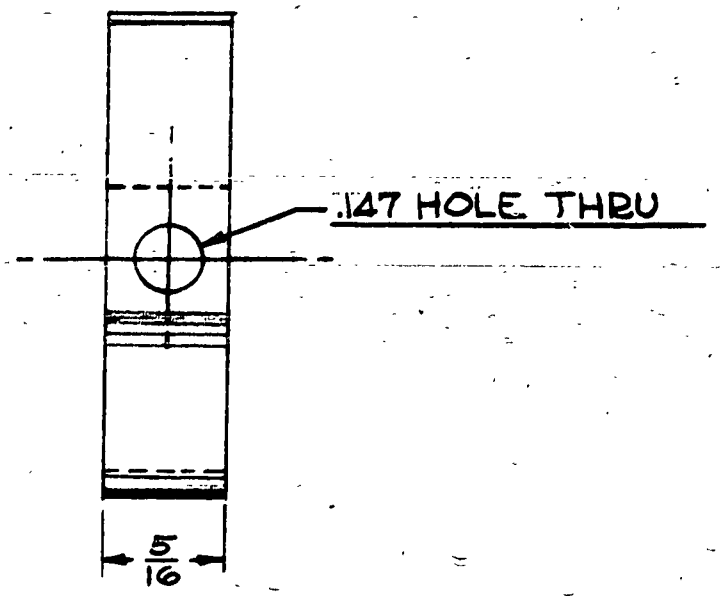

A

LIMITS, SHOP PRACTICES AND FINISH, UNLESS OTHERWISE NOTED, TO BE IN ACCORDANCE WITH PIPER SPECIFICATIONS 49 AND 519.

LTR.	REVISION	DATE	SR.	BY
E	REDRAWN WITHOUT CHANGE	4-8-44		CHS
D	½ DIM REM 7/32 DIM ADDED	9-8-43		CEK
C	7/16 WAS 3/8	8-13-43		WGT
B	375 WAS 3/8 D	4-29-43		CEK
A	1913, 12963 REM 2 WAS 4	5-16-43		CK

MODEL	PER SHIP	NEXT ASSEMBLY	SUPERSEDES	SUPERSEDED BY
J-3C-65	2	13233		
J-4E	2	13233		
J-4A	2	13233		
J-3	2	13233		

PIPER AIRCRAFT CORP.
LOCK HAVEN, PENNA.

PART No.	No. REQ.	SIZE	DESCRIPTION
		.062 X 5/16 X 2 1/2	*1025 STEEL

MATERIAL

SCALE TWICE SIZE

CLAMP-LIFT STRUT FAIRLEAD

DRAWN	CHECKED	APPROVED
Shaffner 4-8-44	R.E.T. 4-11-44	

12431

NO. 1954 ALBANENE A. O. E. SMITH CO., PGH., PA.

A 120

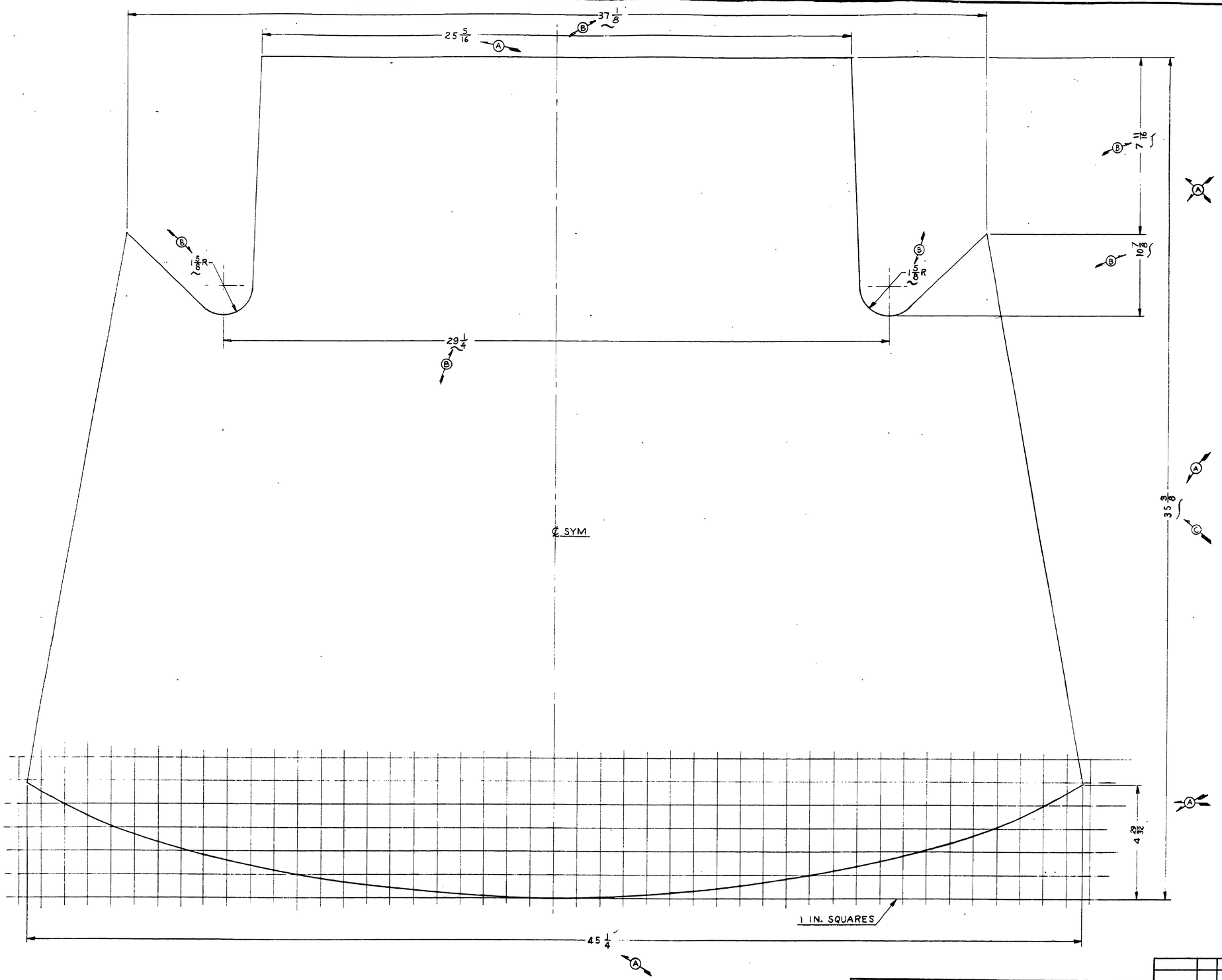

LET	REVISION	DATE	BY
C	35 3/8 WAS 35 5/8	2-27-51	I.M.M.
B	10 7/8 WAS 10 5/8, 7 11/16 WAS 7 5/8, 1/8 R WAS 1/4 R; 29 1/4 WAS 28 1/4, 37 1/8 WAS 36 7/8	9-15-50	K.J.
A	CONTOUR REV. 25 5/16 WAS 25 1/4; 45 1/4 WAS 45 3/4, 4 29/32 WAS 5 1/16; 35 3/8 WAS 35 1/8, 4 29/32 WAS 5 1/16	5-17-50	C.K.

MODEL/PER PLANE | NEXT ASSEMBLY | SUPERSEDES | SUP. BY

THIS DRAWING IS THE PROPERTY OF THE PIPER AIRCRAFT CORP. AND ITS POSSESSION BY UNAUTHORIZED PERSONS SHALL NOT BE CONSTRUED AS PERMISSION TO REPRODUCE FOR SALE, IN WHOLE OR IN PART, ANY DEVICES SHOWN THEREON.

PIPER AIRCRAFT CORP.
LOCK HAVEN, PENNA.

PART NO. | No. REQ. | MATERIAL

SCALE 6 IN = 1 FT. | TOTAL WT.—LBS.

FINISH—PIPER SPECIFICATION #10

MANUFACTURING PRACTICES—PIPER SPECIFICATION #8

WINDSHIELD (FLAT PATTERN)

C.E.K.	H.R.K.		
6-13-49	6-17-49		12432
DRAFTSMAN	CHECKER	STANDARDS	

Philadelphia Blue Print Co. 150 8-48

A859

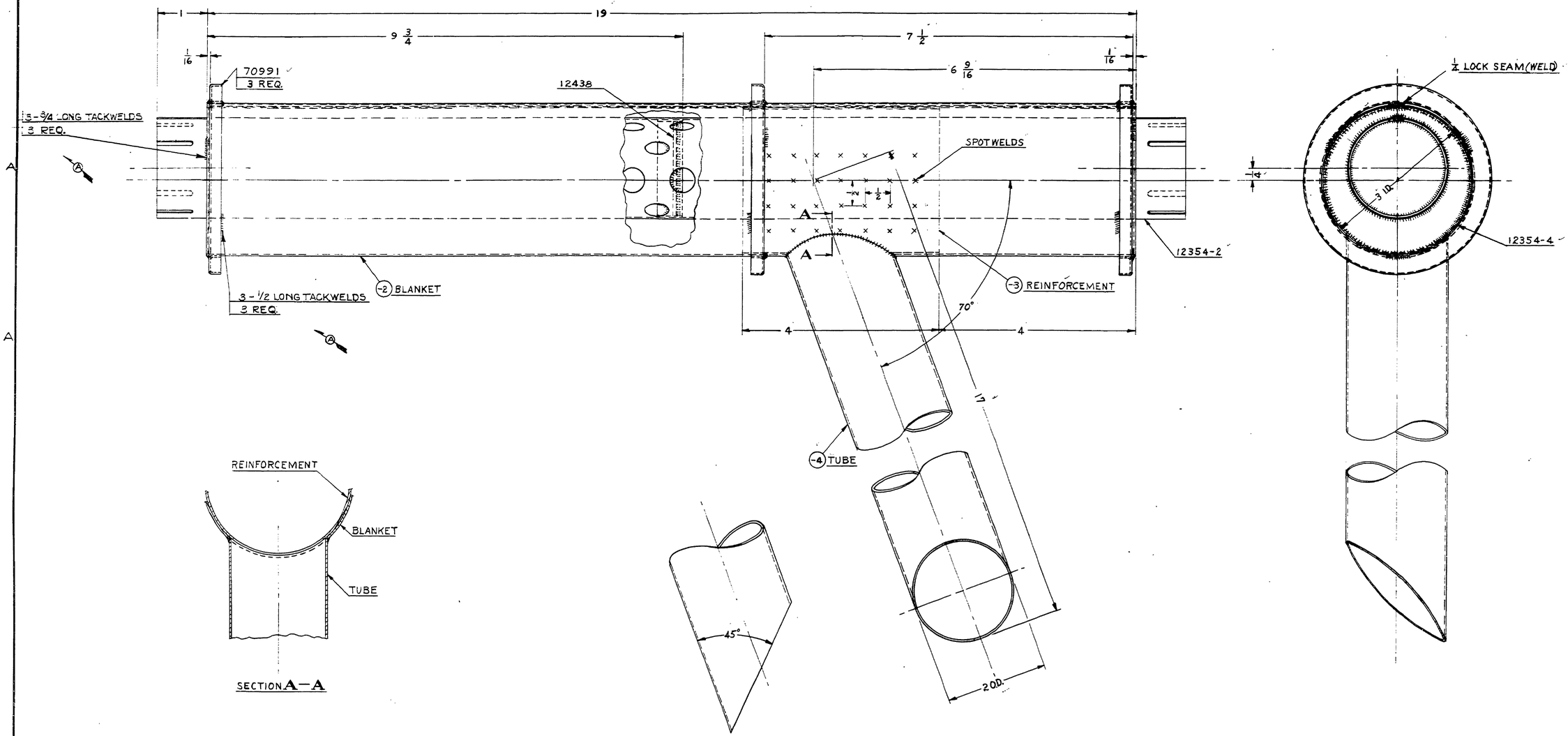

PART No.	No. REQ.	SIZE	DESCRIPTION
12438	1	PLATE ASSY.	
70991	3	SPACER	
12354-4	2	END	
12354-2	1	BAFFLE	
-4	1	2×.035×16	TYPE 347, ANN, 2D FIN. S.S. TUBE
-3	1	.032×4×9 3/8	TYPE 347, ANN, 2D FIN. ST. STL.
-2	1	.020×10×19	TYPE 347, ANN, 2D FIN. ST. STL.

SCALE FULL SIZE — TOTAL WT.—LBS.

FINISH—PIPER SPECIFICATION #10

MANUFACTURING PRACTICES—PIPER SPECIFICATION #9

MODEL | PER PLANE | NEXT ASSEMBLY | SUPERSEDES | SUP. BY

THIS DRAWING IS THE PROPERTY OF THE PIPER AIRCRAFT CORP. AND ITS POSSESSION BY UNAUTHORIZED PERSONS SHALL NOT BE CONSTRUED AS PERMISSION TO REPRODUCE FOR SALE IN WHOLE OR IN PART. ANY DEVICES SHOWN THEREON.

LET.	REVISION	DATE	BY
A	ADDED TACKWELD NOTES	4-18-41	[illegible]

PIPER AIRCRAFT CORP.
LOCK HAVEN, PENNA.

MUFFLER ASSEMBLY

DRAFTSMAN	CHECKER	STANDARDS
C. E. K. 6-15-49	H. R. K. 6-17-49	

12433

Philadelphia Blue Print Co. 150 8-1-46

A860

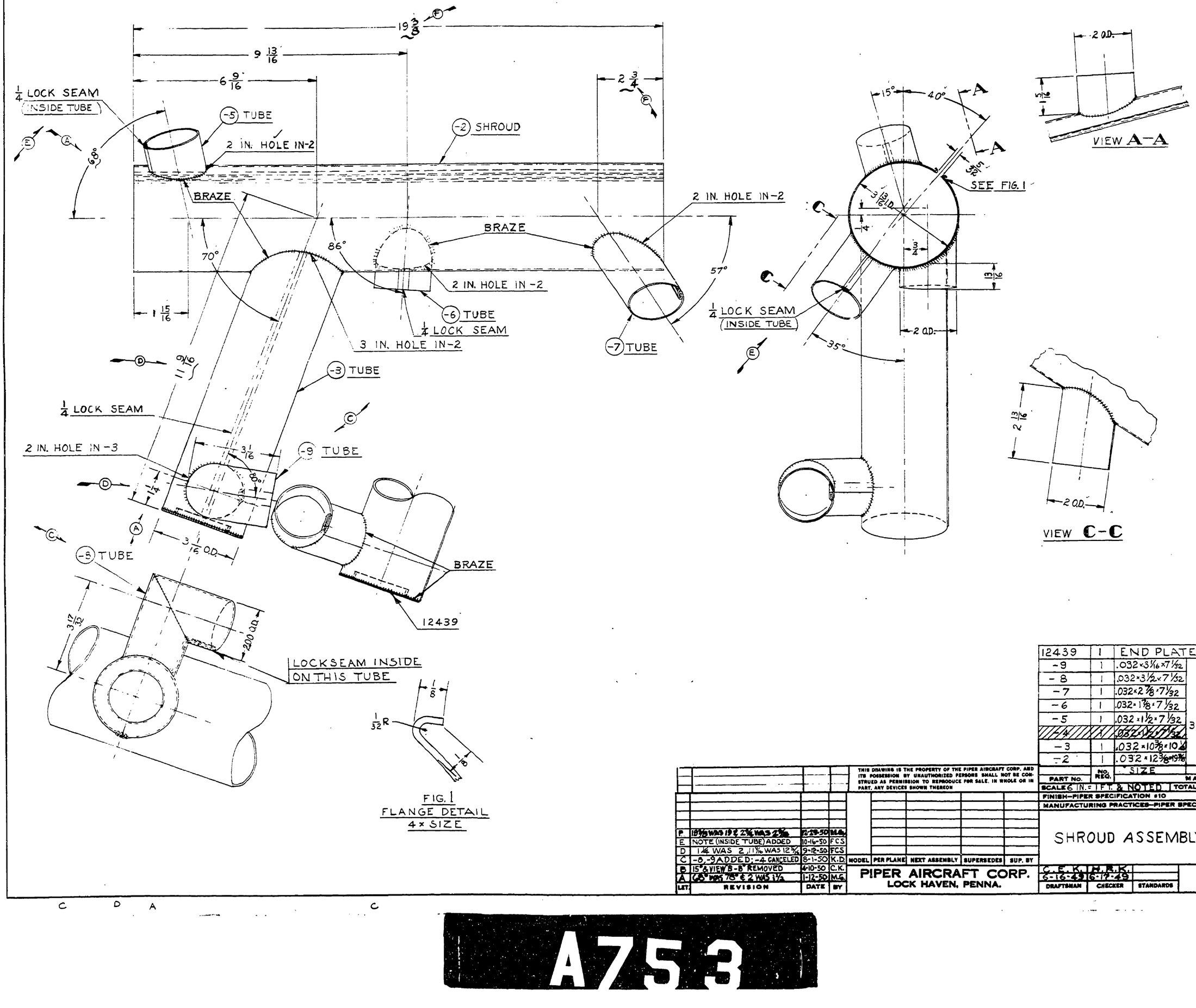

FIG. 1
FLANGE DETAIL
4 × SIZE

12439	1	END PLATE	
-9	1	.032×3 1/16×7 1/32	
-8	1	.032×3 1/2×7 1/32	
-7	1	.032×2 7/8×7 1/32	
-6	1	.032×1 7/8×7 1/32	
-5	1	.032×1 1/2×7 1/32	3S-1/2 H. ALUM.
-4	1	.032×1 1/2×7 1/32	
-3	1	.032×10 3/8×10 1/2	
-2	1	.032×12 3/8×19 5/8	
PART NO.	NO. REQ.	SIZE	DESCRIPTION MATERIAL

SCALE 6 IN. = 1 FT. & NOTED | TOTAL WT.—LBS.

FINISH—PIPER SPECIFICATION #10

MANUFACTURING PRACTICES—PIPER SPECIFICATION #9

LET.	REVISION	DATE	BY
F	19 5/8 WAS 19 & 2 3/4 WAS 2 5/8	12-29-50	M.G.
E	NOTE (INSIDE TUBE) ADDED	10-16-50	F.C.S.
D	1/4 WAS 2 11/16 WAS 12 3/4	9-12-50	F.C.S.
C	-8, -9 ADDED; -4 CANCELED	8-1-50	K.D.
B	15° & VIEW B-B REMOVED	4-10-50	C.K.
A	C-B WAS 75° & 2 WAS 1 1/2	1-12-50	M.G.

THIS DRAWING IS THE PROPERTY OF THE PIPER AIRCRAFT CORP. AND ITS POSSESSION BY UNAUTHORIZED PERSONS SHALL NOT BE CONSTRUED AS PERMISSION TO REPRODUCE FOR SALE, IN WHOLE OR IN PART. ANY DEVICES SHOWN THEREON

MODEL	PER PLANE	NEXT ASSEMBLY	SUPERSEDES	SUP. BY

PIPER AIRCRAFT CORP.
LOCK HAVEN, PENNA.

SHROUD ASSEMBLY-MUFFLER

C. E. K.	H. R. K.		12436
6-16-49	6-17-49		
DRAFTSMAN	CHECKER	STANDARDS	

753

A753

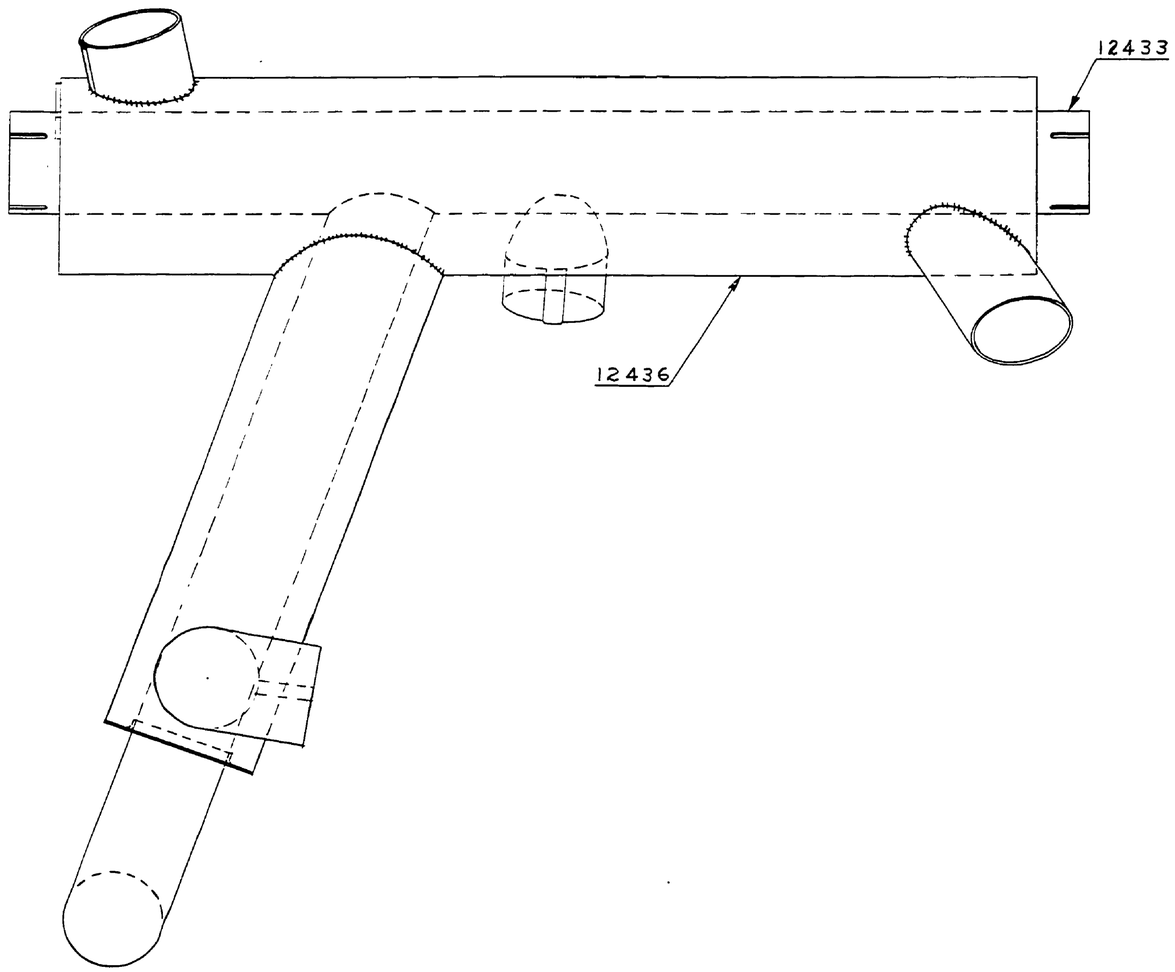

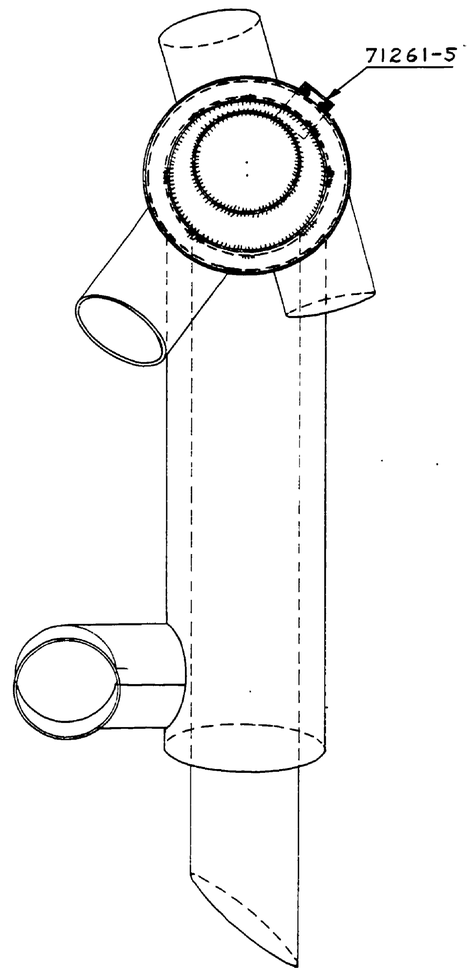

71261-5	1	CLIP ASSY.
12436	1	SHROUD ASSY.
12433	1	MUFFLER ASSY.
PART No.	NO. REQ.	NAME / MATERIAL

SCALE 6 IN. = 1 FT — TOTAL WT.—LBS.

FINISH—PIPER SPECIFICATION #10

MANUFACTURING PRACTICES—PIPER SPECIFICATION #9

MUFFLER ASSEMBLY (COMPLETE)

THIS DRAWING IS THE PROPERTY OF THE PIPER AIRCRAFT CORP. AND ITS POSSESSION BY UNAUTHORIZED PERSONS SHALL NOT BE CONSTRUED AS PERMISSION TO REPRODUCE FOR SALE, IN WHOLE OR IN PART, ANY DEVICES SHOWN THEREON

LET.	REVISION	DATE	BY

MODEL	PER PLANE	NEXT ASSEMBLY	SUPERSEDES	SUP. BY

PIPER AIRCRAFT CORP.
LOCK HAVEN, PENNA.

C. E. K.	H. R. K.		
6-16-49	6-17-49		
DRAFTSMAN	CHECKER	STANDARDS	12437

A754

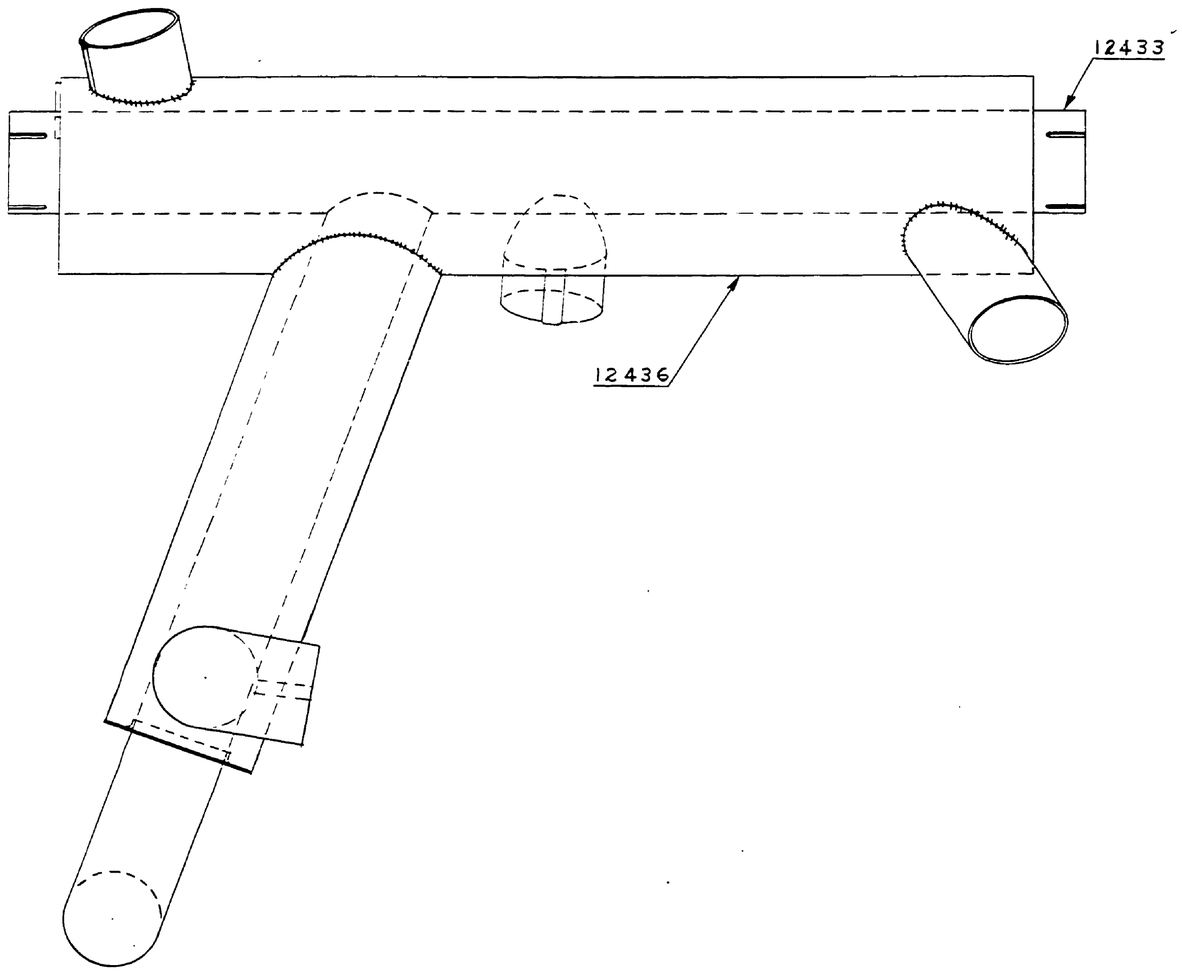

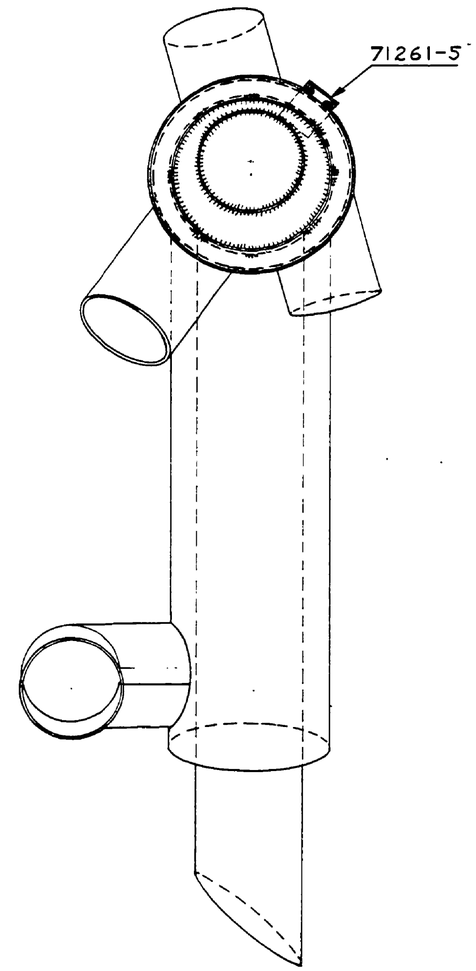

71261-5	1	CLIP ASSY.
12436	1	SHROUD ASSY.
12433	1	MUFFLER ASSY.
PART NO.	NO. REQ.	NAME
		MATERIAL
SCALE 6 IN. = 1 FT		TOTAL WT.—LBS.

FINISH—PIPER SPECIFICATION #10

MANUFACTURING PRACTICES—PIPER SPECIFICATION #9

THIS DRAWING IS THE PROPERTY OF THE PIPER AIRCRAFT CORP. AND ITS POSSESSION BY UNAUTHORIZED PERSONS SHALL NOT BE CONSTRUED AS PERMISSION TO REPRODUCE FOR SALE, IN WHOLE OR IN PART, ANY DEVICES SHOWN THEREON

LET.	REVISION	DATE	BY

MODEL	PER PLANE	NEXT ASSEMBLY	SUPERSEDES	SUP. BY

PIPER AIRCRAFT CORP.
LOCK HAVEN, PENNA.

MUFFLER ASSEMBLY
(COMPLETE)

DRAFTSMAN	CHECKER	STANDARDS
C. E. K. 6-16-49	H. R. K. 6-17-49	

12437

A755

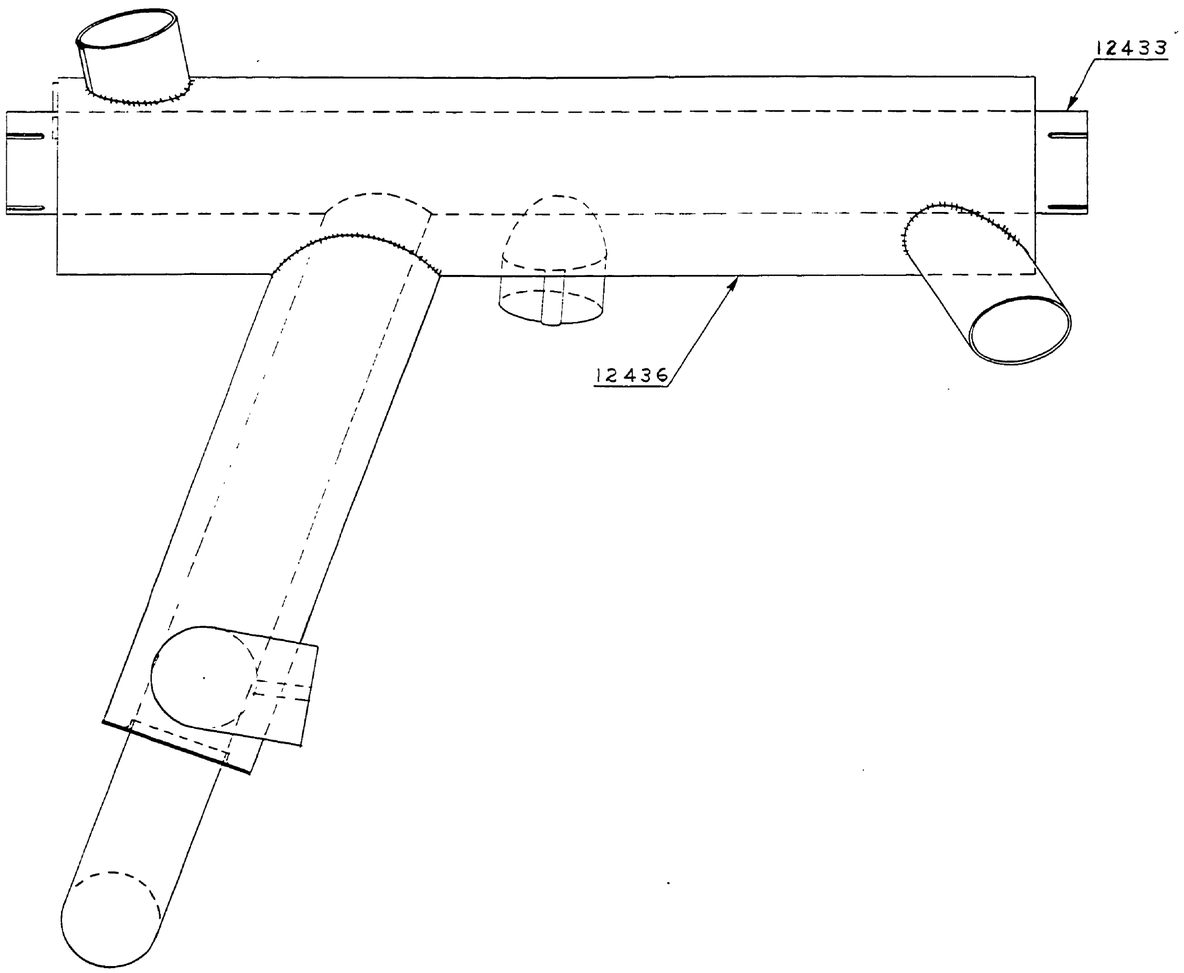

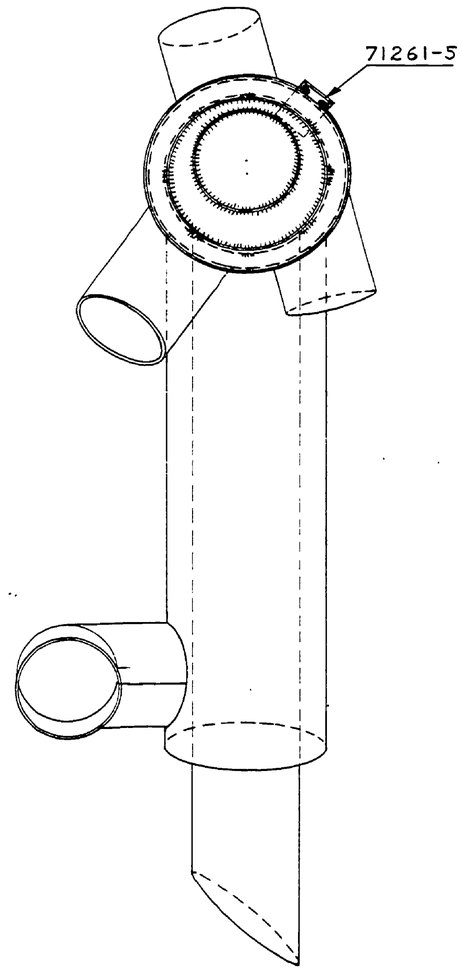

71261-5	1	CLIP ASSY.
12436	1	SHROUD ASSY.
12433	1	MUFFLER ASSY.
PART No.	NO. REQ.	NAME
		MATERIAL

SCALE 6 IN. = 1 FT — TOTAL WT.–LBS.

FINISH–PIPER SPECIFICATION #10

MANUFACTURING PRACTICES–PIPER SPECIFICATION #9

THIS DRAWING IS THE PROPERTY OF THE PIPER AIRCRAFT CORP. AND ITS POSSESSION BY UNAUTHORIZED PERSONS SHALL NOT BE CONSTRUED AS PERMISSION TO REPRODUCE FOR SALE, IN WHOLE OR IN PART, ANY DEVICES SHOWN THEREON

LET.	REVISION	DATE	BY

MODEL	PER PLANE	NEXT ASSEMBLY	SUPERSEDES	SUP. BY

PIPER AIRCRAFT CORP.
LOCK HAVEN, PENNA.

MUFFLER ASSEMBLY
(COMPLETE)

DRAFTSMAN	CHECKER	STANDARDS
C. E. K. 6-16-49	H. E. K. 6-17-49	

12437

A827

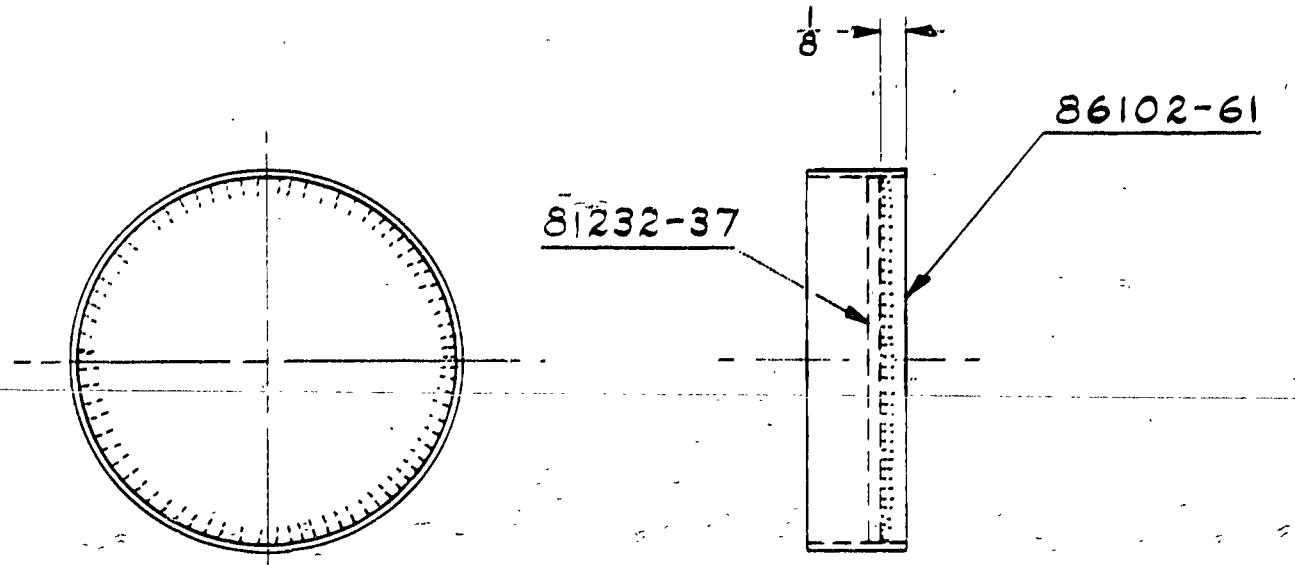

PART No.	No. REQ.	NAME / MATERIAL
86102-61	1	BUSHING
81232-37	1	DISC

SCALE FULL SIZE — TOTAL WT.–LBS.

FINISH–PIPER SPECIFICATION #10

MANUFACTURING PRACTICES–PIPER SPECIFICATION #9

PLATE ASSEMBLY– MUFFLER BAFFLE

LET.	REVISION	DATE	BY

MODEL	PER PLANE	NEXT ASSEMBLY	SUPERSEDES	SUP. BY

THIS DRAWING IS THE PROPERTY OF THE PIPER AIRCRAFT CORP. AND ITS POSSESSION BY UNAUTHORIZED PERSONS SHALL NOT BE CONSTRUED AS PERMISSION TO REPRODUCE FOR SALE, IN WHOLE OR IN PART, ANY DEVICES SHOWN THEREON.

PIPER AIRCRAFT CORP.
LOCK HAVEN, PENNA.

DRAFTSMAN	CHECKER	STANDARDS
C.E.K. 6-16-49	H.R.K. 6-17-49	

12438

121

A 121

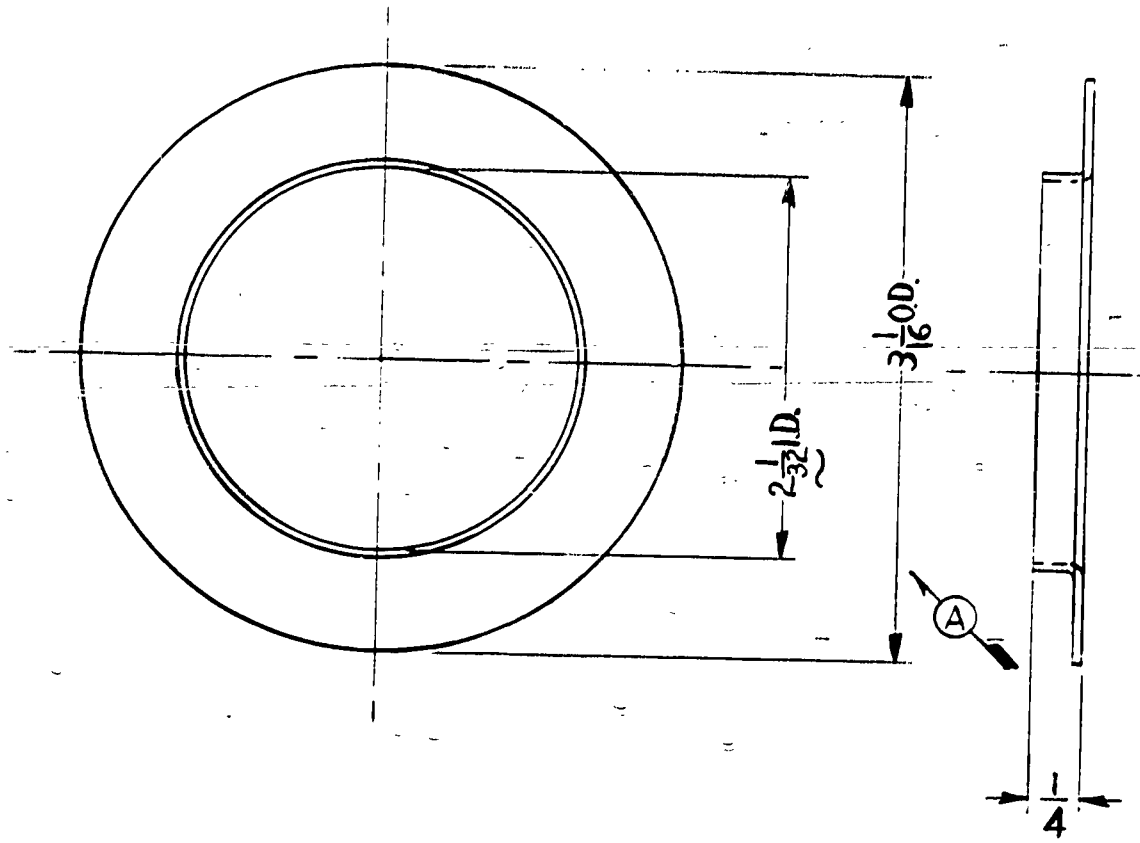

										.032×3 1/16×3 1/16	3S-1/2 H. ALUM.
										SIZE	DESCRIPTION
									PART No.	No. REQ.	MATERIAL

SCALE FULL SIZE — TOTAL WT.–LBS.

FINISH–PIPER SPECIFICATION #10

MANUFACTURING PRACTICES–PIPER SPECIFICATION #9

PLATE–TAILPIPE SHROUD END

MODEL	PER PLANE	NEXT ASSEMBLY	SUPERSEDES	SUP. BY

THIS DRAWING IS THE PROPERTY OF THE PIPER AIRCRAFT CORP. AND ITS POSSESSION BY UNAUTHORIZED PERSONS SHALL NOT BE CONSTRUED AS PERMISSION TO REPRODUCE FOR SALE, IN WHOLE OR IN PART, ANY DEVICES SHOWN THEREON.

LET.	REVISION	DATE	BY
A	2 1/32 I.D. WAS 2 I.D.	12-5-49	K.D.

PIPER AIRCRAFT CORP.
LOCK HAVEN, PENNA.

DRAFTSMAN	CHECKER	STANDARDS
C.E.K. 6-16-49	H.R.K. 6-17-49	

12439

122

A122

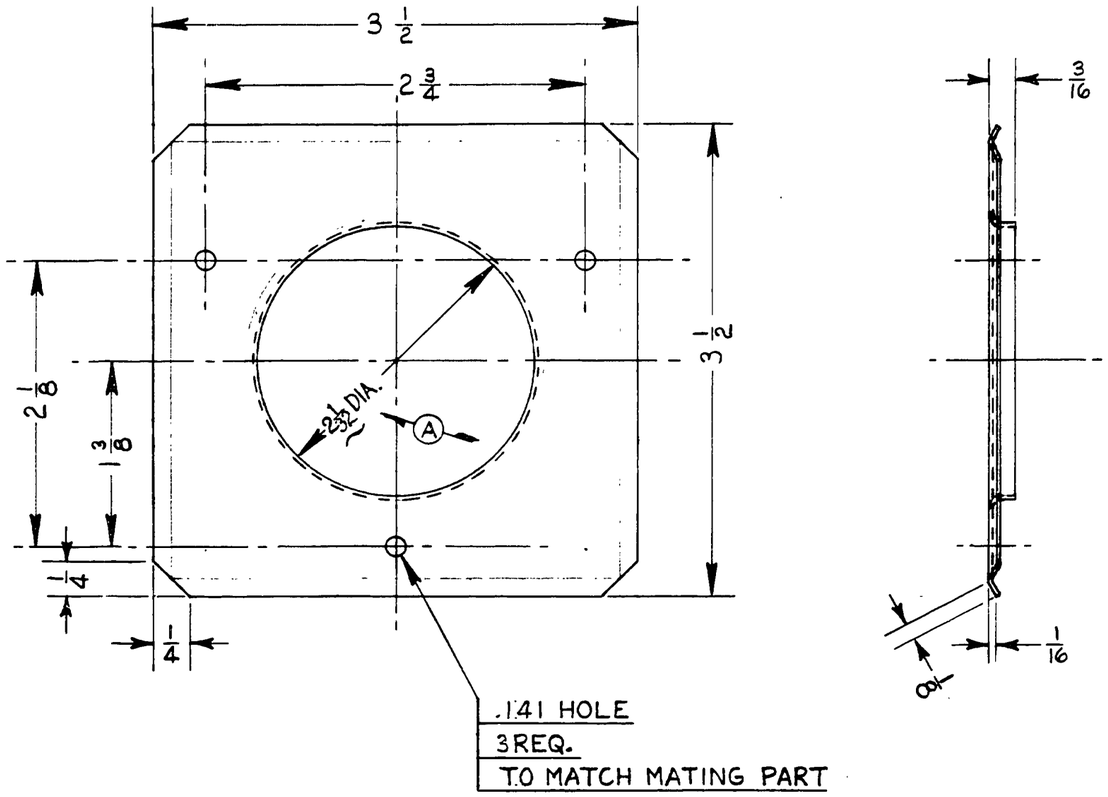

LET.	REVISION	DATE	BY
A	2 1/2 DIA. WAS 2 DIA.	12-5-49	K.D.

MODEL	PER PLANE	NEXT ASSEMBLY	SUPERSEDES	SUP. BY

THIS DRAWING IS THE PROPERTY OF THE PIPER AIRCRAFT CORP. AND ITS POSSESSION BY UNAUTHORIZED PERSONS SHALL NOT BE CONSTRUED AS PERMISSION TO REPRODUCE FOR SALE, IN WHOLE OR IN PART. ANY DEVICES SHOWN THEREON.

PIPER AIRCRAFT CORP.
LOCK HAVEN, PENNA.

PART No.	No. REQ.	SIZE	MATERIAL
		.032 × 3 1/2 × 3 1/2	35-1/2 H ALUM.

SCALE FULL SIZE — TOTAL WT.—LBS.

FINISH—PIPER SPECIFICATION #10

MANUFACTURING PRACTICES—PIPER SPECIFICATION #9

PLATE - CABIN AIR INLET

DRAFTSMAN	CHECKER	STANDARDS
R. REEDER 6-16-49	H.R.K. 6-17-49	

12440

12202 12401 520

A 520

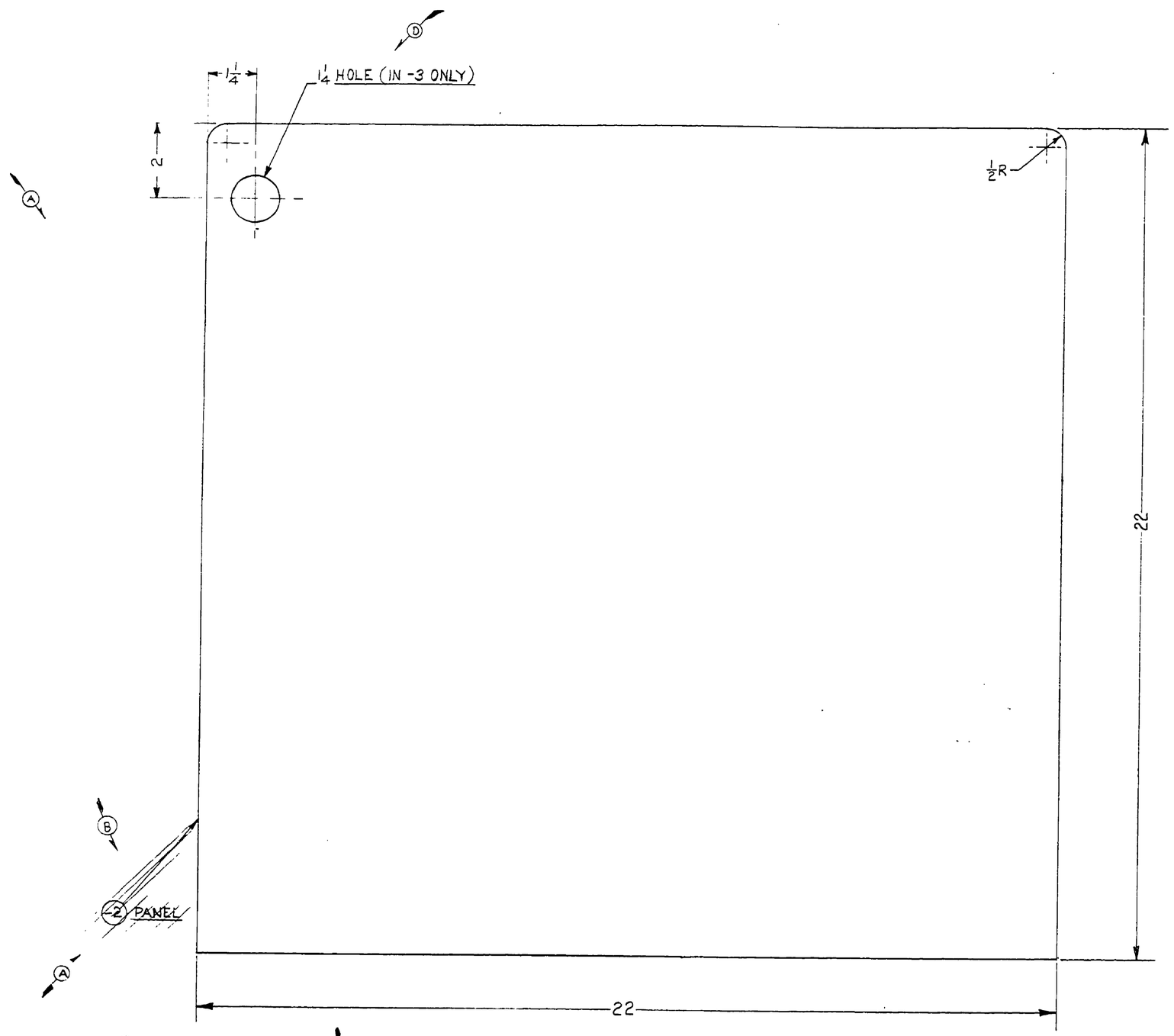

12443 SHOWN
12443-3 SHOWN & NOTED

LET.	REVISION	DATE	BY
E	"NEAR SIDE" WAS "FAR SIDE"	6-28-51	M.G.
D	-3 & 1¼ HOLE ADDED; FAR SIDE WAS ONE SIDE	1-5-51	HRK
C	NOTE 1 ADDED	12-11-50	FCS
B	11038 & ATTACH. REMOVED; -2 CANCELED; TITLE REVISED	12-12-50	C.M.
	-2 ADDED, .032 24S-T ALUM.		
A	WAS 3/16 3 PLY BIRCH PLYWOOD, TITLE REVISED, 11038 & ATTACH. ADDED	12-7-49	K.D.

THIS DRAWING IS THE PROPERTY OF THE PIPER AIRCRAFT CORP. AND ITS POSSESSION BY UNAUTHORIZED PERSONS SHALL NOT BE CONSTRUED AS PERMISSION TO REPRODUCE FOR SALE, IN WHOLE OR IN PART, ANY DEVICES SHOWN THEREON

MODEL	PER PLANE	NEXT ASSEMBLY	SUPERSEDES	SUP. BY

PIPER AIRCRAFT CORP.
LOCK HAVEN, PENNA.

PART NO.	NO. REQ.	SIZE	DESCRIPTION / MATERIAL
-2	V	.032 x 22 x 22	24S-T. ALUMINUM

SCALE 6 IN. = 1 FT. — TOTAL WT.—LBS.
FINISH—PIPER SPECIFICATION #10
MANUFACTURING PRACTICES—PIPER SPECIFICATION #9

PANEL — BAGGAGE COMPARTMENT REAR

DRAFTSMAN	CHECKER	STANDARDS
R. REEDER 6-17-49	H.R.K. 6-22-49	

12443

A828

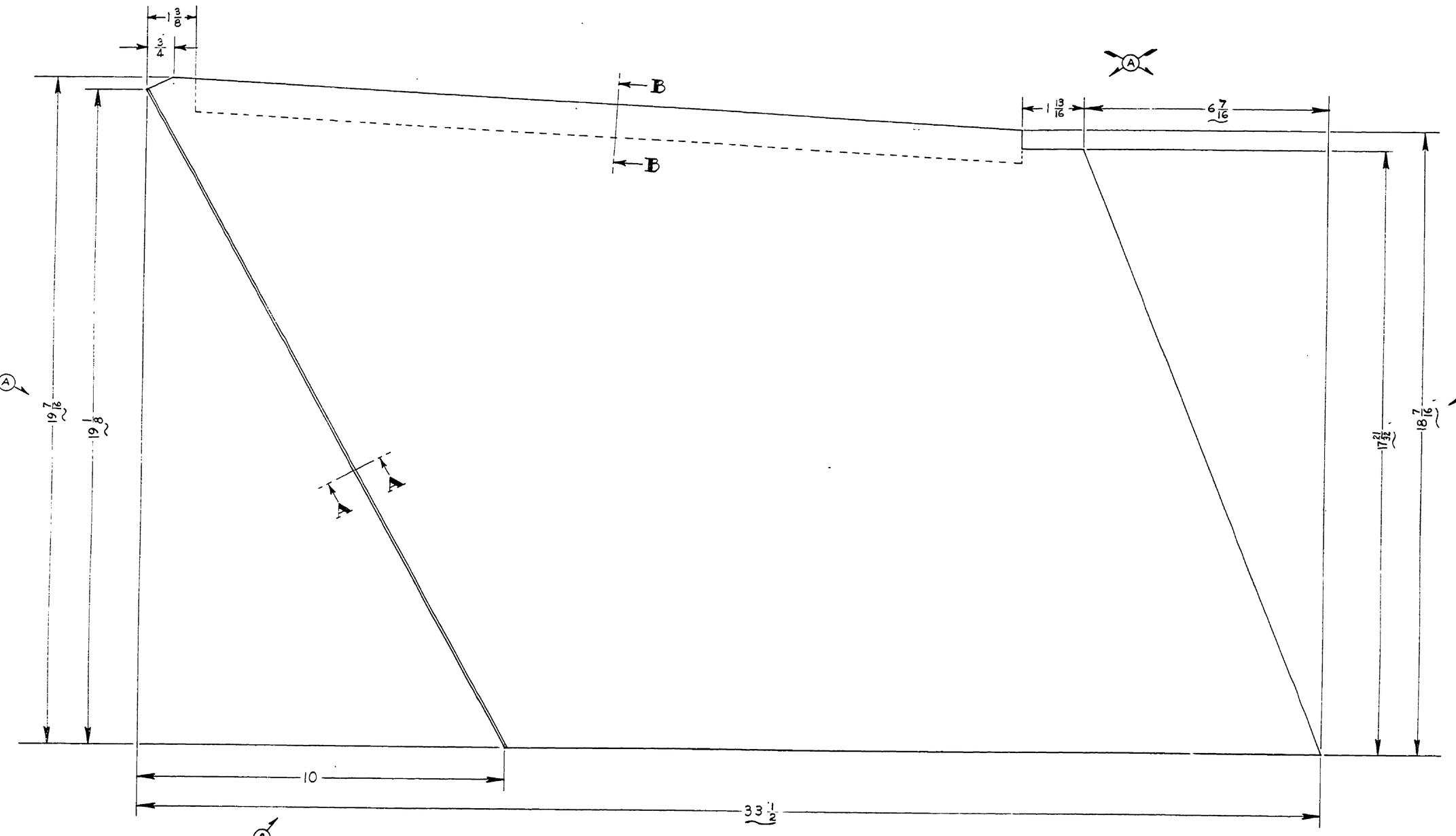

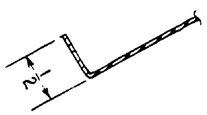

SECTION A-A
FULL SIZE

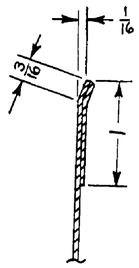

SECTION B-B
FULL SIZE

NOTE :
1. SPRAY FAR SIDE WITH SOUND DEADENER
*A-31 PURCH. NOX-RUST CHEMICAL CORP.

LET.	REVISION	DATE	BY
B	NOTE 1 ADDED	12-11-50	FCS
A	18 3/16 WAS 18 1/2 ; 17 3/16 WAS 17 3/4 ; 33 1/2 WAS 34 ; 17 3/4 WAS 17 5/16 ; 6 7/16 WAS 7 ; 19 7/16 WAS 19 ; 19 1/8 WAS 19 1/2 ; 10 WAS 10 3/16	5-17-50	G.K.

THIS DRAWING IS THE PROPERTY OF THE PIPER AIRCRAFT CORP. AND ITS POSSESSION BY UNAUTHORIZED PERSONS SHALL NOT BE CONSTRUED AS PERMISSION TO REPRODUCE FOR SALE, IN WHOLE OR IN PART, ANY DEVICES SHOWN THEREON

MODEL	PER PLANE	NEXT ASSEMBLY	SUPERSEDES	SUP. BY

PIPER AIRCRAFT CORP.
LOCK HAVEN, PENNA.

PART NO.	NO. REQ.	SIZE	MATERIAL
		.020x20 7/16x34	3S-1/2H. ALUM.
SCALE 6 IN. = 1 FT. & NOTED.			TOTAL WT.-LBS.
FINISH-PIPER SPECIFICATION #10			
MANUFACTURING PRACTICES-PIPER SPECIFICATION #9			

PANEL - COCKPIT
LEFT REAR

DRAFTSMAN	CHECKER	STANDARDS
R. REEDER 6-17-49	H. R. K. 6-21-49	

12444

A756

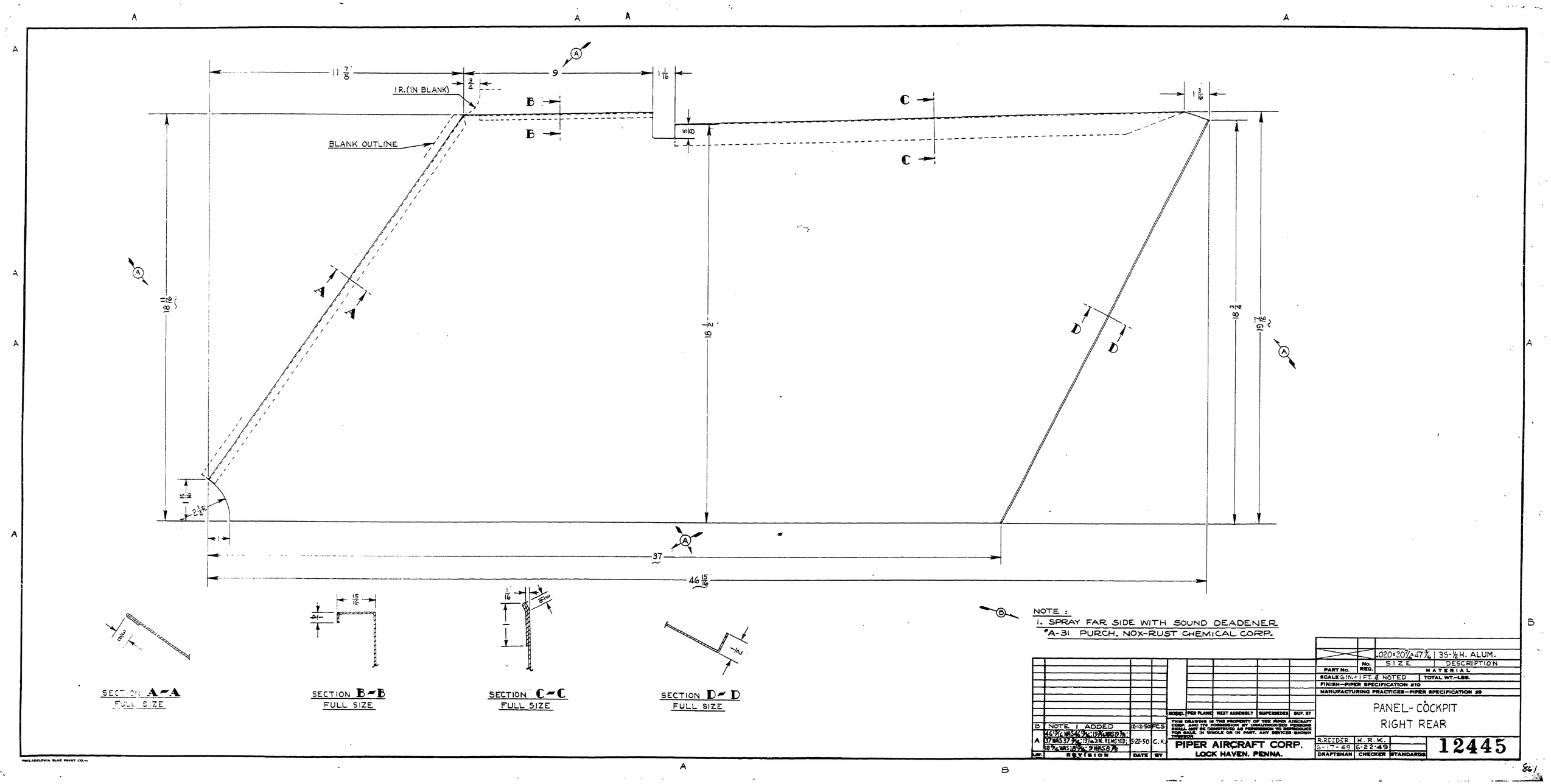

11 7/8
9
1 1/16
3/4
1 R. (IN BLANK)
BLANK OUTLINE
B
B
C
C
5/8
1 3/16
18 11/16
18 1/2
18 3/4
19 7/16
A
A
D
D
1 15/16
2 1/4 R
1
37
46 15/16
SECTION A-A
FULL SIZE
SECTION B-B
FULL SIZE
SECTION C-C
FULL SIZE
SECTION D-D
FULL SIZE
NOTE :
1. SPRAY FAR SIDE WITH SOUND DEADENER
#A-31 PURCH. NOX-RUST CHEMICAL CORP.
B NOTE 1 ADDED 12-12-50 FCS
A 46 15/16 WAS 46 15/16; 19 7/16 WAS 19 3/8; 37 WAS 37 3/16; 19 1/16 DIM. REMOVED; 18 3/4 WAS 18 15/16; 9 WAS 8 7/8 5-22-50 C.K.
LTR. REVISION DATE BY
MODEL PER PLANE NEXT ASSEMBLY SUPERSEDES SUP. BY
THIS DRAWING IS THE PROPERTY OF THE PIPER AIRCRAFT CORP. AND ITS POSSESSION BY UNAUTHORIZED PERSONS SHALL NOT BE CONSTRUED AS PERMISSION TO REPRODUCE FOR SALE, IN WHOLE OR IN PART, ANY DEVICES SHOWN THEREON.
PIPER AIRCRAFT CORP.
LOCK HAVEN, PENNA.
.020×20 7/16×47 13/16 | 3S-1/2 H. ALUM.
PART No. No. REQ. SIZE DESCRIPTION
MATERIAL
SCALE 6 IN. = 1 FT. & NOTED TOTAL WT.-LBS.
FINISH-PIPER SPECIFICATION #10
MANUFACTURING PRACTICES-PIPER SPECIFICATION #9
PANEL- COCKPIT
RIGHT REAR
R. REEDER H. R. K.
6-17-49 6-22-49
DRAFTSMAN CHECKER STANDARDS
12445

A861

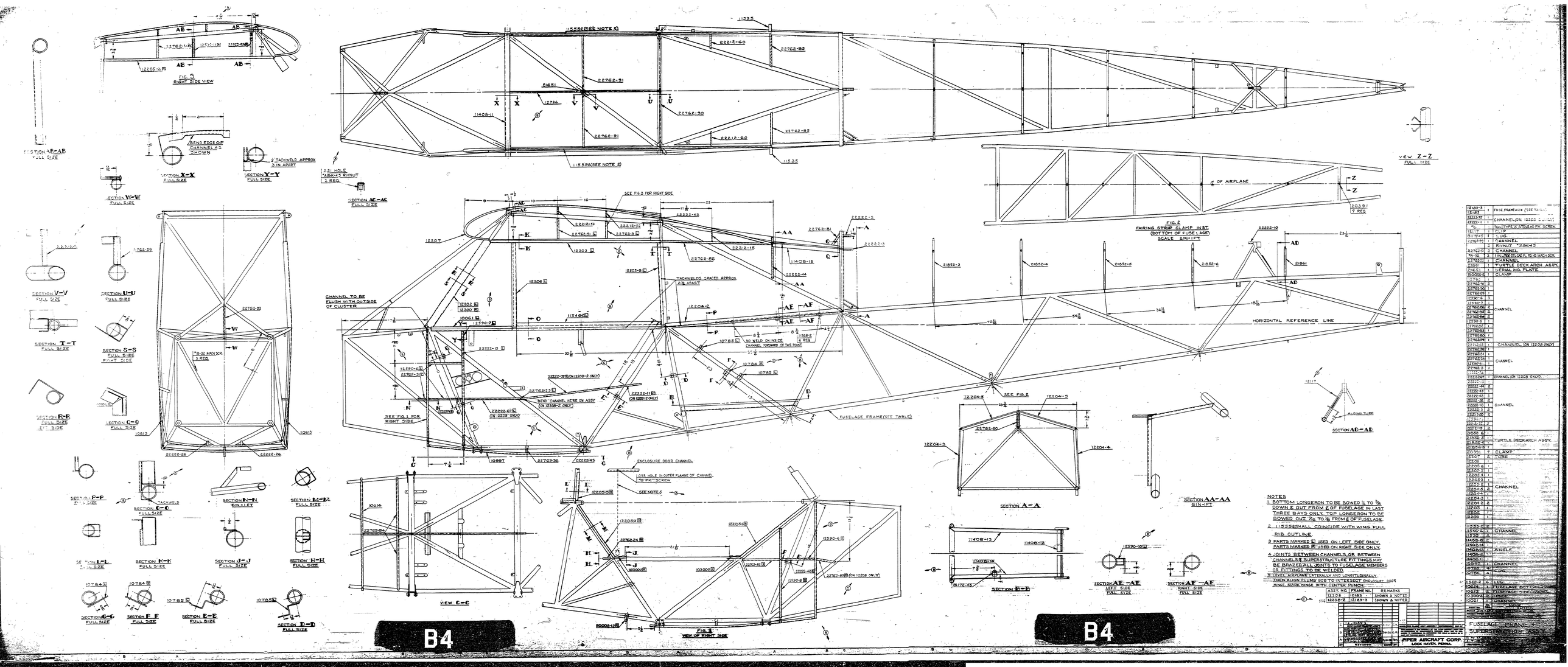
FIG 3
RIGHT SIDE VIEW
FIG 4
VIEW OF RIGHT SIDE
VIEW C-C
VIEW Z-Z
FULL SIZE
FIG 2
FAIRING STRIP CLAMP INST
(BOTTOM OF FUSELAGE)
SCALE 2 IN/FT
SECTION A-A
SECTION AA-AA
SECTION AB-AB
SECTION AC-AC
SECTION AD-AD
SECTION AE-AE
SECTION AF-AF
SECTION B-B
SECTION C-C
SECTION D-D
SECTION E-E
SECTION F-F
SECTION G-G
SECTION H-H
SECTION J-J
SECTION K-K
SECTION L-L
SECTION M-M
SECTION N-N
SECTION P-P
SECTION R-R
SECTION S-S
SECTION T-T
SECTION U-U
SECTION V-V
SECTION W-W
SECTION X-X
SECTION Y-Y
HORIZONTAL REFERENCE LINE
FUSELAGE FRAME(SEE TABLE)
CHANNEL TO BE FLUSH WITH OUT SIDE OF CLUSTER
TACKWELDS SPACED APPROX 2½ APART
NO WELD ON INSIDE CHANNEL FORWARD OF THIS POINT
BEND CHANNEL HERE ON ASSY (ON 12208-2 ONLY)
ENCLOSURE DOOR CHANNEL
SEE FIG 1 FOR RIGHT SIDE
SEE FIG 3 FOR RIGHT SIDE
SEE FIG 2
SEE NOTE 5
BEND EDGE OF CHANNEL AS SHOWN
TACKWELD APPROX 3 IN APART
.281 HOLE FOR AN4-5 RIVNUT 5 REQ.
.1285 HOLE IN OUTER FLANGE OF CHANNEL FOR #6 PK SCREW
OF AIRPLANE
7 REQ
*AN-32 MACHINE 3 REQ.
ANGLE
TUBE
AN3960 TUBE
11535
11535A(SEE NOTE 2)
11535B(SEE NOTE 2)
22812-60
22762-85
22762-91
22762-90
22762-83
22812-50
11408-11
81631
12796
22762-81
22222-45
22222-3
22222-44
22222-15
11408-15
22762-86
12203
12205-63
12206
12202
12200
10061
12207
11540
12590-7
12590-6
22762-87
22222-13
22222-11
22222-12
22222-10
22222-9
22222-8
22222-7
22222-6
22222-5
22222-4
22222-3
22222-2
22222-1
22222-26
22222-43
22222-69
22762-23
22762-26
22762-84
10997
10614
10613
10784
10785
12204-1
12204-2
12204-3
12204-4
12204-5
22762-80
11408-13
11408-12
11408-14
12590-10
12205-64
12205-65
12205-66
12205-67
12205-68
12205-69
12205-70
12205-71
12205-72
12205-73
12205-74
12205-75
12205-76
12205-77
12205-78
12205-79
12205-80
12205-81
12205-82
12205-83
12205-84
12205-85
12205-86
12205-87
12205-88
12205-89
12205-90
12205-91
12205-92
12205-93
12205-94
12205-95
12205-96
12205-97
12205-98
12205-99
12205-100
12205-101
12205-102
12205-103

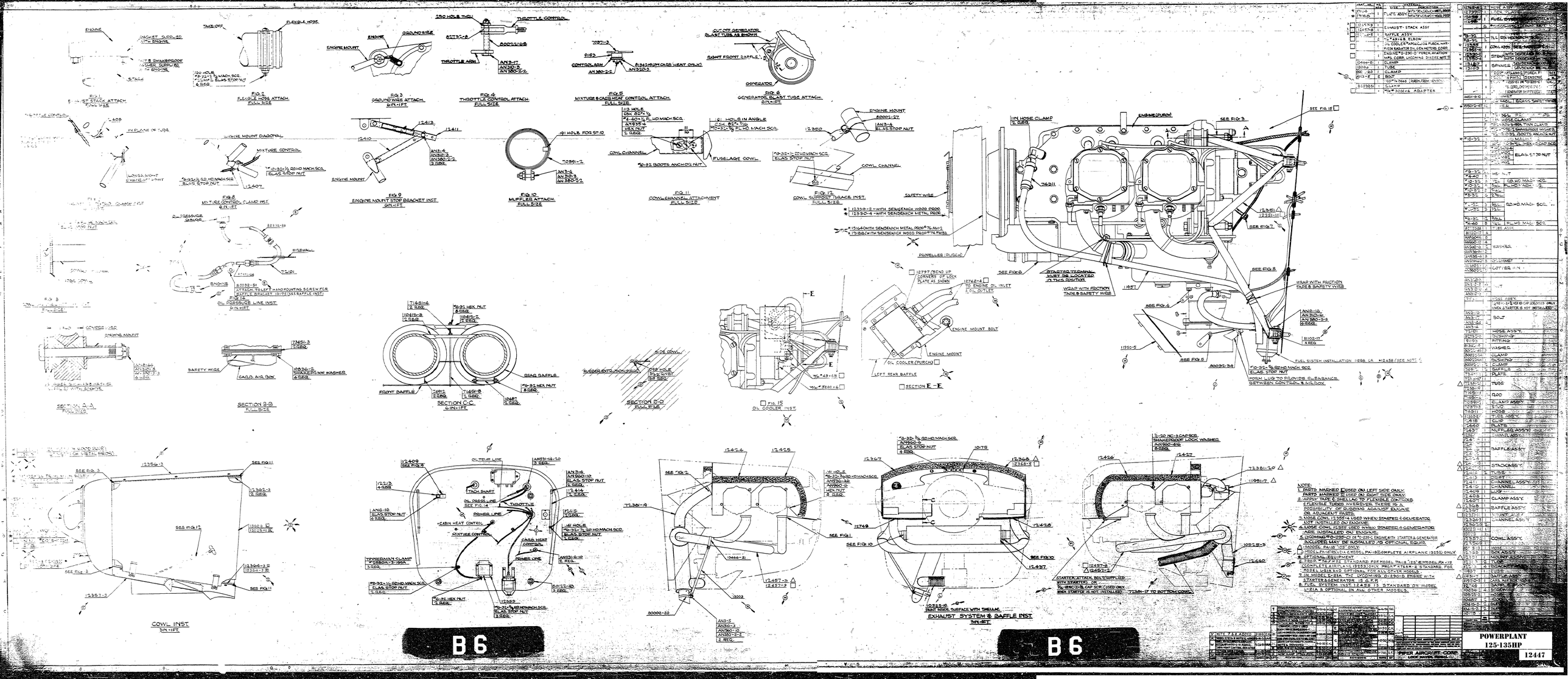

PART NO.	QTY.	DESCRIPTION
12760-6	2	HOSE ASSY.
12760	1	COIL ASSY.
12760-1	1	COIL ASSY.
12760-2	1	FUEL SYSTEM
12760-3	1	FUEL SYSTEM
12760-4	1	FUEL SYSTEM
12457-8	1	EXHAUST STACK ASSY
12457-9	1	BAFFLE ASSY.
12457-10	1	BAFFLE ASSY.
12457-11	1	BAFFLE ASSY.
12457-12	1	BAFFLE ASSY.
12457-13	1	BAFFLE ASSY.

WAS PART #1020

RIB BRACE WRAPPED WITH FRICTION TAPE & ENDS OF CLOTH TAPE TIED, AS SHOWN.

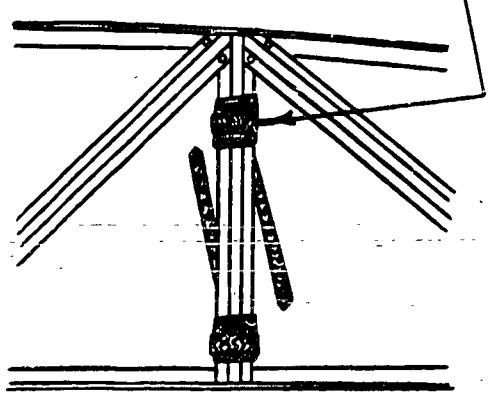

FIG. 3 — METHOD OF ATTACHING TAPE AT WING BUTT RIB

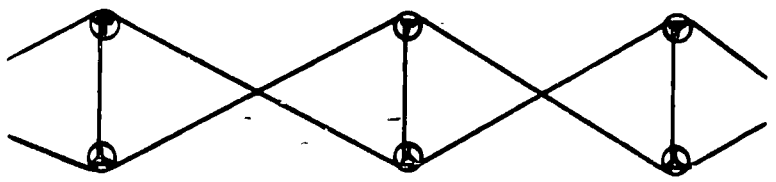

FIG. 2 — TYPICAL SPANWISE CROSS SECTION

NOTE: AT TOP OF RIBS, TAPE IS WRAPPED TO FRONT OF BRACE; AT BOTTOM OF RIBS, TAPE IS WRAPPED TO REAR OF BRACE, AS SHOWN IN FIG. 1.

FRONT OF SHIP

VERTICAL BRACE MIDWAY BETWEEN FRONT & REAR SPARS

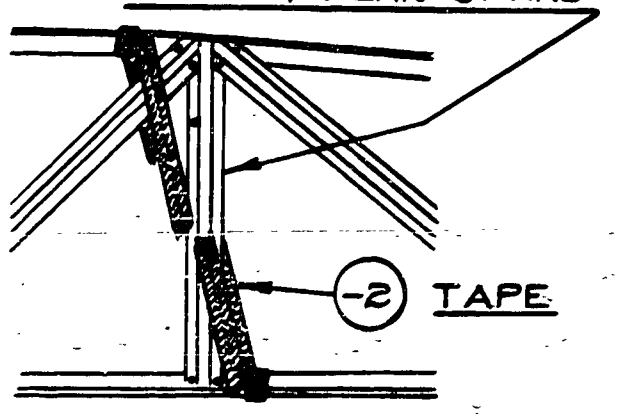

FIG. 1 — TYPICAL CHORDWISE CROSS SECTION

NOTE: ~~PART MARKED △ ALSO ON 90404 & 90406 (MODEL L-14)~~

TO TOP OF WING TIP RIB

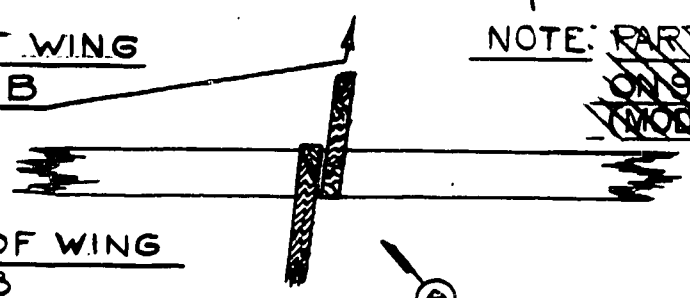

TO BOTTOM OF WING TIP RIB

FIG. 4 METHOD OF WRAPPING TAPE AROUND WING TIP BOW



FIG. 5 — METHOD OF INSTALLING TAPE AT WING TANK BAY (J4 & J5 MODELS ONLY)

LIMITS, SHOP PRACTICES AND FINISH, UNLESS OTHERWISE NOTED, TO BE IN ACCORDANCE WITH PIPER SPECIFICATIONS #9 AND #10.

PART No.	No. REQ.	SIZE	MATERIAL DESCRIPTION
-2	1	3/8 X 480	COTTON HERRINGBONE TAPE

SCALE

TOTAL WT. - LBS.

FINISH

MODEL	PER SHIP	NEXT ASSEMBLY	SUPERSEDES	SUP. BY
J3		13004, 15556		
J5D		14766		
J5C		14766, 13555		
L-14		13004		
TG-8		13004		
J4		10615		
J5		12344		

LET.	REVISION	DATE	BY
D	J5C N.A. 16355 REMOVED	11-29-45	D.A.W.
C	L-14 MODEL REF. ADDED FOR -2	3-17-45	H.M.Z.
B	REDRAWN WITHOUT CHANGE	4-10-44	I.M.
A	J5C NEXT ASSY. 16355 WAS 13555	11-24-43	R.E.T.

PIPER AIRCRAFT CORP.
LOCK HAVEN, PENNA.

TAPE INSTALLATION — WING RIB CENTER

DRAWN	CHECKED	APPROVED
L. McNERNEY 4-10-44	R.E.T. 4-11-44	

12451

123

A 123

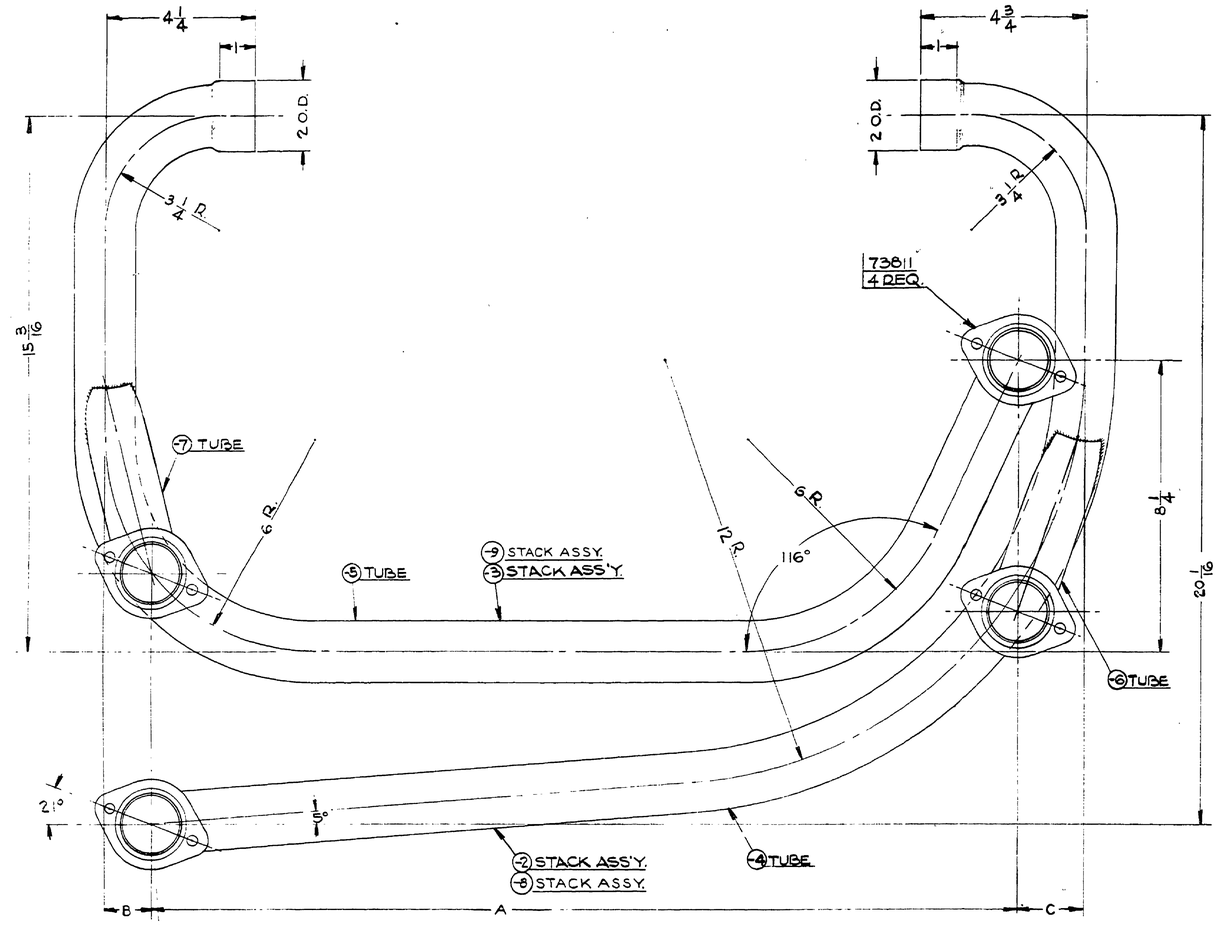

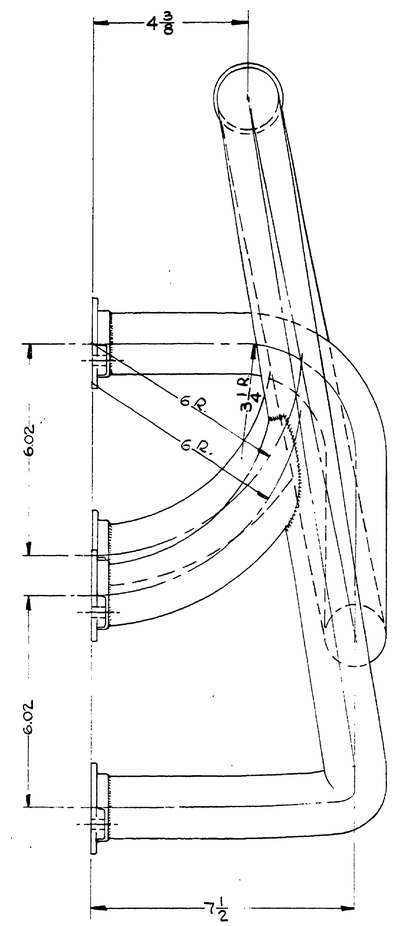



ASSY. NO.	A	B	C
12457-2	24 3/4	1 3/8	1 7/8
12457-3	24 3/4	1 3/8	1 7/8
12457-8	25	1 1/8	1 5/8
12457-9	25	1 1/8	1 5/8

(A)

NOTE:
ALL RADII ARE IN PLANE OF METAL.

PART NO.	NO. REQ.	SIZE	DESCRIPTION / MATERIAL
73811	4		FLANGE
-7	1	1 3/4 x .035 x 10	
-6	1	1 3/4 x .035 x 10	ST. STL. TYPE 347
-5	1	1 3/4 x .035 x 54	ANNEAL. 2D FINISH
-4	1	1 3/4 x .035 x 52	
-9	1	ASSY CONSISTS OF 1 EA. OF -5, -7, & 2 OF 73811	
-3			
-8	1	ASSY. CONSISTS OF 1 EA. OF -4, -6, & 2 OF 73811	
-2			

SCALE 2 IN = 1 FT. TOTAL WT.-LBS.
FINISH-PIPER SPECIFICATION #10
MANUFACTURING PRACTICES-PIPER SPECIFICATION #9

MODEL PER PLANE | NEXT ASSEMBLY | SUPERSEDES | SUP. BY

THIS DRAWING IS THE PROPERTY OF THE PIPER AIRCRAFT CORP., AND ITS POSSESSION BY UNAUTHORIZED PERSONS SHALL NOT BE CONSTRUED AS PERMISSION TO REPRODUCE FOR SALE, IN WHOLE OR IN PART, ANY DEVICES SHOWN THEREON.

LET.	REVISION	DATE	BY
A	-8, -9 & TABLE ADDED	8-15-50	C.K.

PIPER AIRCRAFT CORP.
LOCK HAVEN, PENNA.

STACK ASSEMBLIES-
EXHAUST

DRAFTSMAN	CHECKER	STANDARDS
6-22-49	H.R.K. 6-23-49	

12457

Philadelphia Blue Print Co. 150 8-1-46

A

862

A862

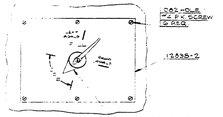

FIG 5
FUEL VALVE PLATE INST
SPN 11ET

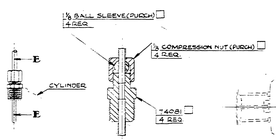

FIG 4
PRIMER LINE ATTACHMENT TO CYLINDER
FULL SIZE

SECTION **E-E**
TWICE SIZE

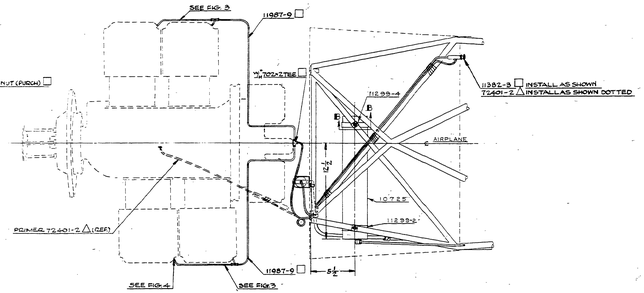

VIEW **D-D**

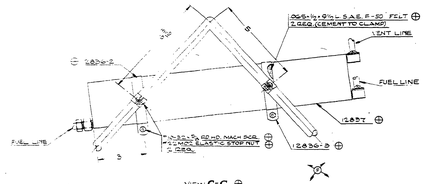

VIEW **C-C**

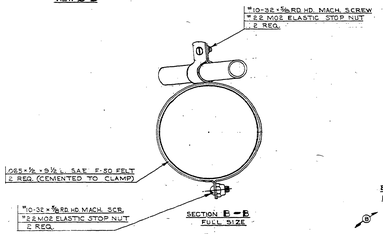

SECTION **B-B**
FULL SIZE

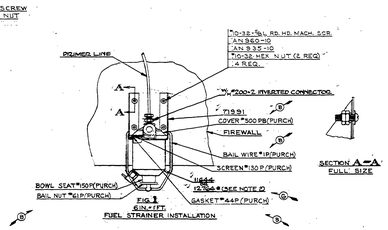

FIG 1
6IN-11FT
FUEL STRAINER INSTALLATION

SECTION **A-A**
FULL SIZE

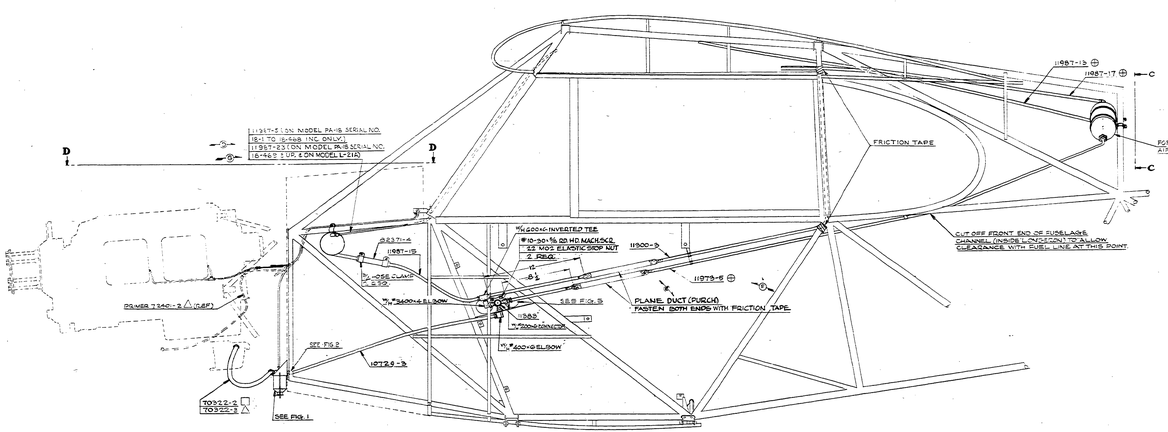

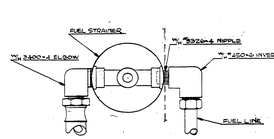

FIG 2
FUEL LINE TO STRAINER ATTACHMENT
FULL SIZE

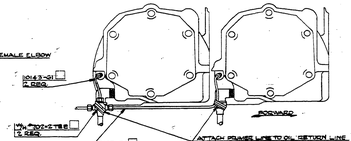

FIG 3
PRIMER LINE ATTACHMENT AT CYLINDER
RIGHT SIDE OF ENGINE SHOWN
6IN-11FT

NOTE:
1. TAPE FUEL LINES WITH FRICTION TAPE AT ALL POINTS WHERE CONTACTING METAL.
2. BOWL 13764 IS STANDARD ON MODEL L-21A AND OPTIONAL ON ALL OTHER MODELS.

△ USED ON MODELS PA18 & L21A WITH LYCOMING O-320-A1A, B2C, D1A ENGINE ONLY.
● USED ON MODEL PA-18 WITH CONTINENTAL C-90-8F & C90-12 ENGINES ONLY.
⊕ OPTIONAL EQUIPMENT.
USED ON PA18 COMPLETE AIRPLANE 18554 ONLY & MODEL L-21A

10-32	⅝	8	P.H. MACH. SCR.
13.99	1		HEADER TANK INST. (A PRECOMPLETE HOME BUILT)
	1	¾ x ¾	FLANT DUCT PER SPEC PURCH. GRAYDAD 7
	1		GOVER *500PB
	1		GASKET *44P
	1		SCREEN *150P
	1		BOWL STAT *150P
	1		BAIL NUT *61P
	1		BAIL WIRE *IB
	2	2-1-1	SAE F-20 FELT
	2	.062-1-1/16	S.A.E. F-20 FELT
	1	.5	FRICTION TAPE
	1		GLYPTAL
11987-17	1		(PRIMER)
	1		SEE DRAWING
	1		¼ NPSF TEE
	1		¼ NPSF HEADER TANK
	1		¼ NPSF
	1		¼ NPSF ELASTIC STOP NUT
	1		*¼ 3600-6 ELBOW
	1		¼ NPSF
12457			LEFT / WING CONTROL
	2		¼ 3600-6 ELBOW
	1		¼ 3600-6 NIPPLE
	3		¼ 7202-6 TEE
	1		¼ NPSF TEE
	1		¼ 3600-6 ELBOW
	1		¼ 7200-6 ELBOW
	1		¼ NPSF CONNECTOR
AN960-10	4		WASHER
AN970-4	4		WASHER
11987-1	1		VALVE ASS'Y
3257	1		VALVE ASS'Y
8097-4	1		HOSE
7408-1	4		CLAMP
7240I-2	1		PRIMER ASS'Y
11091	1		BRACKET ASS'Y
70322-2 △	1		FUEL LINE ASS'Y
70322-2 △	1		FUEL LINE ASS'Y
11987-13	1		(REAR)
11987-13	1		(REAR)
11987-9	2		(REAR)
11987-5	1		(REAR)
13-3	1		FUEL LINE ASS'Y
12436-2	1		FUEL VALVE ASS'Y
3257	1		HEADER TANK ASS'Y
12436-3	1		CLAMP ASS'Y
12436-2	1		
13564			DOWL (SEE NOTE 2)
11644			
11987-3	1		PRIMER ASS'Y
11300-3	1		FUEL LINE ASS'Y
11299-4	1		CLAMP ASS'Y
11299-5	2		
10729-3 △	1		FUEL LINE ASS'Y
10729	1		HEADER TANK ASS'Y
10483-01	2		TUBE ASS'Y
10483-02	2		
PART NO.	QTY.	SIZE	DESCRIPTION

CHANGE OF MODEL DESIGNATION OR NAME			
CHANGE OF TYPE CERTIFICATE			
CHANGE OF CERTIFICATE HOLDER			
CHANGE OF MODEL AND SERIAL NUMBER			
REVISION			

PIPER AIRCRAFT CORP.
LOCK HAVEN, PENNA.

SYSTEM INSTALLATION

12458

B7

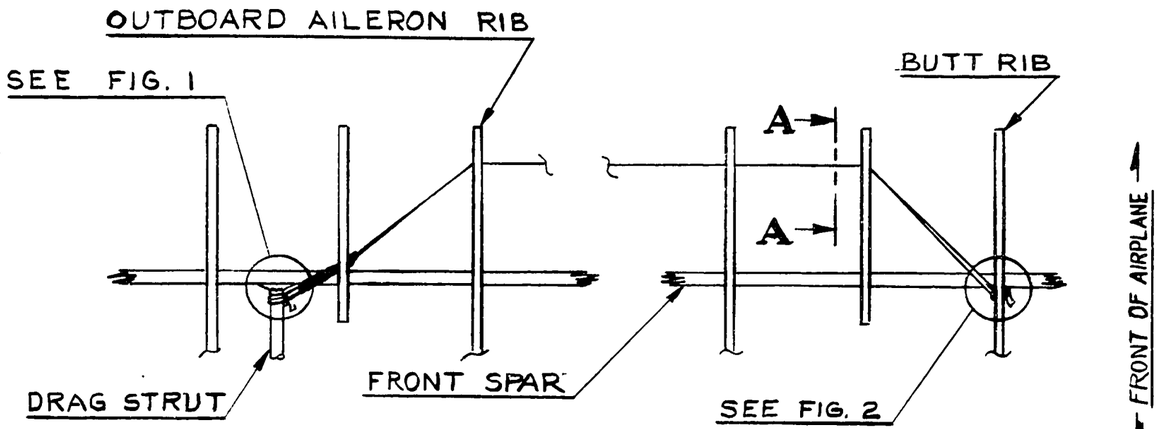

TOP VIEW OF WING PANEL

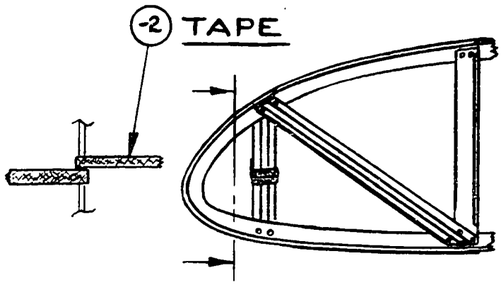

SECTION A-A
TYPICAL CROSS SECTION

-2 TAPE TO BE WRAPPED WITH FRICTION TAPE WHERE IT CROSSES SPAR AND EXTENDING BEYOND WING TIP NOSE RIB

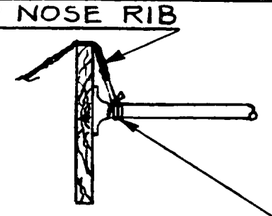

TAPE TO BE WRAPPED AROUND DRAG STRUT TWO TIMES AND TIED SECURELY

FIG. 1

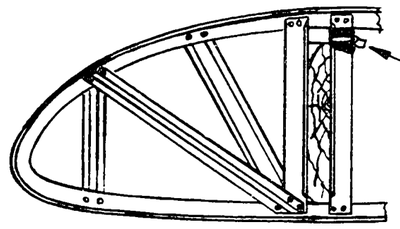

WRAP ANGLE BRACE WITH FRICTION TAPE AS SHOWN THEN WRAP -2 TAPE OVER FRICTION TAPE TWO TIMES AND TIE SECURELY

FIG. 2

NOTE: PART MARKED THUS △ ALSO USED ON 14351 (MOD. J3)

PART No.	No. REQ.	SIZE	DESCRIPTION / MATERIAL
	2	3/4 X 6 LONG	FRICTION TAPE
-2	1	9/16 X 228 LONG	COTTON HERRINGBONE TAPE

SCALE — TOTAL WT.—LBS.

FINISH—PIPER SPECIFICATION #10

MANUFACTURING PRACTICES—PIPER SPECIFICATION #9

TAPE INSTALLATION — WING RIB NOSE

LET.	REVISION	DATE	BY
C	REDRAWN & REVISED	5-23-45	J.B.M.

MODEL	PER PLANE	NEXT ASSEMBLY	SUPERSEDES	SUP. BY
J-4A	2	13004		
J3	2	13004		

PIPER AIRCRAFT CORP.
LOCK HAVEN, PENNA.

DRAFTSMAN	CHECKER	STANDARDS
J. B. M. 5-23-45	R. E. T. 5-24-45	

12461

521

A 521

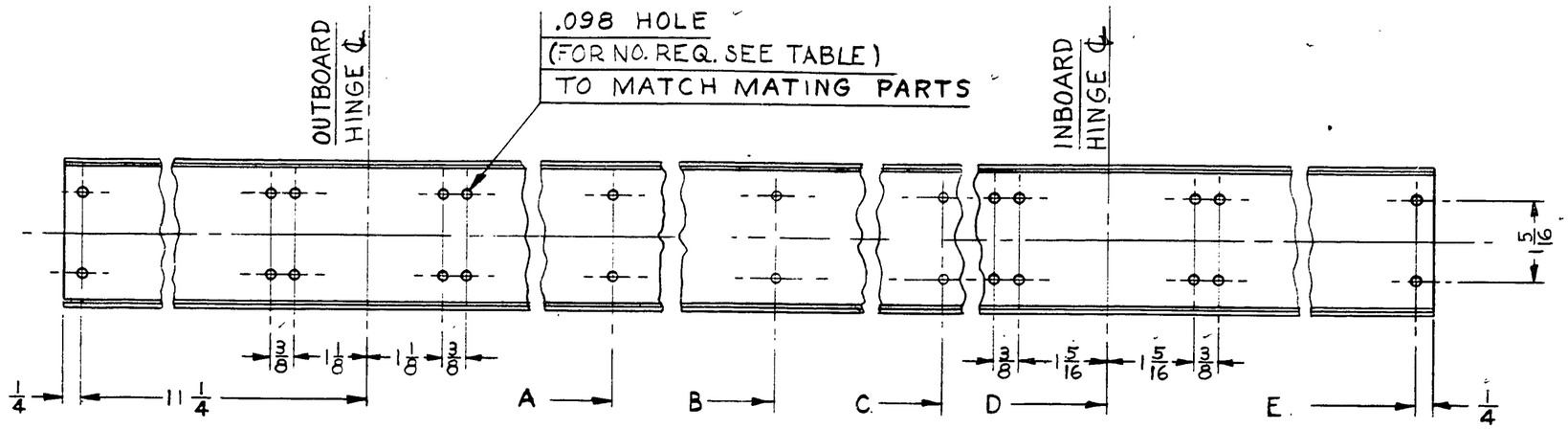

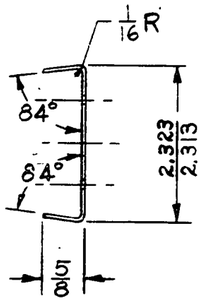

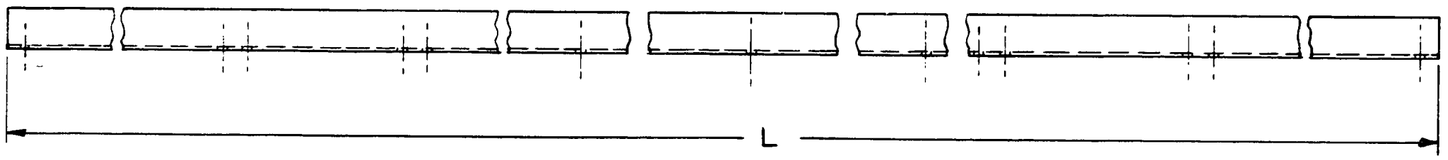

SPAR NO.	A	B	C	D	E	L	NO. HOLES REQ.
12478	22 7/16	33 3/8	–	44 3/4	51 1/2	52	24
12478-2	22 1/4	33 1/4	44 1/4	55 1/4	62	62 1/2	26

(A)

LET.	REVISION	DATE	BY
A	-2 & TABLE ADDED	12-23-49	K.D.

MODEL	PER PLANE	NEXT ASSEMBLY	SUPERSEDES	SUP. BY

THIS DRAWING IS THE PROPERTY OF THE PIPER AIRCRAFT CORP. AND ITS POSSESSION BY UNAUTHORIZED PERSONS SHALL NOT BE CONSTRUED AS PERMISSION TO REPRODUCE FOR SALE, IN WHOLE OR IN PART. ANY DEVICES SHOWN THEREON.

PIPER AIRCRAFT CORP.
LOCK HAVEN, PENNA.

PART NO.	No. REQ.	SIZE	MATERIAL
			3S-O ALUM.
		.032 × 3 1/2 × NOTED	3S-1/2 H. OR ALUM.

SCALE 6 IN. = 1 FT. — TOTAL WT.—LBS.

FINISH—PIPER SPECIFICATION #10

MANUFACTURING PRACTICES—PIPER SPECIFICATION #9

SPAR — FLAP

DRAFTSMAN	CHECKER	STANDARDS
C. E. K. 6-30-49	H. R. K. 6-30-49	

12478

522

A 522

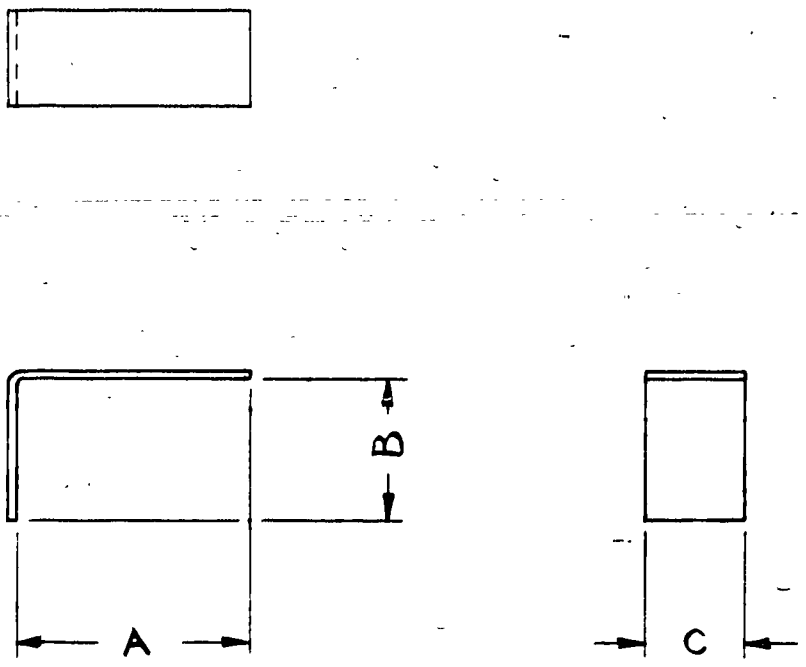

GUARD NO.	A	B	C
12499	1 3/16	3/4	1/2
12499-2	1	7/16	7/16

(A)

WAS 1104 / D1088-A, 1103 / D1069-A, A189 / D1125-A

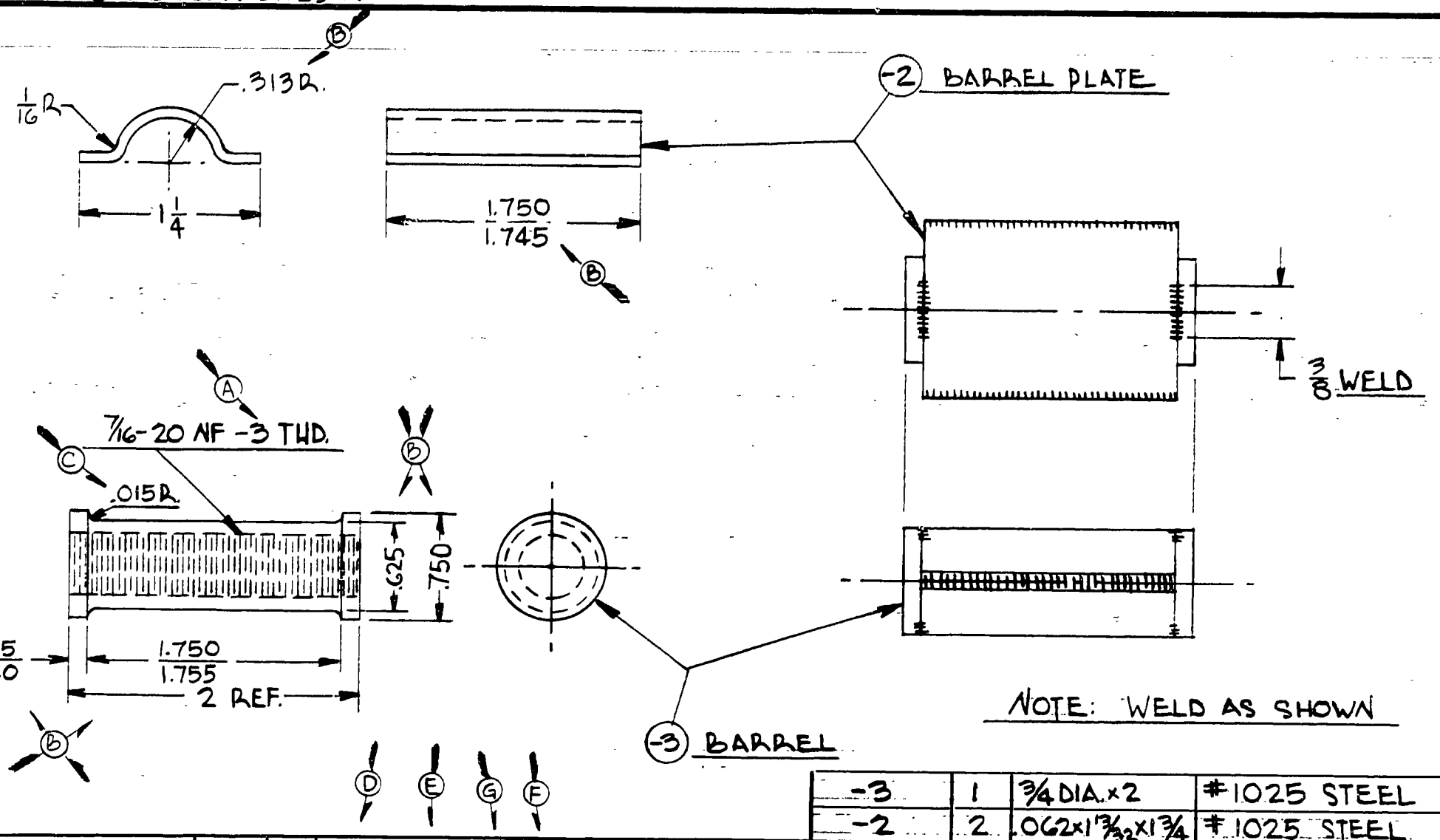

NOTE: WELD AS SHOWN

PART NO.	NO. REQ.	SIZE	DESCRIPTION
		MATERIAL	
-3	1	3/4 DIA. x 2	#1025 STEEL
-2	2	.062 x 1 3/32 x 1 3/4	#1025 STEEL

SCALE FULL SIZE | TOTAL WT.—LBS.

FINISH—PIPER SPECIFICATION # 10

MANUFACTURING PRACTICES—PIPER SPECIFICATION # 9

BARREL ASSEMBLY— LIFT STRUT

LET	REVISION	DATE	BY
H	REDRAWN WITHOUT CHANGE	6-12-51	M.G.
G	J5C NA. 10096, 10098 WAS 12542, 11341	10-1-45	LEK
F	L-14 NA. 11341, 12542 WAS 90138	6-14-45	I.D.B.
E	4 PER SHIP WAS 2 FOR L-14	6-14-45	I.D.B.
D	L-14 MODEL REF. ADDED	5-17-45	H.M.Z.
C	.015 R. ADDED	12-6-43	T.M.M.
B	DIM'S. REV. 1.759/1.755 DIM. ADDED	9-3-43	CEK
A	NF-3 WAS SAE	2-26-43	CEK

MODEL	PER PLANE	NEXT ASSEMBLY	SUPERSEDES	SUP. BY
J5C	4	10096, 10098		
L-14	4	12542, 11341		
HE-1	4	12542, 11341		
J5D	4	12542, 11341		
J5	4	12542, 11341		

THIS DRAWING IS THE PROPERTY OF THE PIPER AIRCRAFT CORP. AND ITS POSSESSION BY UNAUTHORIZED PERSONS SHALL NOT BE CONSTRUED AS PERMISSION TO REPRODUCE FOR SALE IN WHOLE OR IN PART ANY DEVICES SHOWN THEREON.

PIPER AIRCRAFT CORP.
LOCK HAVEN, PENNA.

DRAFTSMAN	CHECKER	STANDARDS
W.N. EMERY 9-29-41	R.C.M. 10-9-41	

12521

125

A125

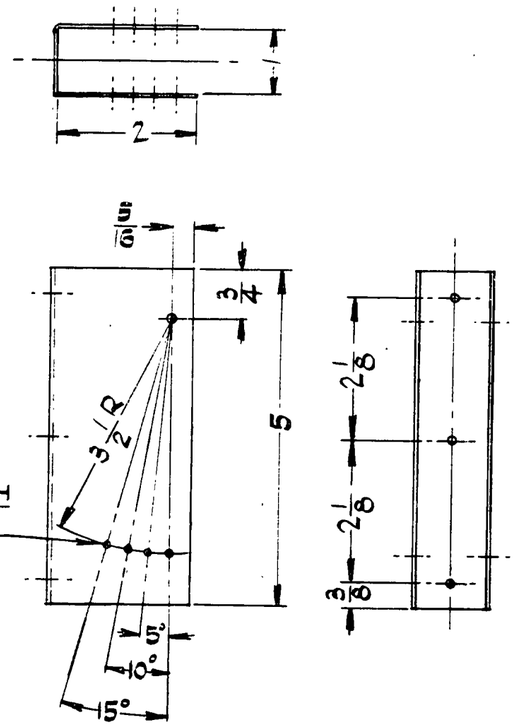

12524-2

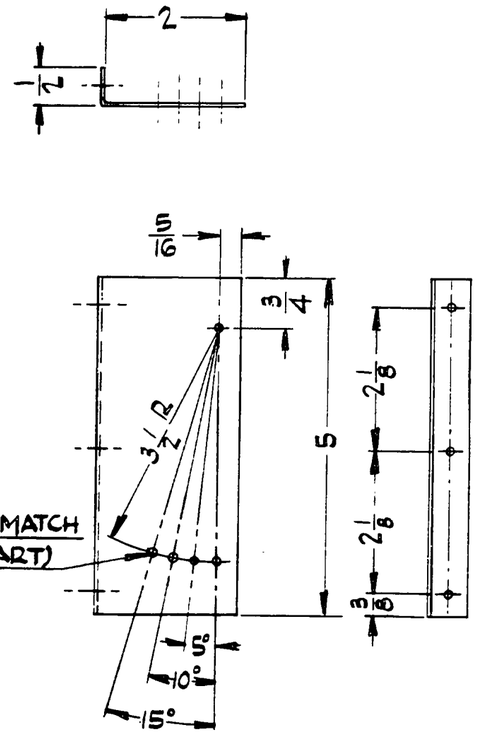

12524-4 L.H. SHOWN
12524-3 R.H. OPPOSITE

PART NO.	No. REQ.	SIZE	MATERIAL
-4		.032×2½×5	52S ½H ALUM.
-3		.032×2½×5	52S ½H ALUM.
-2		.032×5×5	52S ½H ALUM.

SCALE 6 IN. = 1 FT. | TOTAL WT.—LBS.

FINISH—PIPER SPECIFICATION #10

MANUFACTURING PRACTICES—PIPER SPECIFICATION #9

BRACKET—LANDING LIGHT MOUNTING

LET.	REVISION	DATE	BY

MODEL	PER PLANE	NEXT ASSEMBLY	SUPERSEDES	SUP. BY

THIS DRAWING IS THE PROPERTY OF THE PIPER AIRCRAFT CORP. AND ITS POSSESSION BY UNAUTHORIZED PERSONS SHALL NOT BE CONSTRUED AS PERMISSION TO REPRODUCE FOR SALE, IN WHOLE OR IN PART, ANY DEVICES SHOWN THEREON.

PIPER AIRCRAFT CORP.
LOCK HAVEN, PENNA.

DRAFTSMAN	CHECKER	STANDARDS	
RE 7/18/49	H.R.K. 7-22-49		12524

523

A 523

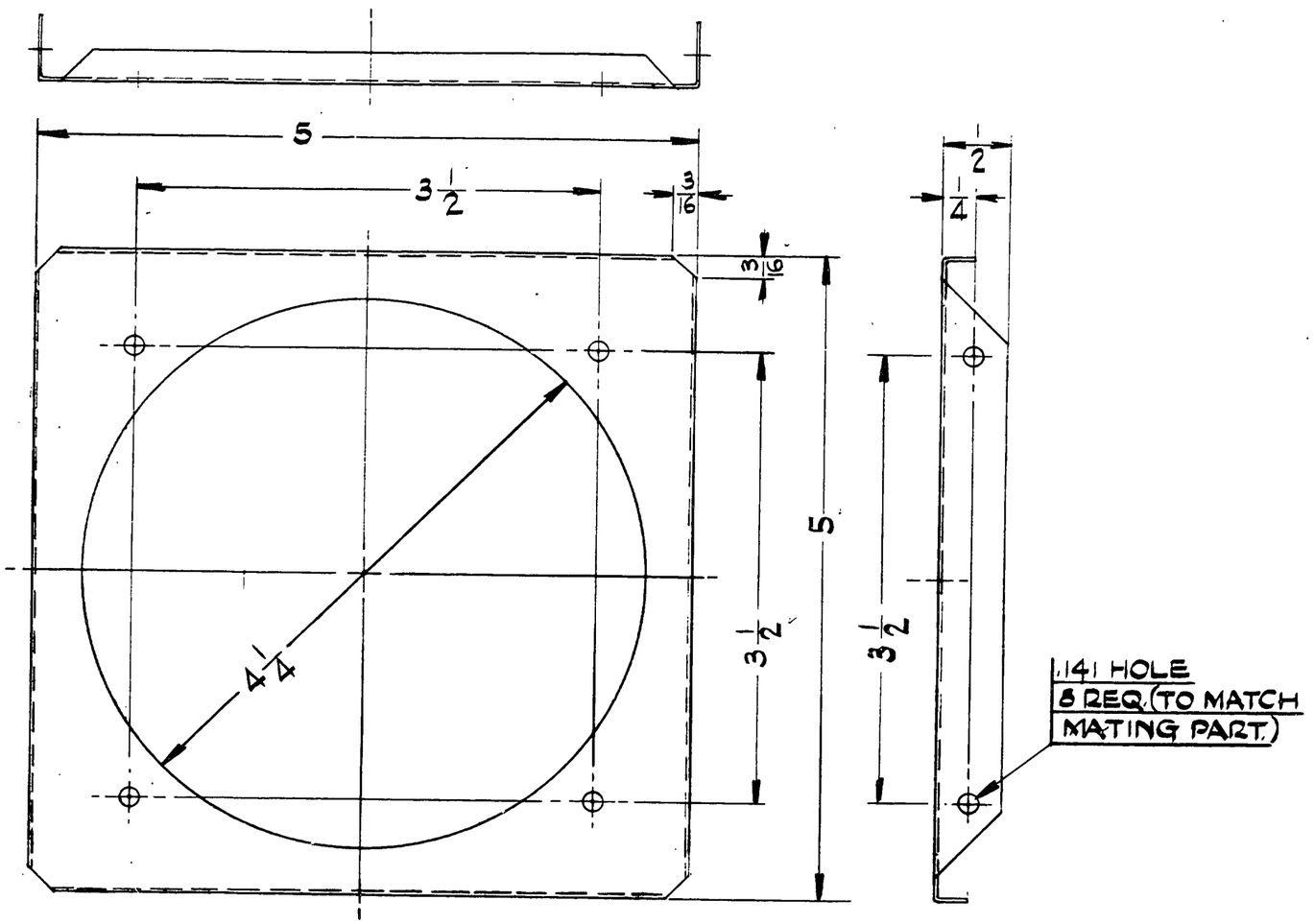
5
3 1/2
3/16
3/16
5
4 1/4
3 1/2
1/2
2
1/4
3 1/2
1/2
.141 HOLE
8 REQ. (TO MATCH
MATING PART.)

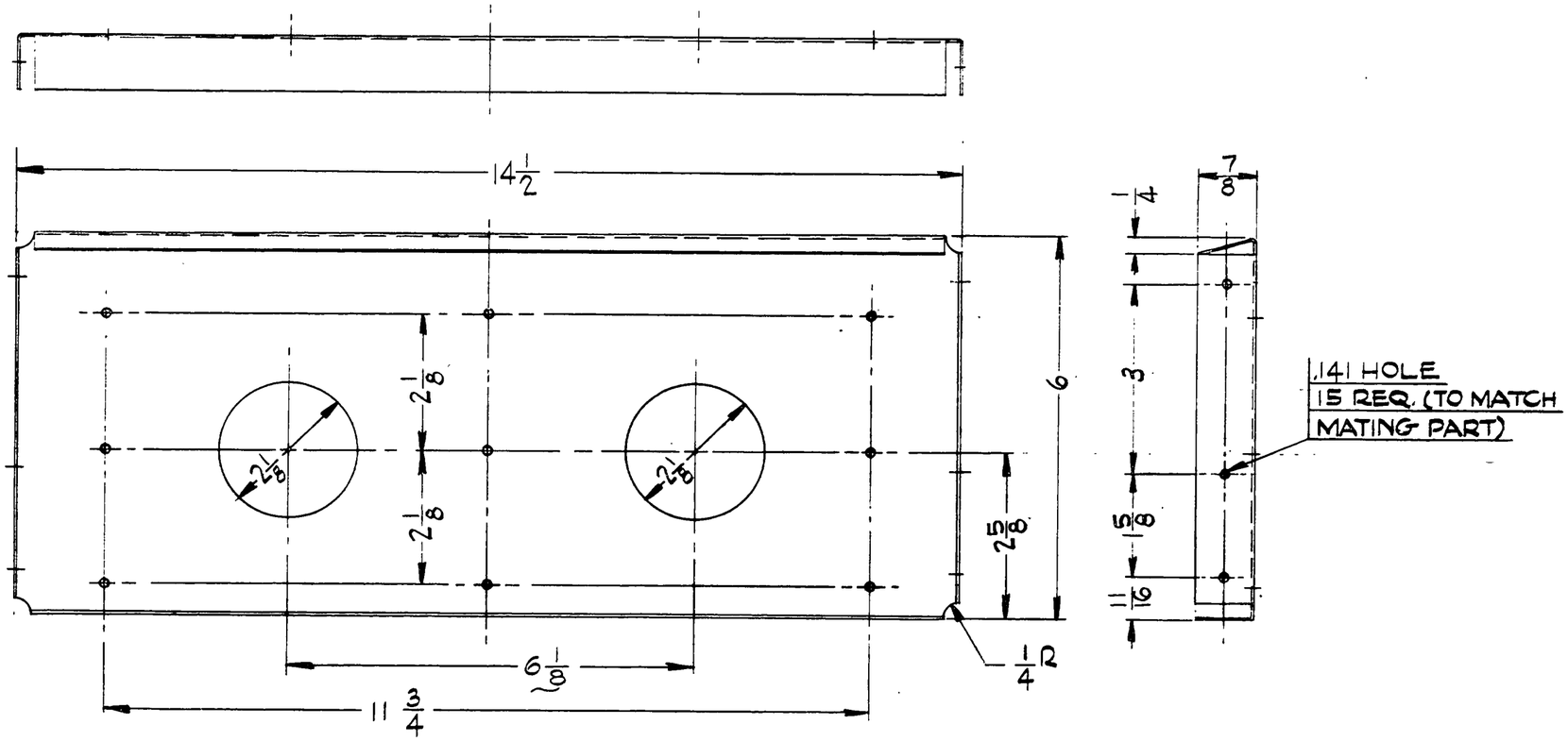
14 1/2
2 1/8
2 1/8
2 1/8
2 1/8
6
2 5/8
6 1/8
11 3/4
1/4 R
1/4
7/8
3
5/8
11/16
.141 HOLE
15 REQ. (TO MATCH
MATING PART)

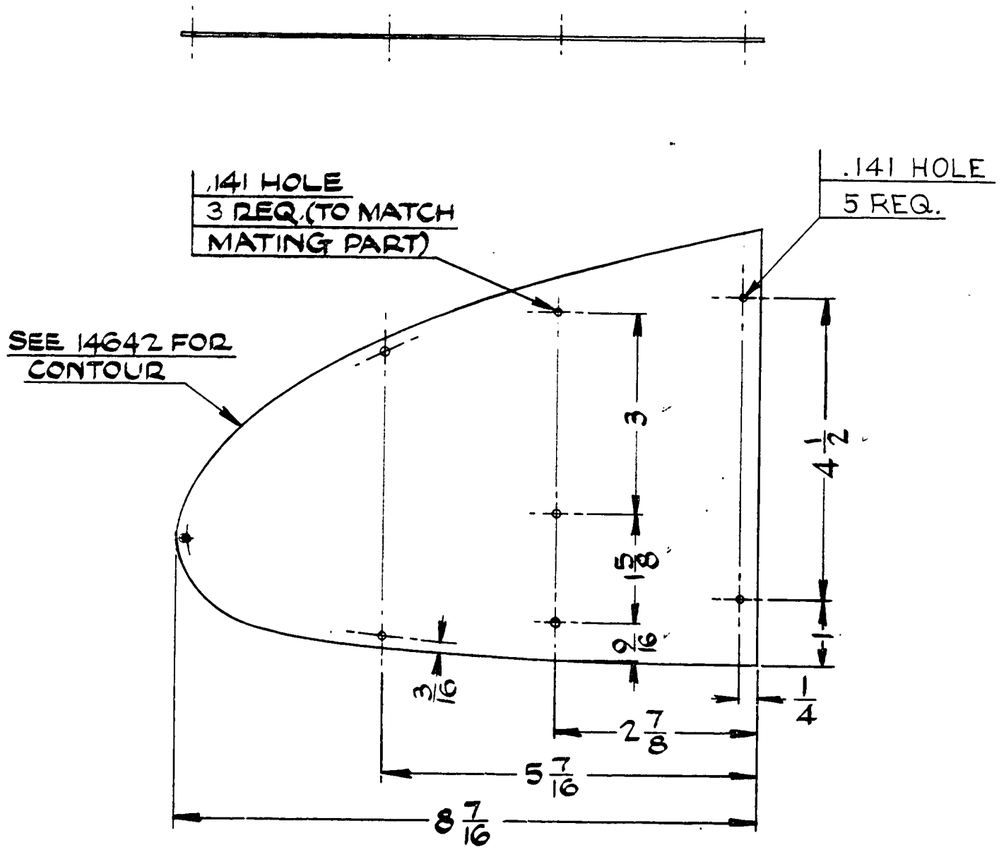

12529-2

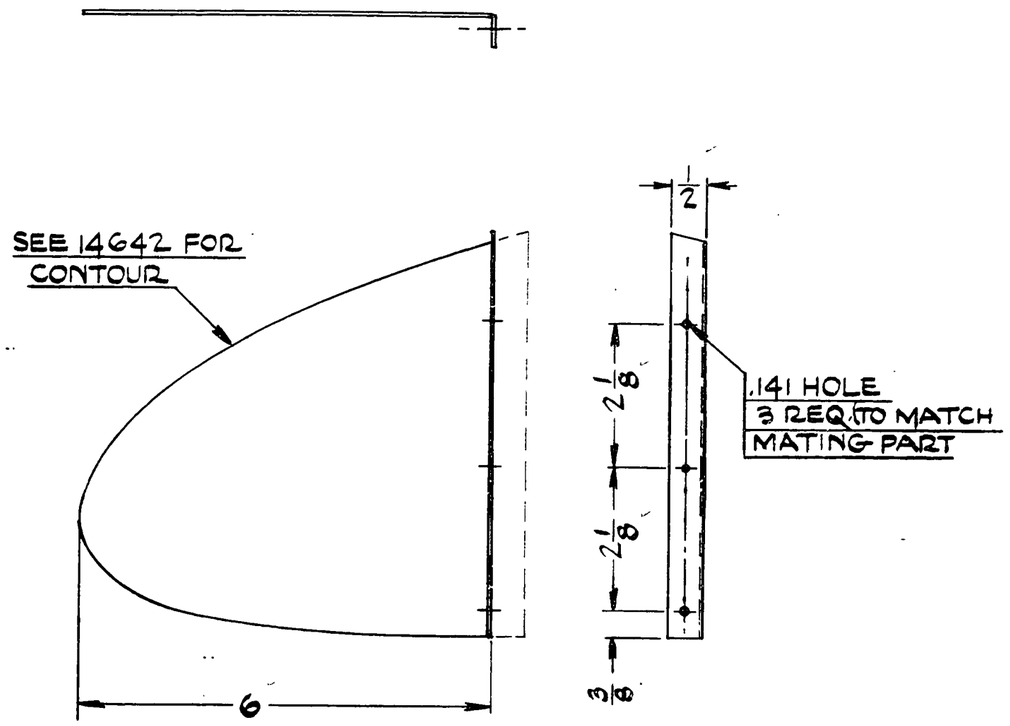

12529-3

14642	REF.	NOSE PLATE OUTLINE
-3	X	.032×6×6 1/2 — 52S 1/2H ALUM.
-2	X	.032×6 1/2×8 7/16 — 52S 1/2H ALUM.
PART No.	No. REQ.	SIZE / DESCRIPTION
		MATERIAL

SCALE 6IN=1FT — TOTAL WT.—LBS.

FINISH—PIPER SPECIFICATION #10

MANUFACTURING PRACTICES—PIPER SPECIFICATION #9

PLATE-RIB REINFORCEMENT

LET.	REVISION	DATE	BY

MODEL	PER PLANE	NEXT ASSEMBLY	SUPERSEDES	SUP. BY

THIS DRAWING IS THE PROPERTY OF THE PIPER AIRCRAFT CORP. AND ITS POSSESSION BY UNAUTHORIZED PERSONS SHALL NOT BE CONSTRUED AS PERMISSION TO REPRODUCE FOR SALE, IN WHOLE OR IN PART, ANY DEVICES SHOWN THEREON.

PIPER AIRCRAFT CORP.
LOCK HAVEN, PENNA.

DRAFTSMAN	CHECKER	STANDARDS
RC 7/20/49	K.R.K. 7-22-49	

12529

526

A526

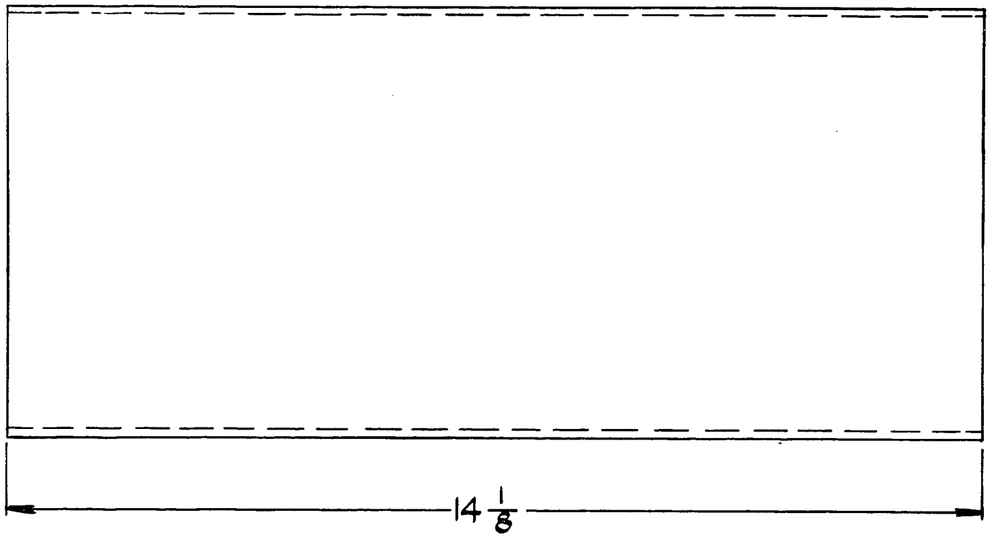

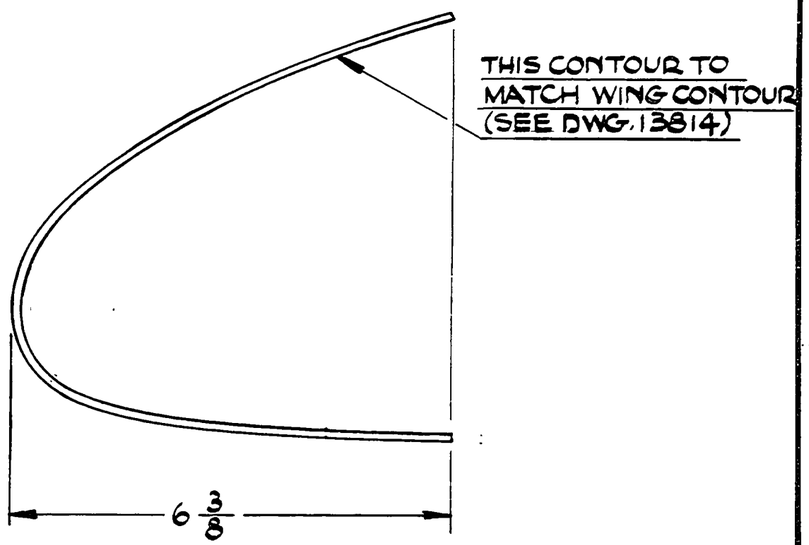

LET.	REVISION	DATE	BY	MODEL	PER PLANE	NEXT ASSEMBLY	SUPERSEDES	SUP. BY	

THIS DRAWING IS THE PROPERTY OF THE PIPER AIRCRAFT CORP. AND ITS POSSESSION BY UNAUTHORIZED PERSONS SHALL NOT BE CONSTRUED AS PERMISSION TO REPRODUCE FOR SALE, IN WHOLE OR IN PART, ANY DEVICES SHOWN THEREON.

PIPER AIRCRAFT CORP.
LOCK HAVEN, PENNA.

13814	REF.	RIB OUTLINE	
		.080×14 1/8×15 SIZE	PLEXIGLAS DESCRIPTION
PART No.	No. REQ.	MATERIAL	
SCALE 6 IN. = 1 FT.		TOTAL WT.—LBS.	
FINISH—PIPER SPECIFICATION #10			
MANUFACTURING PRACTICES—PIPER SPECIFICATION #9			

WINDOW-LANDING LIGHT

DRAFTSMAN	CHECKER	STANDARDS	
RE 7/20/49	H.R.K. 7-22-49		12532

527

A527

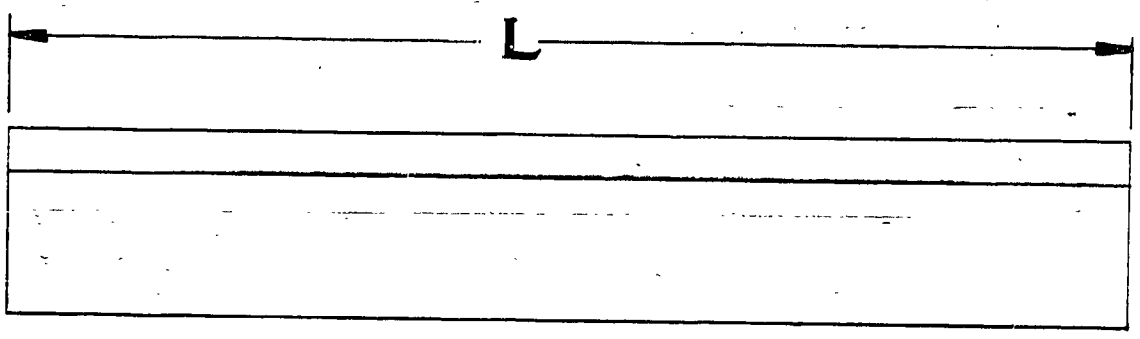

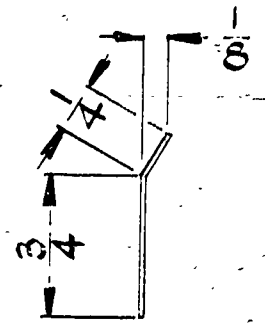

PART NO.	L
12533-2	14 1/8
12533-3	15 1/4

PART No.	No. REQ.	.032 x 1 x NOTED SIZE	35 1/2 H ALUM DESCRIPTION
		MATERIAL	
SCALE FULL SIZE		TOTAL WT.—LBS.	
FINISH—PIPER SPECIFICATION #10			
MANUFACTURING PRACTICES—PIPER SPECIFICATION #9			

LET.	REVISION	DATE	BY

MODEL	PER PLANE	NEXT ASSEMBLY	SUPERSEDES	SUP. BY

THIS DRAWING IS THE PROPERTY OF THE PIPER AIRCRAFT CORP. AND ITS POSSESSION BY UNAUTHORIZED PERSONS SHALL NOT BE CONSTRUED AS PERMISSION TO REPRODUCE FOR SALE, IN WHOLE OR IN PART. ANY DEVICES SHOWN THEREON.

PIPER AIRCRAFT CORP.
LOCK HAVEN, PENNA.

STRIP - LANDING LIGHT WINDOW ATTACHMENT

DRAFTSMAN	CHECKER	STANDARDS	12533
RC 7/21/49	H.R.K. 7-21-49		

126

A126

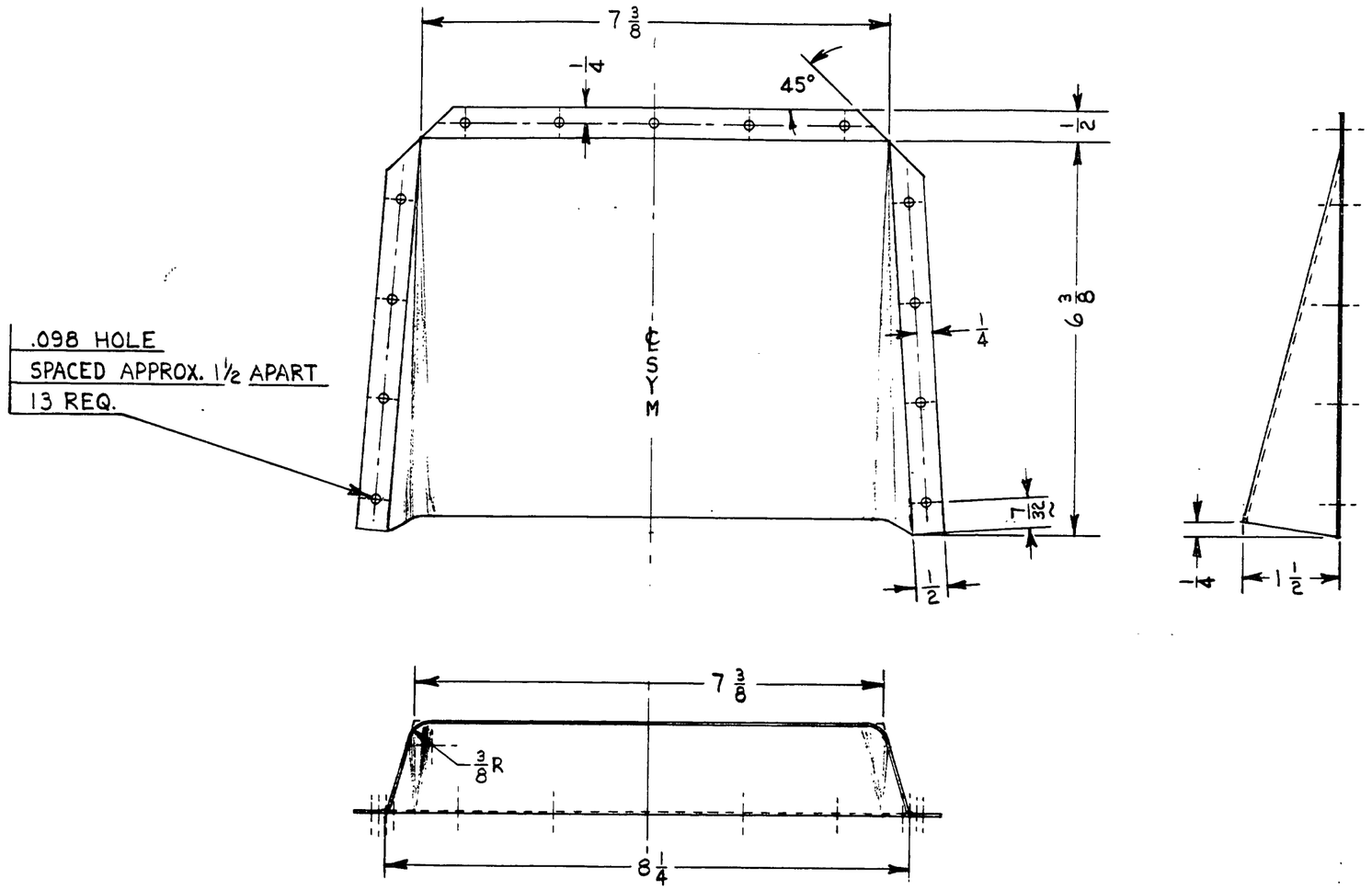
7 3/8
1/4
45°
1/2
6 3/8
1/4
7/32
1/2
.098 HOLE
SPACED APPROX. 1½ APART
13 REQ.
℄ SYM
7 3/8
3/8 R
8 1/4

1/4
1 1/2

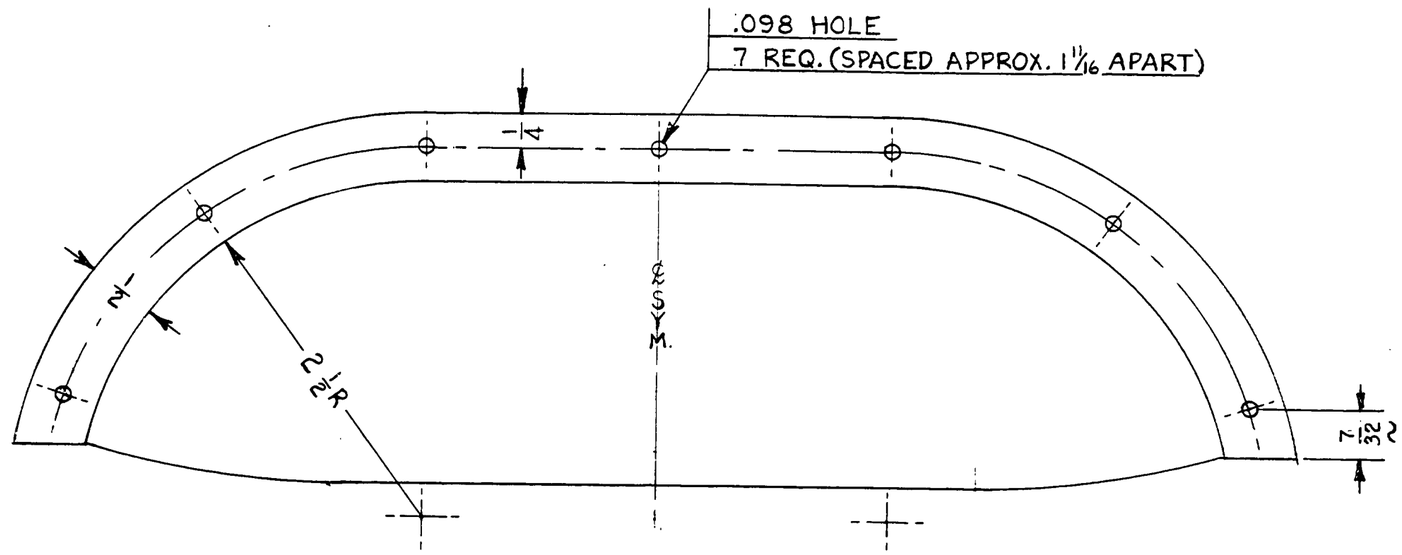

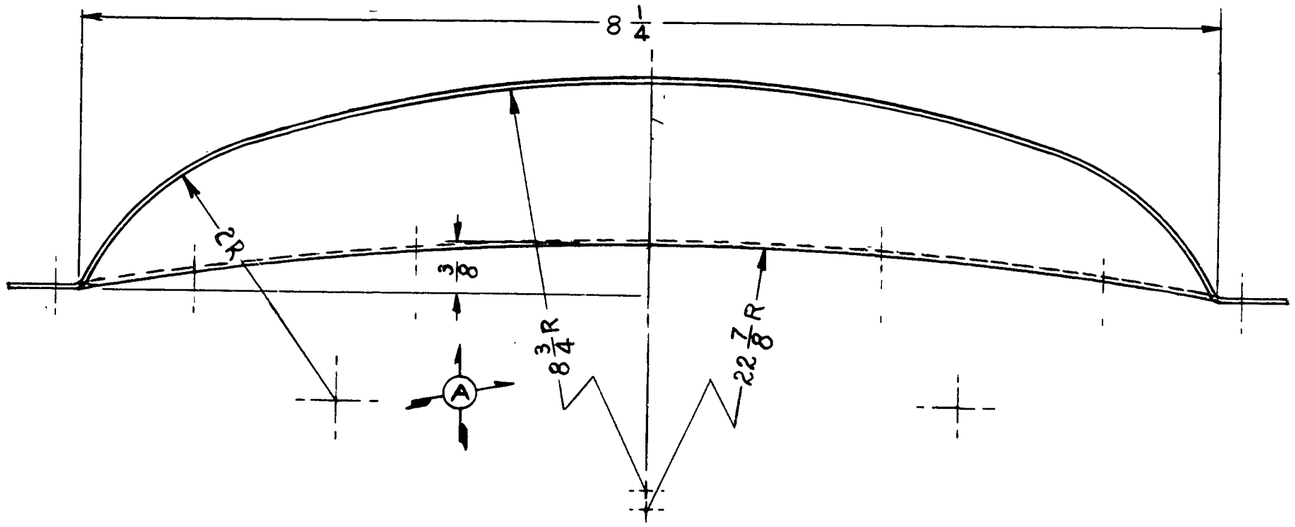

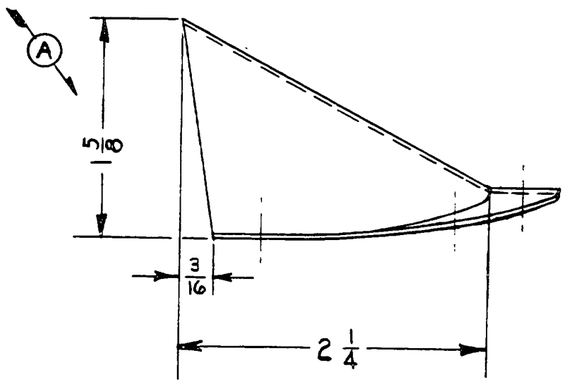

LET.	REVISION	DATE	BY
A	1 5/8 WAS 1 1/4; 3/8 & 3/4 R 22 3/8 R ADDED	4-11-50	C.K.

MODEL | PER PLANE | NEXT ASSEMBLY | SUPERSEDES | SUP. BY

THIS DRAWING IS THE PROPERTY OF THE PIPER AIRCRAFT CORP. AND ITS POSSESSION BY UNAUTHORIZED PERSONS SHALL NOT BE CONSTRUED AS PERMISSION TO REPRODUCE FOR SALE, IN WHOLE OR IN PART. ANY DEVICES SHOWN THEREON.

PIPER AIRCRAFT CORP.
LOCK HAVEN, PENNA.

PART No.	No. REQ.	SIZE	MATERIAL
		.032 x 3 x 10 3/4	3S-0 ALUM.

SCALE FULL SIZE | TOTAL WT.—LBS.

FINISH—PIPER SPECIFICATION #10

MANUFACTURING PRACTICES—PIPER SPECIFICATION #9

FLANGE - ENGINE COWL AIR VENT

DRAFTSMAN	CHECKER	STANDARDS
R. REEDER 7-26-49	H. R. K. 7-26-49	

12541

529

A529

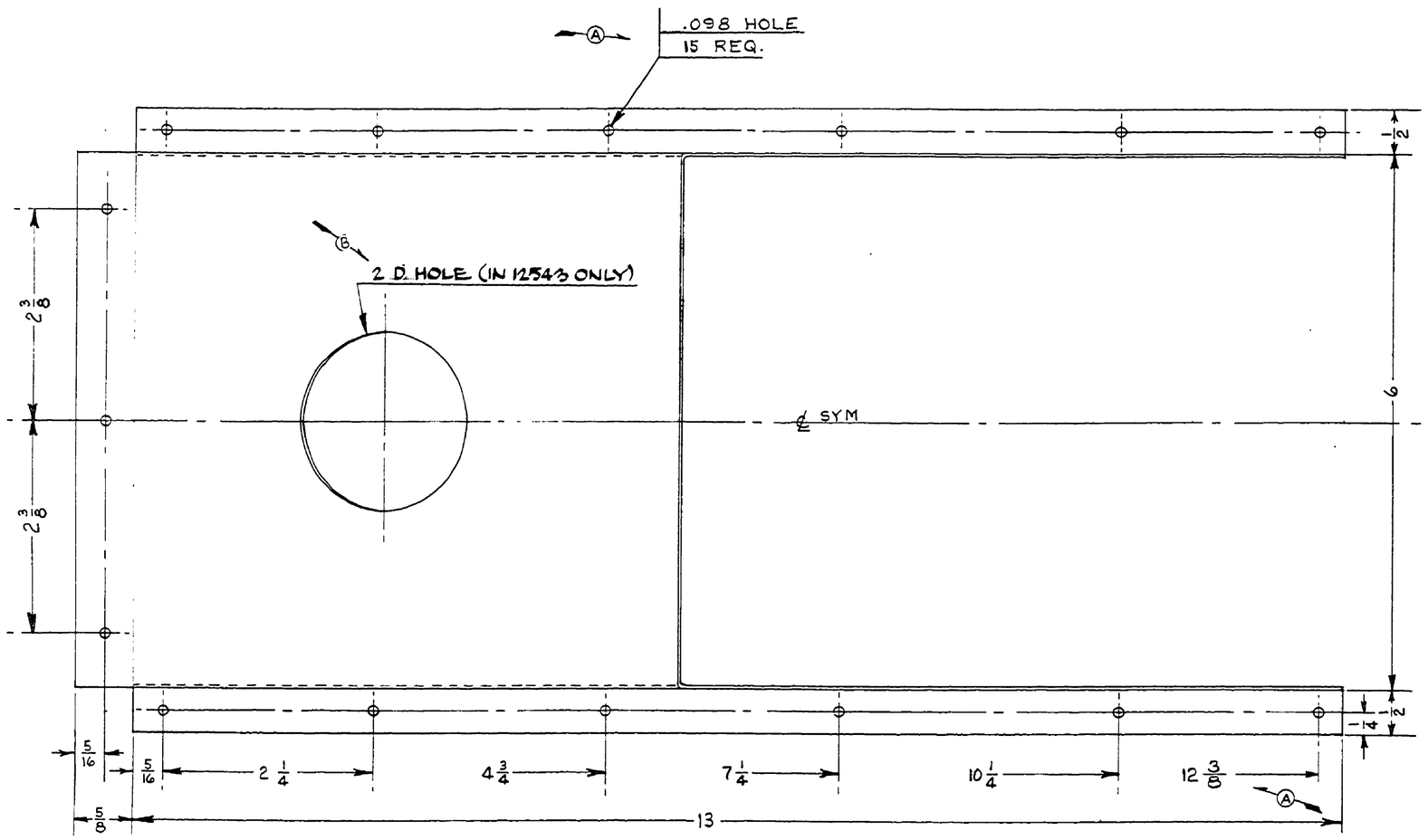

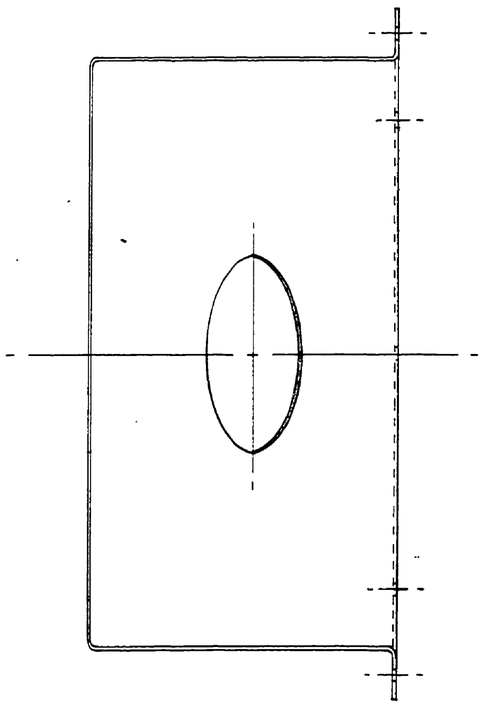

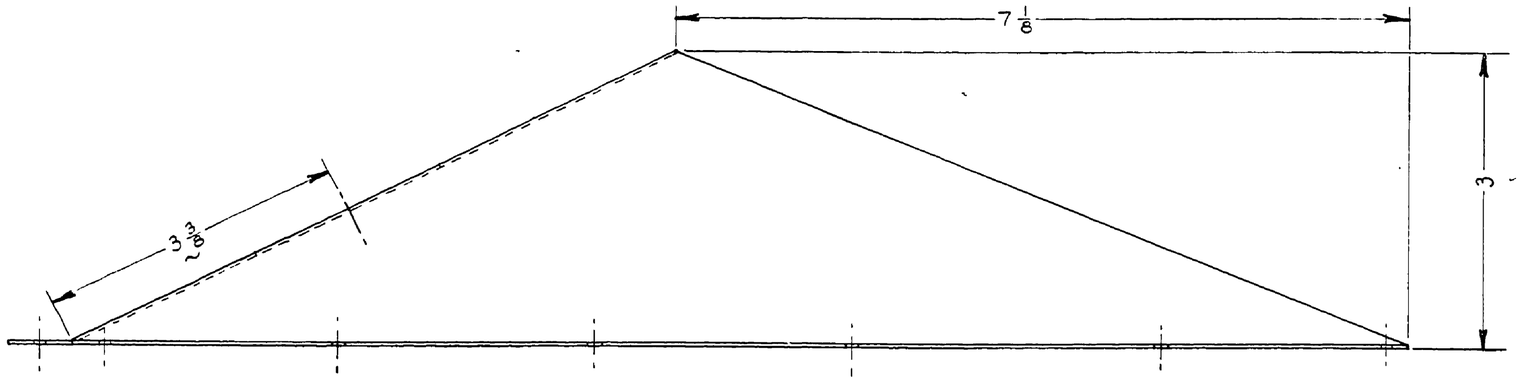

12543 SHOWN
12543-2 SHOWN & NOTED

THIS DRAWING IS THE PROPERTY OF THE PIPER AIRCRAFT CORP. AND ITS POSSESSION BY UNAUTHORIZED PERSONS SHALL NOT BE CONSTRUED AS PERMISSION TO REPRODUCE FOR SALE, IN WHOLE OR IN PART, ANY DEVICES SHOWN THEREON

LET.	REVISION	DATE	BY
B	-2 ADDED	1-4-51	MA
A	12⅜ ADDED; 15 REQ. WAS 13	5-5-50	MRK

MODEL	PER PLANE	NEXT ASSEMBLY	SUPERSEDES	SUP. BY

PIPER AIRCRAFT CORP.
LOCK HAVEN, PENNA.

PART NO.	NO. REQ.	SIZE	DESCRIPTION
		.032×12⅛×21½	3S-½ H.ALUM.
		MATERIAL	

SCALE FULL SIZE — TOTAL WT.—LBS.
FINISH—PIPER SPECIFICATION #10
MANUFACTURING PRACTICES—PIPER SPECIFICATION #9

SCOOP- ENGINE COWL AIR

DRAFTSMAN	CHECKER	STANDARDS
R. REEDER 7-27-45	H. R. K. 7-27-45	

12543

A757

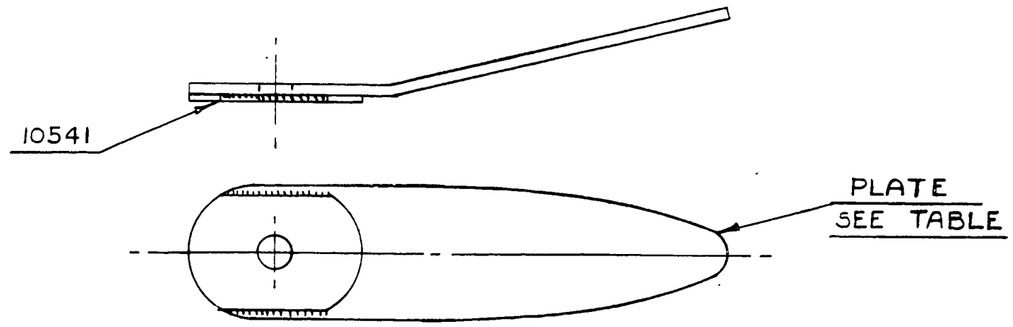

ASSY. NO.	PLATE	PER PLANE	MODEL	NEXT ASSEMBLY	SUP. BY
12551-2	11441-3	2	J4,J5,J5D,HE-1	12542, 11483	
		2	L-14	12542	
		2	J5C	12542	12551-6
12551-3	11461-2	2	J4	11483	
12551-4	11441-2	2	J3,L4A,L4B,T6B	13233, 12363	
12551-5	11461-3	2	J3,J5,J5B,HE-1 L-4A, L4B, T6B	12542, 12363, 13233	
		2	L-14	12542	
		2	J5C	12542	12551-7
12551-6	11441-4	2	J5C	10098	
12551-7	10100	2	J5C	10098	
12551-8	10100-2				
12551-9	11441-5				
12551-10	11441-6				
12551-11	10100-3				
12551-12	11441-8				

LET.	REVISION	DATE	BY
H	-12 ADDED	3-30-48	RC
G	-10 & -11 ADDED	11-6-47	H.K.
F	10100-2 WAS 10581 FOR -8	10-7-46	E.L.N
E	-8 & -9 ADDED	4-17-46	C.L.W
D	REDRAWN & REVISED	10-2-45	L.E.K.

THIS DRAWING IS THE PROPERTY OF THE PIPER AIRCRAFT CORP. AND ITS POSSESSION BY UNAUTHORIZED PERSONS SHALL NOT BE CONSTRUED AS PERMISSION TO REPRODUCE FOR SALE, IN WHOLE OR IN PART, ANY DEVICES SHOWN THEREON

MODEL	PER PLANE	NEXT ASSEMBLY	SUPERSEDES	SUP. BY
NOTED	NOTED	NOTED		NOTED

PIPER AIRCRAFT CORP.
LOCK HAVEN, PENNA.

PART No.	NO. REQ.	NAME / MATERIAL
11441-8		
11441-5		
10100-2		
10100		
11461-3		
11461-2	1	END PLATE
11441-4		
11441-3		
11441-2		
10541	1	REINFORCEMENT PLATE

SCALE FULL SIZE | TOTAL WT.—LBS.

FINISH—PIPER SPECIFICATION #10

MANUFACTURING PRACTICES—PIPER SPECIFICATION #9

END PLATE ASSEMBLY - FRONT LIFT STRUT

L.E.K.	M.G.S.		12551
10-2-45	10-2-45		
DRAFTSMAN	CHECKER	STANDARDS	

530

A530

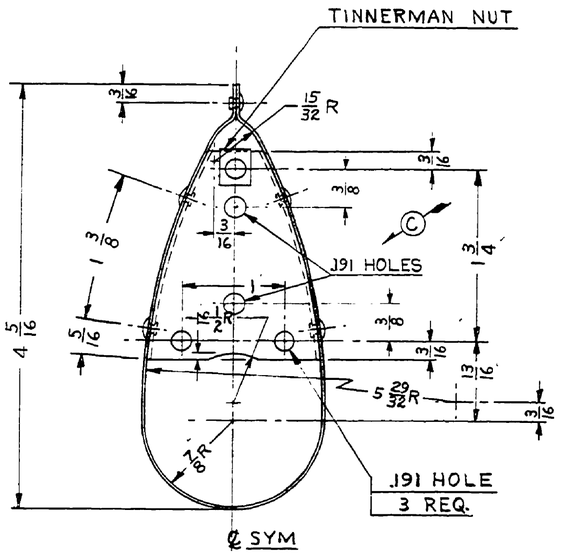

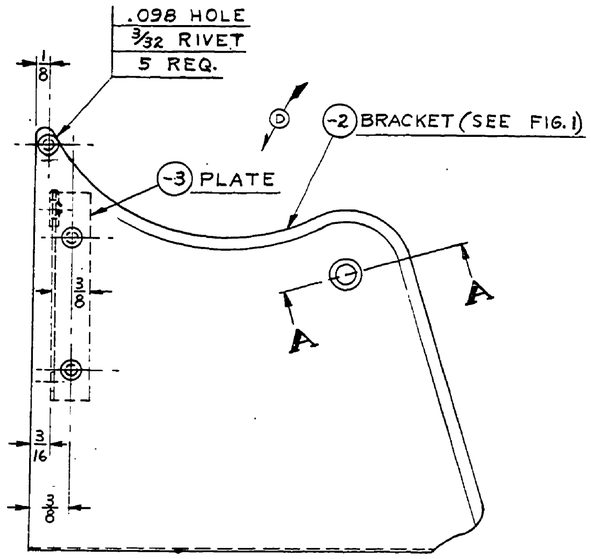

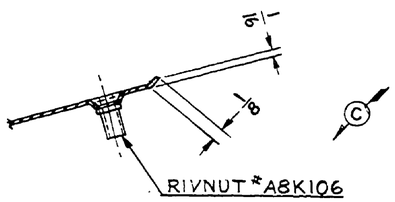

SECTION A—A

.199 HOLE
DIMPLE 100°x.371
FINISH DRILL .221
2 REQ.

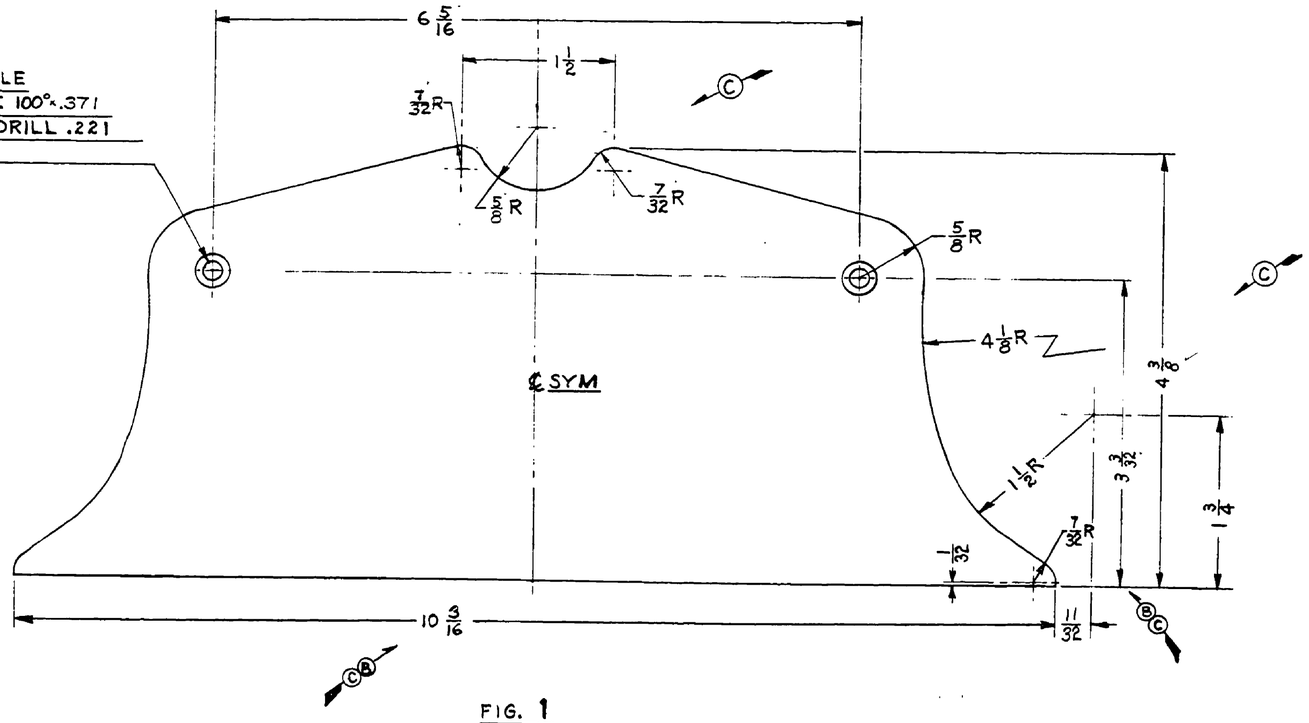

FIG. 1
FLAT PATTERN DETAIL OF -2 BRACKET.

	1	RIVNUT #A8K106	
	5	3/32 x 3/16 25 BR. HD. ALUM. RIVET	
	1	TINNERMAN NUT #C6487-632-1	
-3	1	.032 x 2 1/8 x 2 7/16	52S-1/2 H. ALUM.
-2	1	.032 x 4 5/8 x 10 3/16	52S-1/2 H. ALUM.
PART No.	No. REQ.	SIZE	DESCRIPTION
		MATERIAL	

SCALE FULL SIZE — TOTAL WT.—LBS.
FINISH—PIPER SPECIFICATION #10
MANUFACTURING PRACTICES—PIPER SPECIFICATION #9

LET.	REVISION	DATE	BY
D	FABRIC BRAKE EXTENDED	12-8-50	HRK
C	RIVNUT & 2-.191 HOLES ADDED -2 FLAT PATTERN REVISED	6-9-50	C.K.
B	10 3/16 WAS 9 13/16; 1/8 R WAS 5/32 R	1-5-50	HRK
A	NOTE REVISED	10-12-49	C.K.

THIS DRAWING IS THE PROPERTY OF THE PIPER AIRCRAFT CORP. AND ITS POSSESSION BY UNAUTHORIZED PERSONS SHALL NOT BE CONSTRUED AS PERMISSION TO REPRODUCE FOR SALE, IN WHOLE OR IN PART. ANY DEVICES SHOWN THEREON

MODEL | PER PLANE | NEXT ASSEMBLY | SUPERSEDES | SUP. BY

PIPER AIRCRAFT CORP.
LOCK HAVEN, PENNA.

BRACKET ASSEMBLY—
NAVIGATION LIGHT

DRAFTSMAN	CHECKER	STANDARDS	
C. F. K. 8-16-49	H. R. K. 9-12-49		12560

758

A758

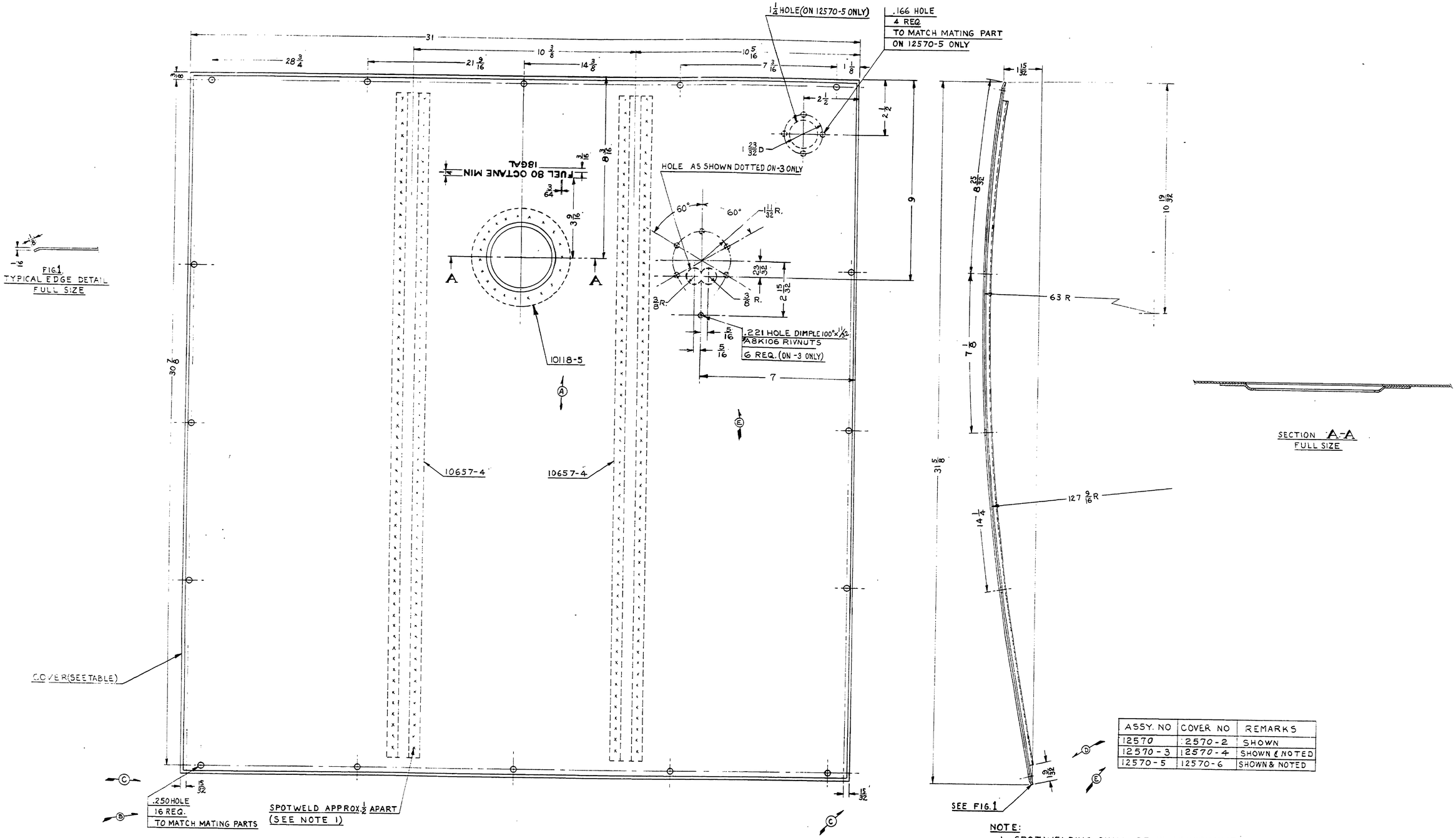

FIG. 1
TYPICAL EDGE DETAIL
FULL SIZE

ASSY. NO	COVER NO	REMARKS
12570	12570-2	SHOWN
12570-3	12570-4	SHOWN & NOTED
12570-5	12570-6	SHOWN & NOTED

NOTE:
1. SPOTWELDING SHALL BE IN ACCORDANCE WITH PIPER REPORT NO. 400.

PART No.	No. REQ.	SIZE	DESCRIPTION
	6	RIVNUTS #A8K'06 (ON-3 ONLY)	
10657-4	2	REINFORCEMENT	
10118-5	1	REINFORCEMENT	
(SEE TABLE)	1	.032×31×31 7/8	24 S-T ALCLAD ALUM.

MATERIAL

SCALE 6 IN. = 1 FT. & NOTED — TOTAL WT.—LBS.
FINISH—PIPER SPECIFICATION #10
MANUFACTURING PRACTICES—PIPER SPECIFICATION #9

LET.	REVISION	DATE	BY
F	-5 ADDED	4-2-51	C.K.
E	6 RIVNUTS, NOTE, -3, HOLES (DIM) ADDED	2-15-51	J.M.M.
D	1 11/32 WAS 23/32	12-6-50	HRK
C	15/32 WAS 9/32	6-6-50	C.K.
B	16 .250 HOLES WAS 20	11-10-49	HRK
A	10118-5 WAS 12570-3	10-6-49	R.R.

MODEL | PER PLANE | NEXT ASSEMBLY | SUPERSEDES | SUP. BY

THIS DRAWING IS THE PROPERTY OF THE PIPER AIRCRAFT CORP. AND ITS POSSESSION BY UNAUTHORIZED PERSONS SHALL NOT BE CONSTRUED AS PERMISSION TO REPRODUCE FOR SALE, IN WHOLE OR IN PART, ANY DEVICES SHOWN THEREON.

PIPER AIRCRAFT CORP.
LOCK HAVEN, PENNA.

COVER ASSEMBLY-FUEL TANK

DRAFTSMAN	CHECKER	STANDARDS
C. E. K. 8-30-49	H. R. K. 9-7-49	

12570

Philadelphia Blue Print Co. 150 8-1-46

A863

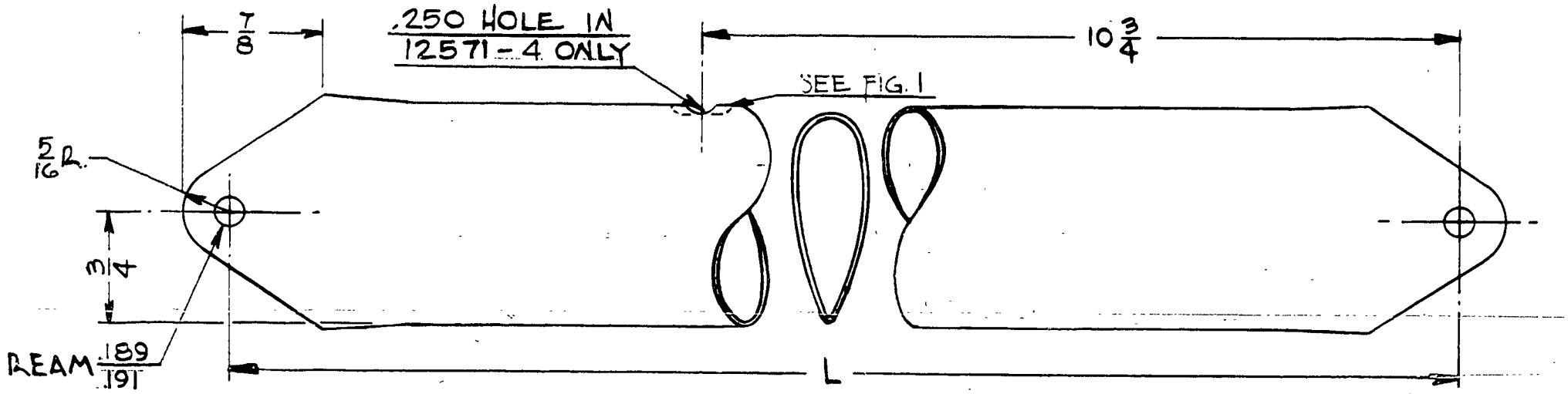

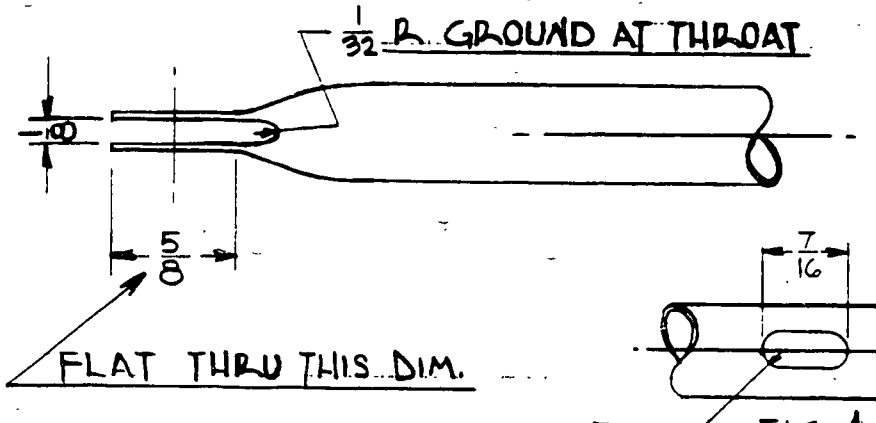

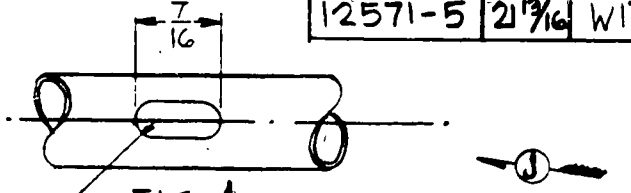

FIG. 1
HOLE DETAIL-5 ONLY

PART NO.	L	MODEL	PER SHIP	NEXT ASSEMBLY
12571-2	$21\frac{3}{16}$	J3, L-4A	1	13395
12571-3	$21\frac{1}{2}$	J3, L-4A	2	13395
12571-4	$21\frac{13}{16}$	J3, L-4A	1	12931
12571-5	$21\frac{3}{16}$	WITH HOLE AS SHOWN IN FIG. 1		

NOTE:
BOTH ENDS ARE IDENTICAL.

LET	REVISION	DATE	BY
K	REDRAWN WITHOUT CHANGE	6-12-51	M.G.
J	-5 ADDED	5-11-51	I.E.M.
H	REDRAWN & REVISED	8-31-43	R.R.F.

MODEL	PER PLANE	NEXT ASSEMBLY	SUPERSEDES	SUP. BY
NOTED	NOTED	NOTED	E-1-1/2	

THIS DRAWING IS THE PROPERTY OF THE PIPER AIRCRAFT CORP. AND ITS POSSESSION BY UNAUTHORIZED PERSONS SHALL NOT BE CONSTRUED AS PERMISSION TO REPRODUCE FOR SALE IN WHOLE OR IN PART ANY DEVICES SHOWN THEREON.

PIPER AIRCRAFT CORP.
LOCK HAVEN, PENNA.

PART NO.	NO. REQ.	SIZE	DESCRIPTION / MATERIAL
84971	-		STREAMLINE TUBE SECTION
		NOTED	PIPER SECTION 84971

SCALE FULL SIZE | TOTAL WT.—LBS.
FINISH—PIPER SPECIFICATION # 10
MANUFACTURING PRACTICES—PIPER SPECIFICATION # 9

STRUTS - WING JURY

DRAFTSMAN	CHECKER	STANDARDS
R. FRANK 8-31-43	C.K. 9-1-43	

12571

127



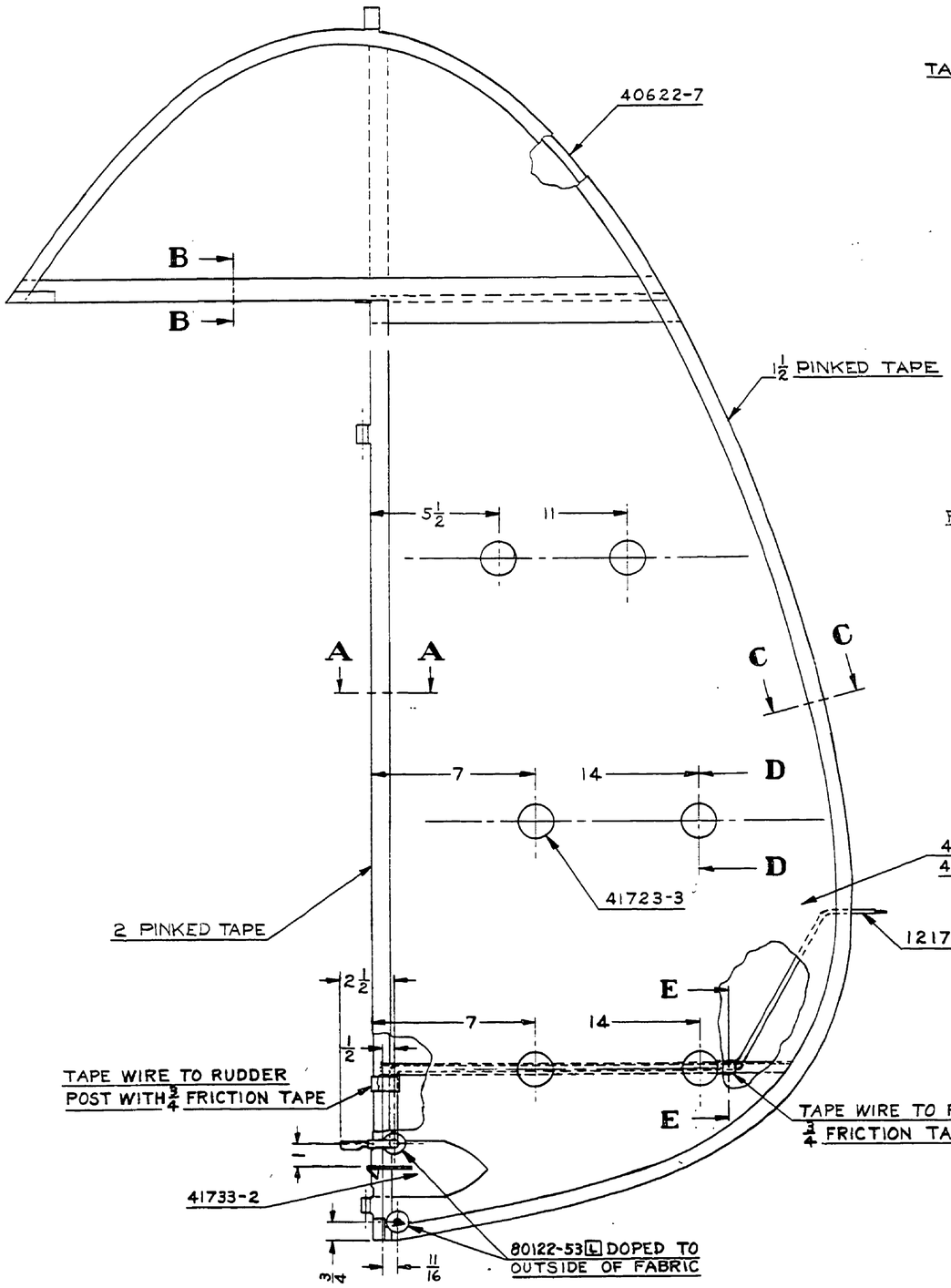

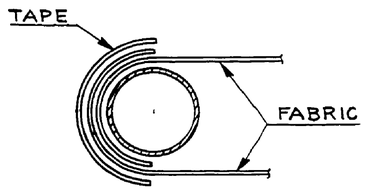

SECTION A-A
FULL SIZE

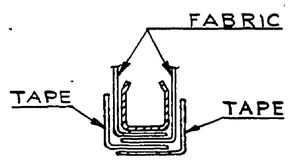

SECTION B-B
FULL SIZE

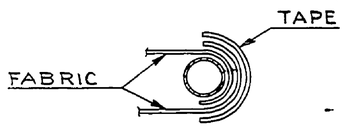

SECTION C-C
FULL SIZE

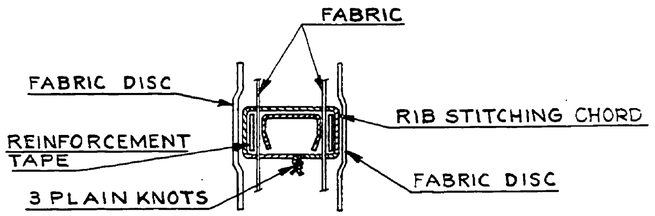

SECTION D-D
FULL SIZE

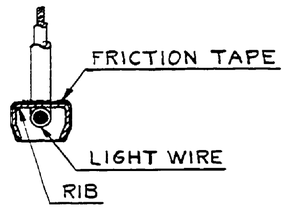

SECTION E-E
FULL SIZE

NOTE:
1. PARTS MARKED L USED ON LEFT SIDE ONLY.
   PARTS MARKED R USED ON RIGHT SIDE ONLY.
2. FABRIC DOPED TO FRAME AND OVERLAPPED. SEAMS DOPED AND COVERED WITH PINKED TAPE AS SHOWN. (OVERLAP NOT LESS THAN ONE INCH).

PART NO.	NO. REQ.	SIZE	DESCRIPTION / MATERIAL
	1	¾ × 12	FRICTION TAPE
	1	54 LONG	BARBOURS #7 STITCHING CORD
	12	⅜ × ¾	HERRINGBONE WEAVE COTTON TAPE
	1	1½ × 100	PINKED TAPE S.A.E.
	1	2 × 106	SPEC. AMS 3806
80122-53	2	GROMMET	
42142-1	1	FABRIC	
42142	1	FABRIC	
41733-2	2	FABRIC REINF.	
41723-3	12	FABRIC DISC	
40622-7	1	RUDDER ASSEMBLY	
12177-39	1	WIRE ASSEMBLY	

SCALE 3 IN. = 1 FT. & NOTED — TOTAL WT.—LBS.
FINISH—PIPER SPECIFICATION #10
MANUFACTURING PRACTICES—PIPER SPECIFICATION #9

RUDDER ASSEMBLY—COVERED

LET.	REVISION	DATE	BY

THIS DRAWING IS THE PROPERTY OF THE PIPER AIRCRAFT CORP. AND ITS POSSESSION BY UNAUTHORIZED PERSONS SHALL NOT BE CONSTRUED AS PERMISSION TO REPRODUCE FOR SALE, IN WHOLE OR IN PART, ANY DEVICES SHOWN THEREON

MODEL	PER PLANE	NEXT ASSEMBLY	SUPERSEDES	SUP. BY

PIPER AIRCRAFT CORP.
LOCK HAVEN, PENNA.

C. E. K.	H. R. K.		12573
9-1-49	9-12-49		
DRAFTSMAN	CHECKER	STANDARDS	

A759

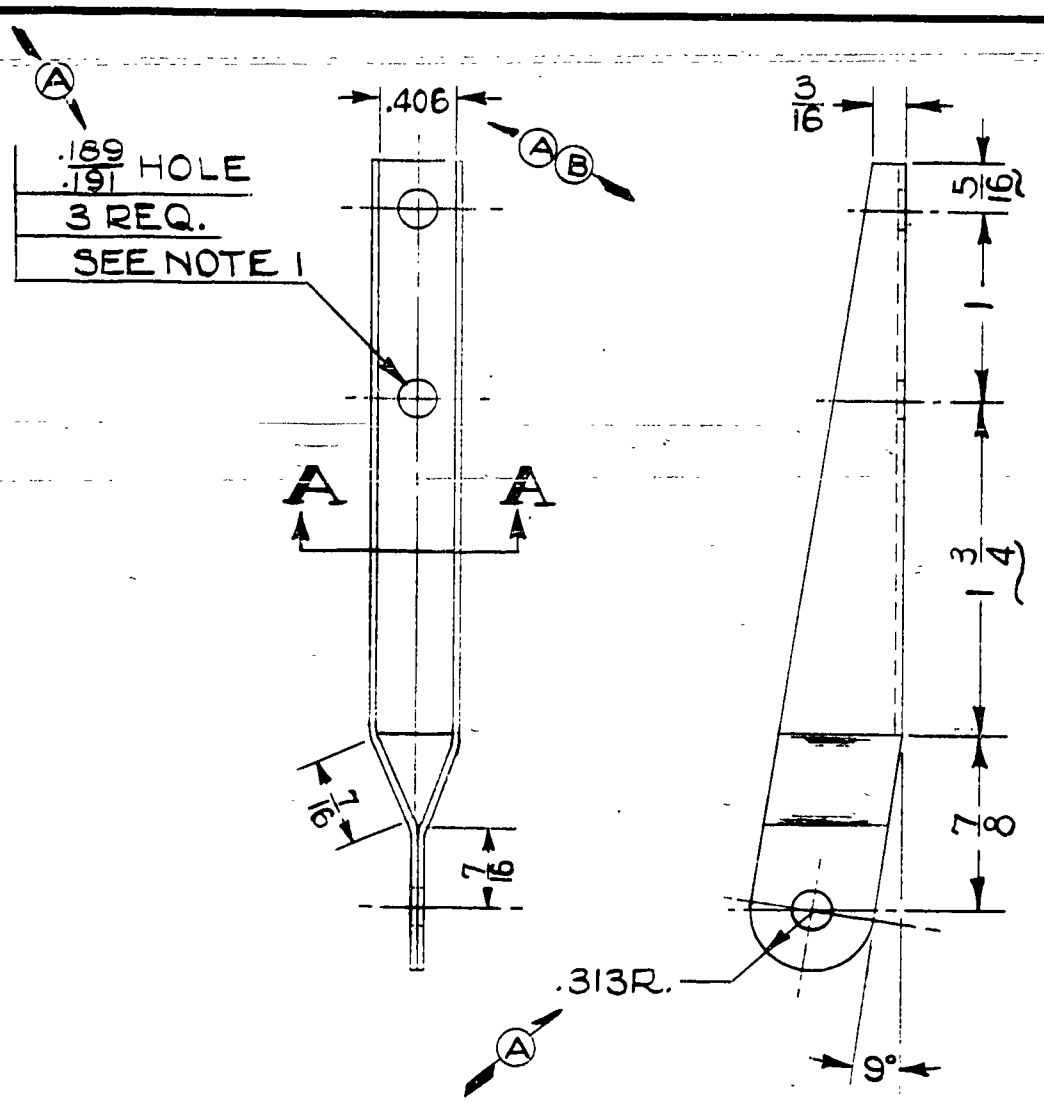

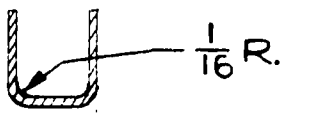

SECTION A-A

A

NOTE 1.

THESE HOLES SHALL COINCIDE WITH RELATED HOLES ON FRONT & REAR SPARS.

TC-8	4	12941	
J-4B	4	12941	
J-4A	4	12941	
J3	4	12941, 15556	J3-A105
MODEL	PER PLANE	NEXT ASSEMBLY	SUPERSEDES / SUP. BY

THIS DRAWING IS THE PROPERTY OF THE PIPER AIRCRAFT CORP. AND ITS POSSESSION BY UNAUTHORIZED PERSONS SHALL NOT BE CONSTRUED AS PERMISSION TO REPRODUCE FOR SALE IN WHOLE OR IN PART ANY DEVICES SHOWN THEREON.

LET	REVISION	DATE	BY
C	REDRAWN WITHOUT CHANGE	6-12-51	I.E.M.
B	.406 WAS .375	6-14-43	H.J.G.
A	DIM'S. REVISED & NOTE ADDED	4-28-43	C.K.

PIPER AIRCRAFT CORP.
LOCK HAVEN, PENNA.

PART NO.	NO. REQ.	SIZE	MATERIAL / DESCRIPTION
		.032 × 2 × 4 1/4	#1025 STEEL

SCALE FULL SIZE | TOTAL WT.—LBS.

FINISH—PIPER SPECIFICATION # 10

MANUFACTURING PRACTICES—PIPER SPECIFICATION # 9

FITTING – SPAR JURY STRUT

W.H.O.	R.C.M.	STANDARDS	
10-9-41	10-14-41		12581
DRAFTSMAN	CHECKER		

128

A 128

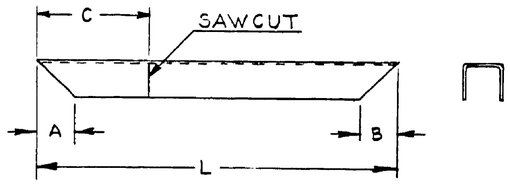

TYPE 1

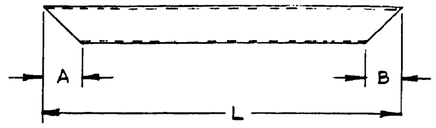

TYPE 2

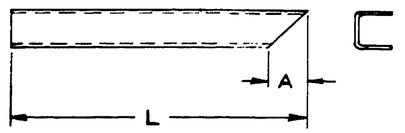

TYPE 3

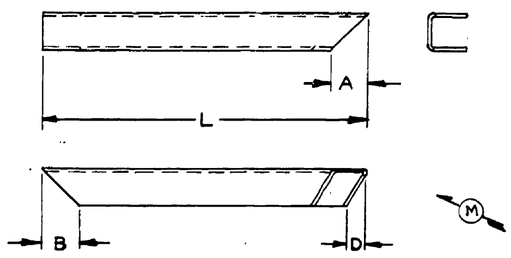

TYPE 4

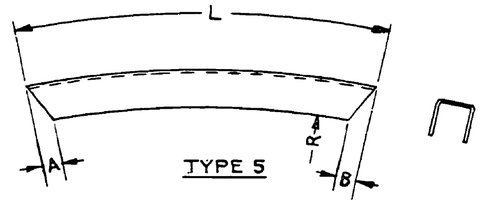

TYPE 5

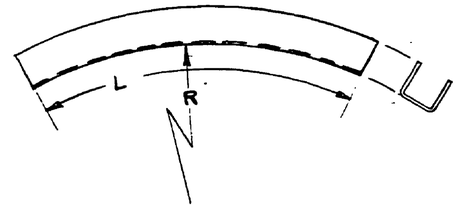

TYPE 6

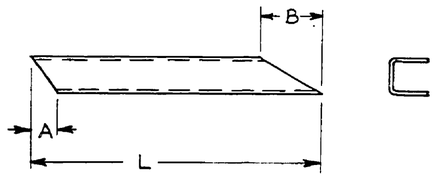

TYPE 7

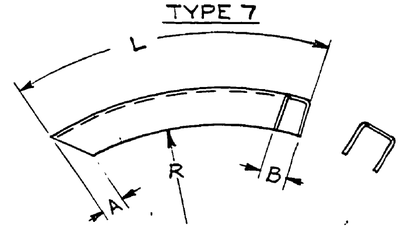

TYPE 8

PART NO.	L	TYPE	A	B	REMARKS
12590-2	12 1/8	2	3/16	3/16	
12590-3	17	1	—	—	
12590-4	17 3/16	3	13/16	—	
12590-5	8 1/8	4	13/16	3/8	
12590-6	6 7/8	1	—	—	
12590-7	25 5/8	5	3/8	—	R = 60 1/4
12590-8	19 1/2	5	3/8	3/8	R = 60 1/4 CUT 'A' END AS SHOWN IN TYPE 2
12590-9	3 3/8	6			R = 3 1/2
12590-10	25	1	—	—	
12590-11	5 1/2	1	—	3/8	
12590-12	1 3/16	1	3/8	3/8	
12590-13	1 5/8	1	—	—	
12590-14	2 5/8	1	—	—	
12590-15	11/8	1	—	—	
12590-16	21/8	7	1/4	5/8	
12590-17	2 5/8	8	1/4	1/4	R=2 7/8
12590-18	2 5/8	8	1/4	1/4	R=2 7/8 OPP. TO -17
12590-19	21 1/2	2	2 1/2	—	
12590-20	21 1/2	2	2 1/2	—	OPP. TO -19
12590-21	2 3/8	1	—	—	
12590-22	2 1/8	1	—	—	
12590-23	21/8	7	1/4	5/8	OPP. TO -16
12590-24	1 1/2	1	3/8	3/8	
12590-25	8 1/2	1	—	—	C = 1 1/4
12590-26	3	5	3/8	—	R = 2 5/8
12590-27	16 3/8	1	—	—	
12590-28	4 1/2	4	1/4	3/8	D = 3/8
12590-29	4 1/2	4	1/4	3/8	D = 3/8 OPP. TO -28
12590-30	5 3/4	4	3/8	3/8	
12590-31	5 3/4	4	3/8	3/8	OPP. TO -30
12590-32	8 7/8	1	—	4 1/2	
12590-33	8 1/2	1	—	3/8	
12590-34	15 3/8	2	1 3/8	—	

PART NO.	L	TYPE	A	B	REMARKS
12590-35	3/8	1	—	—	
12590-36	1 1/8	1	—	3/8	
12590-37	12	1	1 9/16	1/8	
12590-38	15 3/8	2	1 3/8	—	OPPOSITE TO -34
12590-39	11	1	3/8	—	

PART NO.	L	TYPE	A	B	REMARKS

SEE ALSO DWGS. 22222 & 22762

LET.	REVISION	DATE	BY
M	-26 TO -29 INC. ADDED; TYPE 4 REVISED	1-19-51	C.K.
L	-25 ADDED	12-7-50	H.R.K.
K	-24 ADDED	11-6-50	R.M.
J	17 WAS 16 3/4 ON -3	11-1-50	C.K.
H	-13 TO -23 INC. ADDED	10-10-50	H.R.K.
G	19 1/2 WAS 19 3/8, 3/8 WAS 1/2 FOR -8	9-14-50	F.C.S.
F	-12 ADDED	6-13-50	C.K.
E	-11 ADDED	5-17-50	C.K.
D	-10 ADDED	2-6-50	C.K.
C	-9 & TYPE 6 ADDED		
B	25 5/8 WAS 14 1/2 FOR -7, -8 ADDED	12-6-49	K.D.
A	TYPE 5, -6 & -7 ADDED		
	TYPE 3 & 4, -4 & -5 ADDED	11-15-49	C.K.

LET.	REVISION	DATE	BY
P	-35 ADDED	3-20-51	H.H.W.
O	-32 TO -38 INC. ADDED	2-19-51	H.H.W.
N	-30 & -31 ADDED	2-6-51	H.H.W.

THIS DRAWING IS THE PROPERTY OF THE PIPER AIRCRAFT CORP. AND ITS POSSESSION BY UNAUTHORIZED PERSONS SHALL NOT BE CONSTRUED AS PERMISSION TO REPRODUCE FOR SALE, IN WHOLE OR IN PART, ANY DEVICES SHOWN THEREON

MODEL	PER PLANE	NEXT ASSEMBLY	SUPERSEDES	SUP. BY

PIPER AIRCRAFT CORP.
LOCK HAVEN, PENNA.

84501 | DWG. REQ'D ONLY | CHANNEL SECTION

NOTED | PIPER SECTION 84501-2

PART No. | No. REQ. | SIZE | DESCRIPTION | MATERIAL

SCALE FULL SIZE | TOTAL WT.—LBS.

FINISH—PIPER SPECIFICATION #10

MANUFACTURING PRACTICES—PIPER SPECIFICATION #9

CHANNEL - 3/8 SUPERSTRUCTURE (SHEET III)

DRAFTSMAN	CHECKER	STANDARDS
R. REEDER 9-13-49	H. R. K. 9-15-49	

12590

A760

WAS E2-164

C

C

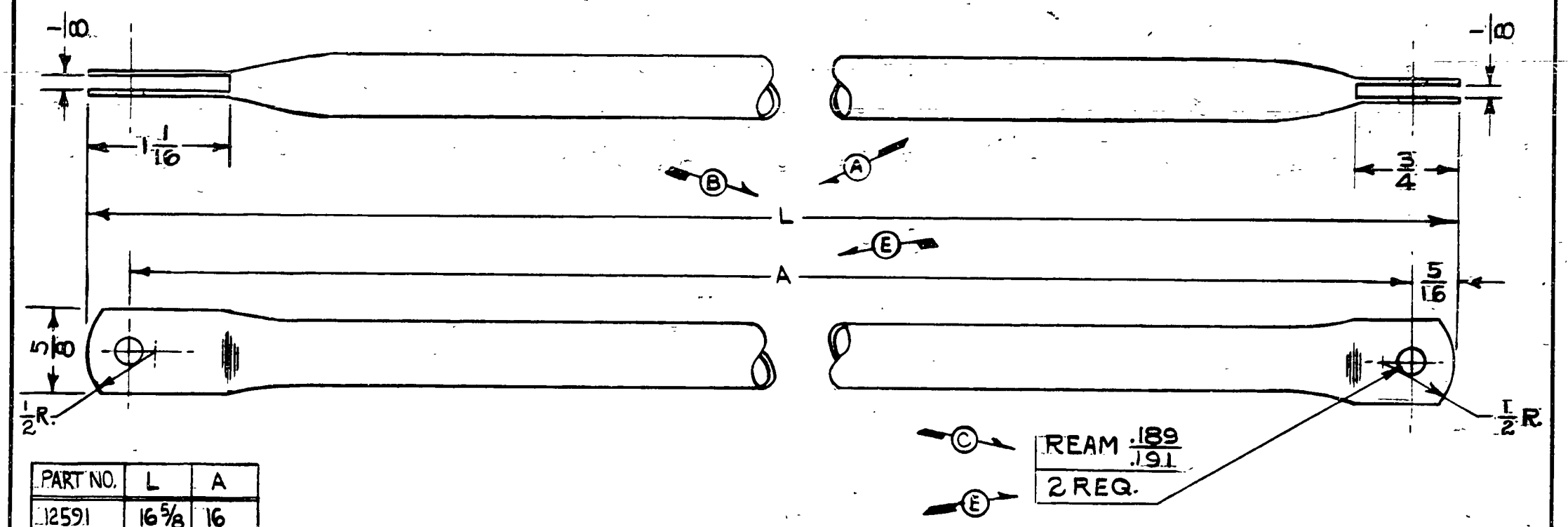

PART NO.	L	A
12591	16 5/8	16
12591-2	16 1/16	15 7/16

LIMITS, SHOP PRACTICES AND FINISH. UNLESS OTHERWISE NOTED, TO BE IN ACCORDANCE WITH PIPER SPECIFICATIONS #9 AND #10.

PART No.	No. REQ.	SIZE	DESCRIPTION
		1/2 × .028 × NOTED	#1025 STEEL TUBE

MATERIAL

SCALE FULL SIZE | TOTAL WT.-LBS.

FINISH

LET.	REVISION	DATE	BY
F	-2 & TABLE ADDED	3-25-47	L.R.
E	2 REQ. & 16 DIM. & HOLE ADDED	11-23-45	I.D.B.
D	REDRAWN WITHOUT CHANGE	4-7-44	I.D.B.
C	NOTE REM'D; REAM [illegible] WAS #11 DR.	4-29-43	R.R.F.
B	16 5/8" WAS 17"	1-22-42	J.S.B.
A	17" WAS 17 1/4"	12-11-41	C-L-W

MODEL	PER SHIP	NEXT ASSEMBLY	SUPERSEDES	SUP. BY
TG-8	2	13395		
L-4B	2	13395		
L-4A	2	13395		
J3	2	13395		

PIPER AIRCRAFT CORP.
LOCK HAVEN, PENNA.

TUBE-JURY STRUT SPACER

DRAWN	CHECKED	APPROVED
I. BARNARD 4-7-44	R.E.T. 4-8-44	

12591

129

A129

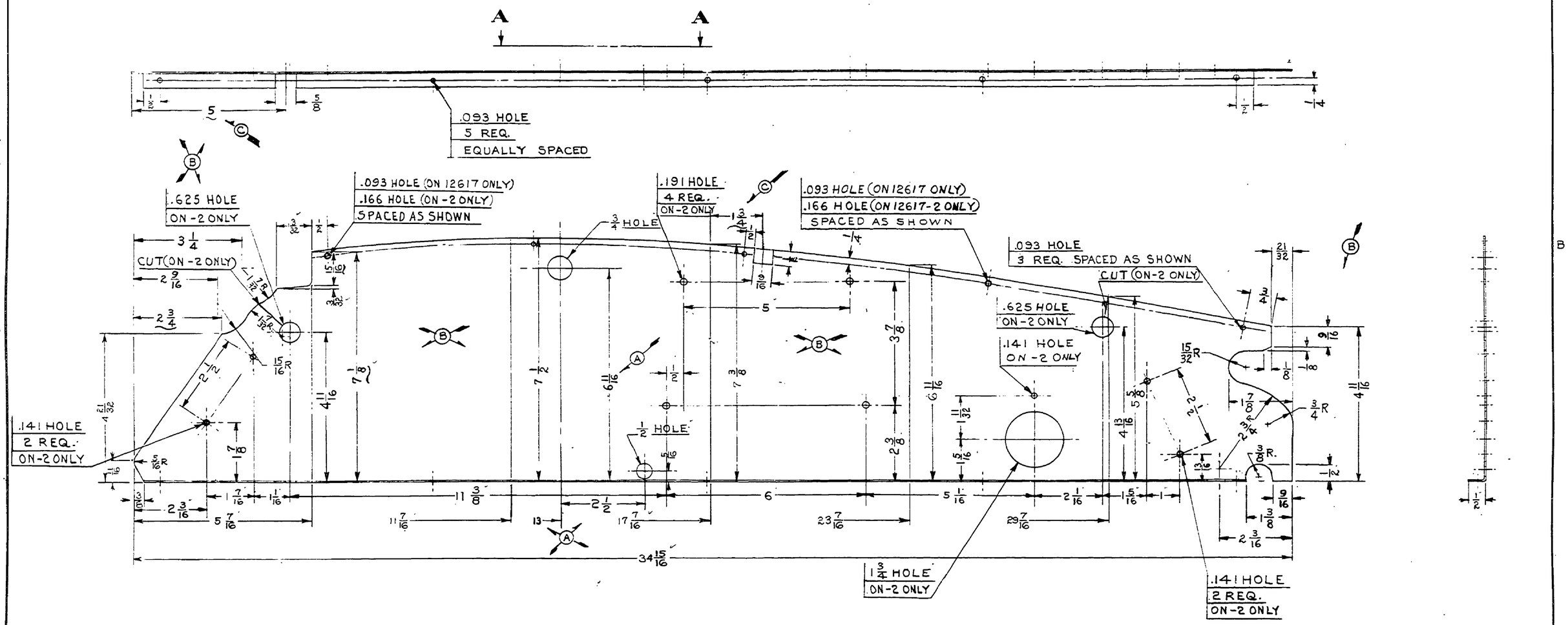

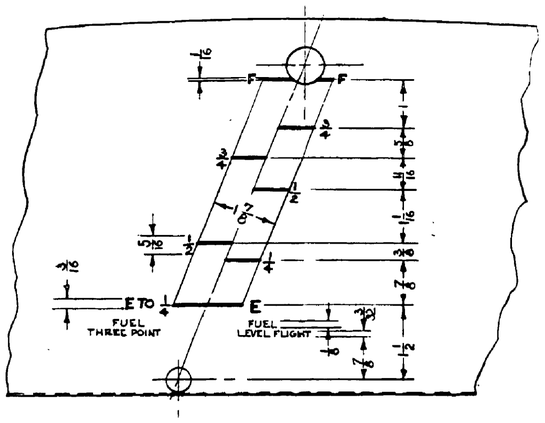

VIEW A-A
(A) STENCILING DETAIL

12617 SHOWN & NOTED
(D) 12617-2 SHOWN & NOTED

LET.	REVISION	DATE	BY
D	-2 & NOTES ADDED	4-2-51	I.M.M.
C	5 WAS 5 5/32, 1 3/4 WAS 1 5/8	2-27-51	I.M.M.
B	DIMS. REVISED	2-27-50	C.K.
A	STENCILING DETAILS ADDED. 13 WAS 13 1/2, 2 1/2 WAS 2.6", W457	12-28-49	K.D.

THIS DRAWING IS THE PROPERTY OF THE PIPER AIRCRAFT CORP. AND ITS POSSESSION BY UNAUTHORIZED PERSONS SHALL NOT BE CONSTRUED AS PERMISSION TO REPRODUCE FOR SALE, IN WHOLE OR IN PART, ANY DEVICES SHOWN THEREON

MODEL	PER PLANE	NEXT ASSEMBLY	SUPERSEDES	SUP. BY

PIPER AIRCRAFT CORP.
LOCK HAVEN, PENNA.

PART NO.	NO. REQ.	SIZE	DESCRIPTION
		.020×8 1/8×34 15/16	3S-1/2H ALUM.
		MATERIAL	

SCALE 6 IN = 1 FT. TOTAL WT.—LBS.
FINISH—PIPER SPECIFICATION #10
MANUFACTURING PRACTICES—PIPER SPECIFICATION #9

PANEL-COCKPIT UPPER LEFT TRIM

DRAFTSMAN	CHECKER	STANDARDS
R.T.M. 5-23-49	H.R.K. 10-1-49	

12617

761

A761

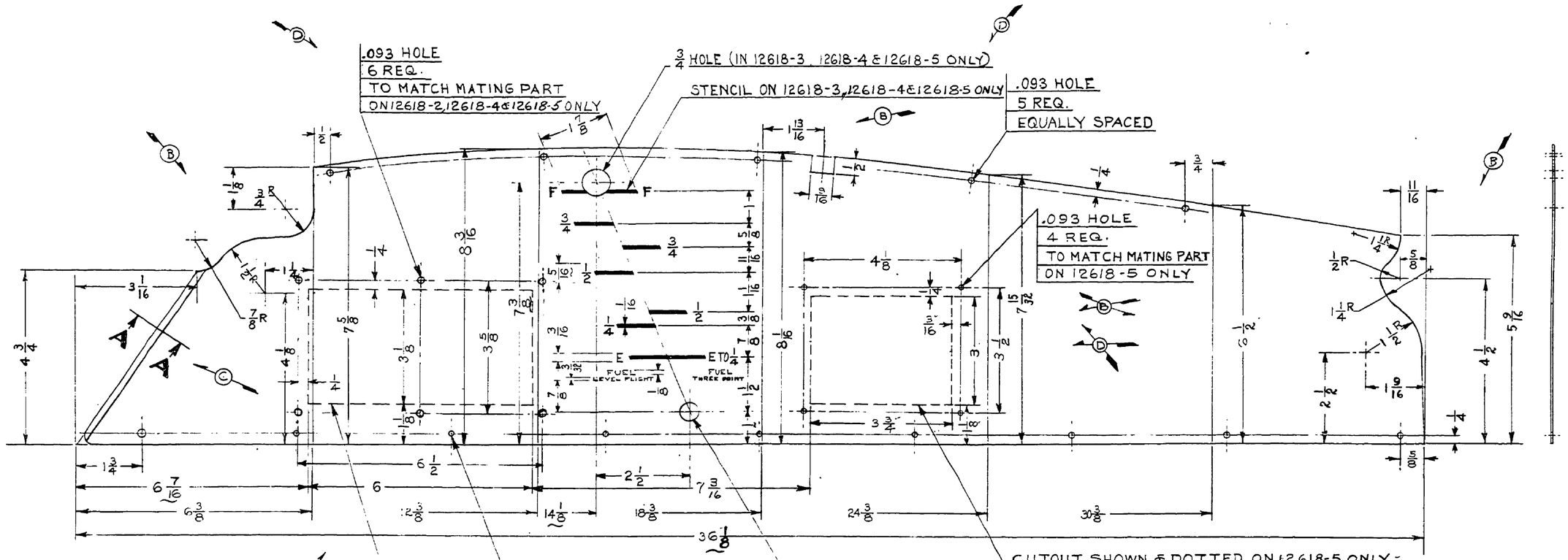

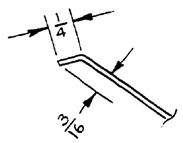

SECTION **AA**
FULL SIZE

12618 SHOWN
12618-2 SHOWN & NOTED
12618-3 SHOWN & NOTED
12618-4 SHOWN & NOTED
12618-5 SHOWN & NOTED

LET.	REVISION	DATE	BY
D	-5, .093 HOLE & DIM, NOTE ADDED -5 ADDED TO NOTES	2-25-51	T.M.
C	SECTION ADDED	10-16-50	HCS
B	DIM'S. REVISED	2-27-50	C.K.
A	-3, -4 ADDED, CUTOUT LOCATION REV.	2-22-50	H.R.K.

THIS DRAWING IS THE PROPERTY OF THE PIPER AIRCRAFT CORP. AND ITS POSSESSION BY UNAUTHORIZED PERSONS SHALL NOT BE CONSTRUED AS PERMISSION TO REPRODUCE FOR SALE, IN WHOLE OR IN PART. ANY DEVICES SHOWN THEREON

MODEL	PER PLANE	NEXT ASSEMBLY	SUPERSEDES	SUP. BY

PIPER AIRCRAFT CORP.
LOCK HAVEN, PENNA.

PART No.	NO. REQ.	SIZE	DESCRIPTION
		.020 × 8 3/16 × 36	3S-1/2H ALUM.
		MATERIAL	

SCALE 6 IN = 1 FT NOTED | TOTAL WT.—LBS.
FINISH—PIPER SPECIFICATION #10
MANUFACTURING PRACTICES—PIPER SPECIFICATION #9

PANEL-COCKPIT UPPER RIGHT TRIM

DRAFTSMAN	CHECKER	STANDARDS
R.T.M. 9-23-49	H.R.K. 10-3-49	

12618

762

A762

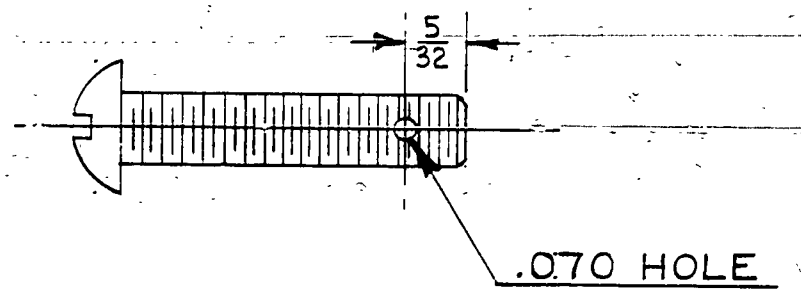

LET.	REVISION	DATE	BY	MODEL	PER PLANE	NEXT ASSEMBLY	SUPERSEDES	SUP. BY	

THIS DRAWING IS THE PROPERTY OF THE PIPER AIRCRAFT CORP. AND ITS POSSESSION BY UNAUTHORIZED PERSONS SHALL NOT BE CONSTRUED AS PERMISSION TO REPRODUCE FOR SALE, IN WHOLE OR IN PART, ANY DEVICES SHOWN THEREON.

PIPER AIRCRAFT CORP.
LOCK HAVEN, PENNA.

		#10-32 x 7/8 L.	RD. HD. MACH. SCR.
		SIZE	DESCRIPTION
PART No.	No. REQ.	MATERIAL	
SCALE TWICE SIZE		TOTAL WT.–LBS.	
FINISH–PIPER SPECIFICATION #10			
MANUFACTURING PRACTICES–PIPER SPECIFICATION #9			

SCREW–#10-32 MACHINE (SPECIAL)

DRAFTSMAN	CHECKER	STANDARDS	
R.REEDER 9-26-49	H.R.K. 9-29-49		12619

130

A130

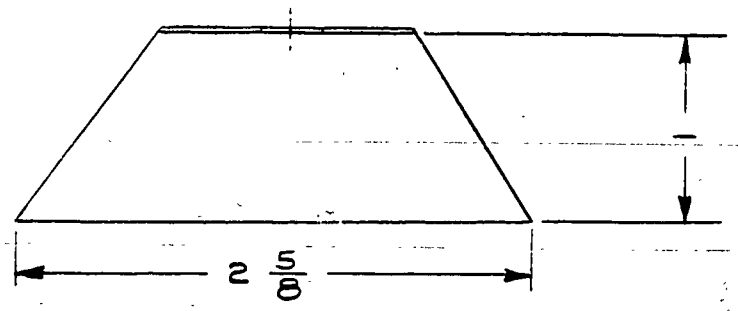

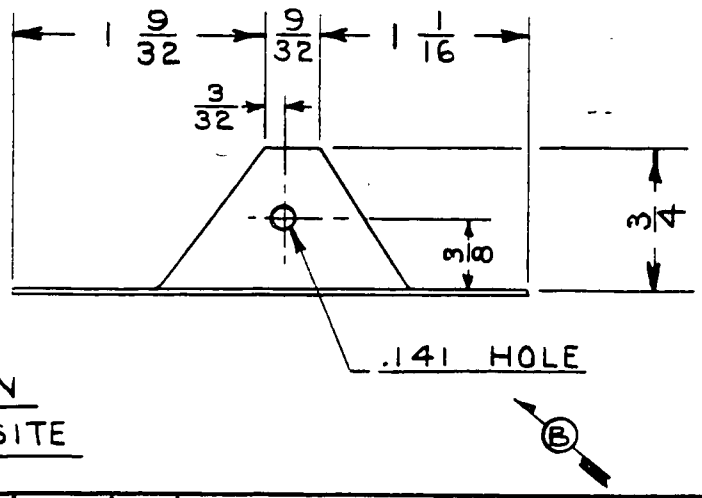

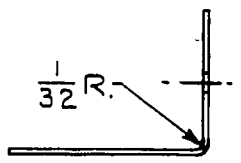

A

12641 L.H. SHOWN

12641-1 R.H. OPPOSITE

B

LET	REVISION	DATE	BY
C	REDRAWN WITHOUT CHANGE	5-25-51	I.M.M.
B	.141 HOLE ADDED	5-10-43	M.G.S.
A	PART MADE LEFT & RIGHT	5-7-43	M.G.S.

MODEL	PER PLANE	NEXT ASSEMBLY	SUPERSEDES	SUP. BY
TG-B	L. 1R.	12652		
L-4B	L. 1R.	12652		
L-4A	L. 1R.	12652		
J3	L. 1R.	12652, 16192	~~12603~~ NX-AN	

THIS DRAWING IS THE PROPERTY OF THE PIPER AIRCRAFT CORP. AND ITS POSSESSION BY UNAUTHORIZED PERSONS SHALL NOT BE CONSTRUED AS PERMISSION TO REPRODUCE FOR SALE IN WHOLE OR IN PART ANY DEVICES SHOWN THEREON.

PIPER AIRCRAFT CORP.
LOCK HAVEN, PENNA.

PART NO.	NO. REQ.	SIZE	MATERIAL
		.025 x 1 3/4 x 2 5/8"	35-½ H. ALUM.

SCALE FULL SIZE | TOTAL WT.—LBS.

FINISH—PIPER SPECIFICATION # 10

MANUFACTURING PRACTICES—PIPER SPECIFICATION # 9

GUSSET — WING TIP NOSE RIB

DRAFTSMAN	CHECKER	STANDARDS
F. B. 10-28-41	R. C. M. 11-5-41	

12641

131

A 131

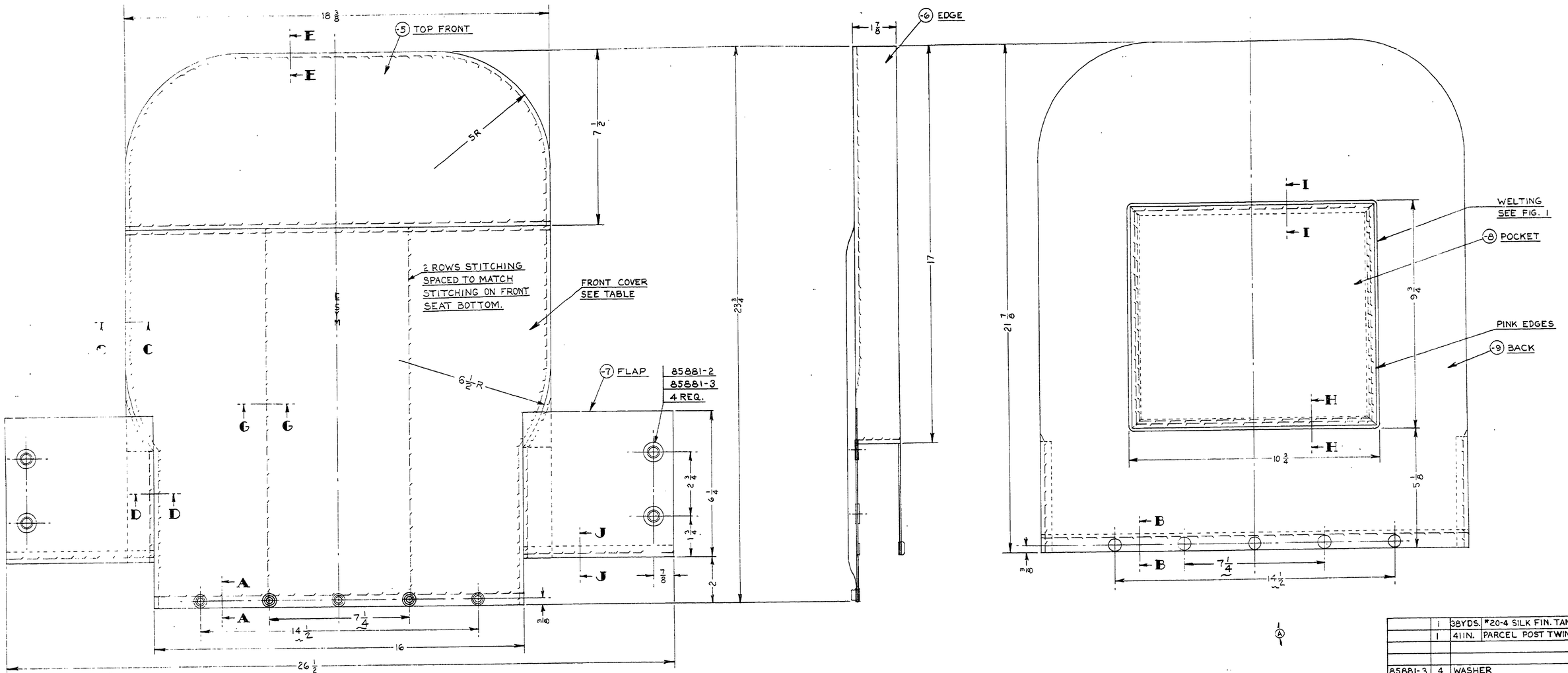

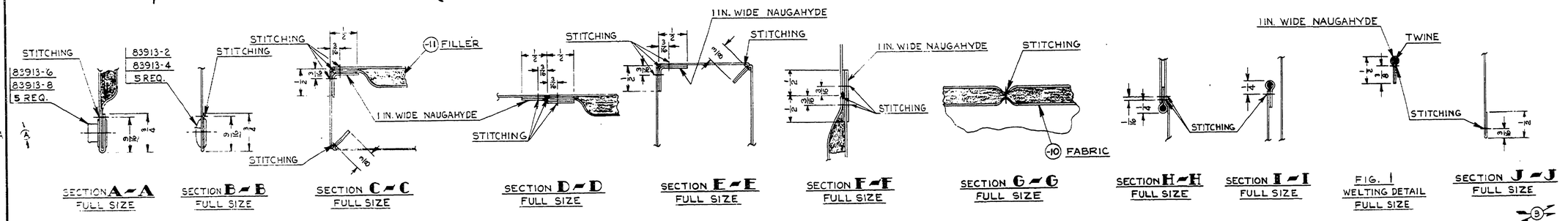

SECTION A-A FULL SIZE

SECTION B-B FULL SIZE

SECTION C-C FULL SIZE

SECTION D-D FULL SIZE

SECTION E-E FULL SIZE

SECTION F-F FULL SIZE

SECTION G-G FULL SIZE

SECTION H-H FULL SIZE

SECTION I-I FULL SIZE

FIG. 1 WELTING DETAIL FULL SIZE

SECTION J-J FULL SIZE

ASSEMBLY NO.	FRONT COVER
2642	12642-3
12642-2	12642-4

	No. REQ.	SIZE	DESCRIPTION MATERIAL
	1	38YDS.	#20-4 SILK FIN. TAN TH'D.
	1	411N.	PARCEL POST TWINE
85881-3	4		WASHER
85881-2	4		GROMMET
83913-8	5		EYELET
83913-6	5		STUD
83913-4	5		SOCKET
83913-2	5		BUTTON
-11	1	7/8×6 1/4×18 3/8	RUBBERIZED WOOL MEDIUM DENSITY
-10	1	17 1/2×19 3/8	FABRIC SAE SPEC. AMS# 3804
	1	1×123	
-9	1	19 3/8×23 1/8	"3370D-TG-119-RT-54" ANTIQUE TAN NAUGAHYDE
-8	1	9 3/4×10 3/4	
-7	2	5 3/4×6 3/4	
-6	1	2 3/8×49	
-5	1	8 1/2×19 3/8	
-4	1	17 1/2×19 3/8	"3370D-TG-119-RT-54" ANTIQUE TAN NAUGAHYDE — SEE TABLE
-3	1	17 1/2×10 3/8	FABRIC CHATHAM# 8208 PURCH. GETSINGER-FOX CO. — SEE TABLE

LET.	REVISION	DATE	BY
B	MATL. SPEC. REVISED 4-5-6-7-8-9	6-19-50	C.K.
	14 1/2 WAS 17 1/2 REQ.		
A	OF 83913-2, 83913-4, 83913-6 & 83913-8 WAS 5	1-5-50	RC

MODEL | PER PLANE | NEXT ASSEMBLY | SUPERSEDES | SUP. BY

THIS DRAWING IS THE PROPERTY OF THE PIPER AIRCRAFT CORP. AND ITS POSSESSION BY UNAUTHORIZED PERSONS SHALL NOT BE CONSTRUED AS PERMISSION TO REPRODUCE FOR SALE, IN WHOLE OR IN PART, ANY DEVICES SHOWN THEREON.

PIPER AIRCRAFT CORP.
LOCK HAVEN, PENNA.

PART NO. | SCALE 6 IN. = 1 FT. & NOTED | FINISH—PIPER SPECIFICATION #10 | MANUFACTURING PRACTICES—PIPER SPECIFICATION #9 | TOTAL WT.—LBS.

CUSHION ASSEMBLY - FRONT SEAT BACK

DRAFTSMAN	CHECKER	STANDARDS
R. REEDER 10-5-49	H.R.K. 10-	

12642

Philadelphia Blue Print Co. 150 8-1-46

A864

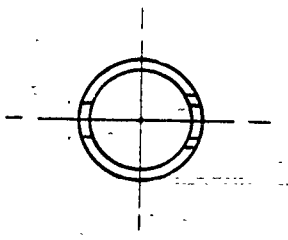

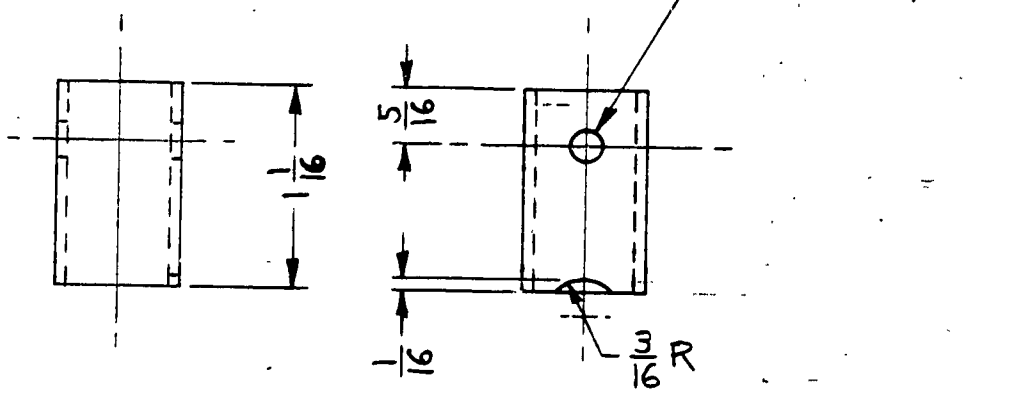

LET.	REVISION	DATE	BY	MODEL	PER PLANE	NEXT ASSEMBLY	SUPERSEDES	SUP. BY	

THIS DRAWING IS THE PROPERTY OF THE PIPER AIRCRAFT CORP. AND ITS POSSESSION BY UNAUTHORIZED PERSONS SHALL NOT BE CONSTRUED AS PERMISSION TO REPRODUCE FOR SALE, IN WHOLE OR IN PART, ANY DEVICES SHOWN THEREON.

PIPER AIRCRAFT CORP.
LOCK HAVEN, PENNA.

PART No.	No. REQ.	SIZE	DESCRIPTION / MATERIAL
		5/8 x .058 x 1 1/16	#1025 STL. TUBE

SCALE FULL SIZE — TOTAL WT.—LBS.

FINISH—PIPER SPECIFICATION #10

MANUFACTURING PRACTICES—PIPER SPECIFICATION #9

BRACKET—ANTENNA MAST

DRAFTSMAN	CHECKER	STANDARDS
C. E. K. 10-10-49	H. R. K. 10-10-49	

12651

12651

132

A 132

PART NO.	L	H	MODEL	NO. PER SHIP	NEXT ASSY.	REMARKS
2662-2	8 9/16	5 27/32	L-4A	18	13004	AS SHOWN
			J3	WOOD SPAR WING: 18	13004	
				METAL SPAR WING: 20	13556	
12662-3	8 1/2	5 27/32	L-4A-J3	2	13004	AS SHOWN
12662-4	8 9/16	5 27/32				SEE NOTE 3

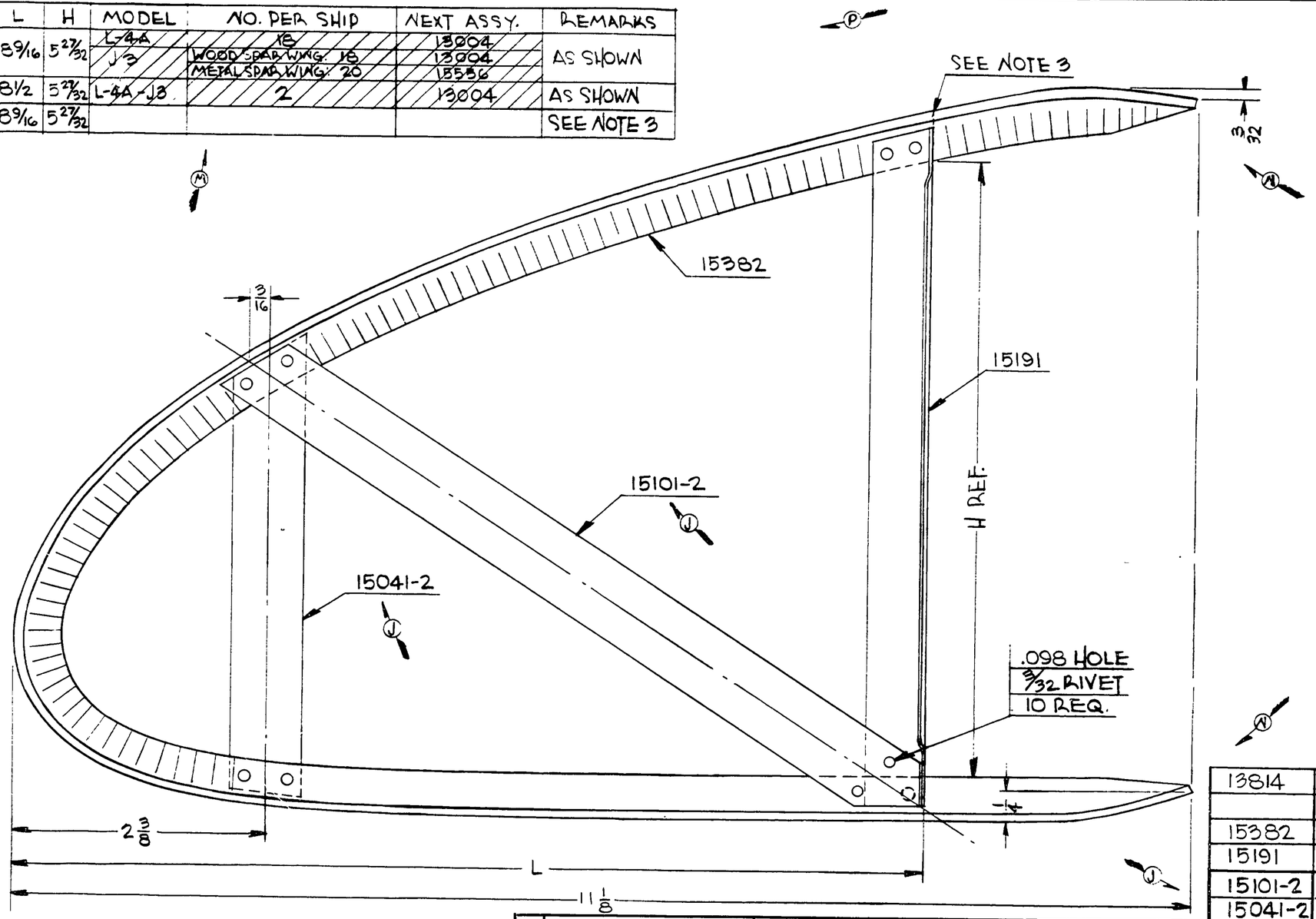

NOTES:
1. FOR NOSE RIB CONTOUR SEE DWG. 13814.
2. MIN. DISTANCE FROM CENTER OF RIVET TO END OR EDGE OF MATERIAL TO BE 1/8.
3. UPPER CAPSTRIP CUT OFF FLUSH WITH ANGLE BRACE ON -4 ONLY.

LET	REVISION	DATE	BY
Q	REDRAWN WITHOUT CHANGE	6-15-51	M.G.
P	REMARKS COL. NOTE 3 & -4 ADDED	5-9-46	H.M.Z.
O	7/8 DIM. REM.	3-4-46	L.R.
N	3/32, 1/4 & 7/8 DIM. ADDED	2-8-46	C.E.V.
M	METAL SPAR REF. ADDED FOR J3	11-3-43	R.E.T.
L	J3 MODEL REF. ADDED	8-24-43	I.D.B.
K	TABLE REVISED	8-9-43	C.E.K.
J	15041-2 WAS 15041. 15101-2 WAS 15101	6-4-43	R.R.F.
H	REDRAWN & REVISED	5-10-43	M.G.S.

NOTED MODEL	NOTED PER PLANE	NOTED NEXT ASSEMBLY	SUPERSEDES	SUP. BY

THIS DRAWING IS THE PROPERTY OF THE PIPER AIRCRAFT CORP. AND ITS POSSESSION BY UNAUTHORIZED PERSONS SHALL NOT BE CONSTRUED AS PERMISSION TO REPRODUCE FOR SALE IN WHOLE OR IN PART ANY DEVICES SHOWN THEREON.

PIPER AIRCRAFT CORP.
LOCK HAVEN, PENNA.

PART NO.	NO. REQ.	SIZE	DESCRIPTION / MATERIAL
13814	—		WING FULL RIB OUTLINE
	10	3/32 x 9/64 LH	TUBULAR CADMIUM PLATED STEEL RIVET
15382	1		CAPSTRIP
15191	1		ANGLE BRACE
15101-2	1		DIAGONAL BRACE
15041-2	1		VERTICAL BRACE

SCALE FULL SIZE | TOTAL WT.—LBS.
FINISH—PIPER SPECIFICATION # 10
MANUFACTURING PRACTICES—PIPER SPECIFICATION # 9

RIB ASSEMBLY— WING NOSE

DRAFTSMAN	CHECKER	STANDARDS
M.G.S. 5-10-43	L.E.K. 5-11-43	

12662

531

A 531

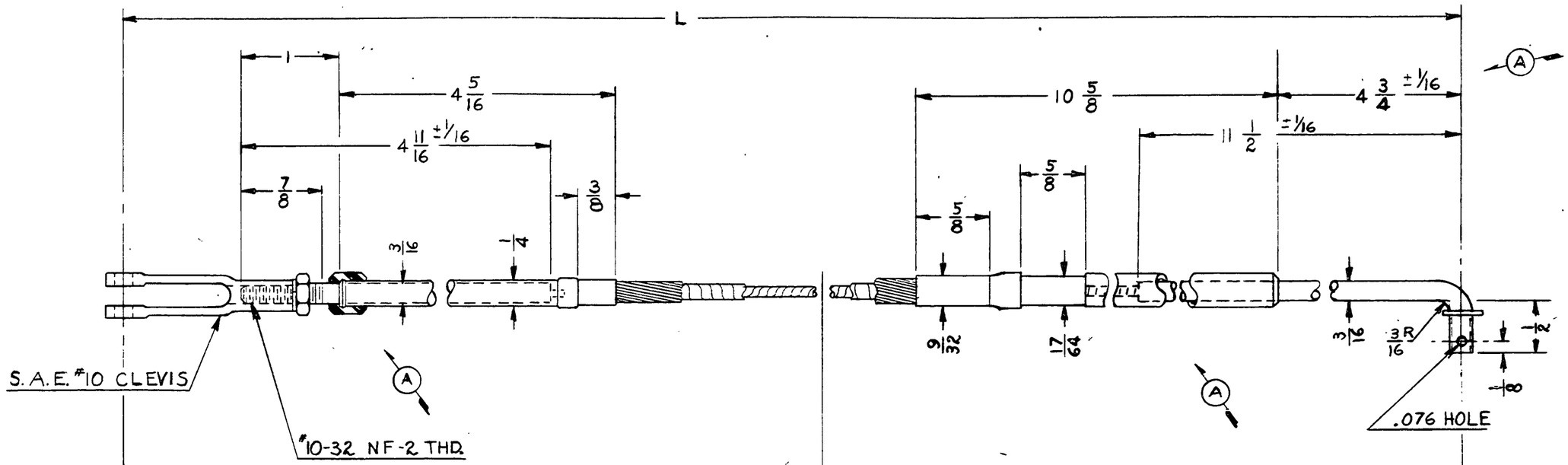

FOR DETAILS OF THROTTLE CONSTRUCTION NOT SHOWN IN THIS AREA SEE AMER. CHAIN & CABLE CO. DWG. 3-D623-1026

FOR DETAILS OF THROTTLE CONSTRUCTION NOT SHOWN IN THIS AREA SEE AMER. CHAIN & CABLE CO. DWG. SA-3271.

ASSY. NO.	L.
12694	55
12694-2	61¼

LET.	REVISION	DATE	BY
A	4 ¾ WAS 1 ¾: VIEWS REVISED	12-7-49	C.K.

MODEL	PER PLANE	NEXT ASSEMBLY	SUPERSEDES	SUP. BY

THIS DRAWING IS THE PROPERTY OF THE PIPER AIRCRAFT CORP. AND ITS POSSESSION BY UNAUTHORIZED PERSONS SHALL NOT BE CONSTRUED AS PERMISSION TO REPRODUCE FOR SALE, IN WHOLE OR IN PART, ANY DEVICES SHOWN THEREON.

PIPER AIRCRAFT CORP.
LOCK HAVEN, PENNA.

PART No.	No. REQ.	MATERIAL

SCALE FULL SIZE | TOTAL WT.–LBS.

FINISH–PIPER SPECIFICATION #10

MANUFACTURING PRACTICES–PIPER SPECIFICATION #9

CONTROL ASSEMBLY–THROTTLE

DRAFTSMAN	CHECKER	STANDARDS
C. E. K. 10-25-49	H. R. K. 10-26-49	

12694

12C97 532

A 532

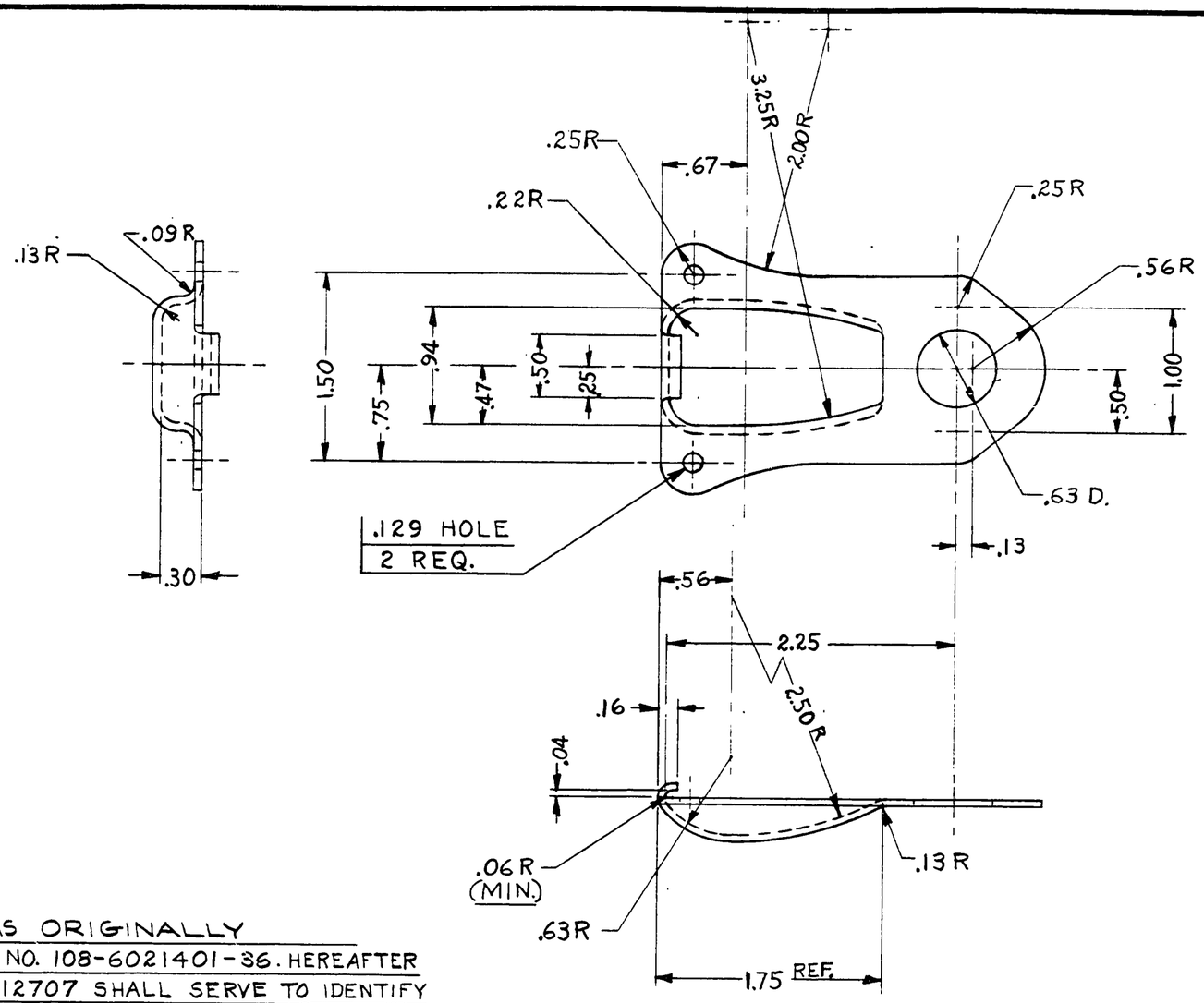

NOTE:

1. THIS PART WAS ORIGINALLY STINSON PART NO. 108-6021401-36. HEREAFTER ONLY PART NO. 12707 SHALL SERVE TO IDENTIFY THIS PART.
2. LIMITS ON DIMENSIONS UNLESS OTHERWISE SPECIFIED:
   2 PLACE DECIMALS ±.03
   3 PLACE DECIMALS ±.010

LET.	REVISION	DATE	BY

MODEL	PER PLANE	NEXT ASSEMBLY	SUPERSEDES	SUP. BY

THIS DRAWING IS THE PROPERTY OF THE PIPER AIRCRAFT CORP. AND ITS POSSESSION BY UNAUTHORIZED PERSONS SHALL NOT BE CONSTRUED AS PERMISSION TO REPRODUCE FOR SALE, IN WHOLE OR IN PART, ANY DEVICES SHOWN THEREON.

PIPER AIRCRAFT CORP.
LOCK HAVEN, PENNA.

PART NO.	No. REQ.	SIZE	MATERIAL
		.045×3×4	#1025 STEEL

SCALE FULL SIZE — TOTAL WT.–LBS.

FINISH—PIPER SPECIFICATION #10

MANUFACTURING PRACTICES—PIPER SPECIFICATION #9

CUP—COWL FASTENER

DRAFTSMAN	CHECKER	STANDARDS	
C.E.K. 11-4-49	H.R.K. 11-4-49		12707

533

A533

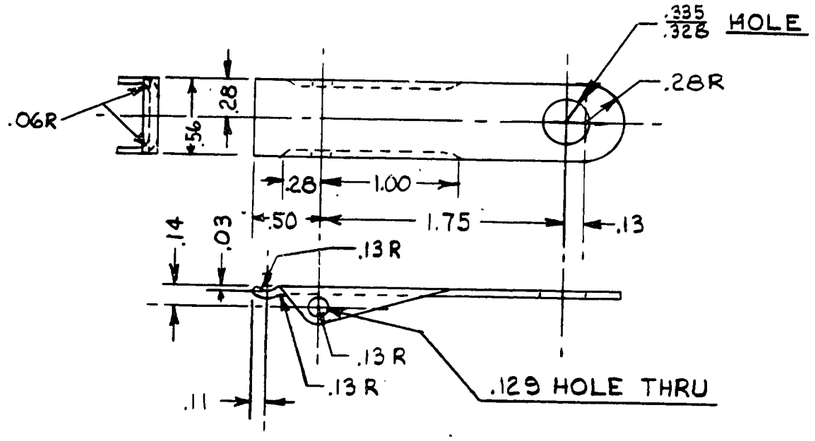

-3 DETAIL
LEVER
(SEE NOTE 1.)

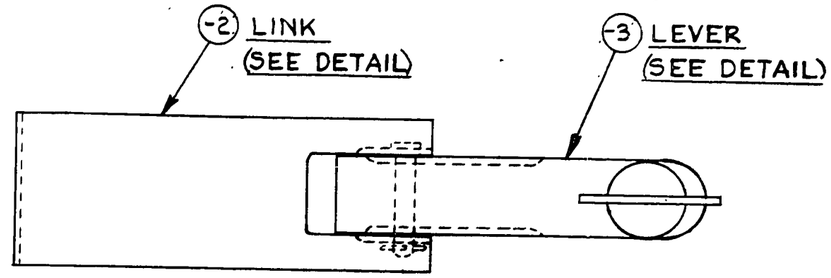

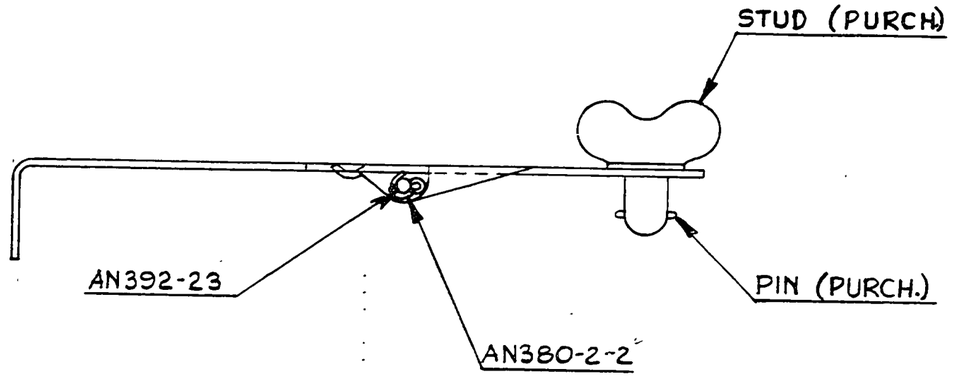

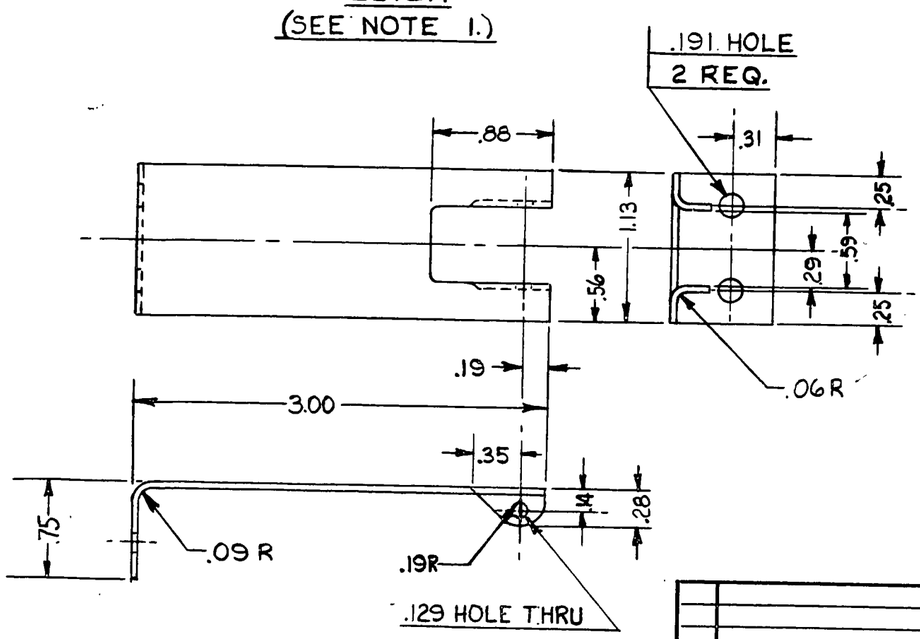

-2 DETAIL
LINK
(SEE NOTE 1)

NOTES:

1: PART NOS. 12723, 12723-2, & 12723-3 WERE ORIGINALLY STINSON PART NOS. 108-6021401-22, 108-6021401-16, & 108-6021401-18 RESPECTIVELY. HEREAFTER ONLY PART NOS. 12723, 12723-2, & 12723-3 SHALL SERVE TO IDENTIFY THESE PARTS.

2: LIMITS ON DIMENSIONS UNLESS OTHERWISE SPECIFIED:

2 PLACE DECIMALS ± .03.
3 PLACE DECIMALS ± .010.

PART No.	No. REQ.	SIZE	DESCRIPTION MATERIAL
	1		PIN # 99836 PURCHASED UNITED-CARR FASTENER CORP.
	1		STUD #W99835-2-180 CHROME PLATE FINISH #F79 OR EQUIV. PURCH. UNITED-CARR FASTENER CORP.
AN392-23	1		PIN
AN380-2-2	1		COTTER PIN
-3	1	.050 x 1 5/32 x 2 11/16	TYPE 304 ST. STEEL
-2	1	.050 x 1 5/32 x 3 3/4	#4 FINISH ANNEALED

SCALE FULL SIZE — TOTAL WT.—LBS.
FINISH—PIPER SPECIFICATION #10
MANUFACTURING PRACTICES—PIPER SPECIFICATION #9

FASTENER ASSEMBLY-COWL

LET.	REVISION	DATE	BY

MODEL	PER PLANE	NEXT ASSEMBLY	SUPERSEDES	SUP. BY

THIS DRAWING IS THE PROPERTY OF THE PIPER AIRCRAFT CORP. AND ITS POSSESSION BY UNAUTHORIZED PERSONS SHALL NOT BE CONSTRUED AS PERMISSION TO REPRODUCE FOR SALE, IN WHOLE OR IN PART, ANY DEVICES SHOWN THEREON.

PIPER AIRCRAFT CORP.
LOCK HAVEN, PENNA.

R. REEDER	H. R. K.		
11-3-49	11-3-49		
DRAFTSMAN	CHECKER	STANDARDS	

12723

534

A534

WAS J3-128

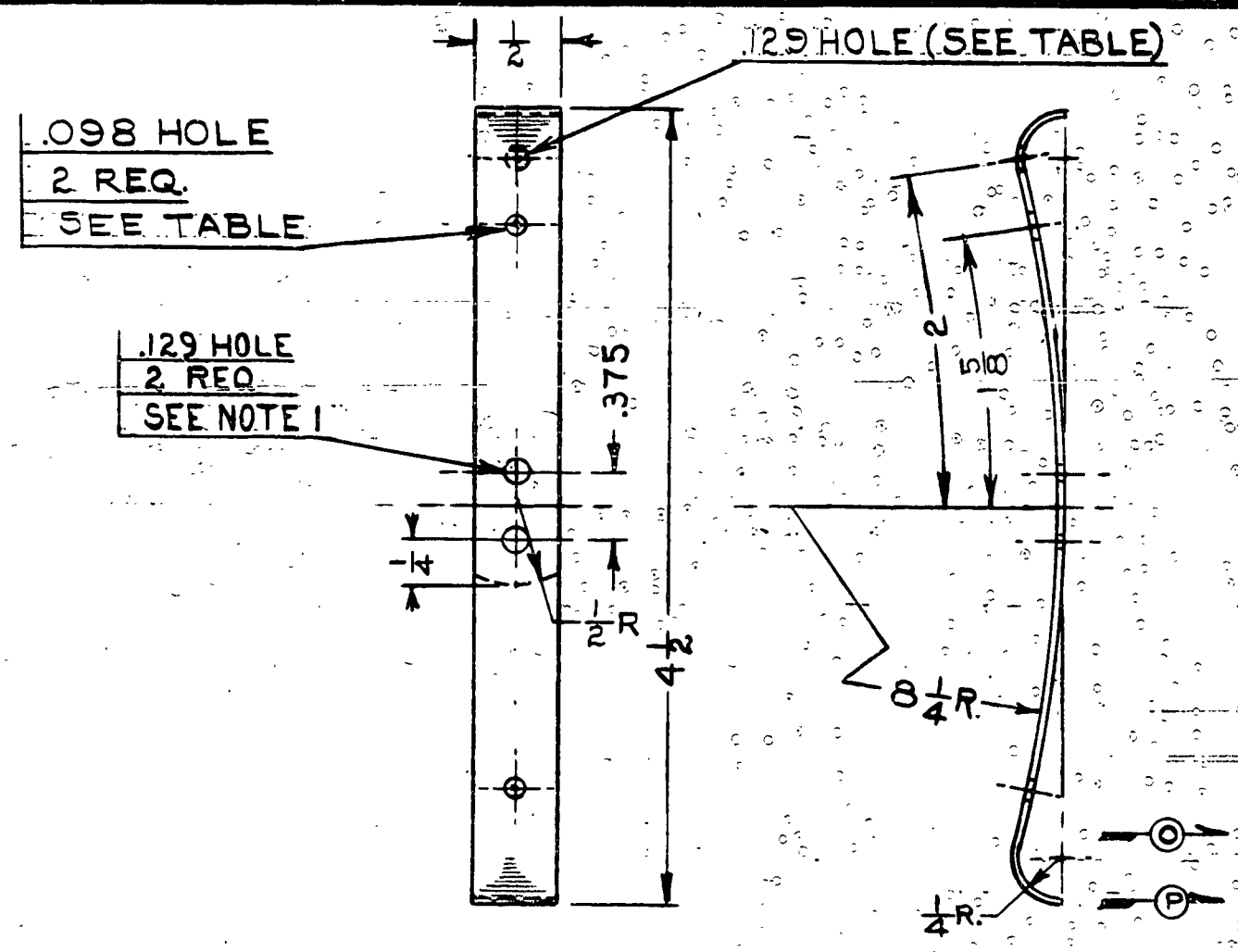

PART NO.	REMARKS
12741	WITHOUT .098 HOLES
12741-2	WITH .098 HOLES
12741-3	WITH CUTOFF & .129 HOLE AS SHOWN DOTTED; WITHOUT .098 HOLE

NOTE:
1. HOLES MUST COINCIDE WITH THOSE ON 12751

PART No.	No. REQ.	SIZE	DESCRIPTION
		.022 x 1/2 x 4 7/8	SPRING STEEL

MATERIAL

SCALE FULL SIZE — TOTAL WT.—LBS.

FINISH—PIPER SPECIFICATION #10

MANUFACTURING PRACTICES—PIPER SPECIFICATION #9

LET.	REVISION	DATE	BY
P	-3 ADDED	2-17-49	RM
O	-2 ADDED	9-9-48	RM
N	J3, 8 PER PLANE WAS 18	6-14-46	HMZ
M	N.A. 82481 REM. 37 REQ. WAS 51 - J5C	3-26-46	C.E.K.
L	J5C PER PLANE 51 WAS 23	2-13-46	E.L.N.
K	J5C PER PLANE 23 WAS 25	12-19-45	BBC
J	REDRAWN & REVISED	6-14-45	MGS

MODEL	PER PLANE	NEXT ASSEMBLY	SUPERSEDES	SUP. BY
L-4A	18	12761, 23831		
L-14	38	91189, 12761, 82481		
PE-1, J5B	25	82481, 12761		
J5C	37	12761		
J5	14	82481		
[illegible]	16	12761		
J3	8	12761, 23831		

PIPER AIRCRAFT CORP.
LOCK HAVEN, PENNA.

SPRING - DRAG WIRE INSPECTION COVER PLATE

DRAFTSMAN	CHECKER	STANDARDS
M.G.S. 6-14-45	L.E.K. 6-14-45	

12741

PENCILTEX A. & B. SMITH CO., PGH., PA.

133

A133

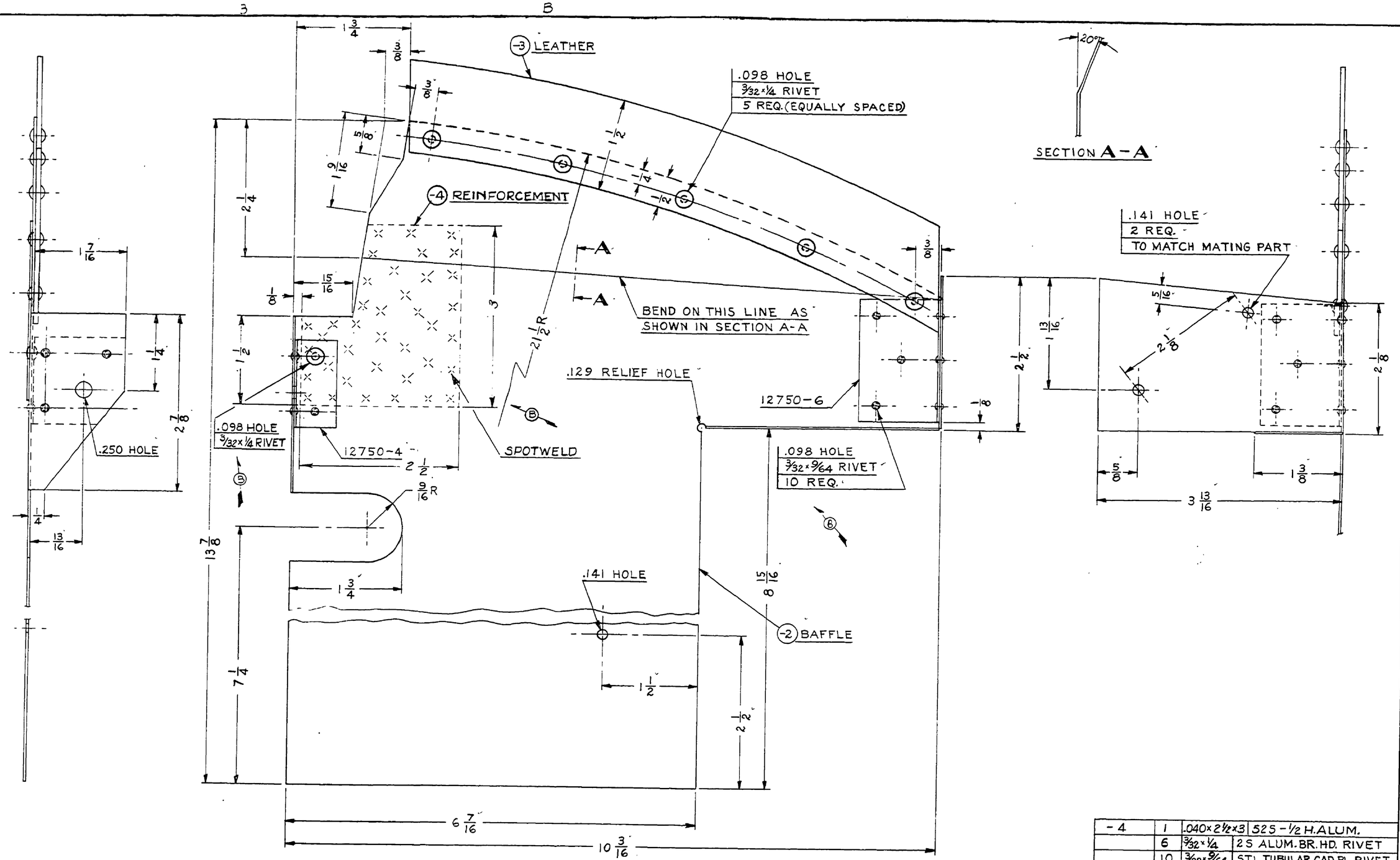

PART NO.	NO. REQ.	SIZE	DESCRIPTION MATERIAL
-4	1	.040 x 2 1/2 x 3	525 - 1/2 H. ALUM.
	6	3/32 x 1/4	2S ALUM. BR. HD. RIVET
	10	3/32 x 9/64	STL. TUBULAR CAD. PL. RIVET
12750-6	1	ANGLE	
12750-4	1	ANGLE	
-3	1	1/16 x 2 x 9 1/2	GENUINE LEATHER *IMB
-2	1	.032 x 13 7/8 x 15 7/16	52S - 1/2 H ALUM.

SCALE FULL SIZE — TOTAL WT.—LBS.

FINISH—PIPER SPECIFICATION #10

MANUFACTURING PRACTICES—PIPER SPECIFICATION #9

THIS DRAWING IS THE PROPERTY OF THE PIPER AIRCRAFT CORP. AND ITS POSSESSION BY UNAUTHORIZED PERSONS SHALL NOT BE CONSTRUED AS PERMISSION TO REPRODUCE FOR SALE, IN WHOLE OR IN PART, ANY DEVICES SHOWN THEREON

LET.	REVISION	DATE	BY
P	17982-9.5 STL RIVETS REM. ADDED -4 & 1-3/32 x 1/8 RIVET	8-2-51	E.M.
A	REDRAWN & REVISED	12-15-50	C.K.

MODEL	PER PLANE	NEXT ASSEMBLY	SUPERSEDES	SUP. BY

PIPER AIRCRAFT CORP.
LOCK HAVEN, PENNA.

BAFFLE ASSEMBLY—ENGINE RIGHT FRONT

C. E. K.	H. R. K.		12749
12-15-50	12-19-50		
DRAFTSMAN	CHECKER	STANDARDS	

A763

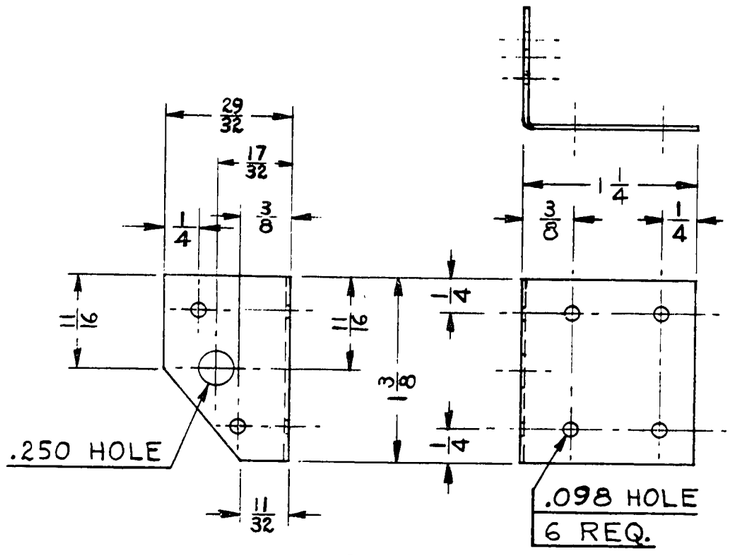

12750-2

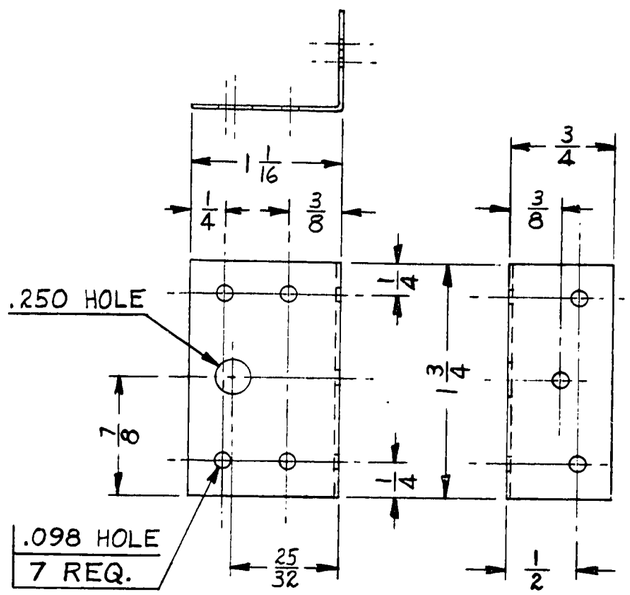

12750-3

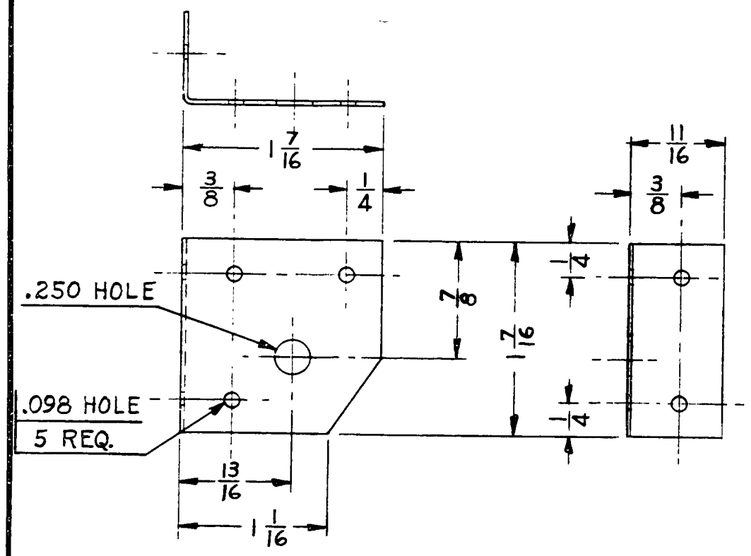

12750-4

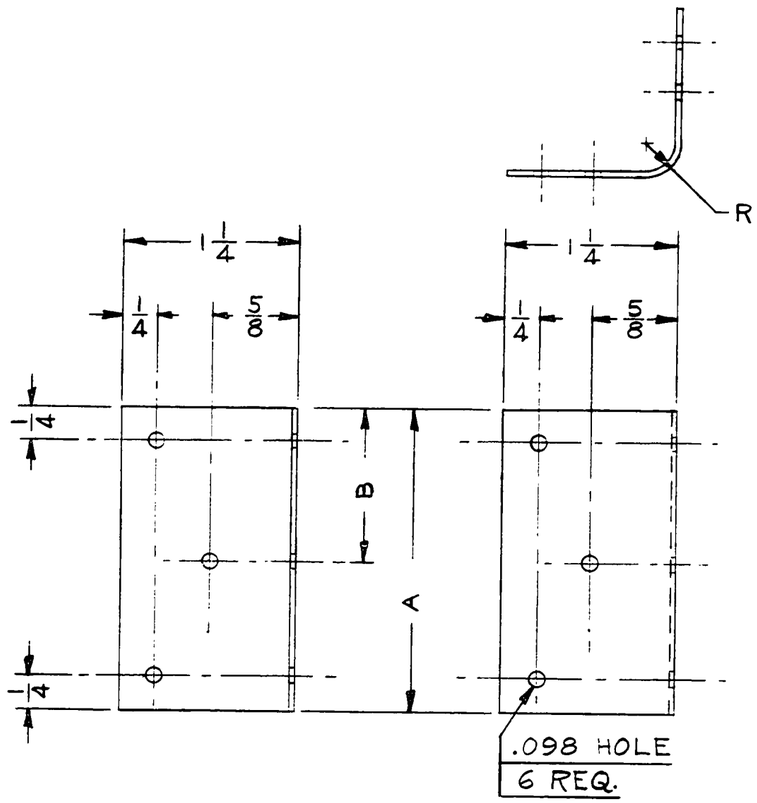

PART NO.	A	B	R
12750-5	2 1/4	1 1/8	1/4
12750-6	2	1	1/32

PART No.	No. REQ.	SIZE	DESCRIPTION / MATERIAL
-6	—	.032×2×2 1/2	3S-1/2 H. ALUM.
-5	—	.032×2 1/4×2 1/2	3S-1/2 H. ALUM.
-4	—	.032×1 7/16×2 1/8	*1025 STEEL
-3	—	.032×1 3/4×1 13/16	*1025 STEEL
-2	—	.032×1 3/8×2 1/8	*1025 STEEL

SCALE FULL SIZE — TOTAL WT.—LBS.

FINISH—PIPER SPECIFICATION #10

MANUFACTURING PRACTICES—PIPER SPECIFICATION #9

LET.	REVISION	DATE	BY
A	-6 ADDED	12-14-50	C.K.

MODEL | PER PLANE | NEXT ASSEMBLY | SUPERSEDES | SUP. BY

THIS DRAWING IS THE PROPERTY OF THE PIPER AIRCRAFT CORP. AND ITS POSSESSION BY UNAUTHORIZED PERSONS SHALL NOT BE CONSTRUED AS PERMISSION TO REPRODUCE FOR SALE, IN WHOLE OR IN PART, ANY DEVICES SHOWN THEREON.

PIPER AIRCRAFT CORP.
LOCK HAVEN, PENNA.

ANGLE-BAFFLE REINFORCEMENT

C. E. K.	J.C.B.		12750
12-1-49	12-14-49		
DRAFTSMAN	CHECKER	STANDARDS	

535

A 535

WAS J3-127

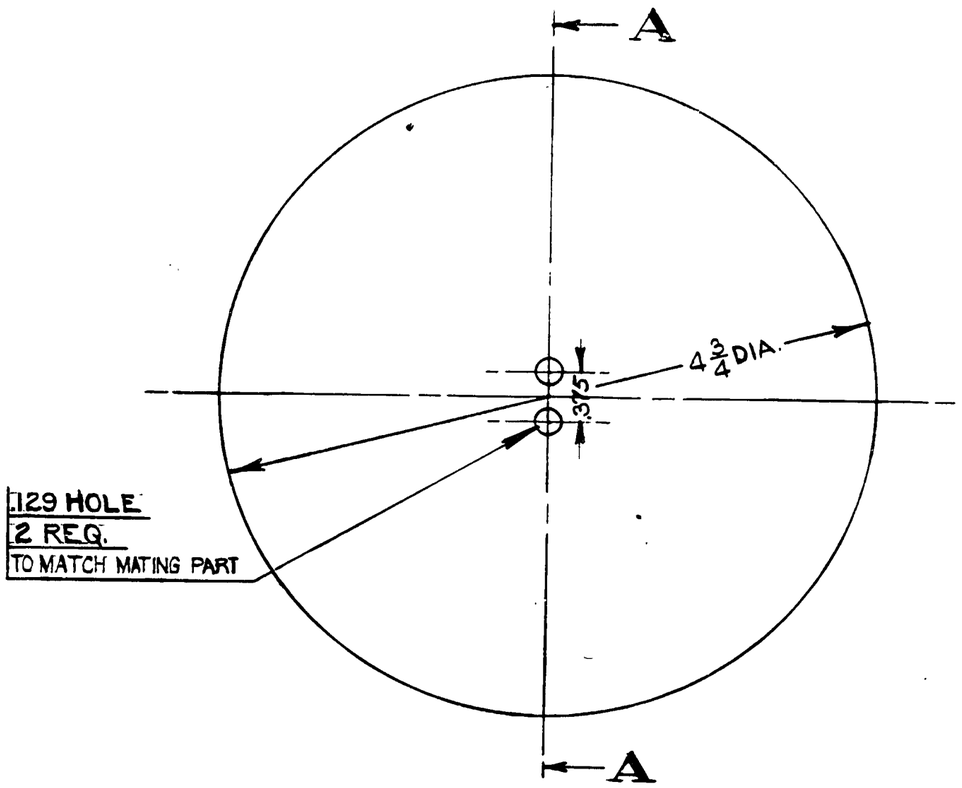

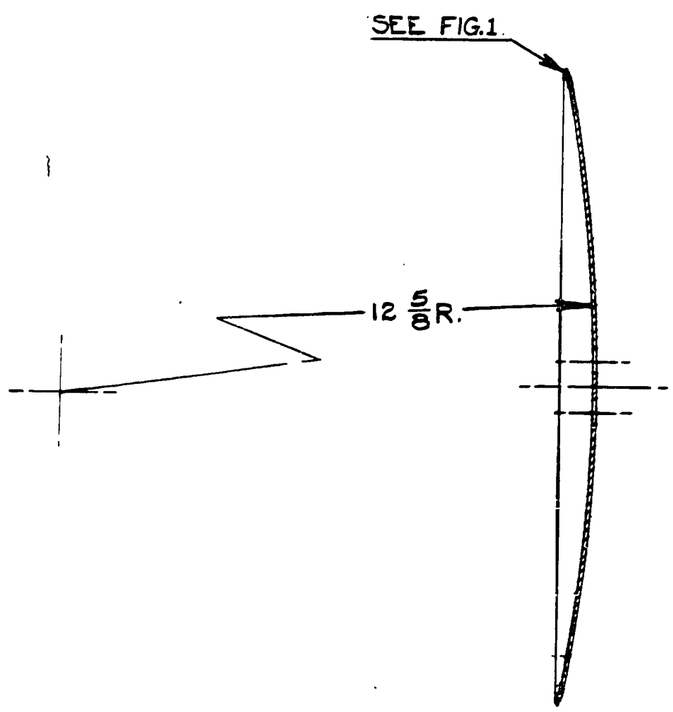

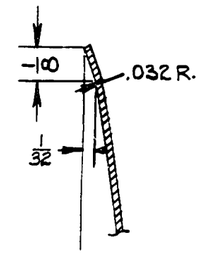

FIG. 1
EDGE DETAIL
TWICE SIZE

SECTION A-A

PART NO.	MODEL	PER SHIP	NEXT ASSEMBLY	REMARKS
12751	J5C	37	12761	
	J3	6		
12751-2	J5C	2	60701	SUPERSEDES 60691

12751 AS SHOWN
12751-2 AS SHOWN
(EXCEPT NOT DRILLED)

LET.	REVISION	DATE	BY
P	J3 NO. PER PLANE 6 WAS 16	6-14-46	HMZ
O	J5C NO. PER PLANE 37 WAS 9	2-13-46	E.L.N.
N	J5C NO. PER PLANE 9 WAS 11	12-19-45	BBC
M	J5C MODEL REF. CAN. FOR-2	11-15-45	E.L.N.
L	REDRAWN AND REVISED	8-27-45	D.A.W.

MODEL	PER PLANE	NEXT ASSEMBLY	SUPERSEDES	SUP. BY
NOTED	NOTED	NOTED		

THIS DRAWING IS THE PROPERTY OF THE PIPER AIRCRAFT CORP. AND ITS POSSESSION BY UNAUTHORIZED PERSONS SHALL NOT BE CONSTRUED AS PERMISSION TO REPRODUCE FOR SALE, IN WHOLE OR IN PART, ANY DEVICES SHOWN THEREON

PIPER AIRCRAFT CORP.
LOCK HAVEN, PENNA.

PART No.	No. REQ.	SIZE	MATERIAL
		.016 x 4 3/4 DIA.	24 ST ALUM.

SCALE FULL SIZE — TOTAL WT.—LBS.
FINISH—PIPER SPECIFICATION #10
MANUFACTURING PRACTICES—PIPER SPECIFICATION #9

PLATE — INSPECTION OPENING COVER

DRAFTSMAN	CHECKER	STANDARDS
D.A.W. 8-27-45	E.E.T. 8-29-45	

12751

536

A536

WAS J3-A131

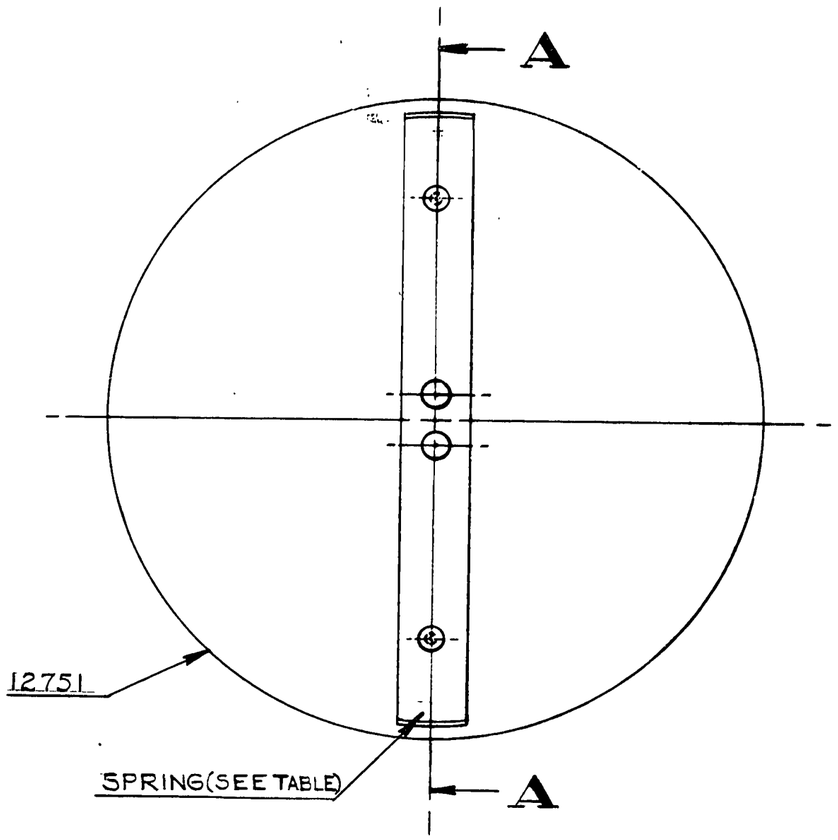

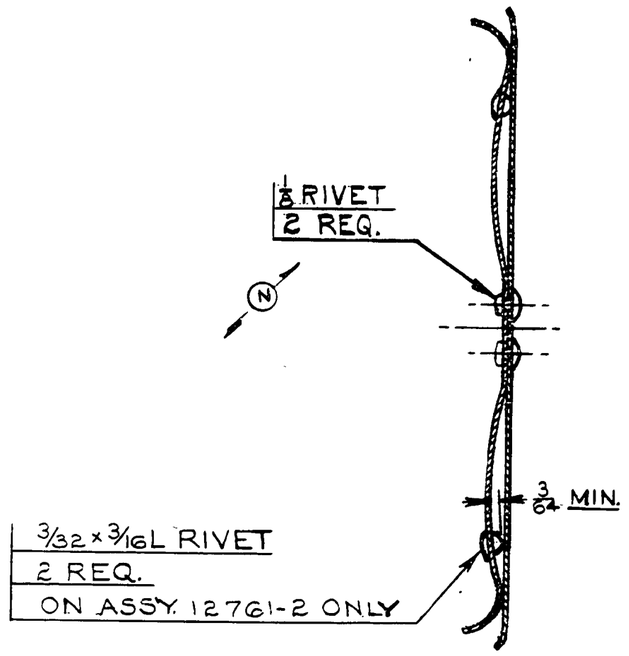

SECTION A-A

PART NO.	SPRING
12761	12741
12761-2	12741-2

M

G J H F

PART No.	No. REQ.	SIZE	DESCRIPTION
	2	3/32 × 3/16 L	2S ALUM. BR. HD RIVET (ON 12761-2 ONLY)
12741-2	1	SPRING (SEE TABLE)	
	2	1/8 × 1/8 LONG	TUBULAR STEEL RIVET
12751	1	PLATE	
12741	1	SPRING (SEE TABLE)	

MATERIAL

SCALE FULL SIZE — TOTAL WT.—LBS.

FINISH—PIPER SPECIFICATION #10

MANUFACTURING PRACTICES—PIPER SPECIFICATION #9

COVER ASSEMBLY—DRAG WIRE INSPECTION

LET.	REVISION	DATE	BY
N	1/8 × 1/8 L TUBULAR STEEL RIVET WAS 1/8 × 1/4 L 2S-O BR. HD. ALUM RIVET	12-13-49	K.D.
M	-2 ADDED.	9-9-48	R.M.
L	J3 NO. PER PLANE 6 WAS 16	6-14-46	HMZ
K	J3 NO. PER PLANE 16 WAS 18	3-28-46	L.R.
J	J5C NO. PER PLANE 37 WAS 10	2-13-46	E.L.N.
H	J5C NO. PER PLANE 10 WAS 9	1-31-46	BC
G	J5C NO. PER PLANE 9 WAS 11	12-19-45	BBC
F	J3 N.A. 24165 ADDED. 18 WAS 16	11-2-45	E.L.N.
E	REDRAWN AND REVISED	8-28-45	D.A.W.

MODEL	PER PLANE	NEXT ASSEMBLY	SUPERSEDES	SUP. BY
J3	6	24165		
		13363, 16243		
J5C	37	83423		

THIS DRAWING IS THE PROPERTY OF THE PIPER AIRCRAFT CORP. AND ITS POSSESSION BY UNAUTHORIZED PERSONS SHALL NOT BE CONSTRUED AS PERMISSION TO REPRODUCE FOR SALE, IN WHOLE OR IN PART, ANY DEVICES SHOWN THEREON

PIPER AIRCRAFT CORP.
LOCK HAVEN, PENNA.

DRAFTSMAN	CHECKER	STANDARDS
D.A.W. 8-28-45	R.E.T. 8-29-45	

12761

537

A 537

This page intentionally left blank.

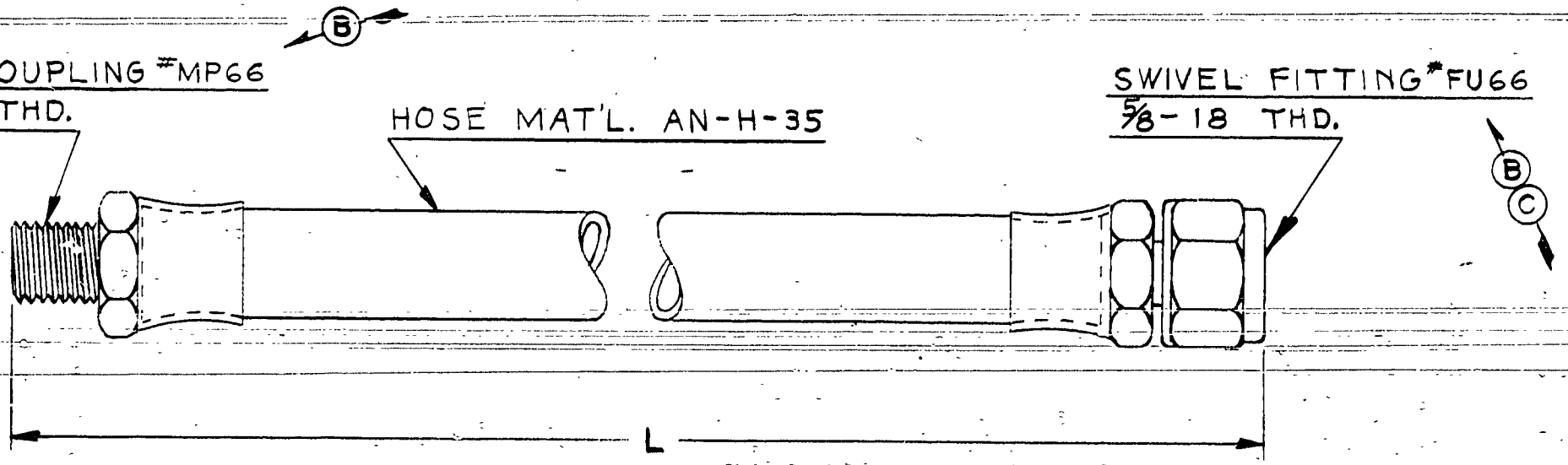

ASSY. NO.	L
12762-2	9 1/2
12762-3	12 1/2
12762-4	16 3/4

NOTES:

A

OPERATING TEMP. 250° F

OPERATING PRESS. 100#/SQ.IN.

TEST PRESS. 1000#/SQ.IN.

PURCHASED FROM RESISTOFLEX CORP.

	1	SOLID COUPLING #MP66
	1	SWIVEL FITTING *FU66
	1	HOSE
PART NO.	No. REQ.	MATERIAL

SCALE FULL SIZE | TOTAL WT.—LBS.

FINISH—PIPER SPECIFICATION #10

MANUFACTURING PRACTICES—PIPER SPECIFICATION #9

HOSE ASSEMBLY

LET.	REVISION	DATE	BY
D	-4 ADDED	8-15-50	C.K.
C	*FU66 WAS *1U66	3-2-50	C.K.
B	PART NOS. ADDED FOR END FTGS	1-17-50	C.K.
A	NOTES ADDED	12-20-49	M.G.

MODEL	PER PLANE	NEXT ASSEMBLY	SUPERSEDES	SUP. BY

THIS DRAWING IS THE PROPERTY OF THE PIPER AIRCRAFT CORP. AND ITS POSSESSION BY UNAUTHORIZED PERSONS SHALL NOT BE CONSTRUED AS PERMISSION TO REPRODUCE FOR SALE, IN WHOLE OR IN PART. ANY DEVICES SHOWN THEREON.

PIPER AIRCRAFT CORP.
LOCK HAVEN, PENNA.

DRAFTSMAN	CHECKER	STANDARDS
C. E. K. 12-12-49	J.C.B. 12-14-49	

12762

A134

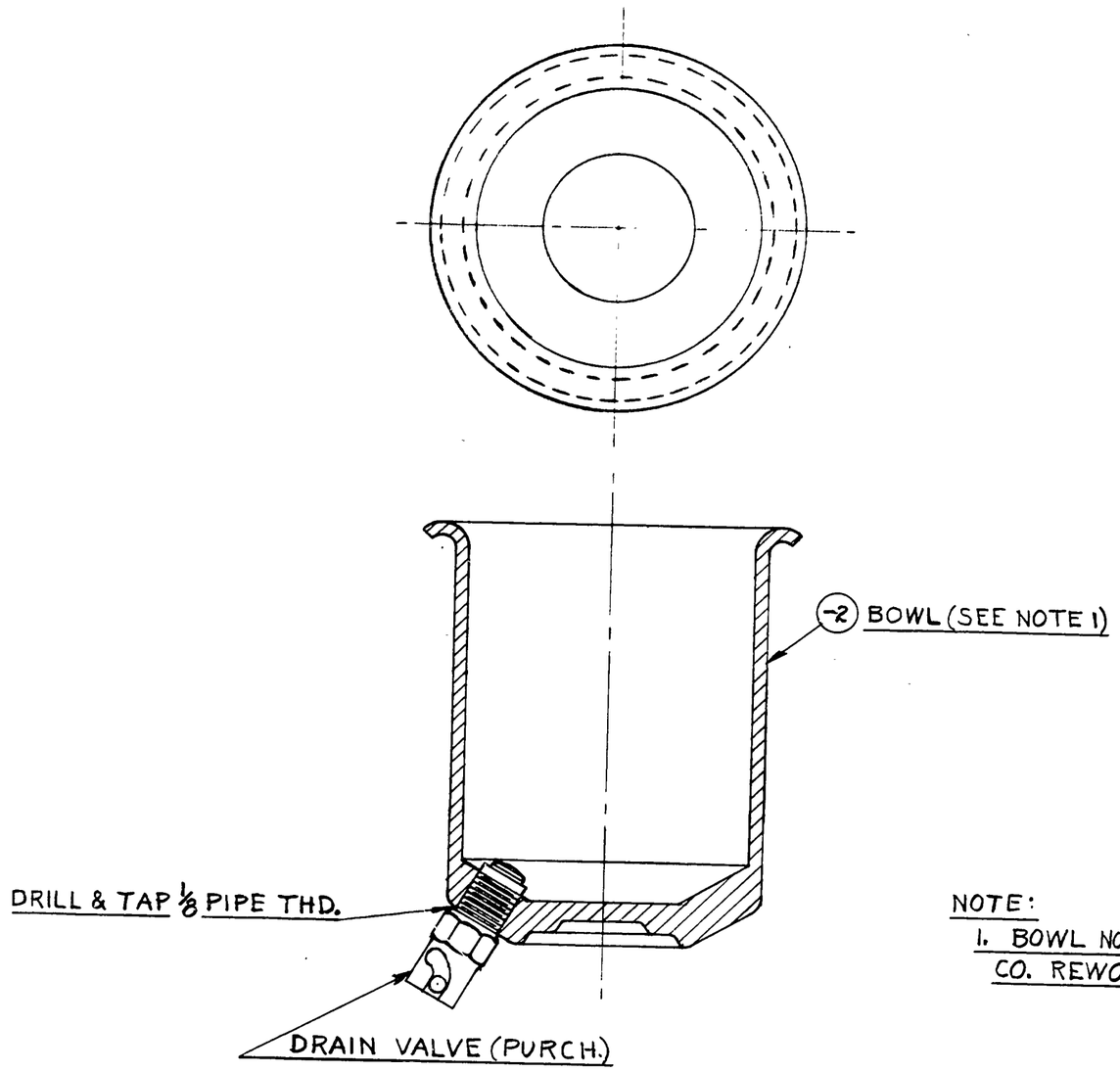

NOTE:

1. BOWL NO. 7P PURCH. KEM MANUFACTURING CO. REWORKED AS SHOWN.

PART No.	No. REQ.	MATERIAL
	1	DRAIN VALVE #CCA-1550 PURCH. CURTIS AUTOMOTIVE DEVICES, INC.
-2	1	BOWL (SEE NOTE 1)

SCALE — TOTAL WT.—LBS.

FINISH—PIPER SPECIFICATION #10

MANUFACTURING PRACTICES—PIPER SPECIFICATION #9

BOWL ASSEMBLY—
FUEL STRAINER

LET.	REVISION	DATE	BY

MODEL	PER PLANE	NEXT ASSEMBLY	SUPERSEDES	SUP. BY

THIS DRAWING IS THE PROPERTY OF THE PIPER AIRCRAFT CORP. AND ITS POSSESSION BY UNAUTHORIZED PERSONS SHALL NOT BE CONSTRUED AS PERMISSION TO REPRODUCE FOR SALE, IN WHOLE OR IN PART, ANY DEVICES SHOWN THEREON.

PIPER AIRCRAFT CORP.
LOCK HAVEN, PENNA.

C. E. K.	J. C. B.		
12-12-49	12-16-49		12764
DRAFTSMAN	CHECKER	STANDARDS	

538

A538

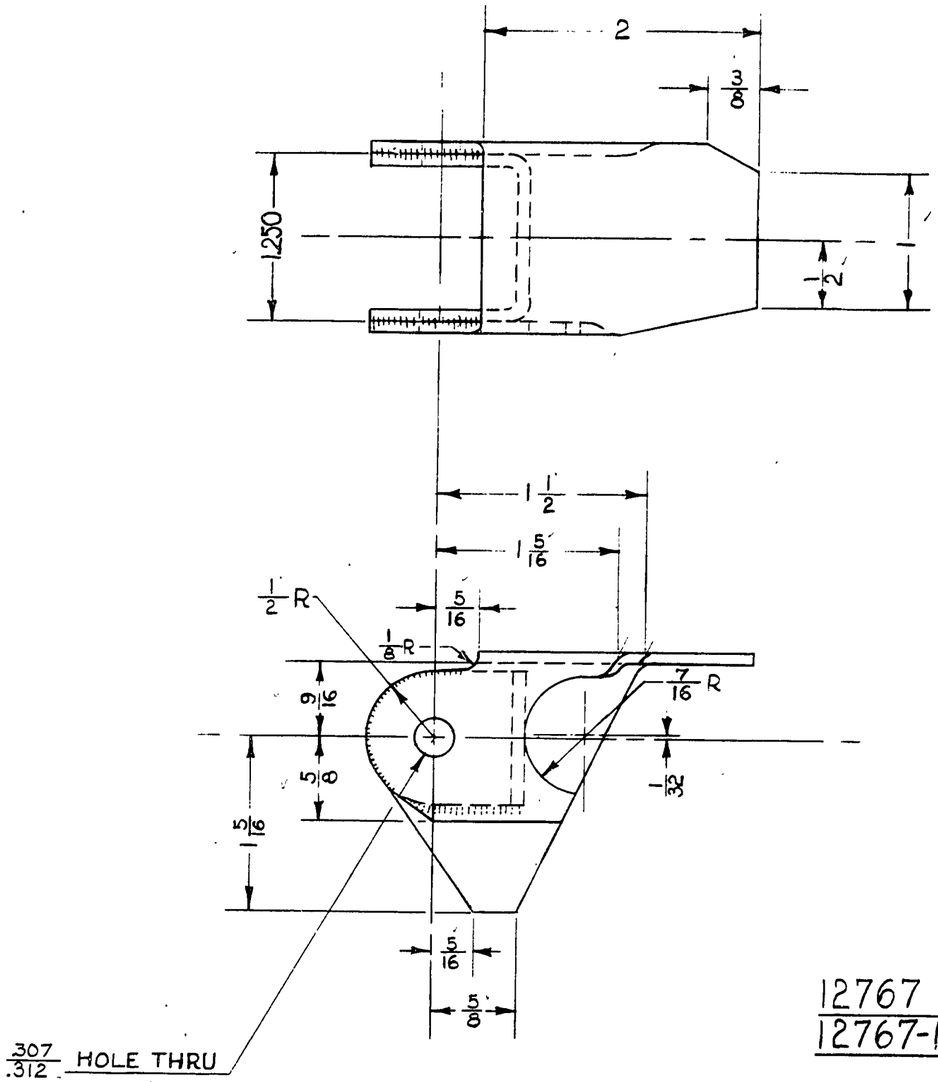

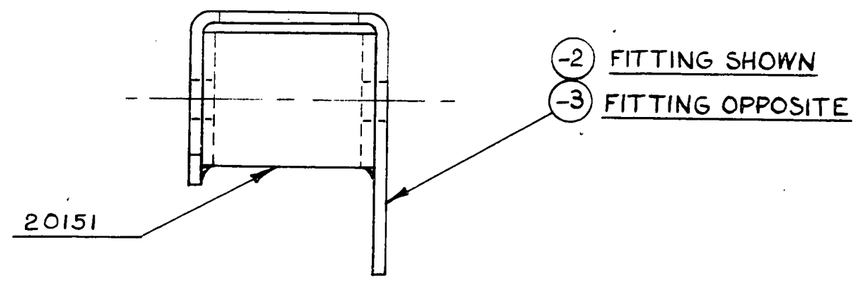

12767 L.H. ASSY. SHOWN
12767-1 R.H. ASSY. OPPOSITE

PART NO.	No. REQ.	SIZE	DESCRIPTION
		MATERIAL	
20151	1	"U" FITTING	
-3	1	.095 x 2 13/16 x 4 11/16	#1025 STEEL
-2			

SCALE FULL SIZE — TOTAL WT.–LBS.

FINISH–PIPER SPECIFICATION #10

MANUFACTURING PRACTICES–PIPER SPECIFICATION #9

FITTING ASSEMBLY-FUSELAGE
FRONT WING HINGE

MODEL	PER PLANE	NEXT ASSEMBLY	SUPERSEDES	SUP. BY

THIS DRAWING IS THE PROPERTY OF THE PIPER AIRCRAFT CORP. AND ITS POSSESSION BY UNAUTHORIZED PERSONS SHALL NOT BE CONSTRUED AS PERMISSION TO REPRODUCE FOR SALE, IN WHOLE OR IN PART. ANY DEVICES SHOWN THEREON.

LET.	REVISION	DATE	BY

PIPER AIRCRAFT CORP.
LOCK HAVEN, PENNA.

K.D.D.	C.E.K.		12767
12-19-49	12-20-49		
DRAFTSMAN	CHECKER	STANDARDS	

12767 539

A 539

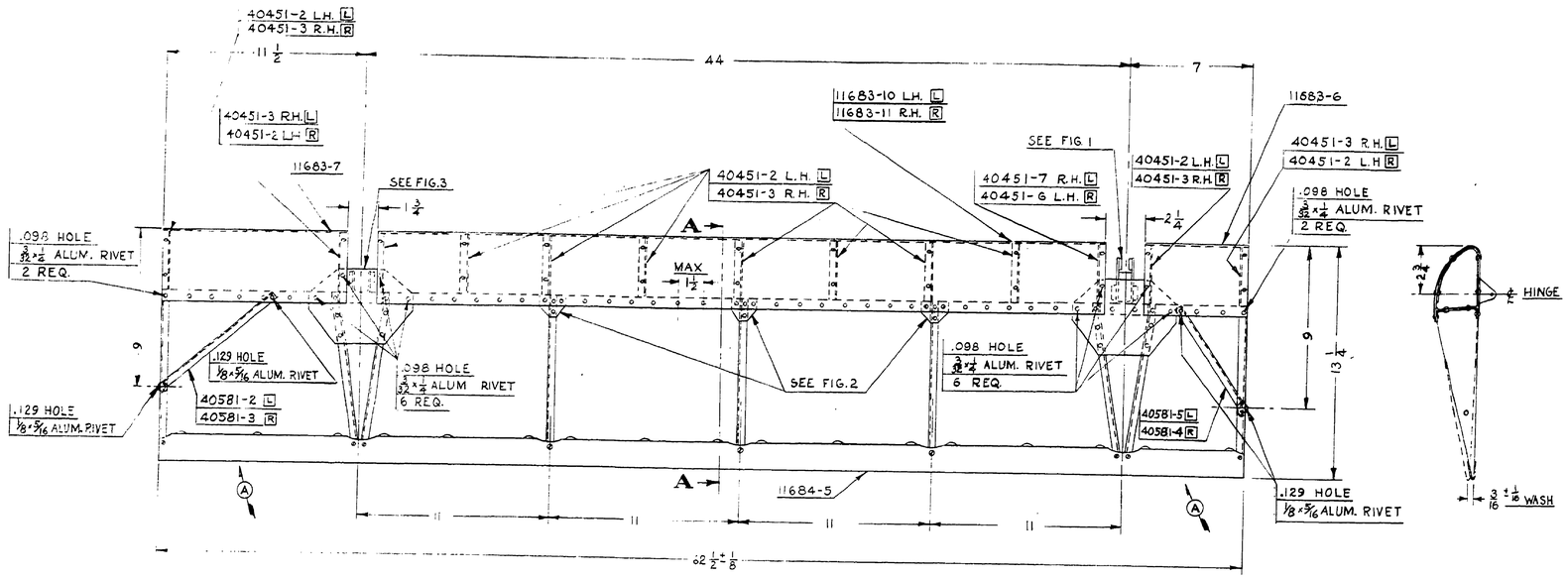

FIG. 2
FULL SIZE

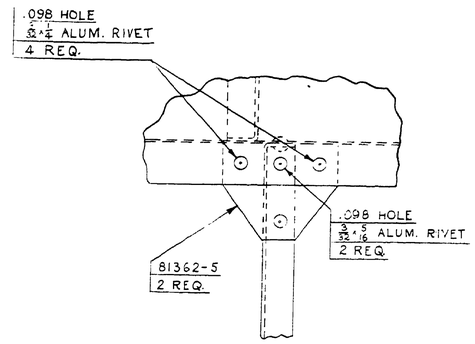

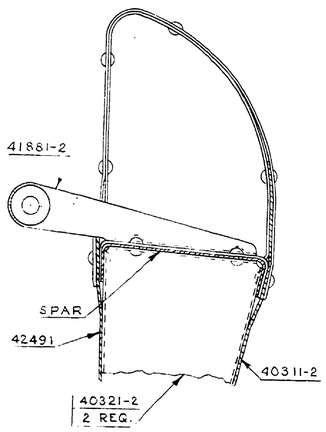

SECTION B-B
FULL SIZE

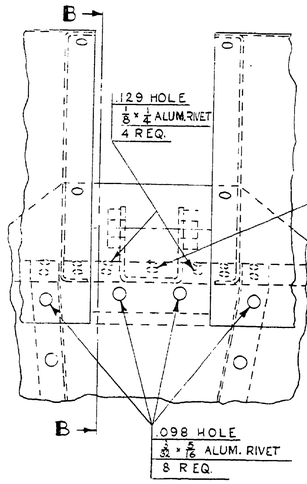

DETAIL AT OUTBOARD HINGE
FIG. 3
FULL SIZE

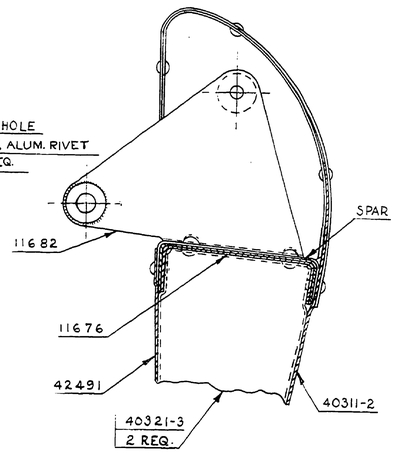

SECTION C-C
FULL SIZE

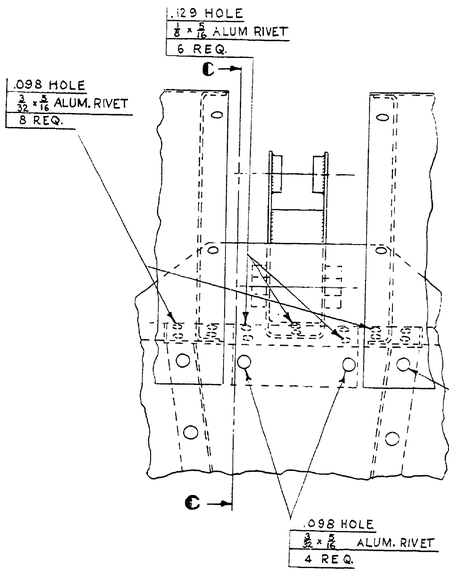

DETAIL AT INBOARD HINGE
FIG. 1
FULL SIZE

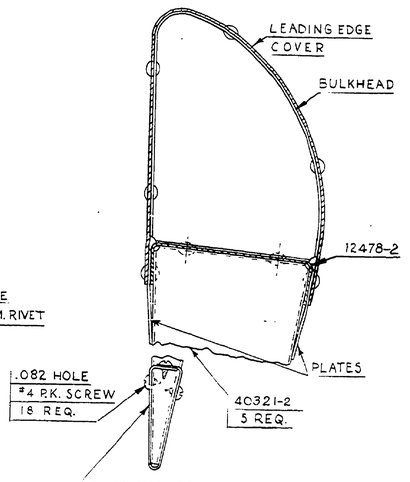

TRAILING EDGE ATTACHED WITH
2 PARKER SCREWS IN EACH RIB
AS SHOWN.

SECTION A-A
TYPICAL CROSS SECTION
FULL SIZE

NOTES:
1. PARTS MARKED [L] USED ON LEFT ASSY. ONLY. PARTS MARKED [R] USED ON RIGHT ASSY. ONLY.
2. ALL RIVETS SPACED APPROX. AS SHOWN.
3. UNLESS OTHERWISE NOTED ALL RIVETS ARE 3/32 x 3/16 2S ALUM. (.098 HOLE)
4. ALL BULKHEAD FLANGES SHALL FACE OUTBOARD EXCEPT AT FLAP ENDS AND CUTOUTS. CORRESPONDING RIBS SHALL FACE INBOARD.
5. ALL PARTS TO THIS ASSY. MUST BE INSTALLED SO THAT NO SHARP EDGES, CORNERS OR BULGES SHALL PROTRUDE BEYOND THE FABRIC LINE.
6. FLAP HINGE CENTERS MUST COINCIDE WITH CENTERS OF RELATED PARTS ON WING ASSY.

12768 SHOWN
12768-1 OPPOSITE

LET.	REVISION	DATE	BY
A	40581-2 40581-3 40581-4 & 40581-5 & ATTACH. ADDED	2 2 50	C.K.

MODEL PER PLANE | NEXT ASSEMBLY | SUPERSEDES | SUP. BY

THIS DRAWING IS THE PROPERTY OF THE PIPER AIRCRAFT CORP. AND ITS POSSESSION BY UNAUTHORIZED PERSONS SHALL NOT BE CONSTRUED AS PERMISSION TO REPRODUCE FOR SALE, IN WHOLE OR IN PART, ANY DEVICES SHOWN THEREON.

PIPER AIRCRAFT CORP.
LOCK HAVEN, PENNA.

No. REQ.	SIZE	DESCRIPTION
PART No.		MATERIAL
SCALE 3 IN. = 1 FT.	NOTED	TOTAL WT.-LBS.

FINISH—PIPER SPECIFICATION #10
MANUFACTURING PRACTICES—PIPER SPECIFICATION #9

40581-5	1	BRACE
40581-4		
40581-3	1	
40581-2		
	12	1/8 x 5/16
	4	1/8 x 1/4
	4	3/32 x 3/8 BRAZIER HEAD 2S
	26	3/32 x 5/16 ALUM. RIVETS
	28	3/32 x 1/4
	130	3/32 x 3/16
#4	18	1/4 L. TYPE "A" STOVE HD. P.K. SCR.
81362-5	6	PLATE
42491	2	REINF. PLATE
41881-2	1	HINGE ASSY.
40451-7	1	BULKHEAD
40451-6		
40451-3	2 [L] 10 [R]	
40451-2	10 [L] 2 [R]	
40321-3	2	RIB
40321-2	7	
40311-2	2	PLATE
12478-2	1	SPAR
11684-5	1	TRAILING EDGE ASSY.
11683-11	1	LEADING EDGE COVER
11683-10		
11683-7	1	
11683-6	1	
11682	1	HINGE ASSY.
11676	1	PLATE

FLAP ASSEMBLY

DRAFTSMAN	CHECKER	STANDARDS
K.D.D. 12-27-49	C.E.K. 12-27-49	

12768

Philadelphia Blue Print Co. 150 8-48

A865

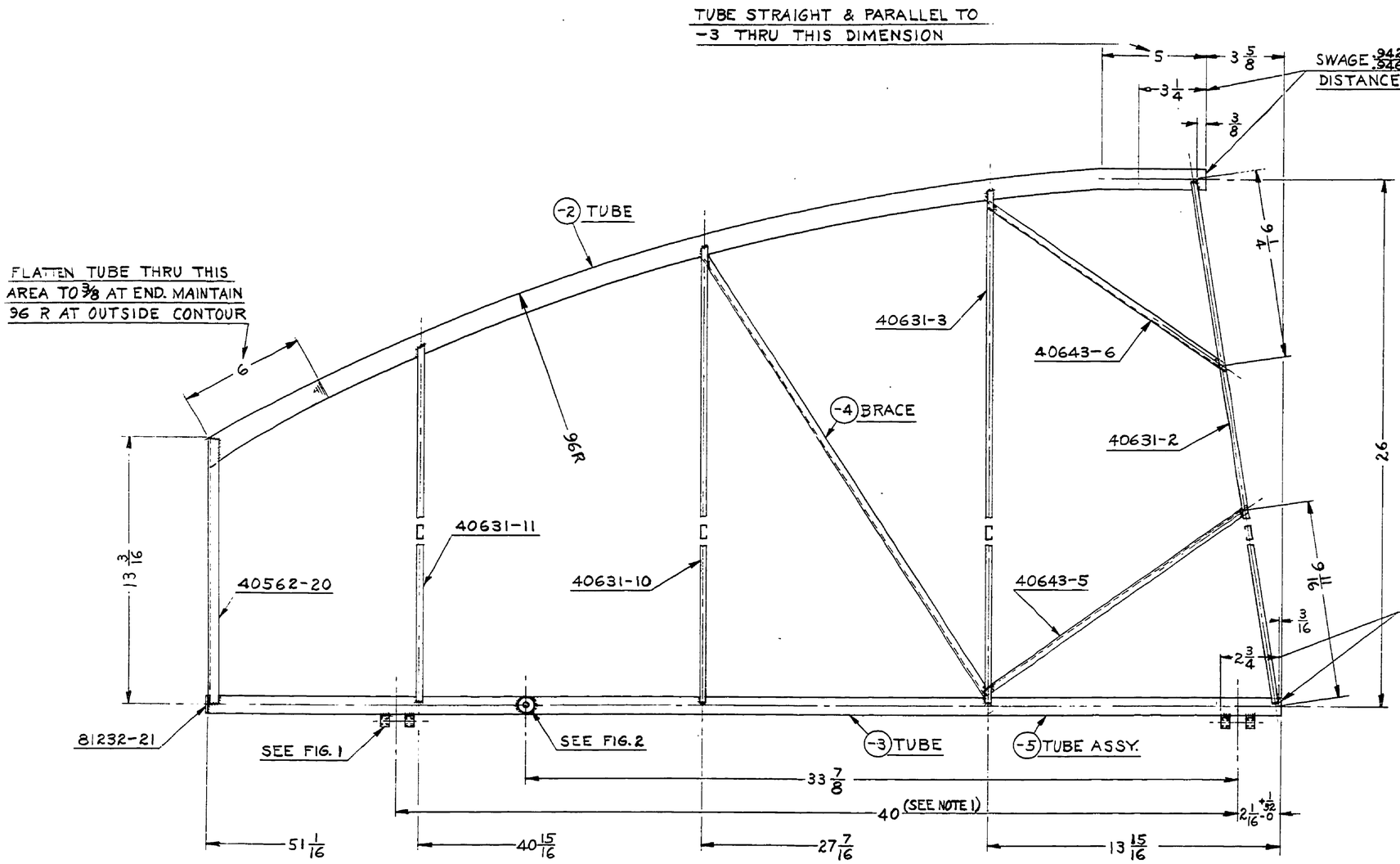

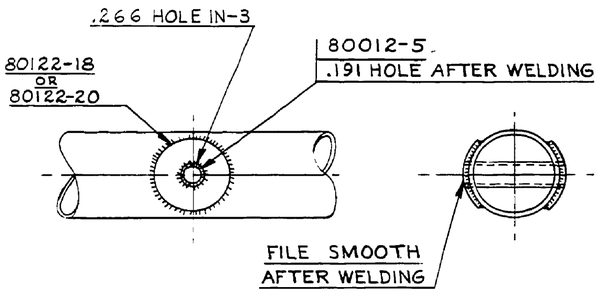

FIG. 2
TIE ROD FITTING DETAIL
FULL SIZE

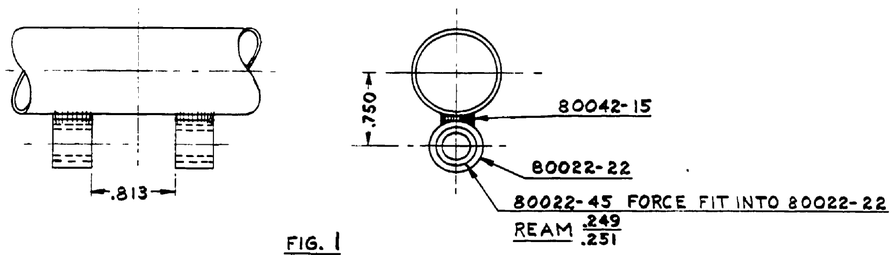

FIG. 1
HINGE DETAIL
FULL SIZE

NOTE:
1. HINGE CENTERS TO COINCIDE WITH THOSE ON ELEVATOR.

PART NO.	REF.	DESCRIPTION
84501-2	REF.	CHANNEL SECTION
81232-21	1	DISC
80122-18 OR 80122-20	2	WASHER
80042-15	4	PLATE
80022-45	4	BUSHING
80022-22	4	
80012-5	1	
40643-6	1	BRACE
40643-5	1	
40631-11	1	RIB
40631-10	1	
40631-3	1	
40631-2	1	
40562-20	1	
-5	—	TUBE ASSY. CONSISTS OF 1 EA. OF -3 & 80012-5; 2 OF 80122-18 OR 80122-20
-4	1	25½ LONG PIPER SECTION 84501-2
-3	1	7/8×.049×51 1/16 #1025 STL. TUBE
-2	1	1"×.028×50½ #4130 STL. SEAMLESS TUBE
PART NO.	NO. REQ.	SIZE / DESCRIPTION / MATERIAL

SCALE 3 IN. = 1 FT. & NOTED — TOTAL WT.-LBS.
FINISH—PIPER SPECIFICATION #10
MANUFACTURING PRACTICES—PIPER SPECIFICATION #9

THIS DRAWING IS THE PROPERTY OF THE PIPER AIRCRAFT CORP. AND ITS POSSESSION BY UNAUTHORIZED PERSONS SHALL NOT BE CONSTRUED AS PERMISSION TO REPRODUCE FOR SALE, IN WHOLE OR IN PART, ANY DEVICES SHOWN THEREON

LET.	REVISION	DATE	BY

MODEL	PER PLANE	NEXT ASSEMBLY	SUPERSEDES	SUP. BY

PIPER AIRCRAFT CORP.
LOCK HAVEN, PENNA.

STABILIZER ASSEMBLY

C. E. K.	J. C. B.		12769
12-23-49	12-27-49		
DRAFTSMAN	CHECKER	STANDARDS	

764

A764

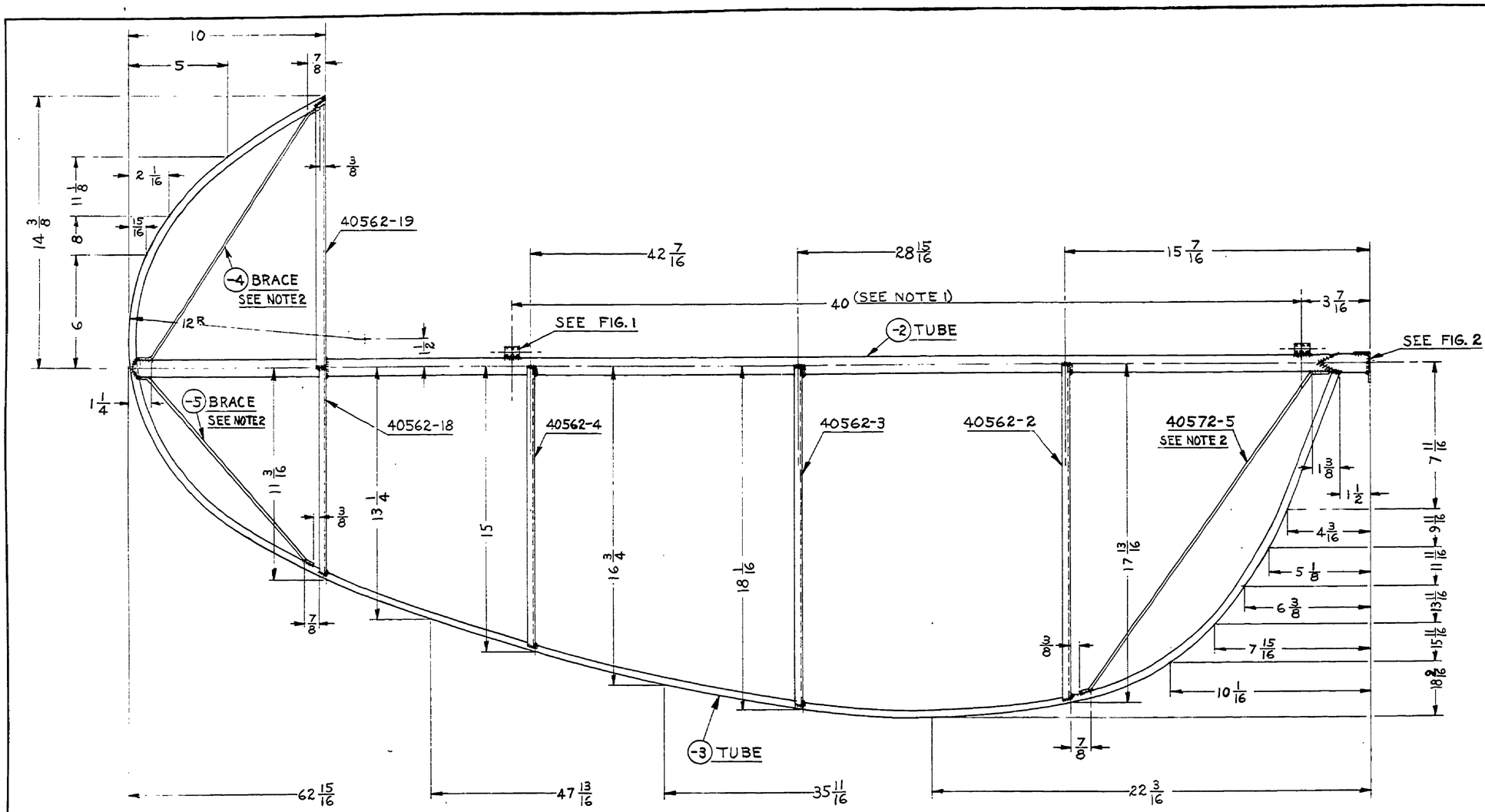

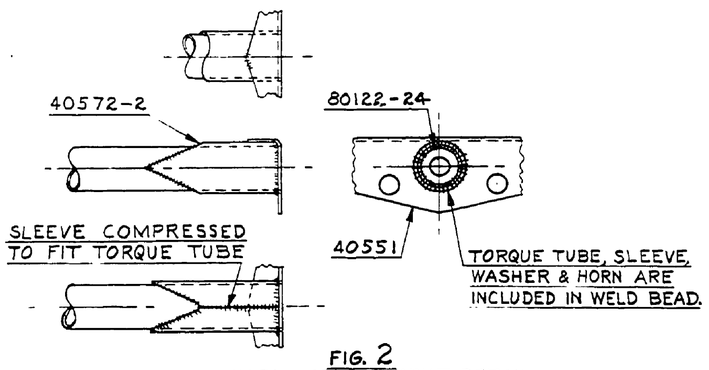

FIG. 2
HORN ATTACHMENT DETAIL
6 IN. = 1 FT.

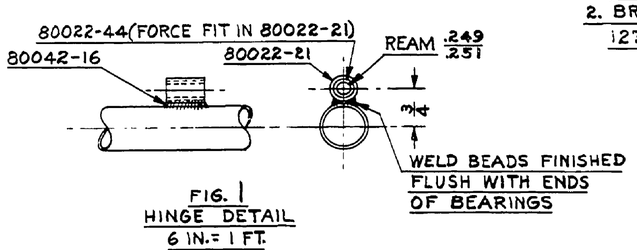

FIG. 1
HINGE DETAIL
6 IN. = 1 FT.

NOTE:
1. HINGE CENTERS TO COINCIDE WITH THOSE ON STABILIZER.
2. BRACES 40572-5, 12770-4 & 12770-5 SHALL BE TAUT

PART No.	NO. REQ.	SIZE	DESCRIPTION MATERIAL
80122-24	1	WASHER	
80042-16	2	PLATE	
80022-44	2	BUSHING	
80022-21	2		
40572-5	1	BRACE	
40572-2	1	SLEEVE	
40562-19	1	RIB	
40562-18	1		
40562-4	1		
40562-3	1		
40562-2	1		
40551	1	HORN	
-5	1	3/32 × 13 1/4	#1010 C.F. STL. WIRE
-4	1	3/32 × 16 1/2	
-3	1	3/8 × .028 × 97	#1025 STL. TUBE
-2	1	1/8 × .049 × 63	#1025 STL. TUBE

SCALE 3 IN. = 1 FT. & NOTED — TOTAL WT.-LBS.
FINISH-PIPER SPECIFICATION #10
MANUFACTURING PRACTICES-PIPER SPECIFICATION #9

THIS DRAWING IS THE PROPERTY OF THE PIPER AIRCRAFT CORP. AND ITS POSSESSION BY UNAUTHORIZED PERSONS SHALL NOT BE CONSTRUED AS PERMISSION TO REPRODUCE FOR SALE, IN WHOLE OR IN PART, ANY DEVICES SHOWN THEREON

LET.	REVISION	DATE	BY

MODEL	PER PLANE	NEXT ASSEMBLY	SUPERSEDES	SUP. BY

PIPER AIRCRAFT CORP.
LOCK HAVEN, PENNA.

ELEVATOR ASSEMBLY

C. E. K.	J. C. B.		12770
12-23-49	12-27-49		
DRAFTSMAN	CHECKER	STANDARDS	

A765

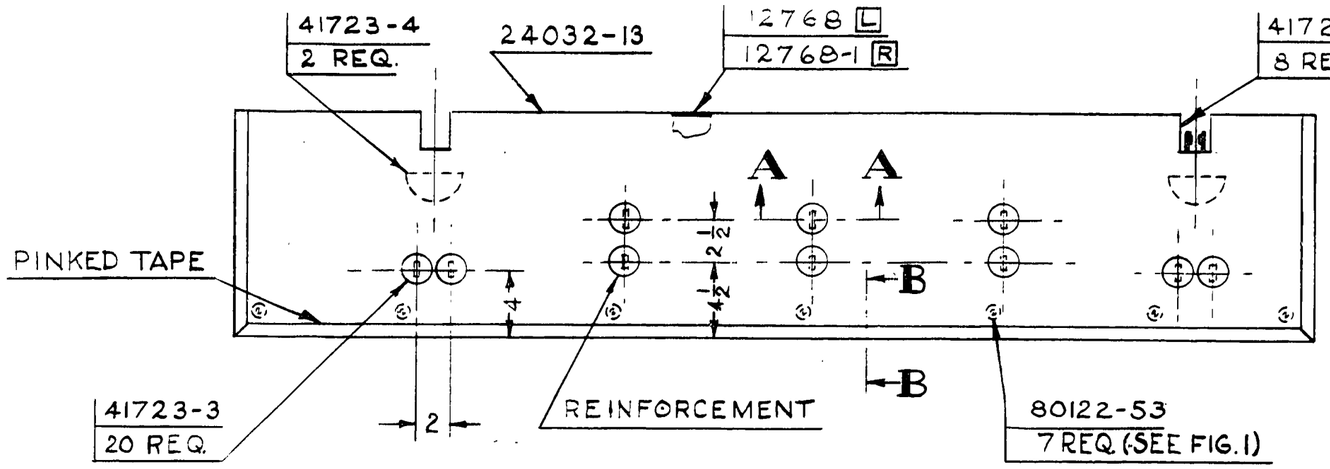

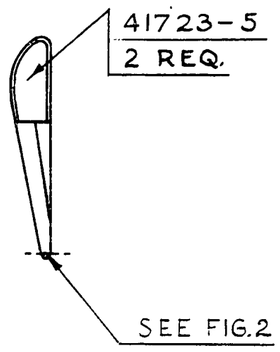

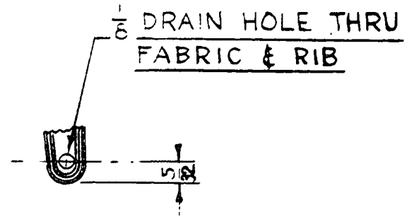

FIG. 2
DRAIN HOLE DETAIL
FULL SIZE

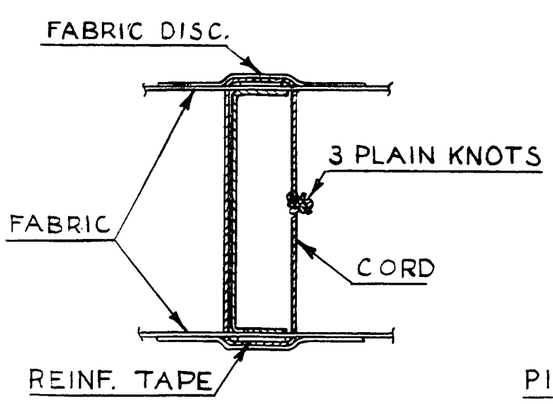

SECTION A-A
FULL SIZE

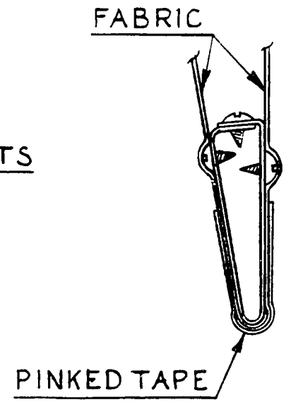

SECTION B-B
FULL SIZE

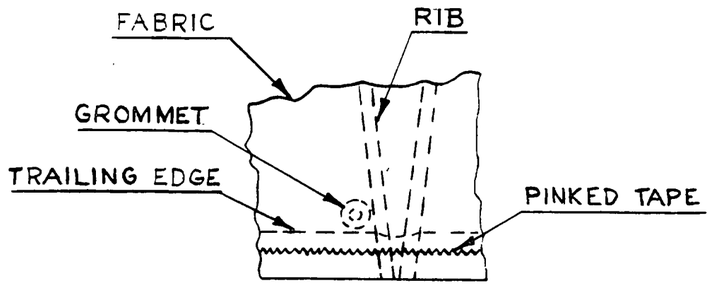

FIG. 1
DRAIN GROMMET INST.
3 IN. = 1 FT.

12773 L.H. SHOWN
12773-1 R.H. OPPOSITE

NOTES:
FABRIC & TAPE DOPED TO FRAME AS SHOWN
PARTS MARKED [L] USED ON LEFT ASSY. ONLY.
PARTS MARKED [R] USED ON RIGHT ASSY. ONLY.

PART NO.	NO. REQ.	SIZE	DESCRIPTION / MATERIAL
	20	3/8 x 3/4	COTTON HERRINGBONE WEAVE TAPE
	10	7 IN. L.	BARBOURS #7 STITCH. CORD
	1	2 x 125	PINKED TAPE SAE SPEC. AMS 3806
80122-53	7		GROMMET
41723-6	8		BULKHEAD COVER
41723-5	2		END COVER
41723-4	2		FABRIC HALF DISC
41723-3	20		FABRIC DISC
24032-13	1		FABRIC
12768-1 / 12768	1		FLAP ASSY.

SCALE 1 1/2 IN. = 1 FT. & NOTED — TOTAL WT.—LBS.
FINISH—PIPER SPECIFICATION #10
MANUFACTURING PRACTICES—PIPER SPECIFICATION #9

LET.	REVISION	DATE	BY

MODEL	PER PLANE	NEXT ASSEMBLY	SUPERSEDES	SUP. BY

THIS DRAWING IS THE PROPERTY OF THE PIPER AIRCRAFT CORP. AND ITS POSSESSION BY UNAUTHORIZED PERSONS SHALL NOT BE CONSTRUED AS PERMISSION TO REPRODUCE FOR SALE, IN WHOLE OR IN PART, ANY DEVICES SHOWN THEREON.

PIPER AIRCRAFT CORP.
LOCK HAVEN, PENNA.

FLAP ASSEMBLY- COVERED

K. D. D.	C. E. K.		12773
12-28-49	1-5-50		
DRAFTSMAN	CHECKER	STANDARDS	

12773 540

A540

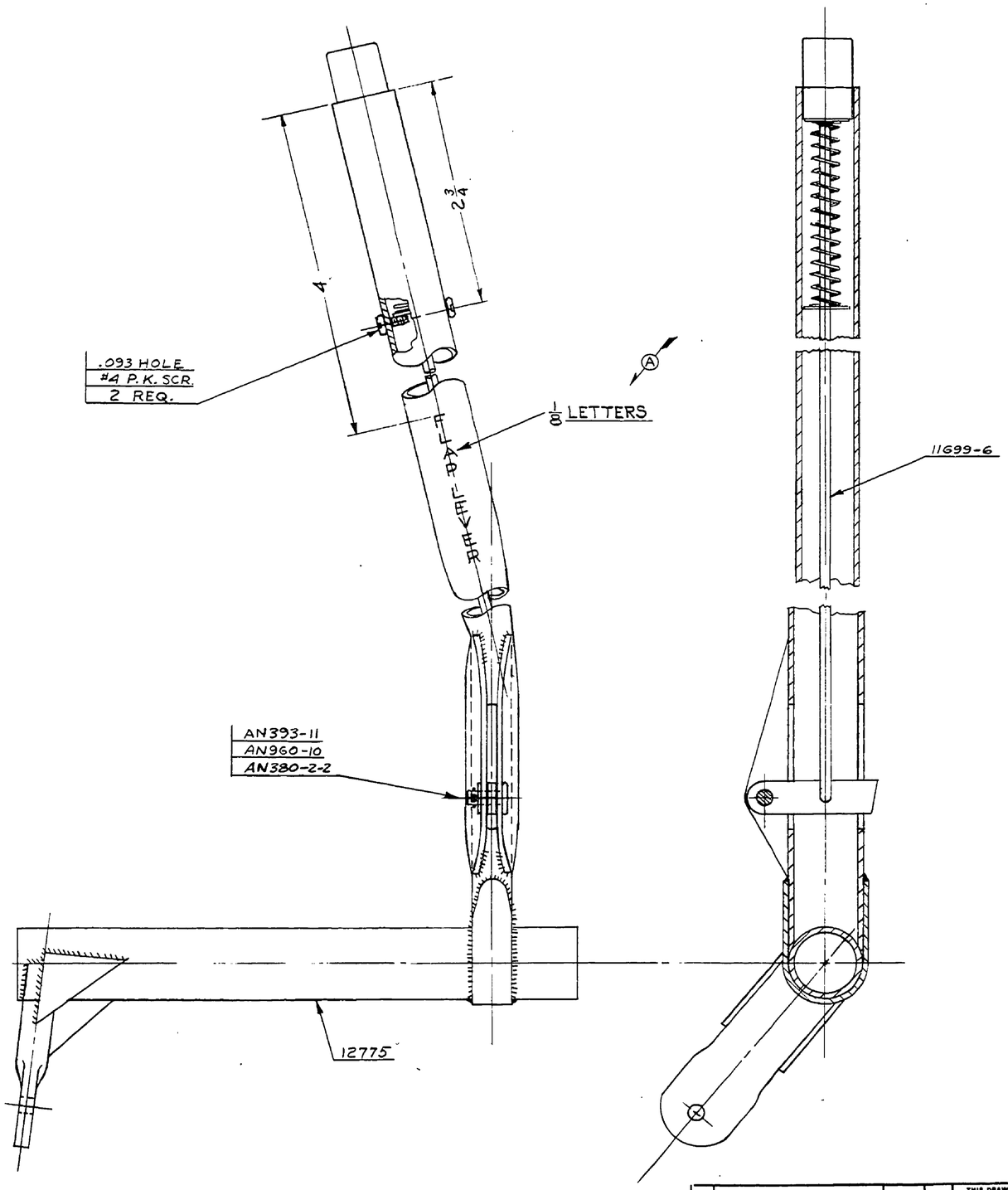

#4	2	1/4 L TYPE "Z" RD. HD. P.K. SCREW
AN960-10	1	WASHER
AN393-11	1	PIN
AN380-2-2	1	COTTER PIN
11699-6	1	PLUNGER ASSEMBLY
12775	1	LEVER ASSEMBLY
PART NO.	NO. REQ.	SIZE DESCRIPTION MATERIAL

SCALE FULL SIZE — TOTAL WT.—LBS.

FINISH—PIPER SPECIFICATION #10

MANUFACTURING PRACTICES—PIPER SPECIFICATION #9

THIS DRAWING IS THE PROPERTY OF THE PIPER AIRCRAFT CORP. AND ITS POSSESSION BY UNAUTHORIZED PERSONS SHALL NOT BE CONSTRUED AS PERMISSION TO REPRODUCE FOR SALE, IN WHOLE OR IN PART, ANY DEVICES SHOWN THEREON

MODEL	PER PLANE	NEXT ASSEMBLY	SUPERSEDES	SUP. BY

LET.	REVISION	DATE	BY
A	STENCIL WAS 11723	6-27-50	HRK

PIPER AIRCRAFT CORP.
LOCK HAVEN, PENNA.

LEVER ASSEMBLY—
FLAP CONTROL (COMPLETE)

J.S.O.	H.R.K.		12774
12-29-49	1-5-50		
DRAFTSMAN	CHECKER	STANDARDS	

766

A766

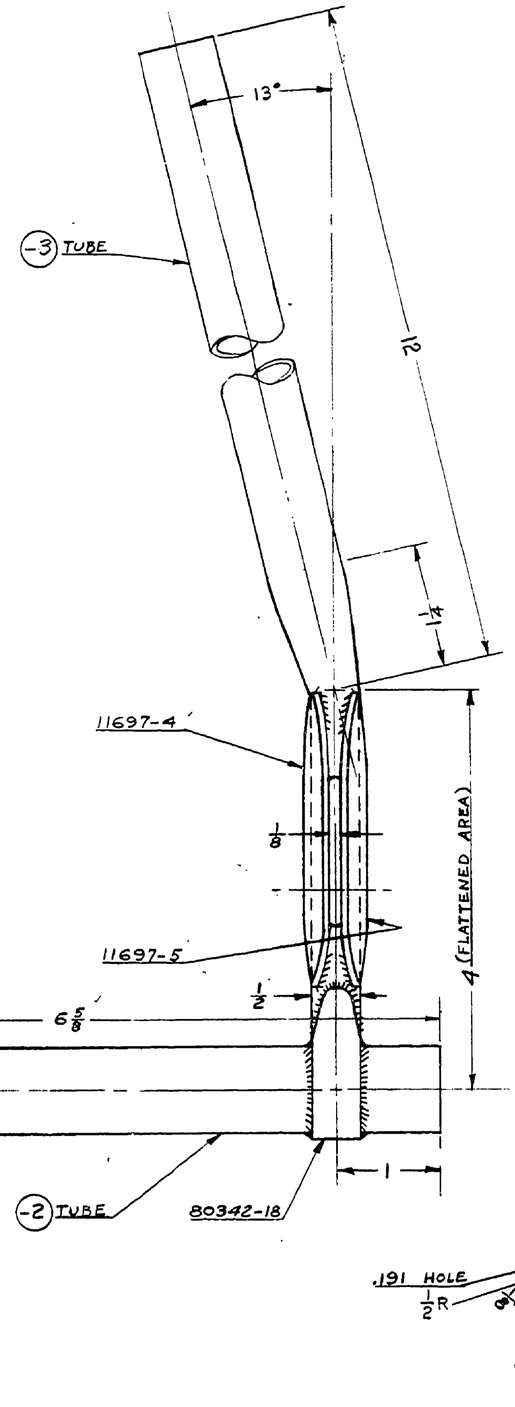

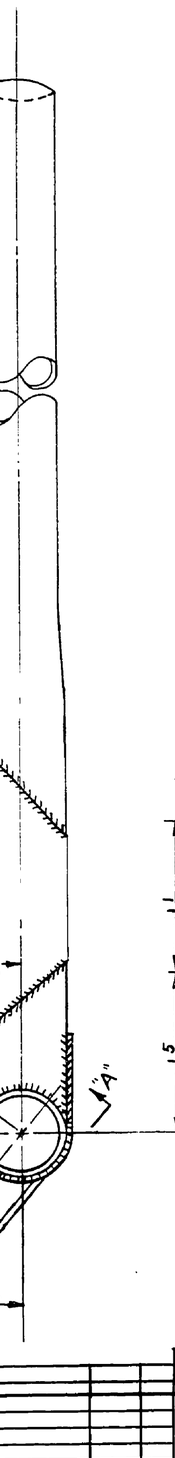

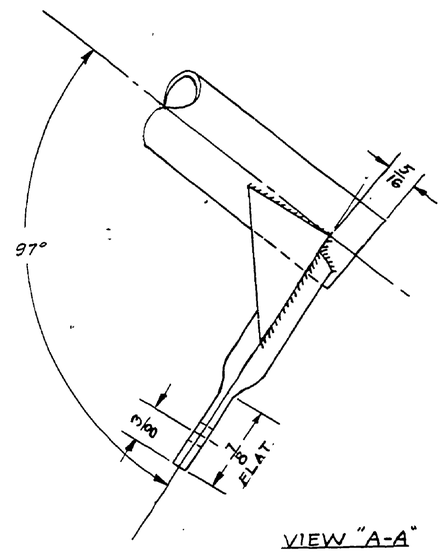

VIEW "A-A"

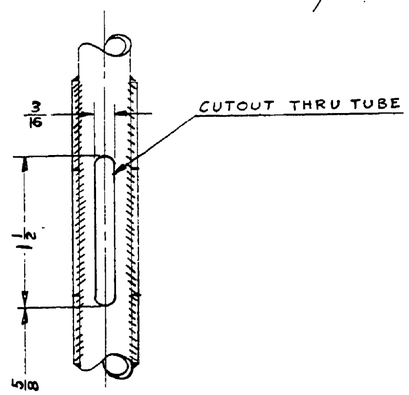

PART No.	NO. REQ.	SIZE	DESCRIPTION
80342-18	1	STRAP	
11994-7	2	GUSSET	
11697-5	1	PLATE	
11697-4	1	PLATE	
-4	1	5/8 X .035 X 2 7/16	#1025 STL. TUBE
-3	1	3/4 X .049 X 16 5/8	#4130 S.S.T.
-2	1	7/8 X .049 X 6 5/8	#1025 STL. TUBE

MATERIAL

SCALE FULL SIZE | TOTAL WT.-LBS.

FINISH—PIPER SPECIFICATION #10

MANUFACTURING PRACTICES—PIPER SPECIFICATION #9

THIS DRAWING IS THE PROPERTY OF THE PIPER AIRCRAFT CORP. AND ITS POSSESSION BY UNAUTHORIZED PERSONS SHALL NOT BE CONSTRUED AS PERMISSION TO REPRODUCE FOR SALE, IN WHOLE OR IN PART, ANY DEVICES SHOWN THEREON.

LET.	REVISION	DATE	BY

MODEL	PER PLANE	NEXT ASSEMBLY	SUPERSEDES	SUP. BY

PIPER AIRCRAFT CORP.
LOCK HAVEN, PENNA.

LEVER ASSEMBLY- FLAP CONTROL

DRAFTSMAN	CHECKER	STANDARDS	
J.S.O. 12-28-49	H.R.K. 1-5-49		12775

767

A767

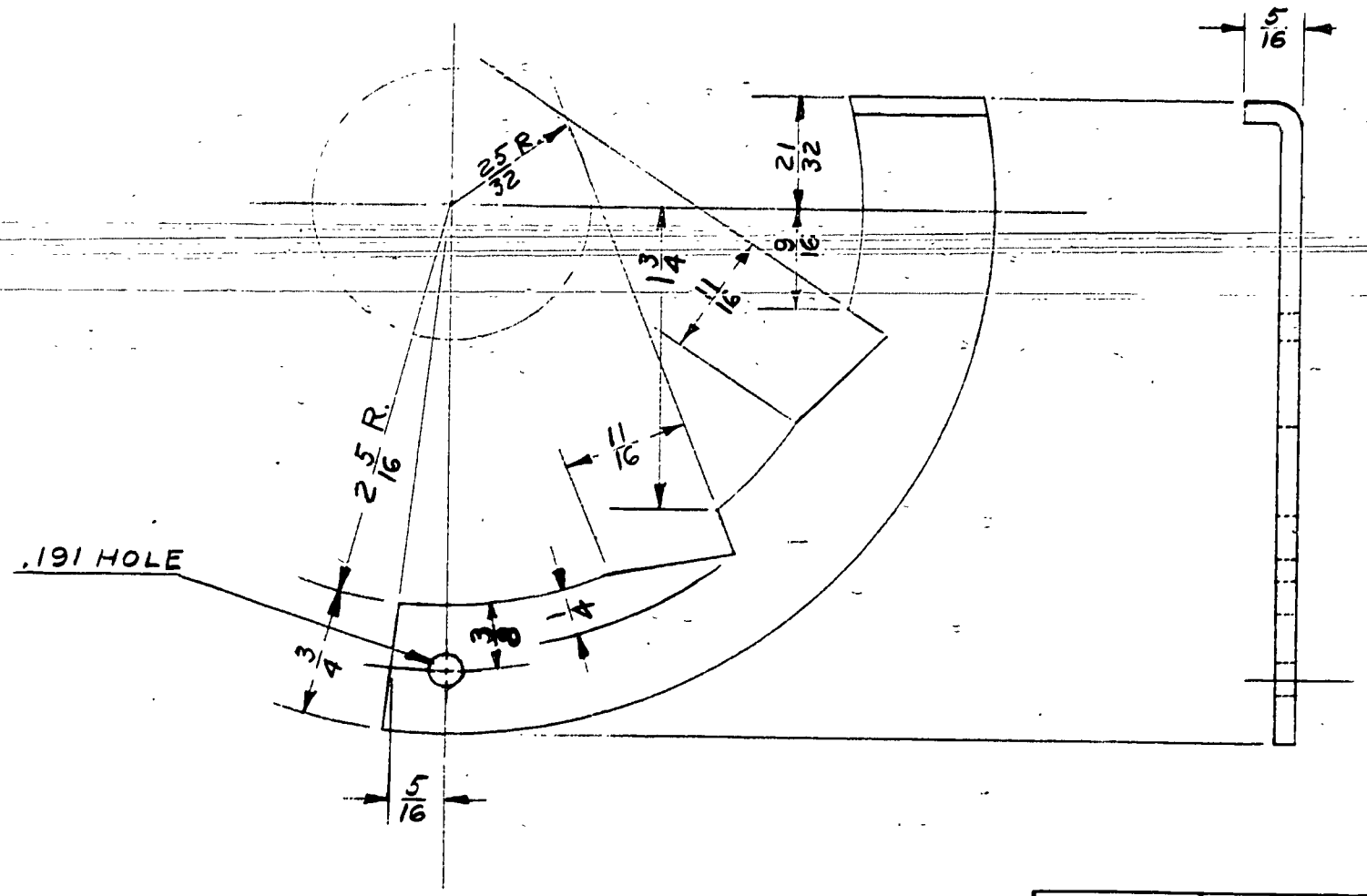

LET.	REVISION	DATE	BY	MODEL	PER PLANE	NEXT ASSEMBLY	SUPERSEDES	SUP. BY	

THIS DRAWING IS THE PROPERTY OF THE PIPER AIRCRAFT CORP. AND ITS POSSESSION BY UNAUTHORIZED PERSONS SHALL NOT BE CONSTRUED AS PERMISSION TO REPRODUCE FOR SALE, IN WHOLE OR IN PART, ANY DEVICES SHOWN THEREON.

PIPER AIRCRAFT CORP.
LOCK HAVEN, PENNA.

PART No.	No. REQ.	MATERIAL SIZE	MATERIAL DESCRIPTION
	1	.095X3½X4	#1025 STEEL

SCALE FULL SIZE — TOTAL WT.—LBS.

FINISH—PIPER SPECIFICATION #10

MANUFACTURING PRACTICES—PIPER SPECIFICATION #9

RATCHET-FLAP LEVER

DRAFTSMAN	CHECKER	STANDARDS	
J.S.O. 12-29-49	J.C.B. 1-4-50		12776

135

A 135

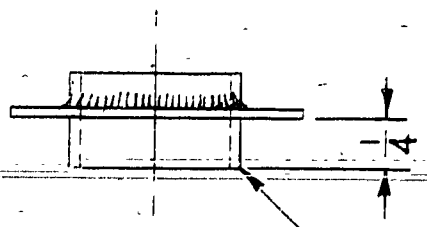

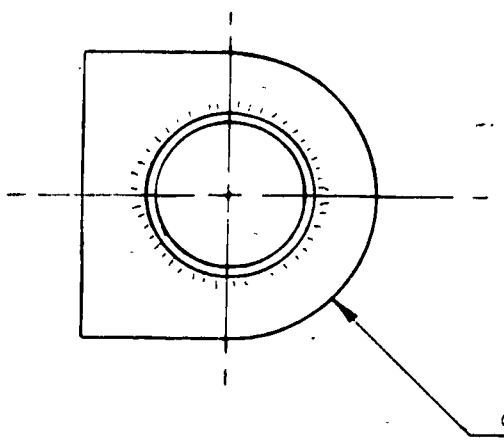

PART No.	No. REQ.	MATERIAL
86102-79	1	BUSHING
81172-58	1	LUG

SCALE FULL SIZE | TOTAL WT.—LBS.

FINISH—PIPER SPECIFICATION #10

MANUFACTURING PRACTICES—PIPER SPECIFICATION #9

LUG ASSEMBLY—FLAP LEVER

MODEL	PER PLANE	NEXT ASSEMBLY	SUPERSEDES	SUP. BY

THIS DRAWING IS THE PROPERTY OF THE PIPER AIRCRAFT CORP. AND ITS POSSESSION BY UNAUTHORIZED PERSONS SHALL NOT BE CONSTRUED AS PERMISSION TO REPRODUCE FOR SALE, IN WHOLE OR IN PART. ANY DEVICES SHOWN THEREON.

LET.	REVISION	DATE	BY

PIPER AIRCRAFT CORP.
LOCK HAVEN, PENNA.

K.D.D.	H.R.K.		12777
12-30-49	1-5-50		
DRAFTSMAN	CHECKER	STANDARDS	

136

A136

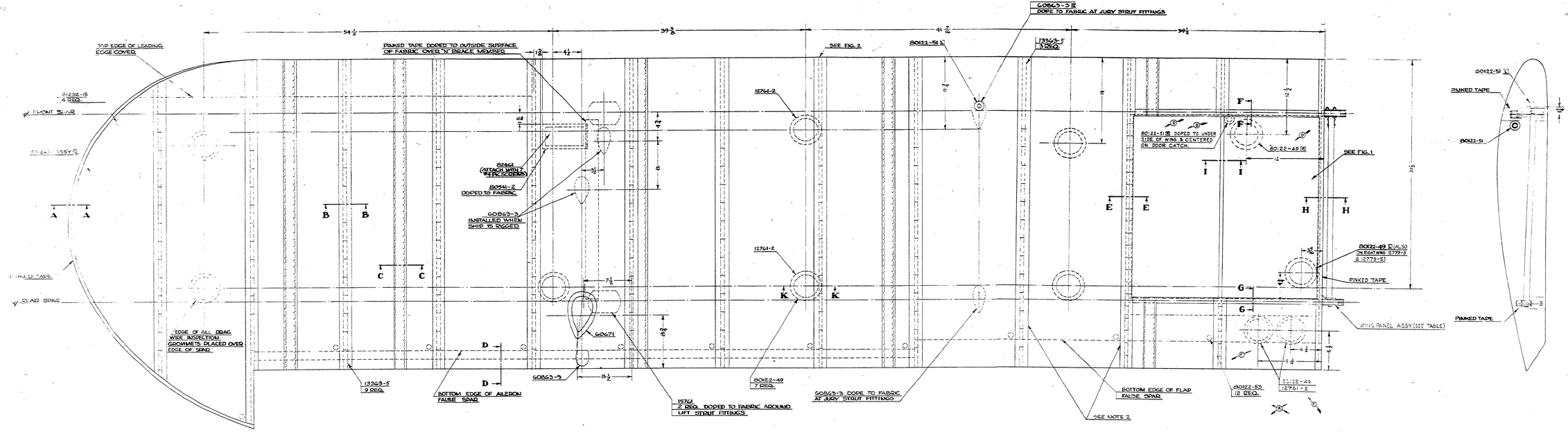

12761-2 WING ASSY.	WING PANEL ASSY.	REMARKS
12779	12778	L.H. SHOWN
12779-1	12778-1	R.H. OPPOSITE & EXCEPT AS NOTED
12779-3	12778-3	R.H. SAME AS 12779-1 EXCEPT WITH PROVISIONS FOR FUEL TANK
12779-4	12778-4	L.H. SHOWN
12779-5	12778-5	R.H. SAME AS 12779-3 EXCEPT WITH PROVISIONS FOR NAV. LIGHTS
12779-6	12778-6	L.H. SAME AS 12779-4 EXCEPT WITH PROVISIONS FOR LANDING LIGHTS

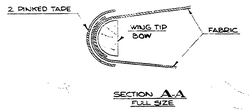

SECTION **A-A**
FULL SIZE

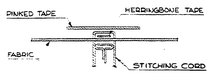

SECTION: **B-B**
TYPICAL METHOD OF ATTACHING FABRIC TO RIB
FULL SIZE



SECTION **C-C**
TYPICAL METHOD OF COVERING FABRIC SEAM
FULL SIZE

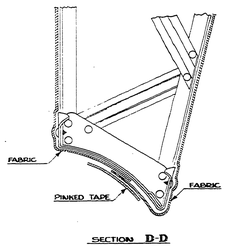

SECTION **D-D**
FULL SIZE

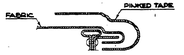

SECTION **E-E**
FULL SIZE

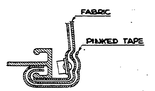

SECTION **F-F**
FULL SIZE

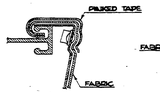

SECTION **G-G**
FULL SIZE



SECTION **H-H**
FULL SIZE

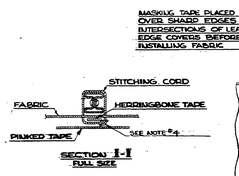

SECTION **I-I**
FULL SIZE



SECTION **K-K**
FULL SIZE



SECTION **L-L**
FULL SIZE

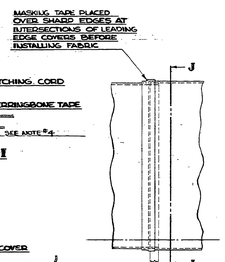

FIG. 2
6 IN. = 1 FT.

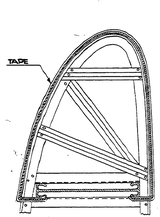

SECTION **J-J**

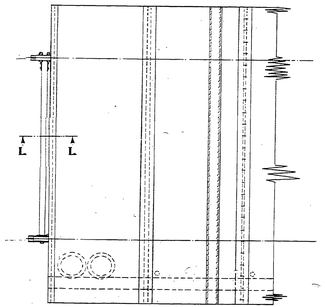

FIG. 1
RIGHT WING COVERING DETAIL AT BUTT END (ON 12779-1 ONLY)
2 IN. = 1 FT.

NOTES:
1. PARTS MARKED [L] USED ON LEFT ASSEMBLY ONLY. PARTS MARKED [R] USED ON RIGHT ASSEMBLY ONLY.
2. TWO INCH 216 STITCH SPACING ON #2 & #3 RIBS. THREE INCH 216 STITCH SPACING ON ALL OTHER RIBS
3. ALL GROMMETS & REINFORCEMENTS ARE APPLIED TO OUTSIDE OF FABRIC.
4. USE SEINE KNOTS TO ATTACH 216 STITCHING CORD.
5. ON MODEL L-21A AIRPLANES INCLUDE 10 INSPECTION COVERS 12761-2 WITH WING ASSY. 12779-5 AND 11 INSPECTION COVERS 12761-2 WITH WING ASSY. 12779-6.

12761-2	2	COVER	
	11	ASSY.	SEE NOTE (5)
80122-49	10	WASHER	AN
	3		AN
	1	9"x 75"	NONFLEX CLOTH ASHWING TAPE PINCH. RIP TAPE CHEC
	1	.250 H [DIAMONDS]	TYPE CHEC
	1	2X2X20 FT. [TWO-WAY]	FABRIC CHEC
#4	7	96 LG.	TYPE X-STONE W
82461	1		INSPECTION WIN
81232-15	4		PINS
80541-3	1		INSPECTION WINDOW
80122-59	12		
80122-51	2		WASHERS
SEE 12761	1		WING PANEL ASSY.
60863-9	1		
60863-2	1		REINFORCEMENT
60671	1		GROMMET
12761	2		REINFORCEMENT
-2	1		INSPECTION WINDOW
13349-5	12		COTTON HERRINGBONE TAPE

The drawing is the property of the Piper Aircraft Corp. and is loaned subject to return upon request and not to be copied or reproduced in whole or in part without written permission of said Co.

M	LOCKER NUTS & ADDED	5-9-58	MCP			
L	80122-49 WAS 52 AN [illegible]	3-6-58	MCP			
K	STRUCTURAL REVISIONS	10-1-56	MCP			
J	60863-3 ADDED	8-2-56	MCP			
H	60863-2 ADDED	2-15-56	MCP			
G	80122-51 WAS 52 AN [illegible]	12-5-55	MCP			
F	80122-49 WAS 52 AN [illegible]	9-6-55	MCP			
E	80122-52 ADDED	7-25-55	MCP			
D	STRUCTURAL REVISIONS	5-25-55	MCP			
REV.	REVISION	DATE	BY			

MODEL PER PLANE, EXCEPT ASSEMBLY, SUFFIX BUT 'A'

PIPER AIRCRAFT CORP.
LOCK HAVEN, PENNA.

WING ASSEMBLY COVERED

SCALE	DRAWN	TRACED
FULL	C.R.L.	
CHECKED	DATE	
	12-5-55	

12779

B9

B9

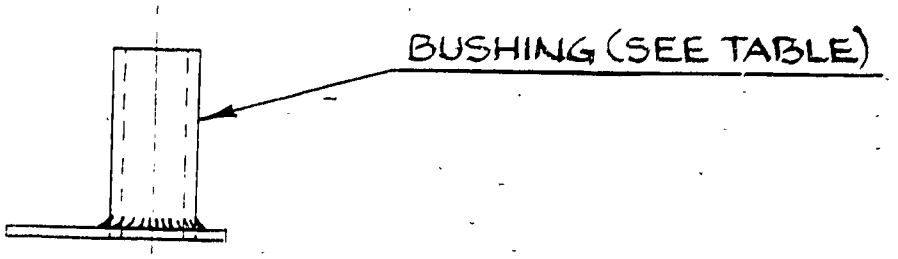

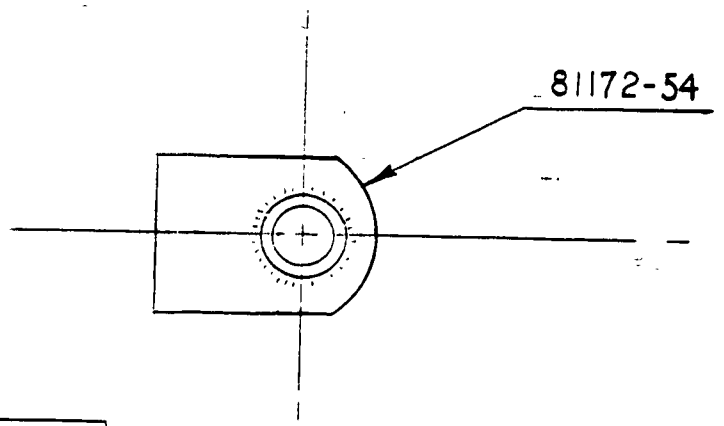

BEARING ASSY.	BUSHING NO.
12780	86102-81
12780-2	86102-73

PART No.	No. REQ.	MATERIAL
	1	BUSHING (SEE TABLE)
81172-54	1	LUG

SCALE FULL SIZE | TOTAL WT.–LBS.

FINISH–PIPER SPECIFICATION #10

MANUFACTURING PRACTICES–PIPER SPECIFICATION #9

P.S.-13

MODEL	PER PLANE	NEXT ASSEMBLY	SUPERSEDES	SUP. BY

THIS DRAWING IS THE PROPERTY OF THE PIPER AIRCRAFT CORP. AND ITS POSSESSION BY UNAUTHORIZED PERSONS SHALL NOT BE CONSTRUED AS PERMISSION TO REPRODUCE FOR SALE, IN WHOLE OR IN PART, ANY DEVICES SHOWN THEREON.

BEARING ASSEMBLY - PULLEY

LET.	REVISION	DATE	BY
A	-2 ADDED	4-5-51	M.G.

PIPER AIRCRAFT CORP.
LOCK HAVEN, PENNA.

DRAFTSMAN	CHECKER	STANDARDS
K.D.D. 1-3-50	H.R.K. 1-6-50	

12780

137

A 137

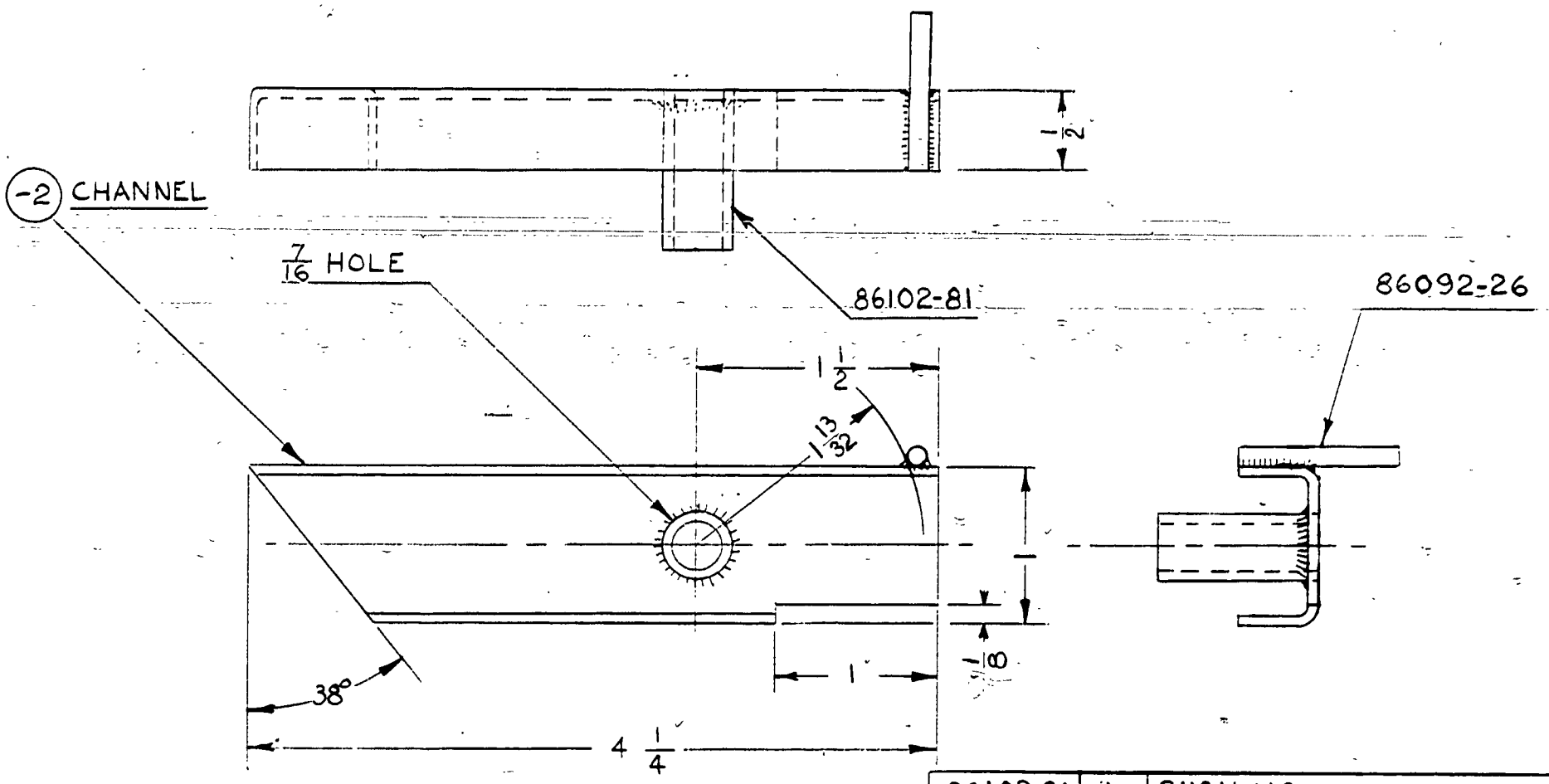

PART No.	No. REQ.	SIZE	DESCRIPTION
86102-81	1	BUSHING	
86092-26	1	PIN	
-2	1	.062×2×4 1/4	*1025 STEEL
		MATERIAL	

SCALE FULL SIZE — TOTAL WT.–LBS.

FINISH–PIPER SPECIFICATION #10

MANUFACTURING PRACTICES–PIPER SPECIFICATION #9

CHANNEL ASSEMBLY - PULLEY MOUNTING

LET.	REVISION	DATE	BY

MODEL	PER PLANE	NEXT ASSEMBLY	SUPERSEDES	SUP. BY

THIS DRAWING IS THE PROPERTY OF THE PIPER AIRCRAFT CORP. AND ITS POSSESSION BY UNAUTHORIZED PERSONS SHALL NOT BE CONSTRUED AS PERMISSION TO REPRODUCE FOR SALE, IN WHOLE OR IN PART, ANY DEVICES SHOWN THEREON.

PIPER AIRCRAFT CORP.
LOCK HAVEN, PENNA.

K.D.D.	H.R.K.		
1-3-50	1-6-50		12782
DRAFTSMAN	CHECKER	STANDARDS	

A 138

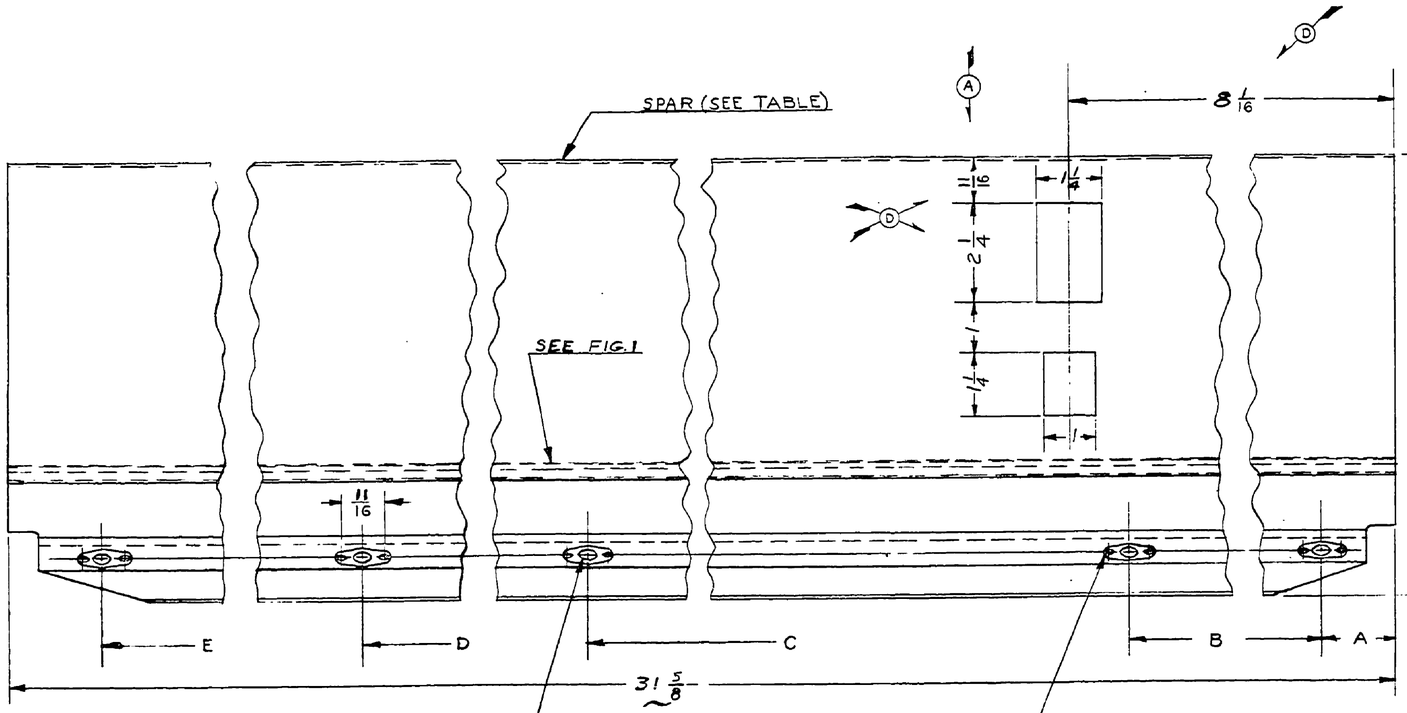

.250 HOLE
FOR BOOTS ANCHOR NUT
5 REQ.
TO MATCH MATING PART.

.098 HOLE
3/32 X 3/64L RIVET
10 REQ.

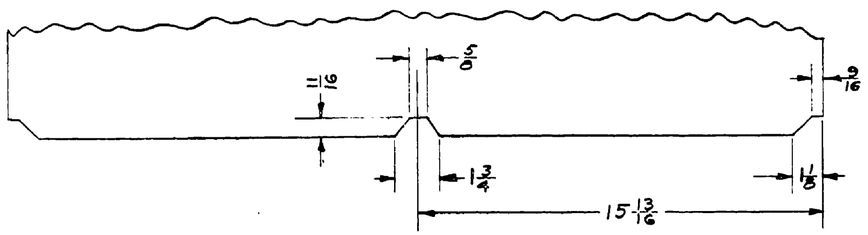

FIG.1
FLAT PATTERN OF RIB CUTOUT
3 IN. = 1 FT.

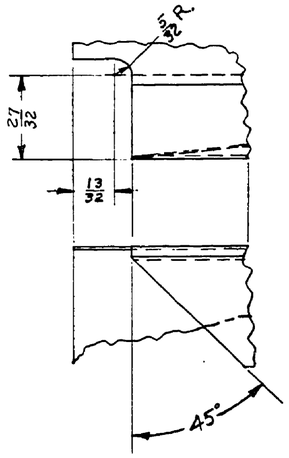

VIEW "A-A"
BOTH ENDS - FULL SIZE

ASSY. NO.	SPAR NO.	A	B	C	D	E	REMARKS
12784	12784-2	1 9/16	7 1/8	14 1/4	21 3/8	28 1/2	SHOWN
12784-3	12784-4	1 7/16	7 3/16	14 3/8	21 9/16	28 3/4	FORMED OPP. TO -2
12784-5	12784-6	1 7/16	7 3/16	14 3/8	21 9/16	28 3/4	SHOWN

LET.	REVISION	DATE	BY
D	8 1/16 WAS 8 1/4; 1 1/16 WAS 3/4; 2 1/4 WAS 2	12-6-50	HRK
C	.025 WAS .020	10-16-50	FCS.
B	-5 ADDED	9-11-50	K.D.
A	TABLE & -3 ADDED; 1 7/16 WAS 1 7/16; 1 1/4 WAS 11 5/8; 1 WAS 3/4; 5/8 WAS 5/8; 1/4 WAS 5/16; 31 5/8 WAS 31 3/4	2-21-50	C.K.

THIS DRAWING IS THE PROPERTY OF THE PIPER AIRCRAFT CORP. AND ITS POSSESSION BY UNAUTHORIZED PERSONS SHALL NOT BE CONSTRUED AS PERMISSION TO REPRODUCE FOR SALE, IN WHOLE OR IN PART, ANY DEVICES SHOWN THEREON

MODEL	PER PLANE	NEXT ASSEMBLY	SUPERSEDES	SUP. BY

PIPER AIRCRAFT CORP.
LOCK HAVEN, PENNA.

PART No.	NO. REQ.	SIZE	DESCRIPTION / MATERIAL
	10	3/32 X 9/64L	STL. TUBULAR CAD. PLATED RIVET
	5	BOOTS ANCHOR NUT #W2SE 1032	
SEE TABLE	1	.025 X 20 3/8 X 31 7/8	35-½H. ALUM.

SCALE 6 IN. = 1 FT. & NOTED. TOTAL WT.—LBS.
FINISH—PIPER SPECIFICATION #10
MANUFACTURING PRACTICES—PIPER SPECIFICATION #9

SPAR ASSEMBLY-WING INBOARD FALSE

DRAFTSMAN	CHECKER	STANDARDS
J.S.O. 1-3-50	C.E.K. 1-6-50	

12784

A768

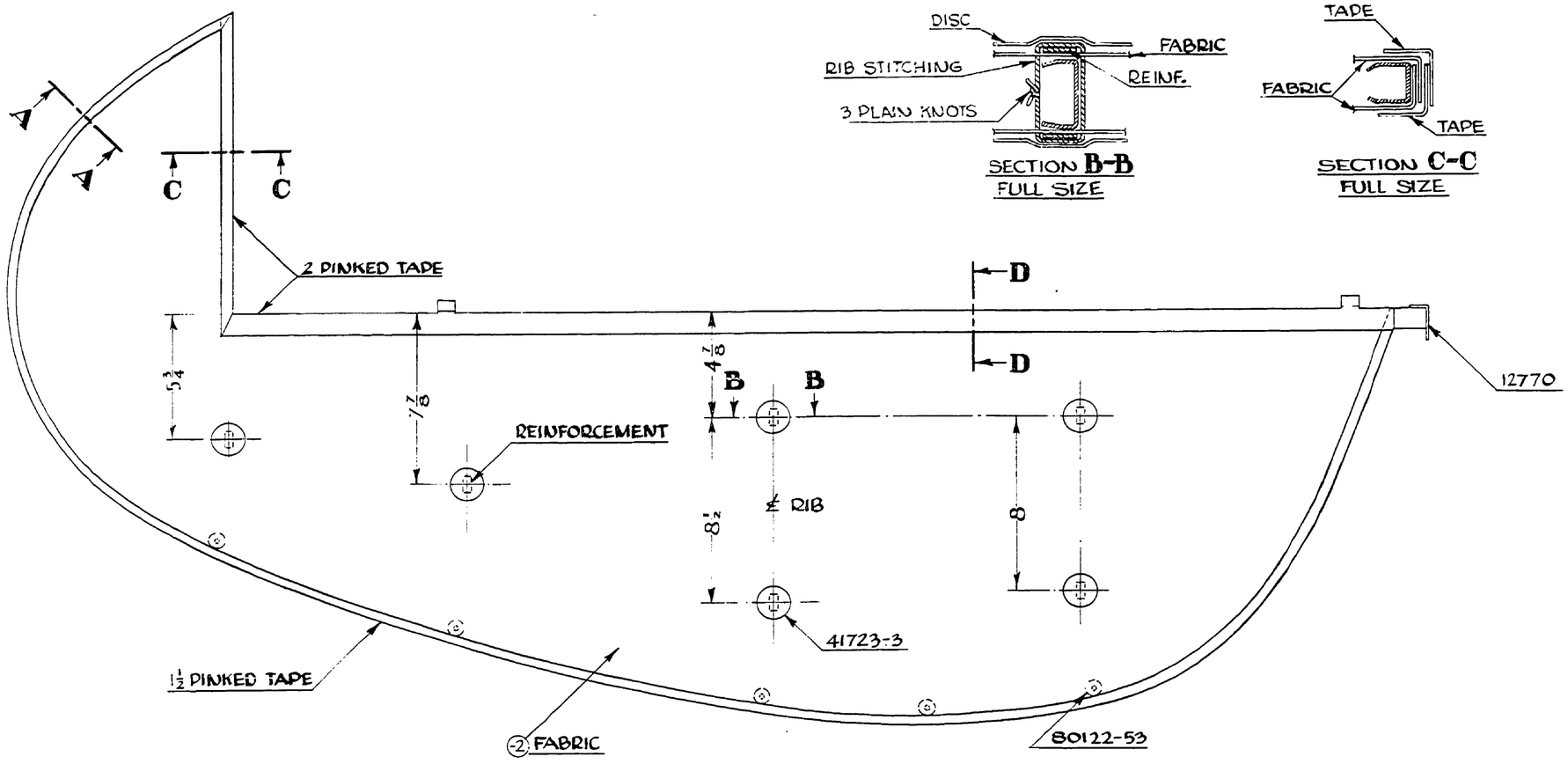

SECTION **B-B**
FULL SIZE

SECTION **C-C**
FULL SIZE

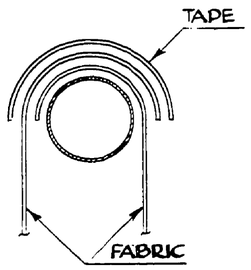

SECTION **D-D**
FULL SIZE

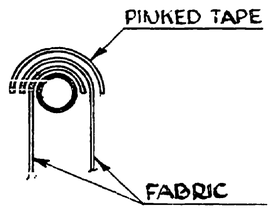

SECTION **A-A**
FULL SIZE

NOTE:
FABRIC DOPED TO FRAME AND OVERLAPPED
SEAMS DOPED AND COVERED WITH PINKED
TAPE AS SHOWN (OVERLAP NOT LESS THAN 1 IN.)

12789 SHOWN
12789-1 OPPOSITE

THIS DRAWING IS THE PROPERTY OF THE PIPER AIRCRAFT CORP. AND ITS POSSESSION BY UNAUTHORIZED PERSONS SHALL NOT BE CONSTRUED AS PERMISSION TO REPRODUCE FOR SALE, IN WHOLE OR IN PART, ANY DEVICES SHOWN THEREON

LET.	REVISION	DATE	BY

MODEL	PER PLANE	NEXT ASSEMBLY	SUPERSEDES	SUP. BY

PIPER AIRCRAFT CORP.
LOCK HAVEN, PENNA.

PART NO.	NO. REQ.	SIZE	DESCRIPTION / MATERIAL
	1	1½ x 100	PINKED TAPE - SAE
	1	2 x 84	SPEC. #AMS 3806
80122-53	5		WASHER
41723-3	12		FABRIC DISC
12770	1		ELEVATOR ASSEMBLY
-2	2	36 x 66	FABRIC - SAE SPEC. #AMS 3806
	1	18 L	BARBOURS #7 STITCHING CORD
	12	⅜ x ¾	HERRINGBONE WEAVE COT. TAPE

SCALE 3 IN. = 1 FT. & NOTED — TOTAL WT.—LBS.
FINISH—PIPER SPECIFICATION #10
MANUFACTURING PRACTICES—PIPER SPECIFICATION #9

ELEVATOR ASSEMBLY-
COVERED

DRAFTSMAN	CHECKER	STANDARDS
M.W.C. 1-4-50	C.E.K. 1-5-50	

12789

769

A769

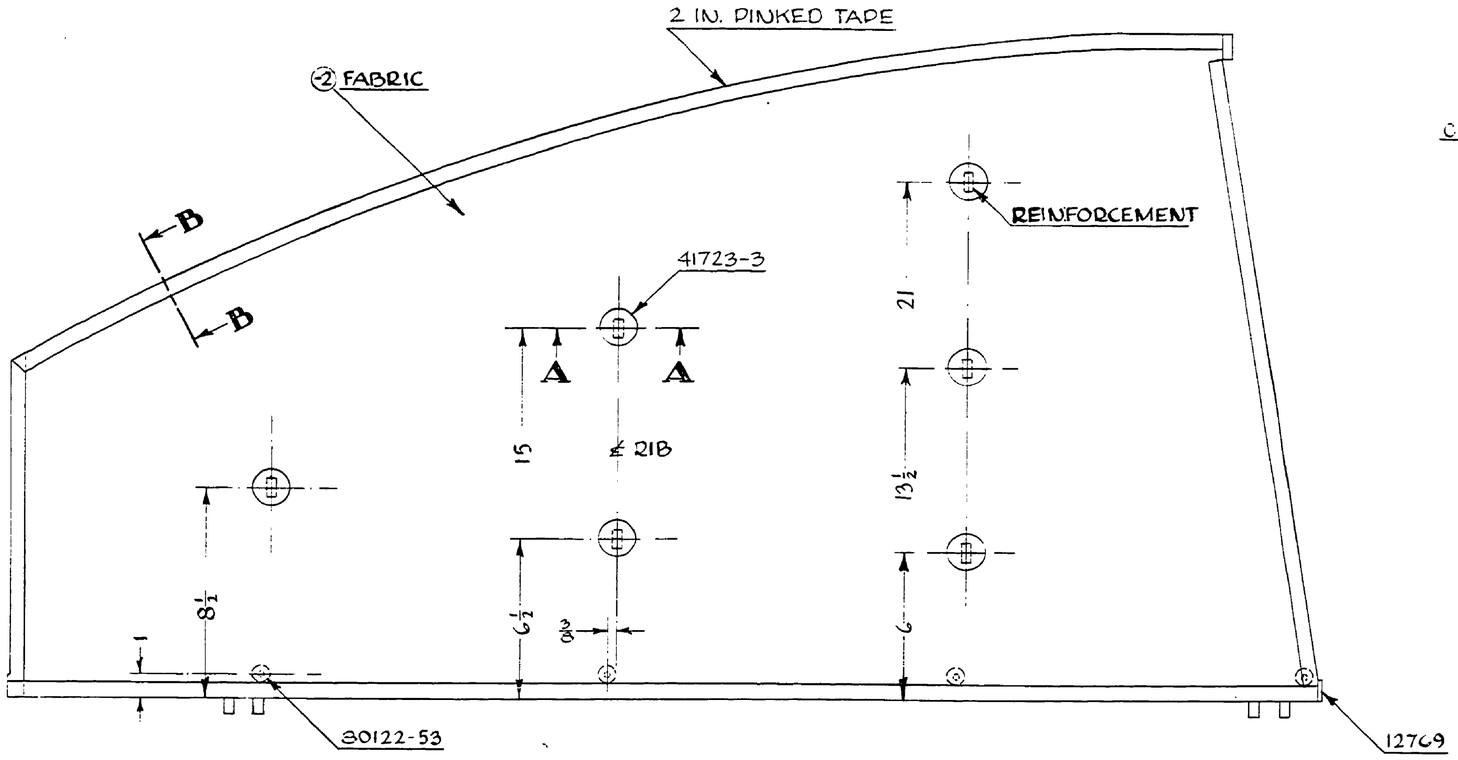

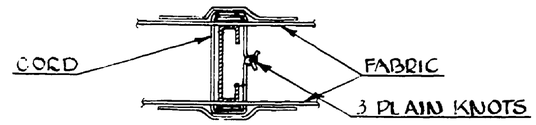

SECTION **A–A**
FULL SIZE

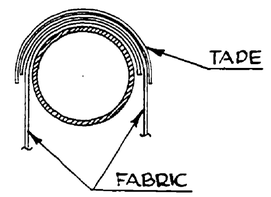

SECTION **B–B**
FULL SIZE

NOTE:
FABRIC DOPED TO FRAME & OVERLAPPED. SEAMS DOPED AND COVERED WITH PINKED TAPE AS SHOWN (OVERLAP NOT LESS THAN 1 IN.)

12790 L.H. SHOWN
12790-1 R.H. OPPOSITE

PART No.	NO. REQ.	SIZE	DESCRIPTION / MATERIAL
80122-53	4		WASHER
41723-3	12		FABRIC DISC
12769	1		STABILIZER ASS'Y.
	1	2X143	PINKED TAPE-SAE SPEC.#AMS 3806
	1	20 L	BARBOURS #7 STITCHING CORD
	12	⅜X¾	HERRINGBONE WEAVE COT. TAPE
-2	2	29X54	FABRIC-SAE SPEC.#AMS 3806

SCALE: 3 IN. = 1 FT. & NOTED — TOTAL WT.—LBS.

FINISH—PIPER SPECIFICATION #10

MANUFACTURING PRACTICES—PIPER SPECIFICATION #9

THIS DRAWING IS THE PROPERTY OF THE PIPER AIRCRAFT CORP. AND ITS POSSESSION BY UNAUTHORIZED PERSONS SHALL NOT BE CONSTRUED AS PERMISSION TO REPRODUCE FOR SALE, IN WHOLE OR IN PART, ANY DEVICES SHOWN THEREON.

LET.	REVISION	DATE	BY

MODEL	PER PLANE	NEXT ASSEMBLY	SUPERSEDES	SUP. BY

PIPER AIRCRAFT CORP.
LOCK HAVEN, PENNA.

STABILIZER ASSEMBLY-COVERED

M.W.G.	C. E. K.		
1-5-50	1-5-50		12790
DRAFTSMAN	CHECKER	STANDARDS	

770

A770

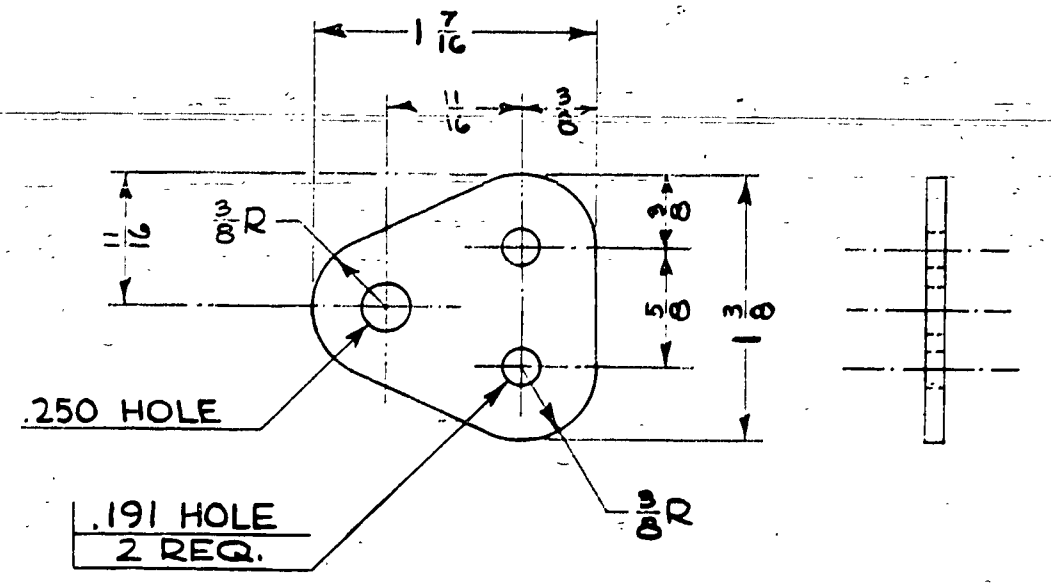

LET.	REVISION	DATE	BY	MODEL	PER PLANE	NEXT ASSEMBLY	SUPERSEDES	SUP. BY	

THIS DRAWING IS THE PROPERTY OF THE PIPER AIRCRAFT CORP. AND ITS POSSESSION BY UNAUTHORIZED PERSONS SHALL NOT BE CONSTRUED AS PERMISSION TO REPRODUCE FOR SALE, IN WHOLE OR IN PART, ANY DEVICES SHOWN THEREON.

PIPER AIRCRAFT CORP.
LOCK HAVEN, PENNA.

PART No.	No. REQ.	SIZE	DESCRIPTION / MATERIAL
		.095X1 7/16X1 3/8	#1025 STEEL

SCALE FULL SIZE — TOTAL WT.—LBS.

FINISH—PIPER SPECIFICATION #10

MANUFACTURING PRACTICES—PIPER SPECIFICATION #9

LINK-
FLAP CABLE

DRAFTSMAN	CHECKER	STANDARDS
M.W.G. 1-6-50	C. E. K. 1-6-50	

12793

139

A 139

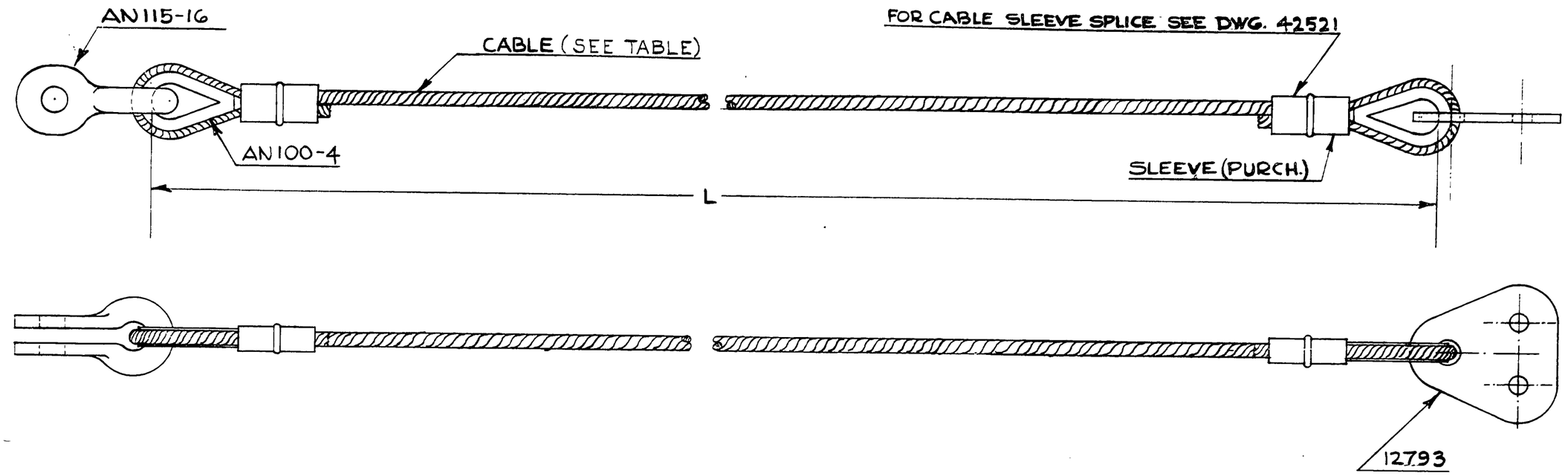

ASSY. NO.	CABLE NO.	L	CABLE MATERIAL	REMARKS
12794	12794-2	105 3/4	1/8 DIA. 7×19 GAL. AIRCRAFT CORD	
12794-3	———	105 3/4	1/8 DIA. 7×19 ST. STL. AIRCRAFT CABLE	USED ON SEAPLANES

PART NO.	No. REQ.	SIZE / DESCRIPTION / MATERIAL
42521	—	CABLE SLEEVE SPLICE
12793	1	LINK
	2	SLEEVE #18-3-M PURCH. THE NATIONAL TELEPHONE SUPPLY CO.
AN100-4	2	THIMBLE
AN115-16	1	SHACKLE
	1	CABLE (SEE TABLE)

SCALE FULL SIZE — TOTAL WT.–LBS.

FINISH–PIPER SPECIFICATION #10

MANUFACTURING PRACTICES–PIPER SPECIFICATION #9

LET.	REVISION	DATE	BY
A	-3 & TABLE ADDED	5-4-50	HRK

MODEL	PER PLANE	NEXT ASSEMBLY	SUPERSEDES	SUP. BY

THIS DRAWING IS THE PROPERTY OF THE PIPER AIRCRAFT CORP. AND ITS POSSESSION BY UNAUTHORIZED PERSONS SHALL NOT BE CONSTRUED AS PERMISSION TO REPRODUCE FOR SALE, IN WHOLE OR IN PART, ANY DEVICES SHOWN THEREON.

PIPER AIRCRAFT CORP.
LOCK HAVEN, PENNA.

CABLE ASSEMBLY–FLAP

DRAFTSMAN	CHECKER	STANDARDS
M.W.G. 1-6-50	C.E.K. 1-6-50	

12794

541

A 541

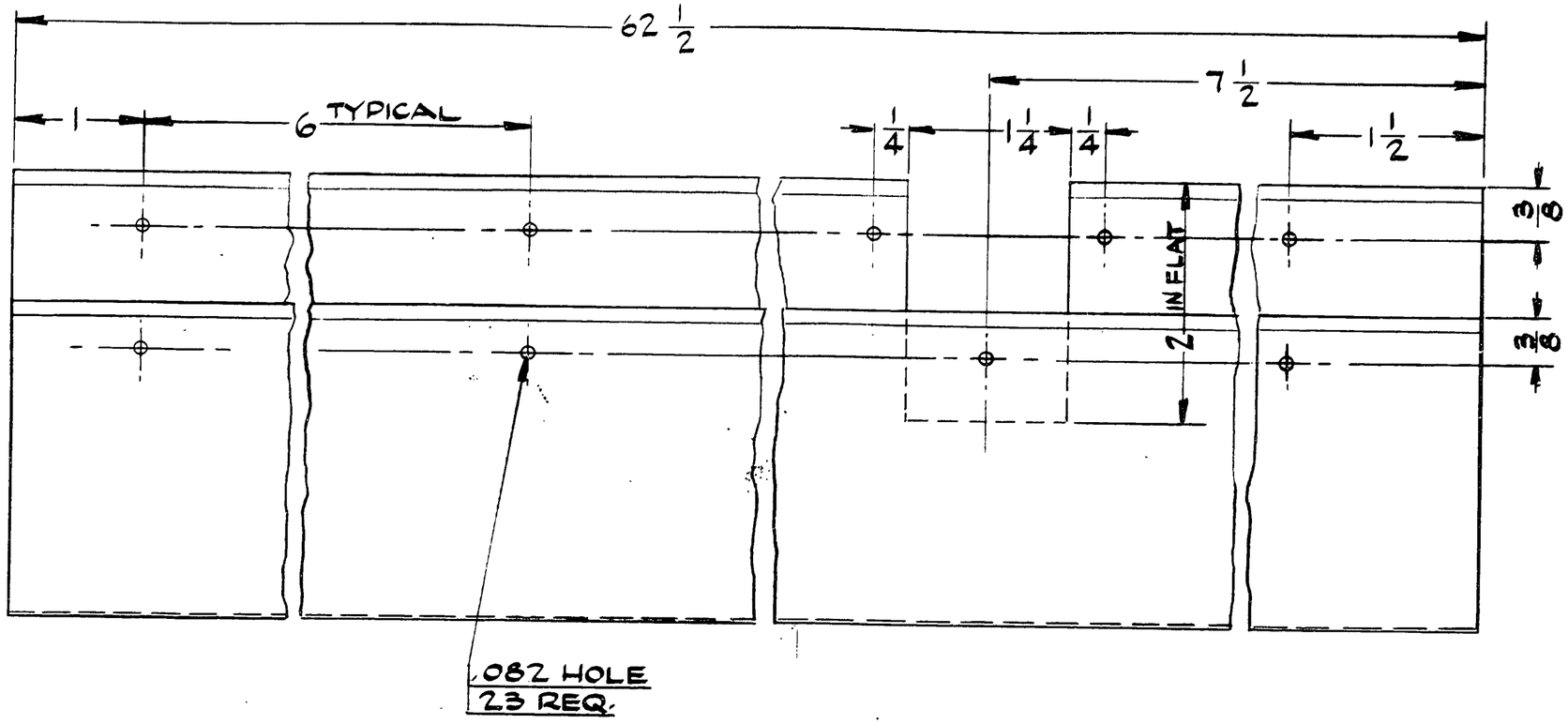

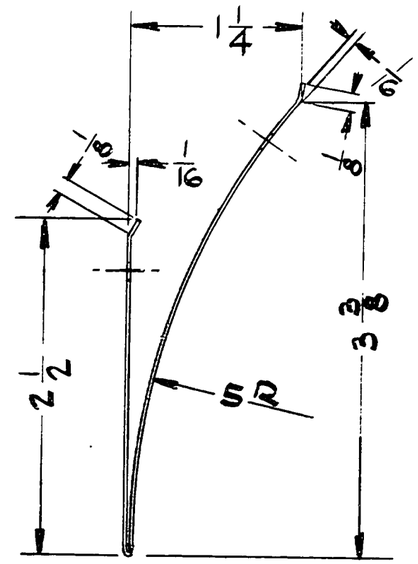

12795 L.H. SHOWN
12795-1 R.H. OPPOSITE

LET.	REVISION	DATE	BY

MODEL	PER PLANE	NEXT ASSEMBLY	SUPERSEDES	SUP. BY

THIS DRAWING IS THE PROPERTY OF THE PIPER AIRCRAFT CORP. AND ITS POSSESSION BY UNAUTHORIZED PERSONS SHALL NOT BE CONSTRUED AS PERMISSION TO REPRODUCE FOR SALE, IN WHOLE OR IN PART, ANY DEVICES SHOWN THEREON.

PIPER AIRCRAFT CORP.
LOCK HAVEN, PENNA.

PART No.	No. REQ.	SIZE	DESCRIPTION
		.016×6 1/4×62 1/2	3S 1/2H ALUM
		MATERIAL	

SCALE FULL SIZE | TOTAL WT.–LBS.

FINISH–PIPER SPECIFICATION #10

MANUFACTURING PRACTICES–PIPER SPECIFICATION #9

FAIRING - FLAP

DRAFTSMAN	CHECKER	STANDARDS
12C 1-6-50	J.C.B. 1-6-50	

12795

542

A542

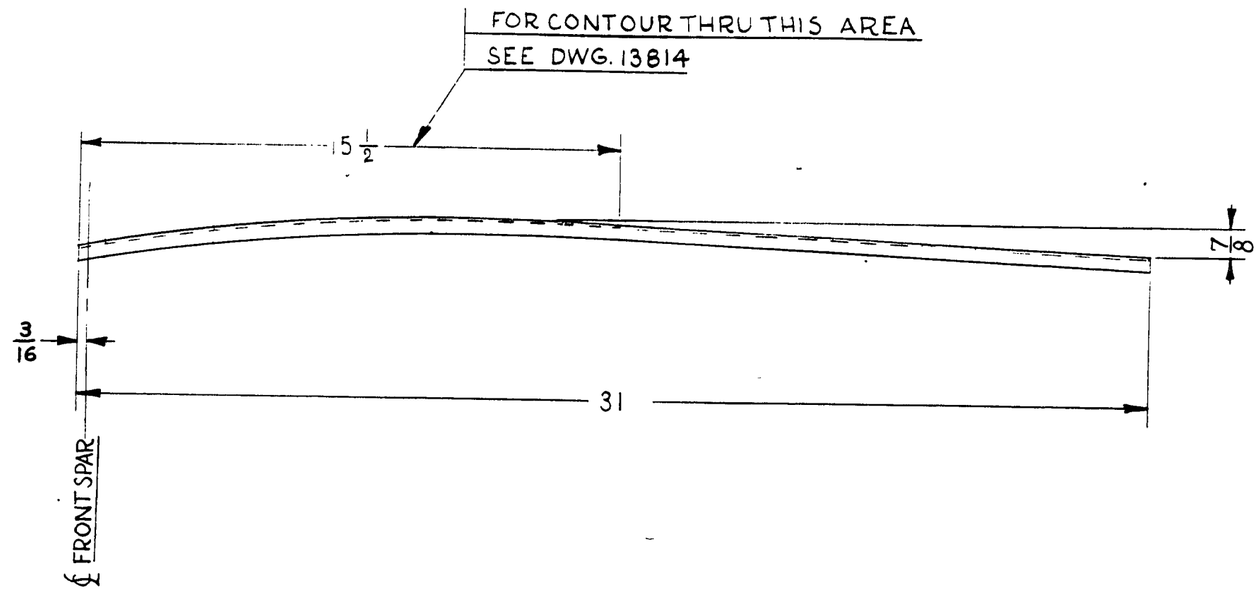

LET.	REVISION	DATE	BY	MODEL	PER PLANE	NEXT ASSEMBLY	SUPERSEDES	SUP. BY	

THIS DRAWING IS THE PROPERTY OF THE PIPER AIRCRAFT CORP. AND ITS POSSESSION BY UNAUTHORIZED PERSONS SHALL NOT BE CONSTRUED AS PERMISSION TO REPRODUCE FOR SALE, IN WHOLE OR IN PART, ANY DEVICES SHOWN THEREON.

PIPER AIRCRAFT CORP.
LOCK HAVEN, PENNA.

13814	REF.	RIB OUTLINE	
84501	REF.	CHANNEL SECTION	
		NOTED	PIPER SECTION 84501-2
PART No.	No. REQ.	SIZE	DESCRIPTION
			MATERIAL
SCALE 3 IN. = 1 FT.			TOTAL WT.–LBS.
FINISH–PIPER SPECIFICATION #10			
MANUFACTURING PRACTICES–PIPER SPECIFICATION #9			

CHANNEL-FUSELAGE TOPDECK

K. D. D.	C. E. K.		12796
1-9-50	1-10-50		
DRAFTSMAN	CHECKER	STANDARDS	

543

A 543

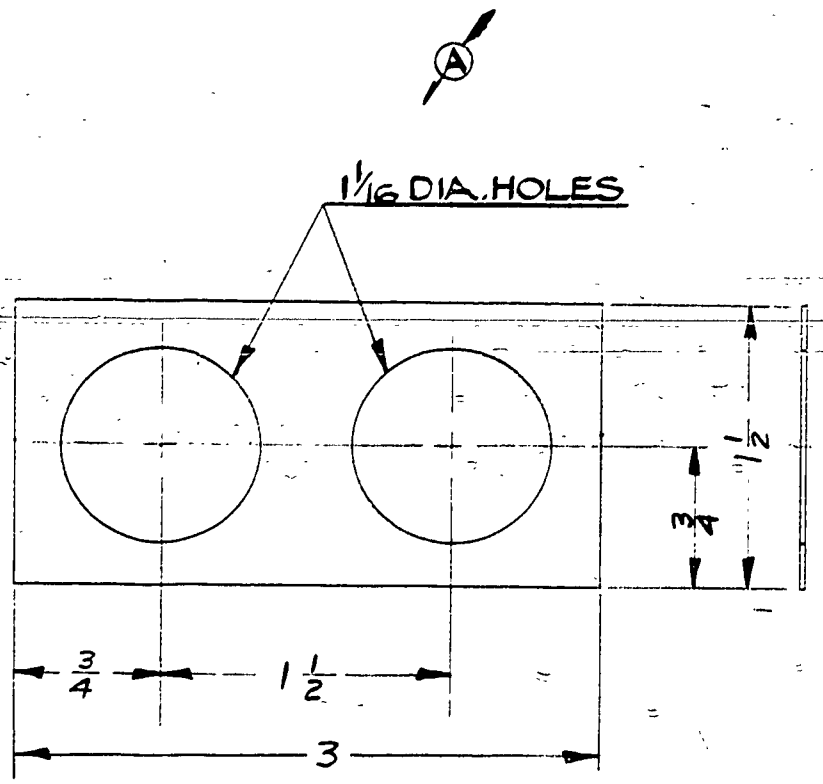

								1.	.020 x 1 1/2 x 3 STAIN. STL.-TYPE 347-2D FIN.
								No. REQ.	SIZE / DESCRIPTION
								PART No.	MATERIAL
								SCALE FULL SIZE	TOTAL WT.—LBS.
								FINISH—PIPER SPECIFICATION #10	
								MANUFACTURING PRACTICES—PIPER SPECIFICATION #9	
				MODEL	PER PLANE	NEXT ASSEMBLY	SUPERSEDES	SUP. BY	PLATE-OIL COOLER LOCK

THIS DRAWING IS THE PROPERTY OF THE PIPER AIRCRAFT CORP. AND ITS POSSESSION BY UNAUTHORIZED PERSONS SHALL NOT BE CONSTRUED AS PERMISSION TO REPRODUCE FOR SALE, IN WHOLE OR IN PART. ANY DEVICES SHOWN THEREON.

LET.	REVISION	DATE	BY
A	1 1/16 DIA. WAS 1 DIA.	3-20-50	RC

PIPER AIRCRAFT CORP.
LOCK HAVEN, PENNA.

DRAFTSMAN	CHECKER	STANDARDS
J.S.O. 1-11-50	C.E.K. 1-11-50	

12797

140

A 140

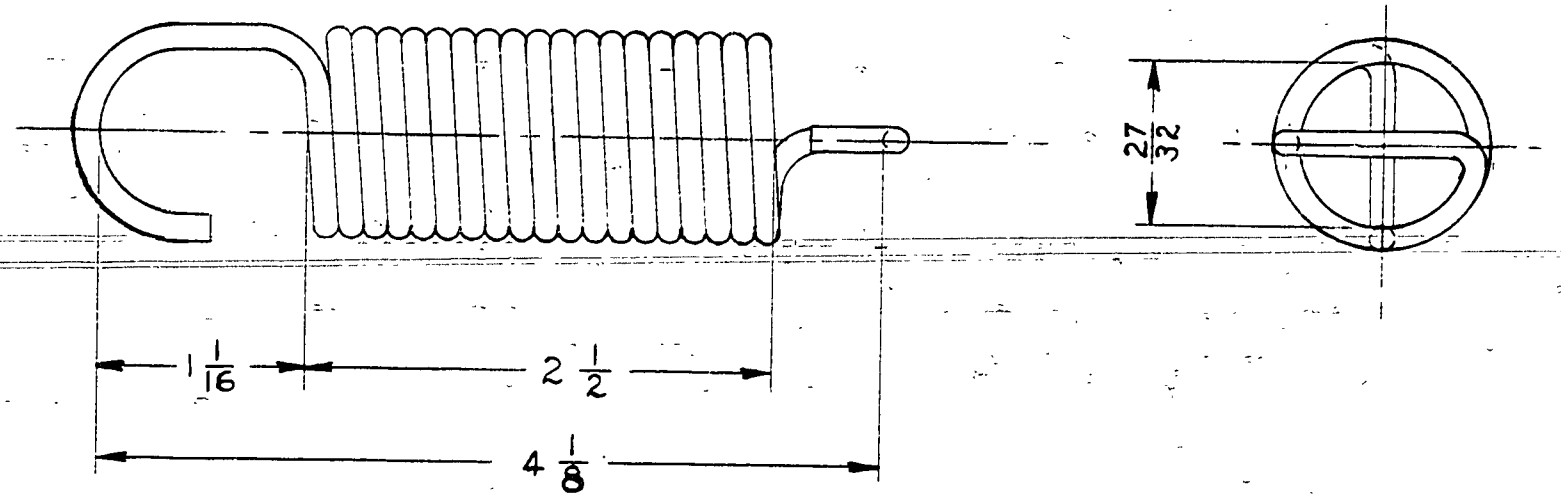

TOTAL NO. OF COILS — 18½.
CLOSELY WOUND—LOOPS AT
90° TO EACH OTHER.
LOAD AT ½ IN. EXTENSION — 11½ LBS.
LOAD AT 1½ IN. EXTENSION — 35½ LBS.
LOAD AT 2½ IN. EXTENSION — 60 LBS.
LOAD AT 3½ IN. EXTENSION — 83½ LBS.

LET.	REVISION	DATE	BY

MODEL	PER PLANE	NEXT ASSEMBLY	SUPERSEDES	SUP. BY

THIS DRAWING IS THE PROPERTY OF THE PIPER AIRCRAFT CORP. AND ITS POSSESSION BY UNAUTHORIZED PERSONS SHALL NOT BE CONSTRUED AS PERMISSION TO REPRODUCE FOR SALE, IN WHOLE OR IN PART, ANY DEVICES SHOWN THEREON.

PIPER AIRCRAFT CORP.
LOCK HAVEN, PENNA.

PART No.	No. REQ.	SIZE	MATERIAL DESCRIPTION
		.130 DIA.	MUSIC WIRE

SCALE FULL SIZE — TOTAL WT.—LBS.
FINISH—PIPER SPECIFICATION #10
MANUFACTURING PRACTICES—PIPER SPECIFICATION #9

SPRING— TAILWHEEL STEERING

DRAFTSMAN	CHECKER	STANDARDS
C. E. K. 1-12-50	J. C. B. 1-26-50	

12798

14-1

A141

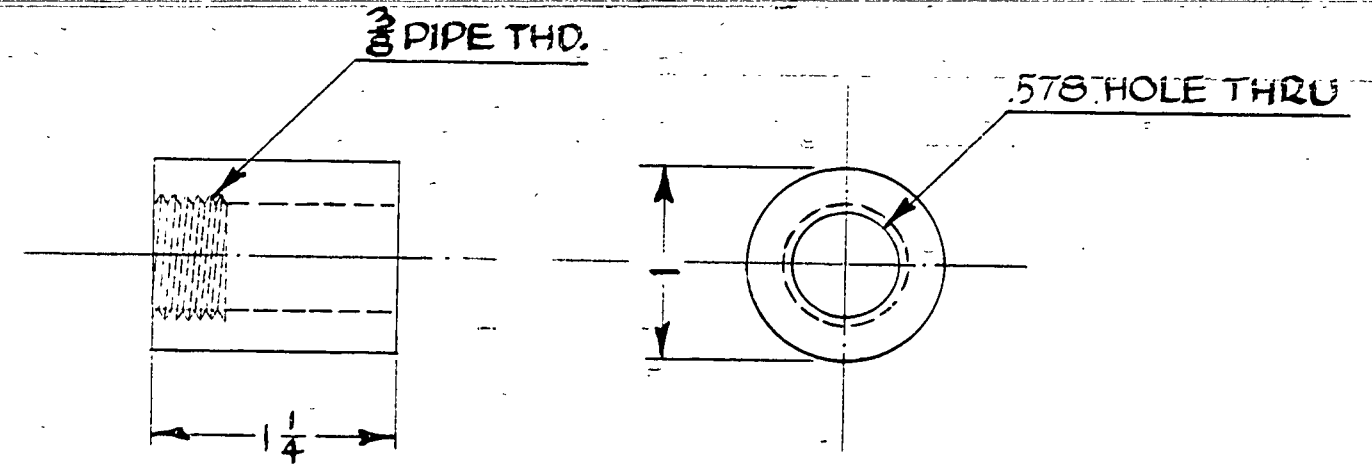
3/8 PIPE THD.
.578 HOLE THRU
1 1/4

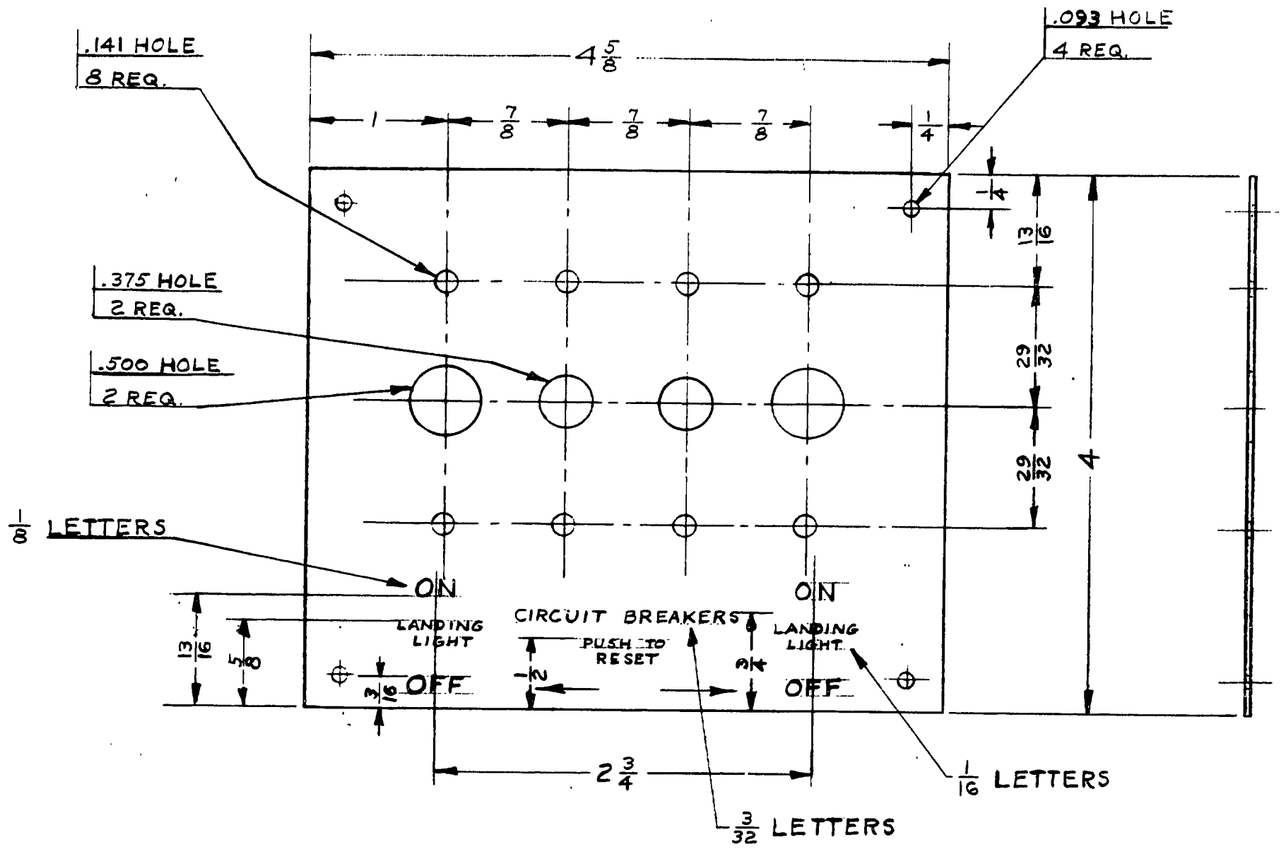

								.025X4X4 5/8	3S-½H. ALUM.
								SIZE	DESCRIPTION
							PART No.	No. REQ.	MATERIAL
							SCALE FULL SIZE		TOTAL WT.–LBS.
							FINISH–PIPER SPECIFICATION #10		
							MANUFACTURING PRACTICES–PIPER SPECIFICATION #9		
							PANEL - LANDING LIGHT SWITCH		
LET.	REVISION	DATE	BY	MODEL	PER PLANE	NEXT ASSEMBLY	SUPERSEDES	SUP. BY	

THIS DRAWING IS THE PROPERTY OF THE PIPER AIRCRAFT CORP. AND ITS POSSESSION BY UNAUTHORIZED PERSONS SHALL NOT BE CONSTRUED AS PERMISSION TO REPRODUCE FOR SALE, IN WHOLE OR IN PART, ANY DEVICES SHOWN THEREON.

PIPER AIRCRAFT CORP.
LOCK HAVEN, PENNA.

DRAFTSMAN	CHECKER	STANDARDS
J.S.O. 1-23-50	C.E.K. 1-23-50	

12807

544

A544

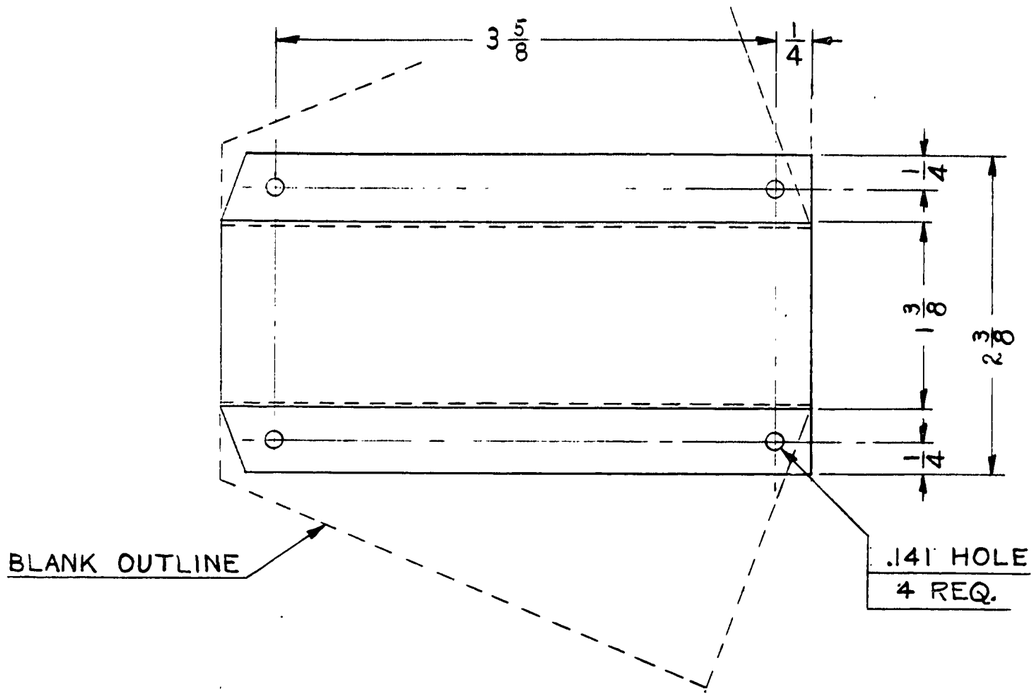

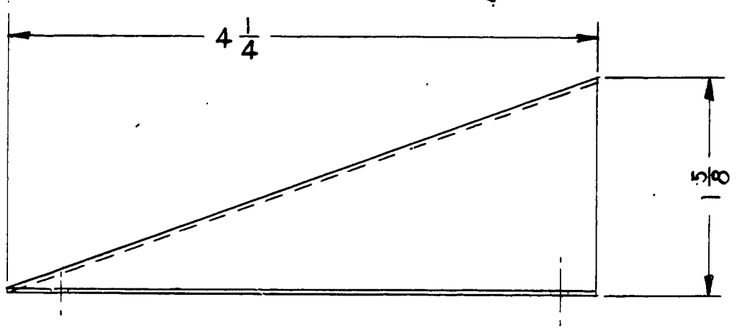

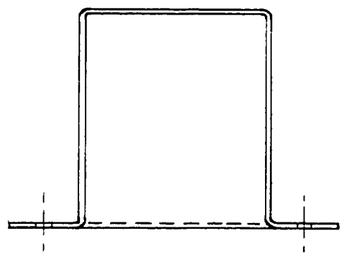

LET.	REVISION	DATE	BY

MODEL	PER PLANE	NEXT ASSEMBLY	SUPERSEDES	SUP. BY

THIS DRAWING IS THE PROPERTY OF THE PIPER AIRCRAFT CORP. AND ITS POSSESSION BY UNAUTHORIZED PERSONS SHALL NOT BE CONSTRUED AS PERMISSION TO REPRODUCE FOR SALE, IN WHOLE OR IN PART, ANY DEVICES SHOWN THEREON.

PIPER AIRCRAFT CORP.
LOCK HAVEN, PENNA.

PART No.	No. REQ.	SIZE	MATERIAL
	X	.032 x 4 1/4 x 5 5/8	#1025 STEEL

SCALE FULL SIZE — TOTAL WT.—LBS.

FINISH—PIPER SPECIFICATION #10

MANUFACTURING PRACTICES—PIPER SPECIFICATION #9

COVER — PULLEY

DRAFTSMAN	CHECKER	STANDARDS
C. E. K. 1-20-50	J. C. B. 1-23-50	

12810

545

A 545

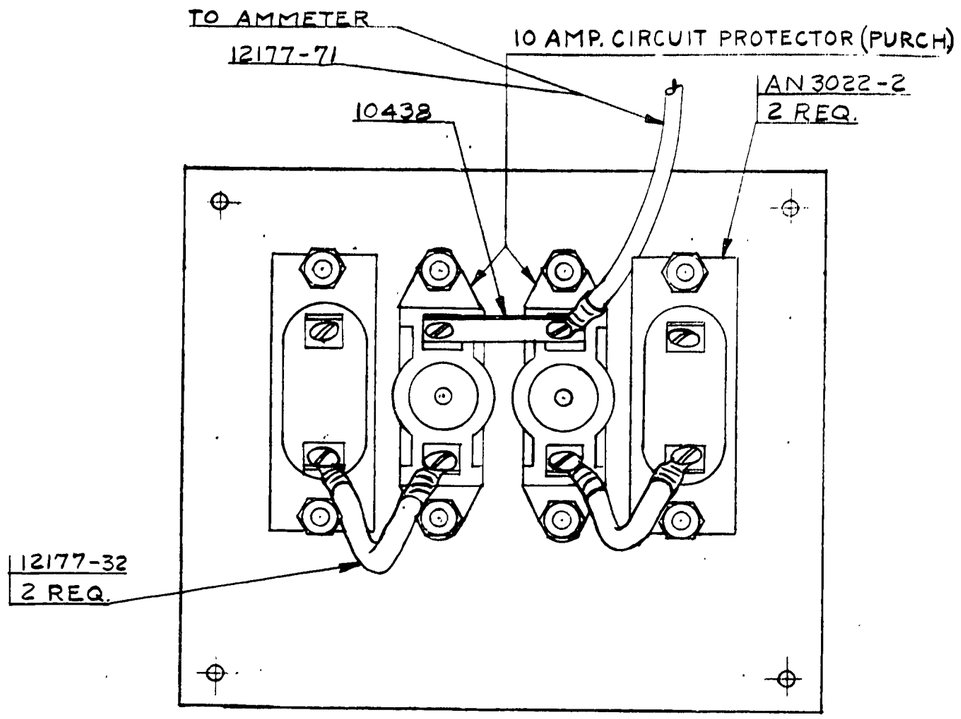

REAR VIEW

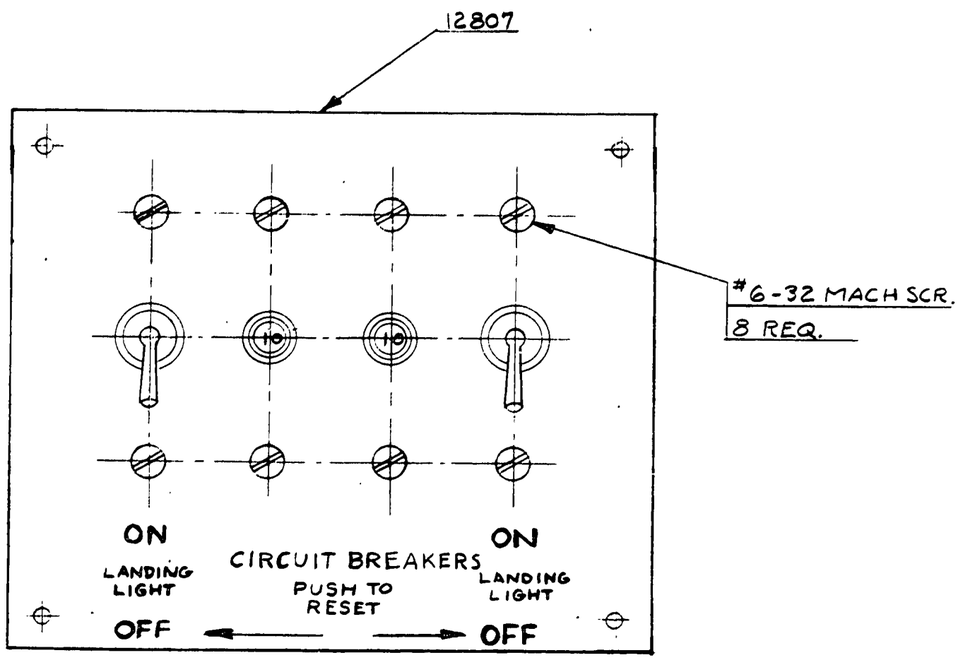

FRONT VIEW

12177-71	1	WIRE ASS'Y.	
#6-32	8	3/8 L.	RD.HD. MACH. SCREW.
AN3022-2	2	SWITCH.	
	2	TYPE "PSM10" CIRCUIT PROTECTOR PURCH. SPENCER THERMOSTAT CO.	
12807	1	PANEL	
12177-32	2	WIRE ASS'Y.	
10438	1	JUMPER	
PART No.	No. REQ.	SIZE / MATERIAL	DESCRIPTION

SCALE FULL SIZE — TOTAL WT.–LBS.

FINISH–PIPER SPECIFICATION #10

MANUFACTURING PRACTICES–PIPER SPECIFICATION #9

LET.	REVISION	DATE	BY

MODEL	PER PLANE	NEXT ASSEMBLY	SUPERSEDES	SUP. BY

THIS DRAWING IS THE PROPERTY OF THE PIPER AIRCRAFT CORP. AND ITS POSSESSION BY UNAUTHORIZED PERSONS SHALL NOT BE CONSTRUED AS PERMISSION TO REPRODUCE FOR SALE, IN WHOLE OR IN PART, ANY DEVICES SHOWN THEREON.

PIPER AIRCRAFT CORP.
LOCK HAVEN, PENNA.

PANEL ASSEMBLY– LANDING LIGHT SWITCH

DRAFTSMAN	CHECKER	STANDARDS
J.S.O. 1-23-50	C.E.K. 1-25-50	

12812

546

A 546

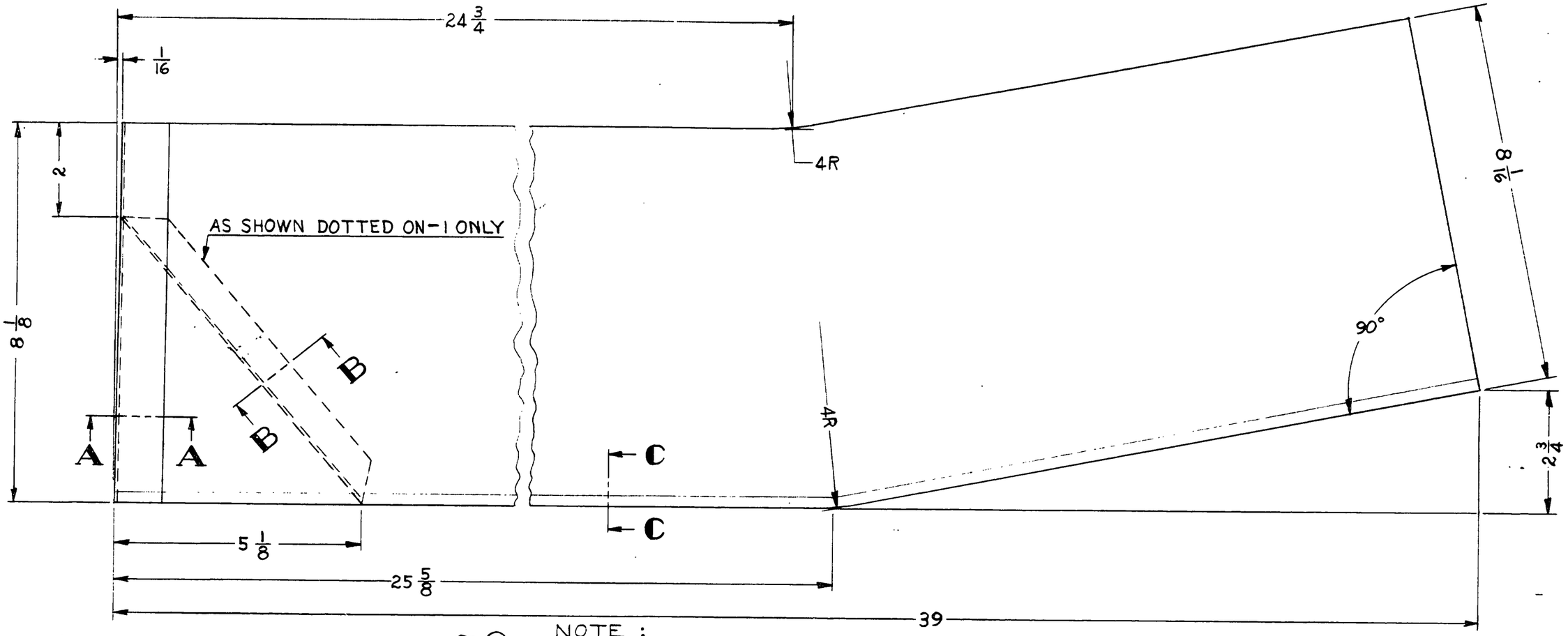

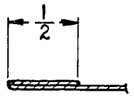

SECTION A-A
FULL SIZE

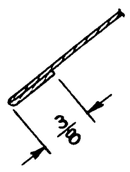

SECTION B-B
FULL SIZE

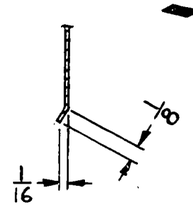

SECTION C-C
FULL SIZE

NOTE :

1. SPRAY NEAR SIDE WITH SOUND DEADENER
"A-31 PURCH. NOX-RUST CHEMICAL CORP.
12818 SHOWN
12818-1 OPPOSITE EXCEPT AS NOTED.

LET.	REVISION	DATE	BY
A	NOTE 1 ADDED	12-13-50	FCS

MODEL	PER PLANE	NEXT ASSEMBLY	SUPERSEDES	SUP. BY

THIS DRAWING IS THE PROPERTY OF THE PIPER AIRCRAFT CORP. AND ITS POSSESSION BY UNAUTHORIZED PERSONS SHALL NOT BE CONSTRUED AS PERMISSION TO REPRODUCE FOR SALE, IN WHOLE OR IN PART. ANY DEVICES SHOWN THEREON.

PIPER AIRCRAFT CORP.
LOCK HAVEN, PENNA.

PART No.	No. REQ.	SIZE	MATERIAL
		.020×10 5/8×39 1/2	3S-1/2 H. ALUM.

SCALE 6 IN.=1 FT. & NOTED — TOTAL WT.-LBS.
FINISH—PIPER SPECIFICATION #10
MANUFACTURING PRACTICES—PIPER SPECIFICATION #9

PANEL-FUSELAGE TRIM

DRAFTSMAN	CHECKER	STANDARDS
C. E. K. 3-15-50	H. R. K. 3-27-50	

12818

547

A547

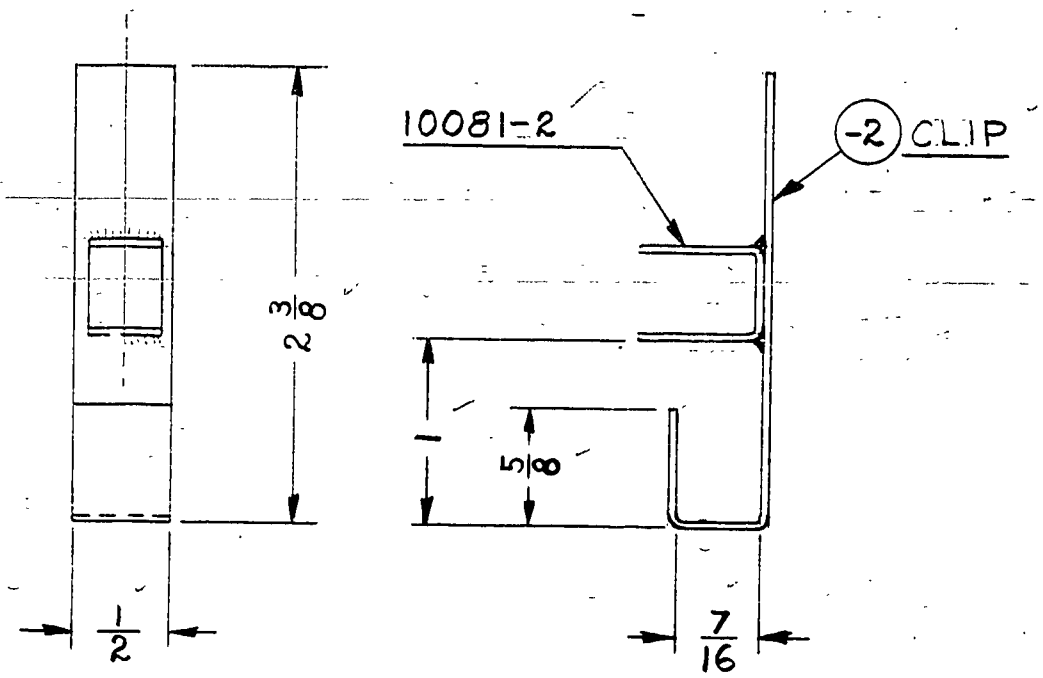

10081-2	1	CLIP	
-2	1	.032×½×3 7/16	*1025 STEEL
PART No.	No. REQ.	SIZE	DESCRIPTION MATERIAL

SCALE FULL SIZE | TOTAL WT.–LBS.

FINISH–PIPER SPECIFICATION #10

MANUFACTURING PRACTICES–PIPER SPECIFICATION #9

CLIP ASSEMBLY– FUEL LINE

LET.	REVISION	DATE	BY

MODEL	PER PLANE	NEXT ASSEMBLY	SUPERSEDES	SUP. BY

THIS DRAWING IS THE PROPERTY OF THE PIPER AIRCRAFT CORP. AND ITS POSSESSION BY UNAUTHORIZED PERSONS SHALL NOT BE CONSTRUED AS PERMISSION TO REPRODUCE FOR SALE, IN WHOLE OR IN PART, ANY DEVICES SHOWN THEREON.

PIPER AIRCRAFT CORP.
LOCK HAVEN, PENNA.

C. E. K.	H. R. K.		12834
2-16-50	2-24-48		
DRAFTSMAN	CHECKER	STANDARDS	

A 143

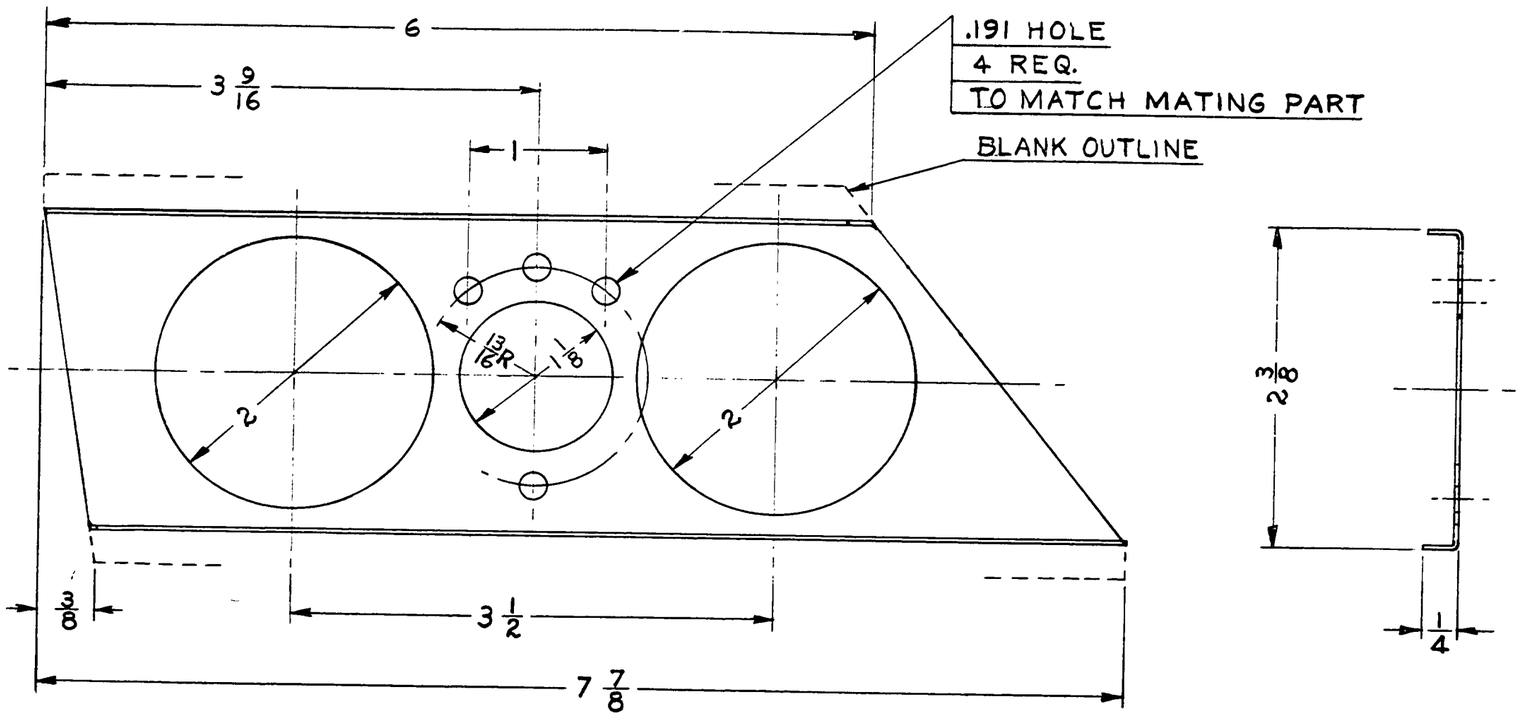

LET.	REVISION	DATE	BY

MODEL	PER PLANE	NEXT ASSEMBLY	SUPERSEDES	SUP. BY

THIS DRAWING IS THE PROPERTY OF THE PIPER AIRCRAFT CORP. AND ITS POSSESSION BY UNAUTHORIZED PERSONS SHALL NOT BE CONSTRUED AS PERMISSION TO REPRODUCE FOR SALE, IN WHOLE OR IN PART, ANY DEVICES SHOWN THEREON.

PIPER AIRCRAFT CORP.
LOCK HAVEN, PENNA.

PART NO.	No. REQ.	SIZE	DESCRIPTION / MATERIAL
		.032×2 7/8×7 7/8	#1025 STEEL

SCALE FULL SIZE — TOTAL WT.—LBS.

FINISH—PIPER SPECIFICATION #10

MANUFACTURING PRACTICES—PIPER SPECIFICATION #9

PLATE-FUEL VALVE MOUNTING

DRAFTSMAN	CHECKER	STANDARDS
C. E. K. 2-16-50	H. R. K. 2-24-48	

12835

548

A548

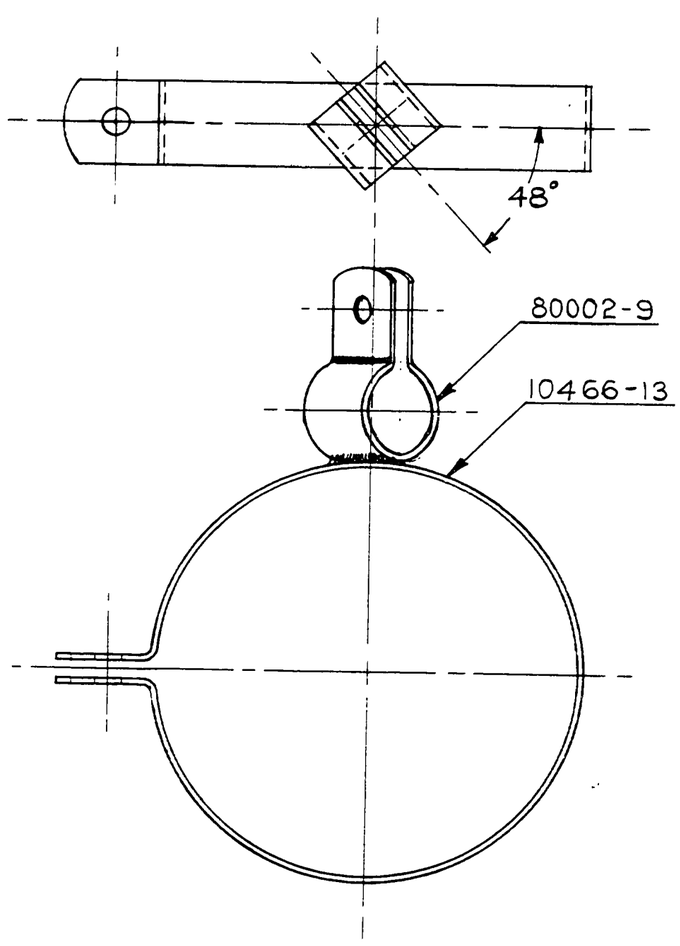

-2 CLAMP ASSEMBLY

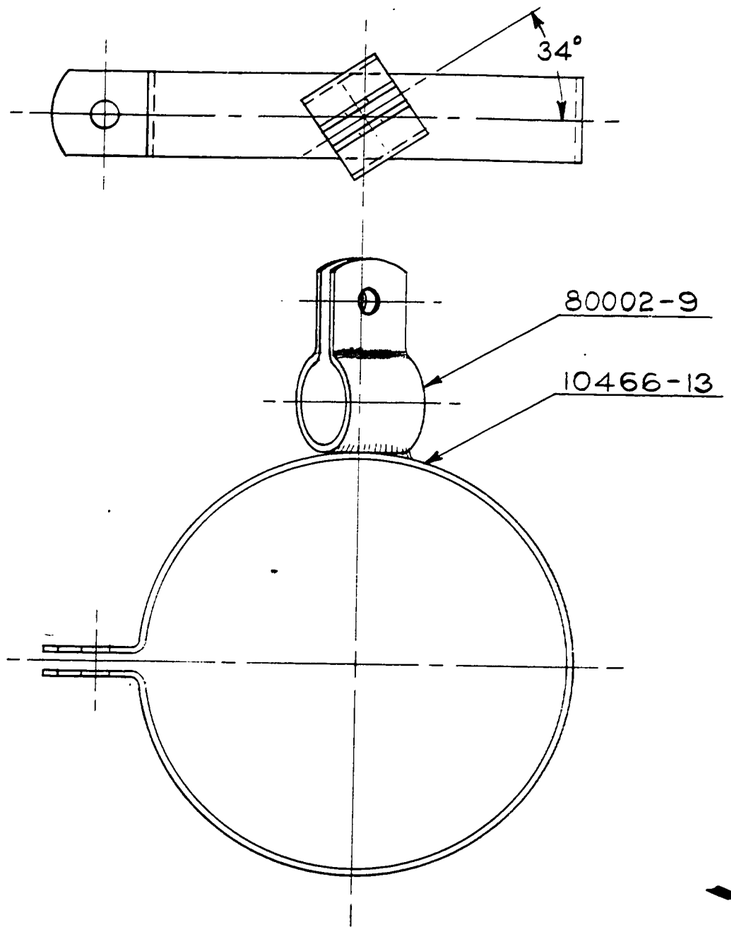

-3 CLAMP ASSEMBLY

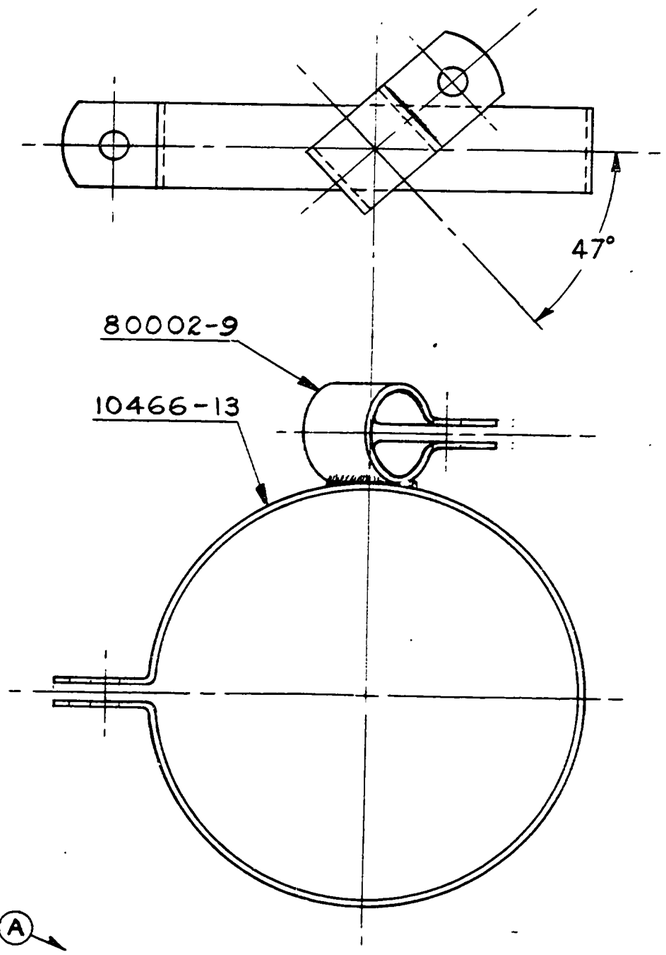

-4 CLAMP ASSEMBLY

PART No.	No. REQ.	NAME / MATERIAL
80002-9	1	CLAMP
10466-13	1	CLAMP

SCALE FULL SIZE | TOTAL WT.–LBS.

FINISH–PIPER SPECIFICATION #10

MANUFACTURING PRACTICES–PIPER SPECIFICATION #9

MODEL	PER PLANE	NEXT ASSEMBLY	SUPERSEDES	SUP. BY

THIS DRAWING IS THE PROPERTY OF THE PIPER AIRCRAFT CORP. AND ITS POSSESSION BY UNAUTHORIZED PERSONS SHALL NOT BE CONSTRUED AS PERMISSION TO REPRODUCE FOR SALE, IN WHOLE OR IN PART. ANY DEVICES SHOWN THEREON.

LET.	REVISION	DATE	BY
A	-4 ADDED	3-21-51	C.K.

PIPER AIRCRAFT CORP.
LOCK HAVEN, PENNA.

CLAMP ASSEMBLY – HEADER TANK

DRAFTSMAN	CHECKER	STANDARDS
H.R.K. 2-16-50	J.C.B. 2-27-50	

12836

549

A 549

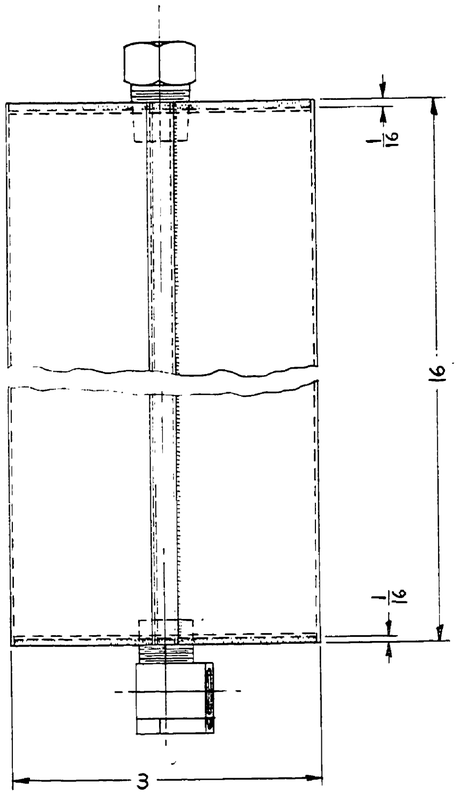

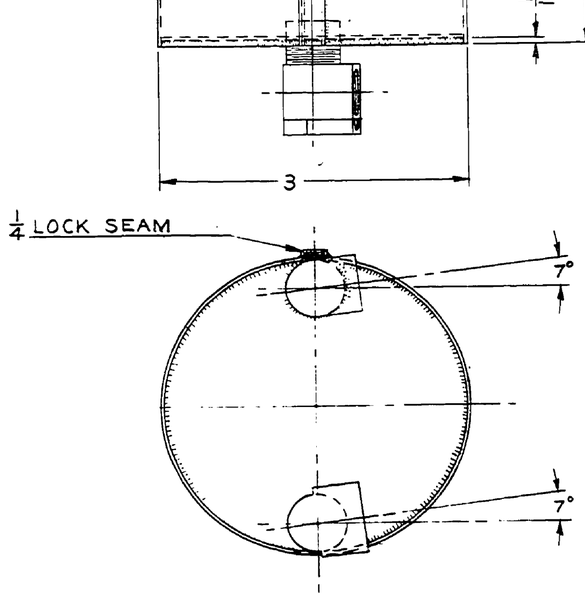

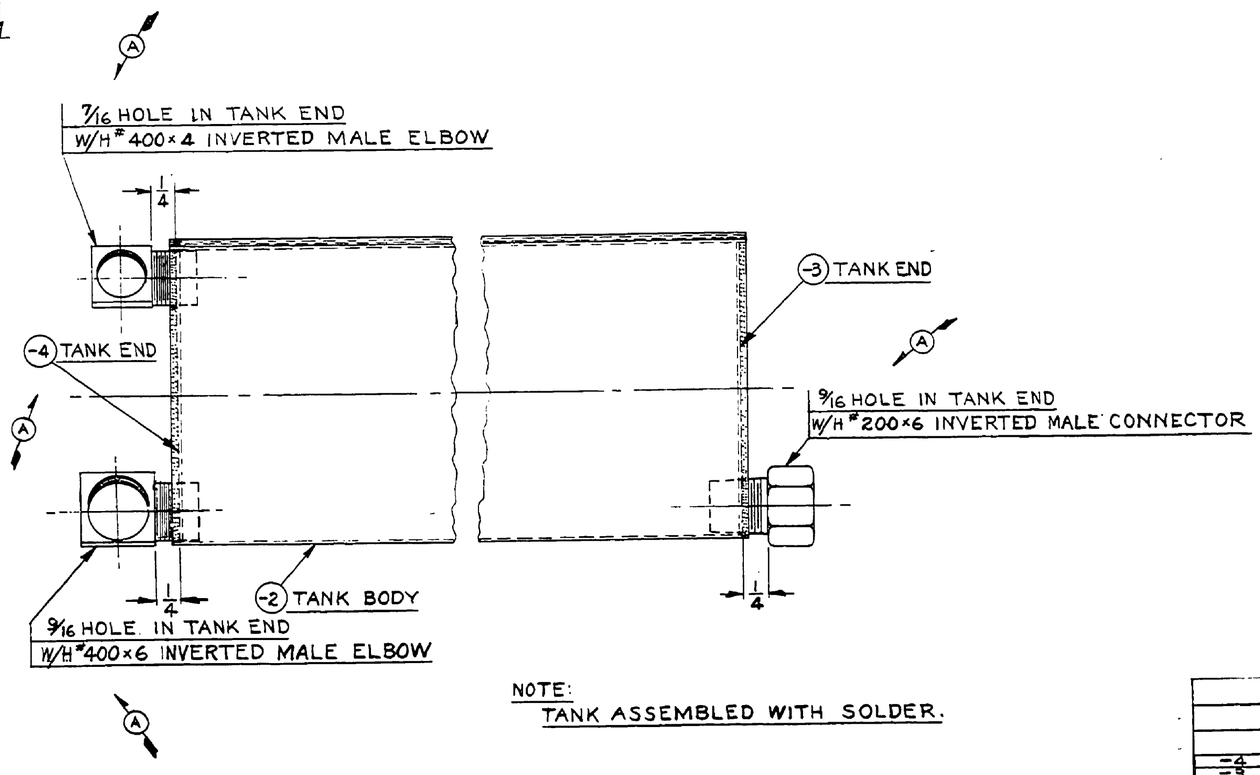

NOTE:
TANK ASSEMBLED WITH SOLDER.

PART NO.	NO. REQ.	SIZE	DESCRIPTION / MATERIAL
	1	W/H #400×4	INVERTED MALE ELBOW
	1	W/H #400×6	INVERTED MALE ELBOW
	1	W/H #200×6	INVERTED MALE CONNECTOR
-4	1	.012×2 13/16 DIA.	ST. STEEL, TYPE 302,
-3	1	.012×10 3/16×16	ANNEALED, 2D FINISH
-2	1		

SCALE FULL SIZE — TOTAL WT.–LBS.
FINISH–PIPER SPECIFICATION #10
MANUFACTURING PRACTICES–PIPER SPECIFICATION #9

THIS DRAWING IS THE PROPERTY OF THE PIPER AIRCRAFT CORP. AND ITS POSSESSION BY UNAUTHORIZED PERSONS SHALL NOT BE CONSTRUED AS PERMISSION TO REPRODUCE FOR SALE, IN WHOLE OR IN PART, ANY DEVICES SHOWN THEREON

LET.	REVISION	DATE	BY
A	-4 WAS -3; 7/16 & 9/16 HOLES ADDED	3-31-50	C.K.

MODEL	PER PLANE	NEXT ASSEMBLY	SUPERSEDES	SUP. BY

PIPER AIRCRAFT CORP.
LOCK HAVEN, PENNA.

TANK ASSEMBLY–
HEADER

DRAFTSMAN	CHECKER	STANDARDS
C. E. K. 2-17-50	H. R. K. 2-24-50	

12837

A771

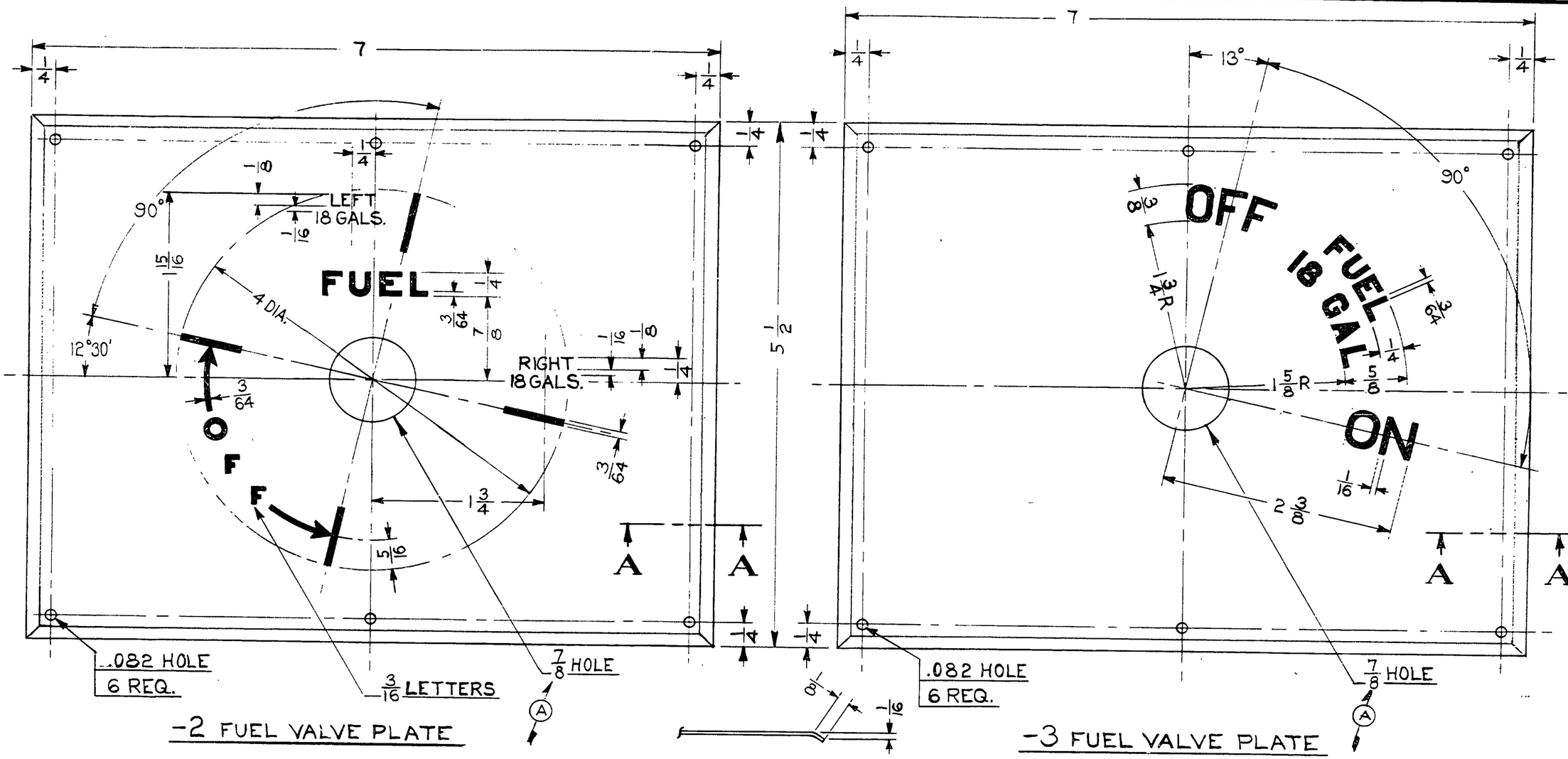

PART NO.	No. REQ.	SIZE	DESCRIPTION / MATERIAL
12838-3	—	.032 x 5½ x 7	3S-½ H. ALUM.
12838-2	—	.032 x 5½ x 7	3S-½ H. ALUM.

SCALE FULL SIZE — TOTAL WT.—LBS.

FINISH—PIPER SPECIFICATION #10

MANUFACTURING PRACTICES—PIPER SPECIFICATION #9

PLATE-FUEL VALVE

MODEL	PER PLANE	NEXT ASSEMBLY	SUPERSEDES	SUP. BY

THIS DRAWING IS THE PROPERTY OF THE PIPER AIRCRAFT CORP. AND ITS POSSESSION BY UNAUTHORIZED PERSONS SHALL NOT BE CONSTRUED AS PERMISSION TO REPRODUCE FOR SALE, IN WHOLE OR IN PART, ANY DEVICES SHOWN THEREON.

LET.	REVISION	DATE	BY
A	7/8 HOLE WAS 1¼ HOLE FOR -2 & -3	11-3-50	K.D.

PIPER AIRCRAFT CORP.
LOCK HAVEN, PENNA.

DRAFTSMAN	CHECKER	STANDARDS
H.R.K. 2-21-50	J.C.S. 2-27-50	

12838

550

A 550

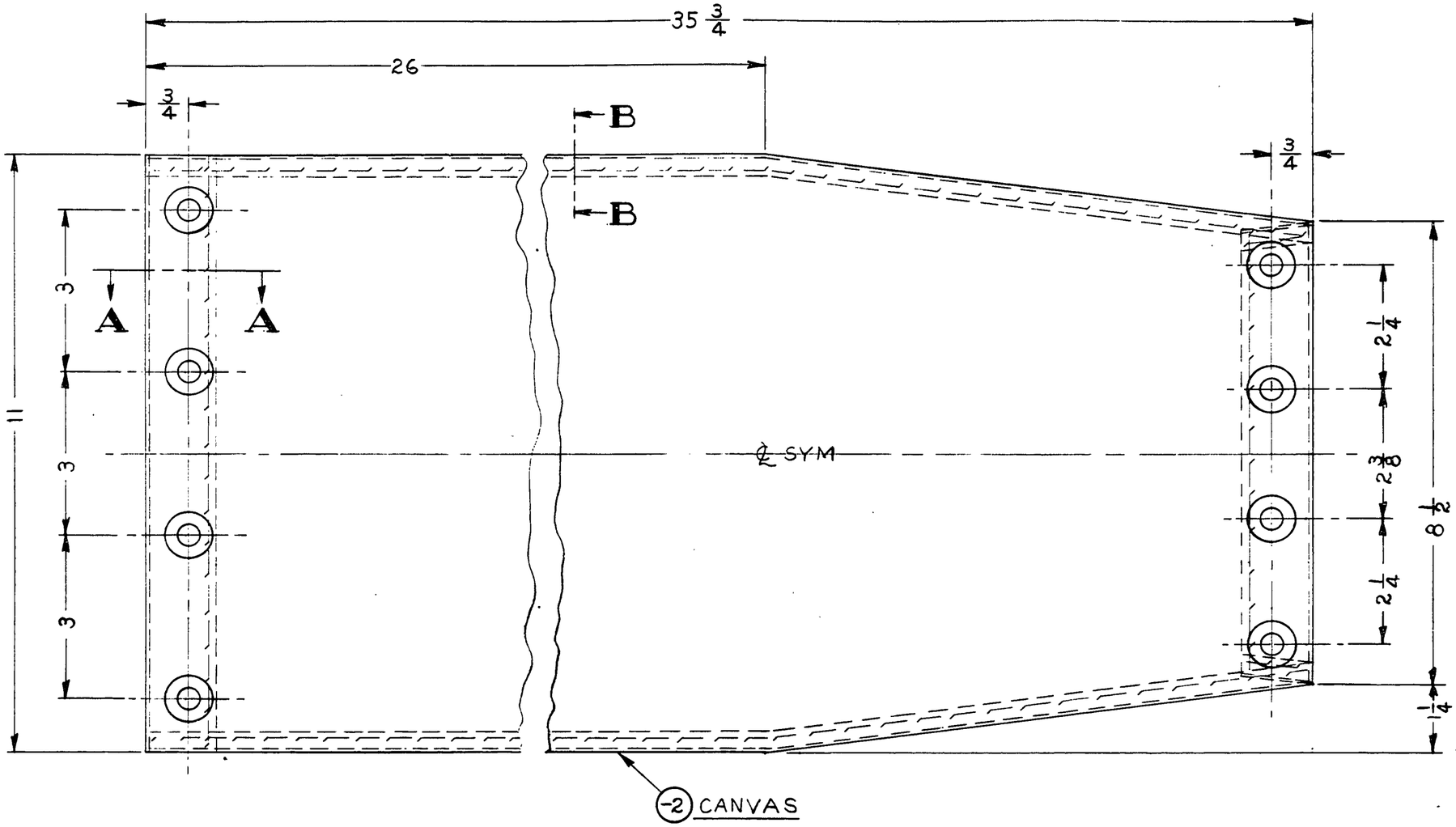

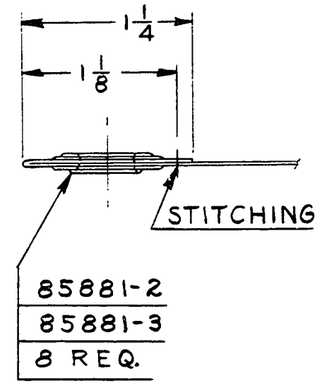

SECTION A-A
FULL SIZE

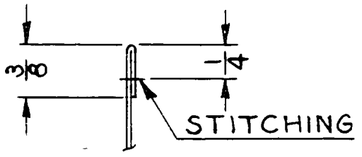

SECTION B-B
FULL SIZE

	1	292 IN. L.	#20-4 SILK FIN. BLK. THD.
85881-3	8	WASHER	
85881-2	8	GROMMET	
-2	1	11 3/4 × 38 1/4	12 OZ. CANVAS
PART No.	No. REQ.	SIZE	DESCRIPTION MATERIAL

SCALE 6 IN. = 1 FT. & NOTED — TOTAL WT.—LBS.

FINISH—PIPER SPECIFICATION #10

MANUFACTURING PRACTICES—PIPER SPECIFICATION #9

CANVAS ASSEMBLY— SEAT BACK.

LET.	REVISION	DATE	BY

MODEL | PER PLANE | NEXT ASSEMBLY | SUPERSEDES | SUP. BY

THIS DRAWING IS THE PROPERTY OF THE PIPER AIRCRAFT CORP. AND ITS POSSESSION BY UNAUTHORIZED PERSONS SHALL NOT BE CONSTRUED AS PERMISSION TO REPRODUCE FOR SALE, IN WHOLE OR IN PART, ANY DEVICES SHOWN THEREON.

PIPER AIRCRAFT CORP.
LOCK HAVEN, PENNA.

DRAFTSMAN	CHECKER	STANDARDS	
C. E. K. 2-16-50	H. R. K. 2-28-50		12839

12839 551

A 551

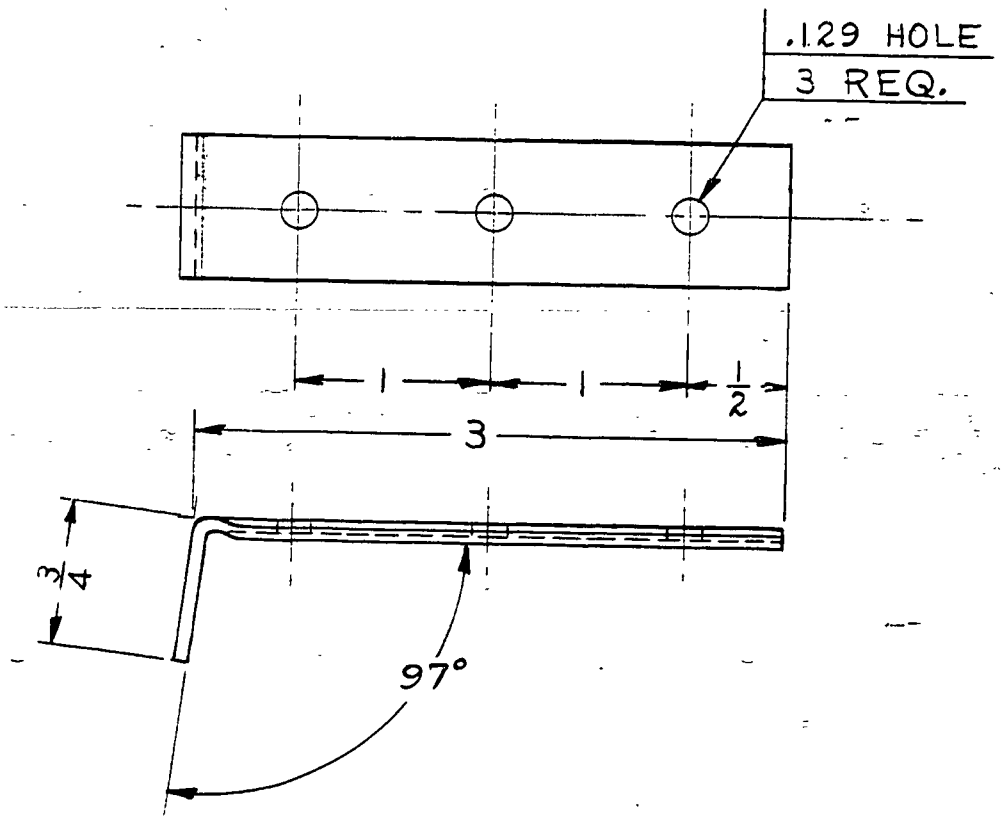

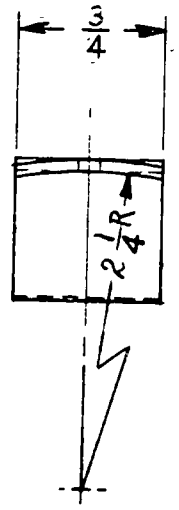

LET.	REVISION	DATE	BY

MODEL	PER PLANE	NEXT ASSEMBLY	SUPERSEDES	SUP. BY

THIS DRAWING IS THE PROPERTY OF THE PIPER AIRCRAFT CORP. AND ITS POSSESSION BY UNAUTHORIZED PERSONS SHALL NOT BE CONSTRUED AS PERMISSION TO REPRODUCE FOR SALE, IN WHOLE OR IN PART, ANY DEVICES SHOWN THEREON.

PIPER AIRCRAFT CORP.
LOCK HAVEN, PENNA.

PART No.	No. REQ.	SIZE	DESCRIPTION / MATERIAL
		.062 × 3/4 × 3 3/4	#1025 STEEL

SCALE FULL SIZE — TOTAL WT.–LBS.

FINISH–PIPER SPECIFICATION #10

MANUFACTURING PRACTICES–PIPER SPECIFICATION #9

ANGLE – FUSELAGE COWL REINFORCEMENT

DRAFTSMAN	CHECKER	STANDARDS
C. E. K. 2-28-50	H. R. K. 3-1-50	

12840

144

A144

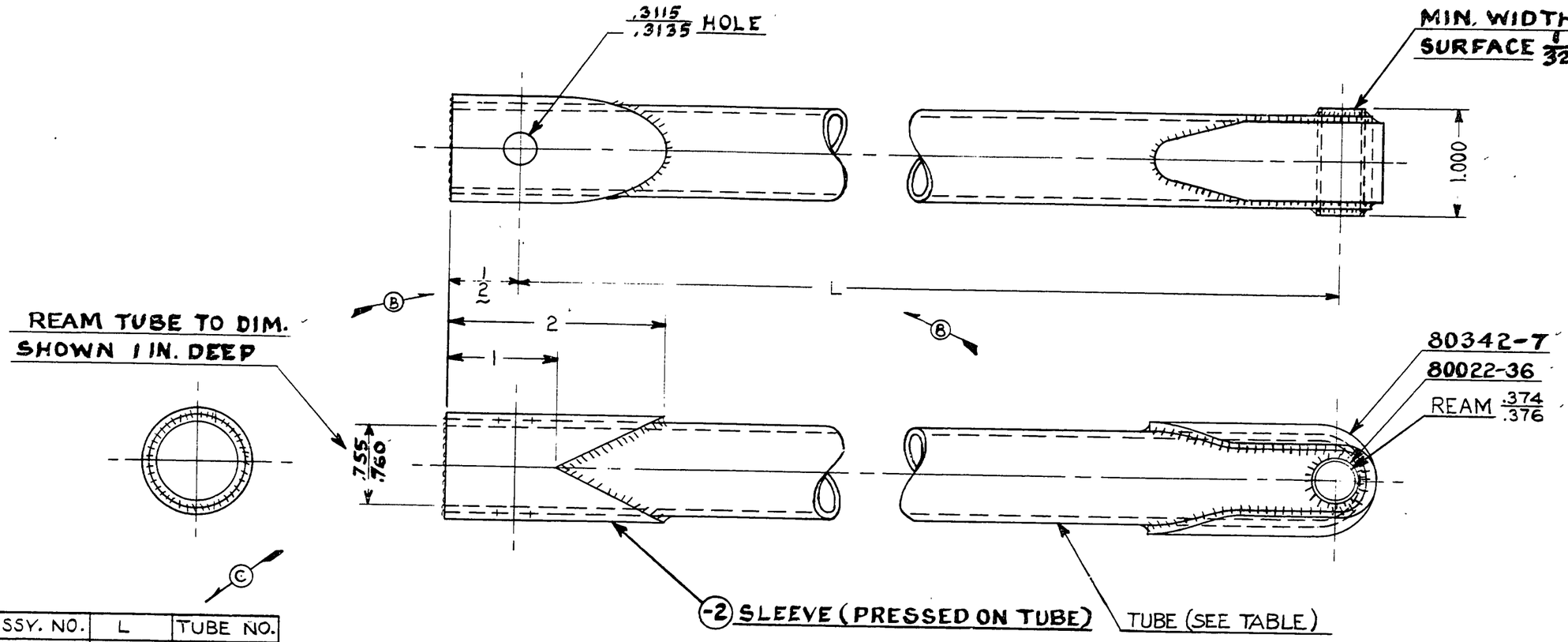

ASSY. NO.	L	TUBE NO.
12844	15 5/16	31371-2
12844-3	15 13/16	31371-3

PART No.	No. REQ.	SIZE	DESCRIPTION
80342-7	1		STRAP
80022-36	1		BUSHING
SEE TABLE	1		TUBE
-2	1	1 x .083 x 2	4130 SEAMLESS STL. TUBE

MATERIAL

SCALE FULL SIZE — TOTAL WT.—LBS.

FINISH—PIPER SPECIFICATION #10

MANUFACTURING PRACTICES—PIPER SPECIFICATION #9

LET.	REVISION	DATE	BY
C	-3 & TABLE ADDED	9-7-50	FCS
B	15 5/16 WAS 15 13/16 ; 1/2 WAS 5/8	4-14-50	HRK
A	SEAMLESS STL. TUBE WAS STL. TUBE	4-12-50	C.K.

MODEL	PER PLANE	NEXT ASSEMBLY	SUPERSEDES	SUP. BY

THIS DRAWING IS THE PROPERTY OF THE PIPER AIRCRAFT CORP. AND ITS POSSESSION BY UNAUTHORIZED PERSONS SHALL NOT BE CONSTRUED AS PERMISSION TO REPRODUCE FOR SALE, IN WHOLE OR IN PART. ANY DEVICES SHOWN THEREON.

PIPER AIRCRAFT CORP.
LOCK HAVEN, PENNA.

TUBE ASSEMBLY-SHOCK STRUT

DRAFTSMAN	CHECKER	STANDARDS
W.R.K. 3-2-50	C.E.K. 3-3-50	

12844

552

A552

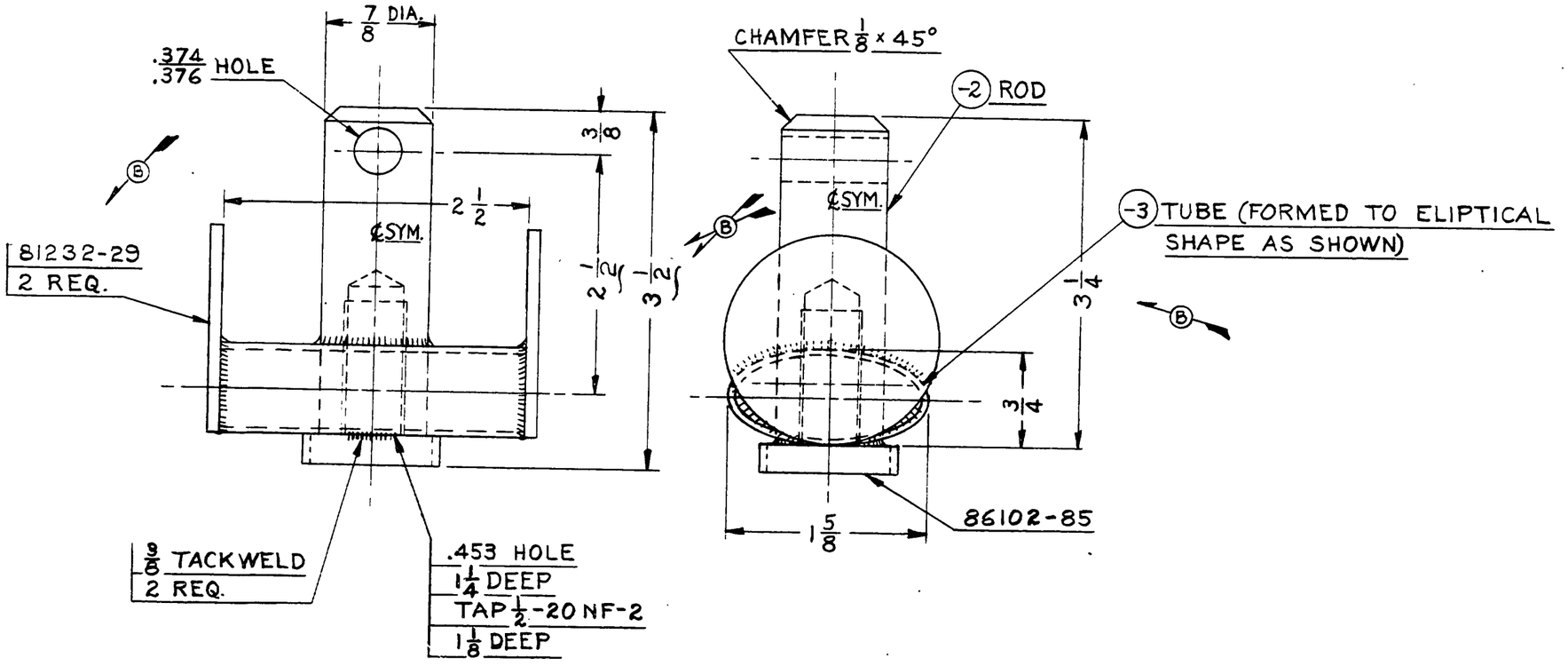

PART No.	No. REQ.	SIZE	DESCRIPTION MATERIAL
86102-85	1		BUSHING
81232-29	2		DISC
-3	1	1 1/4 x .058 x 2 1/2	#4130 STL. TUBE
-2	1	7/8 DIA. x 3 1/4	C. F. STL. ROD

SCALE FULL SIZE — TOTAL WT.—LBS.

FINISH—PIPER SPECIFICATION #10

MANUFACTURING PRACTICES—PIPER SPECIFICATION #9

FITTING ASSEMBLY— SHOCK STRUT END

LET.	REVISION	DATE	BY
B	3 1/2 WAS 3; 2 1/2 WAS 2; 3 1/4 WAS 2 3/4; 81232-29 WAS 12846	4-14-50	HRK
A	C.F. STL. ROD WAS #1025 STL. ROD	4-12-50	C.K.

MODEL	PER PLANE	NEXT ASSEMBLY	SUPERSEDES	SUP. BY

THIS DRAWING IS THE PROPERTY OF THE PIPER AIRCRAFT CORP. AND ITS POSSESSION BY UNAUTHORIZED PERSONS SHALL NOT BE CONSTRUED AS PERMISSION TO REPRODUCE FOR SALE, IN WHOLE OR IN PART. ANY DEVICES SHOWN THEREON.

PIPER AIRCRAFT CORP.
LOCK HAVEN, PENNA.

DRAFTSMAN	CHECKER	STANDARDS
C. E. K. 3-3-50	H. R. K. 3-3-50	

12845

553

A553

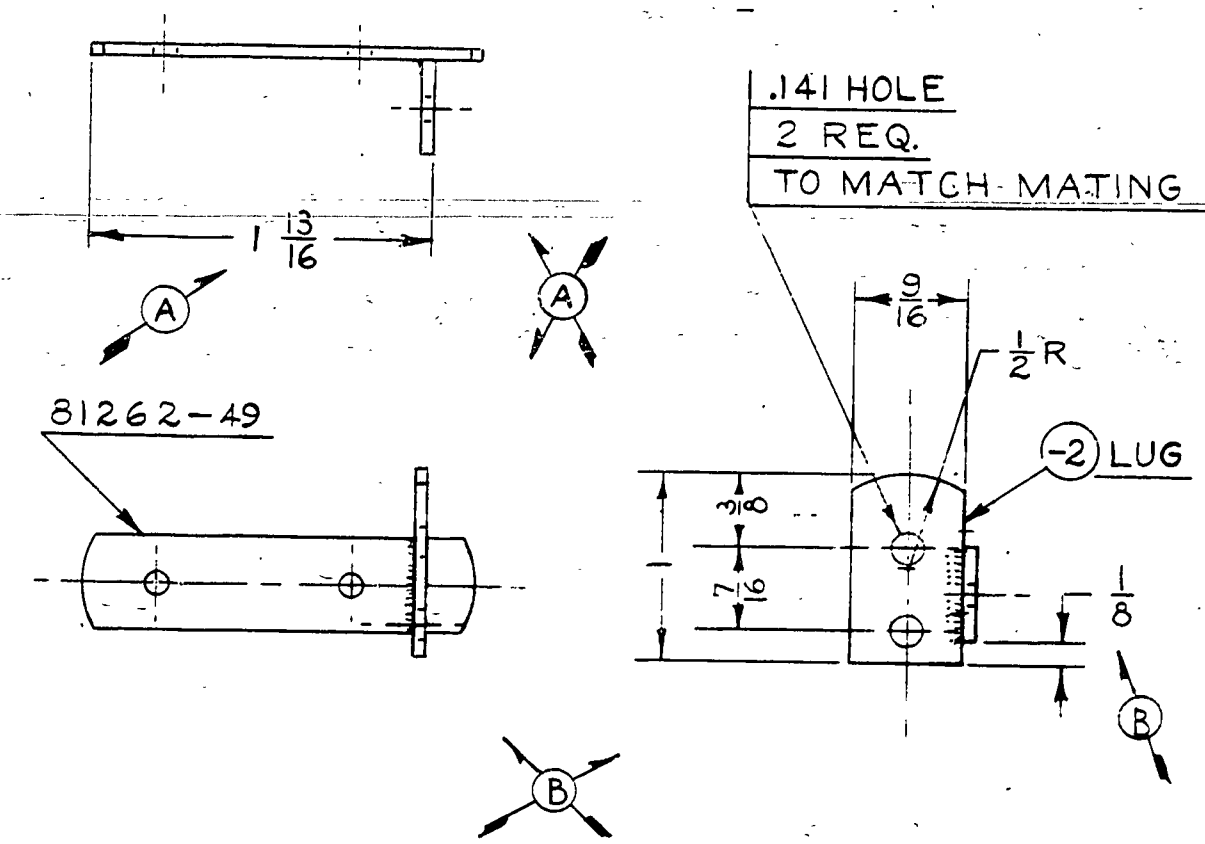
1 13/16
A
A
81262-49
B
.141 HOLE
2 REQ.
TO MATCH MATING PART
9/16
1/2 R
-2 LUG
3/8
7/16
1/8
B

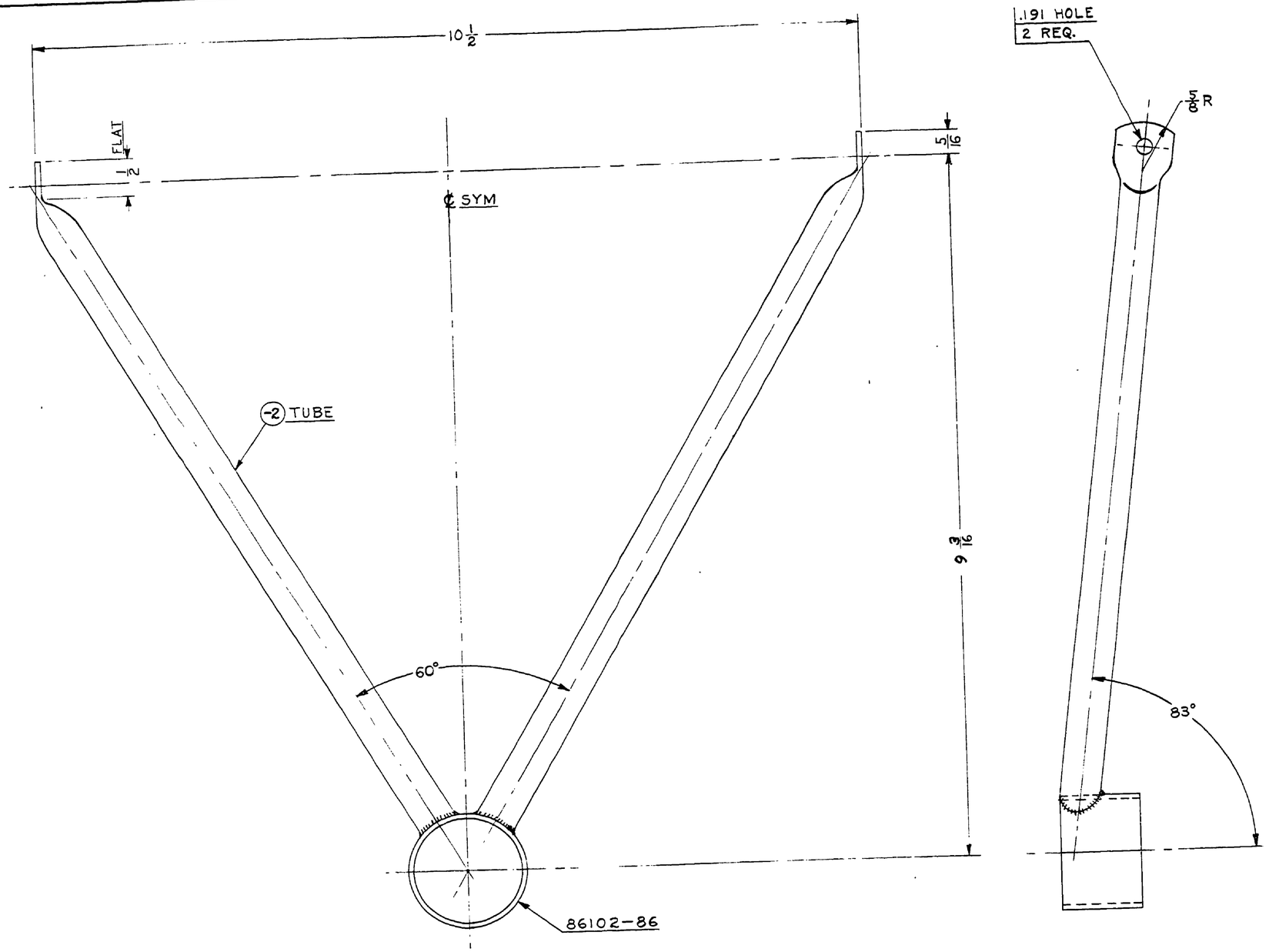

THIS DRAWING IS THE PROPERTY OF THE PIPER AIRCRAFT CORP. AND ITS POSSESSION BY UNAUTHORIZED PERSONS SHALL NOT BE CONSTRUED AS PERMISSION TO REPRODUCE FOR SALE, IN WHOLE OR IN PART, ANY DEVICES SHOWN THEREON

LET.	REVISION	DATE	BY

MODEL	PER PLANE	NEXT ASSEMBLY	SUPERSEDES	SUP. BY

PIPER AIRCRAFT CORP.
LOCK HAVEN, PENNA.

PART No.	No. REQ.	SIZE	MATERIAL / DESCRIPTION
86102-86	1		BUSHING
-2	2	1/2 x .028 x 9 7/8	*1025 STL. TUBE

SCALE FULL SIZE — TOTAL WT.—LBS.

FINISH—PIPER SPECIFICATION #10

MANUFACTURING PRACTICES—PIPER SPECIFICATION #9

LOCK ASSEMBLY—
CONTROL STICK.

DRAFTSMAN	CHECKER	STANDARDS
C. E. K. 3-16-50	H. R. K. 3-21-50	

12855

772

A772

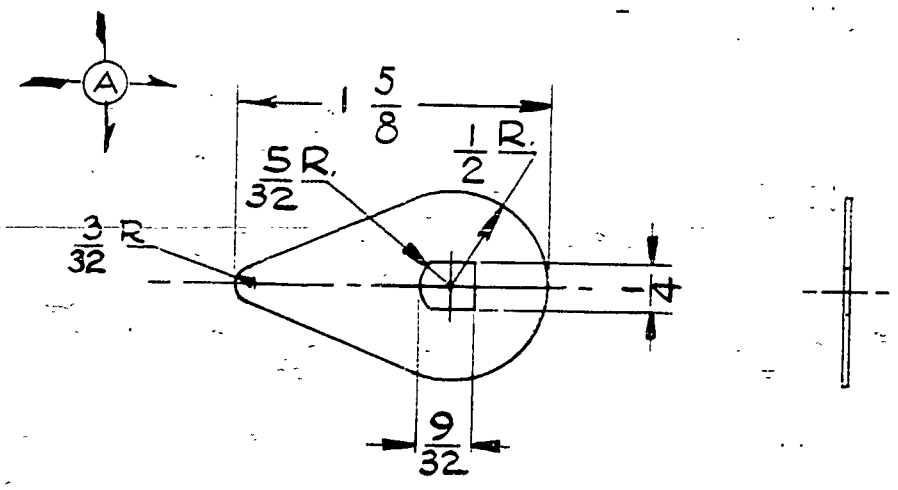

PART No.	No. REQ.	SIZE	DESCRIPTION
		.032×1×1 5/8	35½H ALUM.
		MATERIAL	

SCALE FULL SIZE | TOTAL WT.–LBS.

FINISH–PIPER SPECIFICATION #10

MANUFACTURING PRACTICES–PIPER SPECIFICATION #9

POINTER - FUEL VALVE

MODEL	PER PLANE	NEXT ASSEMBLY	SUPERSEDES	SUP. BY

THIS DRAWING IS THE PROPERTY OF THE PIPER AIRCRAFT CORP. AND ITS POSSESSION BY UNAUTHORIZED PERSONS SHALL NOT BE CONSTRUED AS PERMISSION TO REPRODUCE FOR SALE, IN WHOLE OR IN PART. ANY DEVICES SHOWN THEREON.

LET.	REVISION	DATE	BY
A	15/16 WAS 13/4, 3/32 R ADDED	10-31-50	K.D.

PIPER AIRCRAFT CORP.
LOCK HAVEN, PENNA.

DRAFTSMAN	CHECKER	STANDARDS
Cattoni 3-21-50	H.R.K. 3-22-50	

12857

146

A 146

WAS J2-811

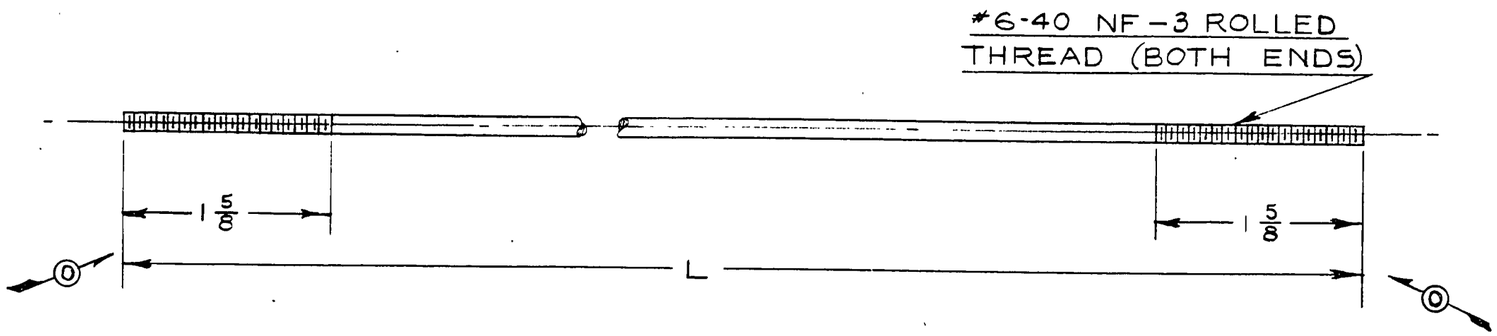

PART NO.	L	MODEL	PER PLANE	NEXT ASSEMBLY	OLD PART NO.	MATERIAL
12861-2	32 3/4	J3	2	12953	J2-811	STAINLESS STEEL, TYPE 302 W, MIN. U.T.S. 120,000 P.S.I.
12861-3	61 11/16	J3	4	14941	J2-812	
12861-4	49 7/8	J3	10	14941	J2-813	
12861-5	49 1/8	J3	2	14941	J2-814	
12861-6	44 7/8	J3	12	14941		
12861-7	56 1/4	J3	4	14941		
12861-8	54 5/8					STAINLESS STEEL, TYPE 302 W, MIN. U.T.S. 140,000 P.S.I.

LET.	REVISION	DATE	BY
P	MATERIAL SPEC. ST. STL. TYPE 302 W WAS SAE #3140 CD. STL. CD. PLATED	3-31-47	T.N.K.
O	1 5/8 WAS 1 1/2; 56 1/4 WAS 56 3/4 FOR -7	2-13-47	C.L.W.
N	MATERIAL SPEC. REV.	10-4-46	E.L.N.
M	REDRAWN & REVISED	8-29-46	I.D.B.

THIS DRAWING IS THE PROPERTY OF THE PIPER AIRCRAFT CORP. AND ITS POSSESSION BY UNAUTHORIZED PERSONS SHALL NOT BE CONSTRUED AS PERMISSION TO REPRODUCE FOR SALE, IN WHOLE OR IN PART. ANY DEVICES SHOWN THEREON.

MODEL	PER PLANE	NEXT ASSEMBLY	SUPERSEDES	SUP. BY
NOTED	NOTED	NOTED		

PIPER AIRCRAFT CORP.
LOCK HAVEN, PENNA.

PART NO.	NO. REQ.	SIZE	DESCRIPTION
		.1195 D x NOTED	NOTED
		MATERIAL	

SCALE FULL SIZE — TOTAL WT.—LBS.
FINISH—PIPER SPECIFICATION #10
MANUFACTURING PRACTICES—PIPER SPECIFICATION #9

WIRES — WING DRAG

DRAFTSMAN	CHECKER	STANDARDS
I. D. B. 8-29-46	R. E. T. 8-29-46	

12861

554

A554

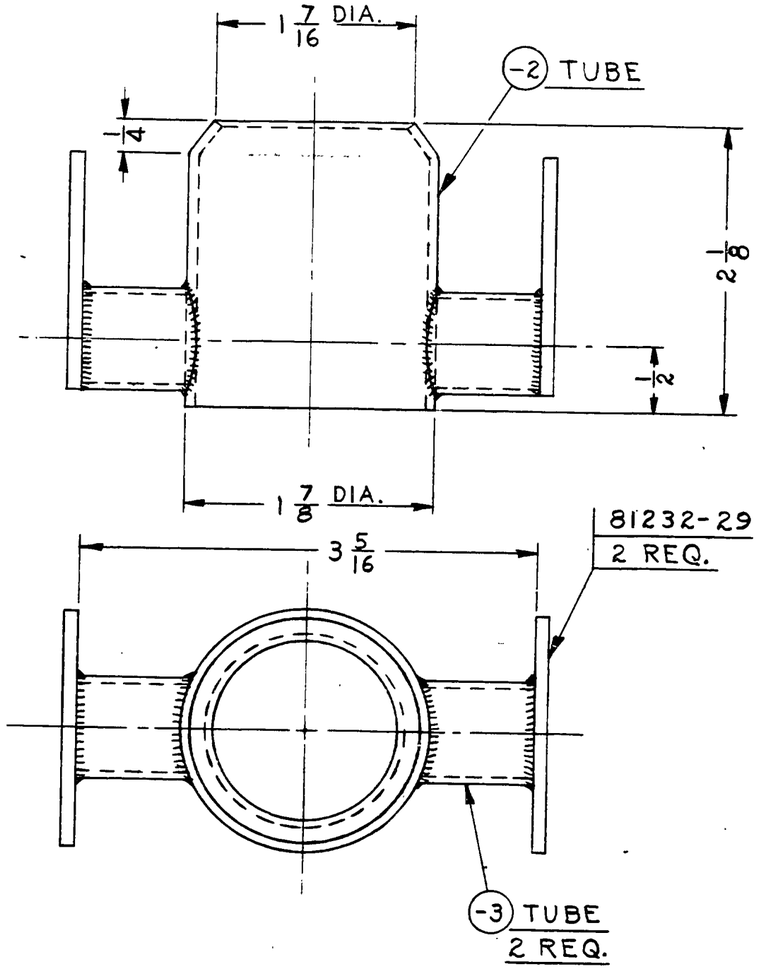

81232-29	2	DISC.							
-3	2	3/4 x .049 x 7/8	*4130 STL. TUBE						
-2	1	1 7/8 x .083 x 2 3/16	*4130 S.S.T.						
PART No.	No. REQ.	SIZE	DESCRIPTION						
		MATERIAL							

SCALE FULL SIZE — TOTAL WT.—LBS.

FINISH—PIPER SPECIFICATION #10

MANUFACTURING PRACTICES—PIPER SPECIFICATION #9

FITTING ASSEMBLY— SHOCK STRUT END

MODEL	PER PLANE	NEXT ASSEMBLY	SUPERSEDES	SUP. BY

THIS DRAWING IS THE PROPERTY OF THE PIPER AIRCRAFT CORP. AND ITS POSSESSION BY UNAUTHORIZED PERSONS SHALL NOT BE CONSTRUED AS PERMISSION TO REPRODUCE FOR SALE, IN WHOLE OR IN PART, ANY DEVICES SHOWN THEREON.

LET.	REVISION	DATE	BY
A	1 7/8 x .083 WAS 1 15/16 x .065	6-6-50	C.K.

PIPER AIRCRAFT CORP.
LOCK HAVEN, PENNA.

DRAFTSMAN	CHECKER	STANDARDS
C.E.K. 4-3-50	H.R.K. 4-19-50	

12875

555

A555

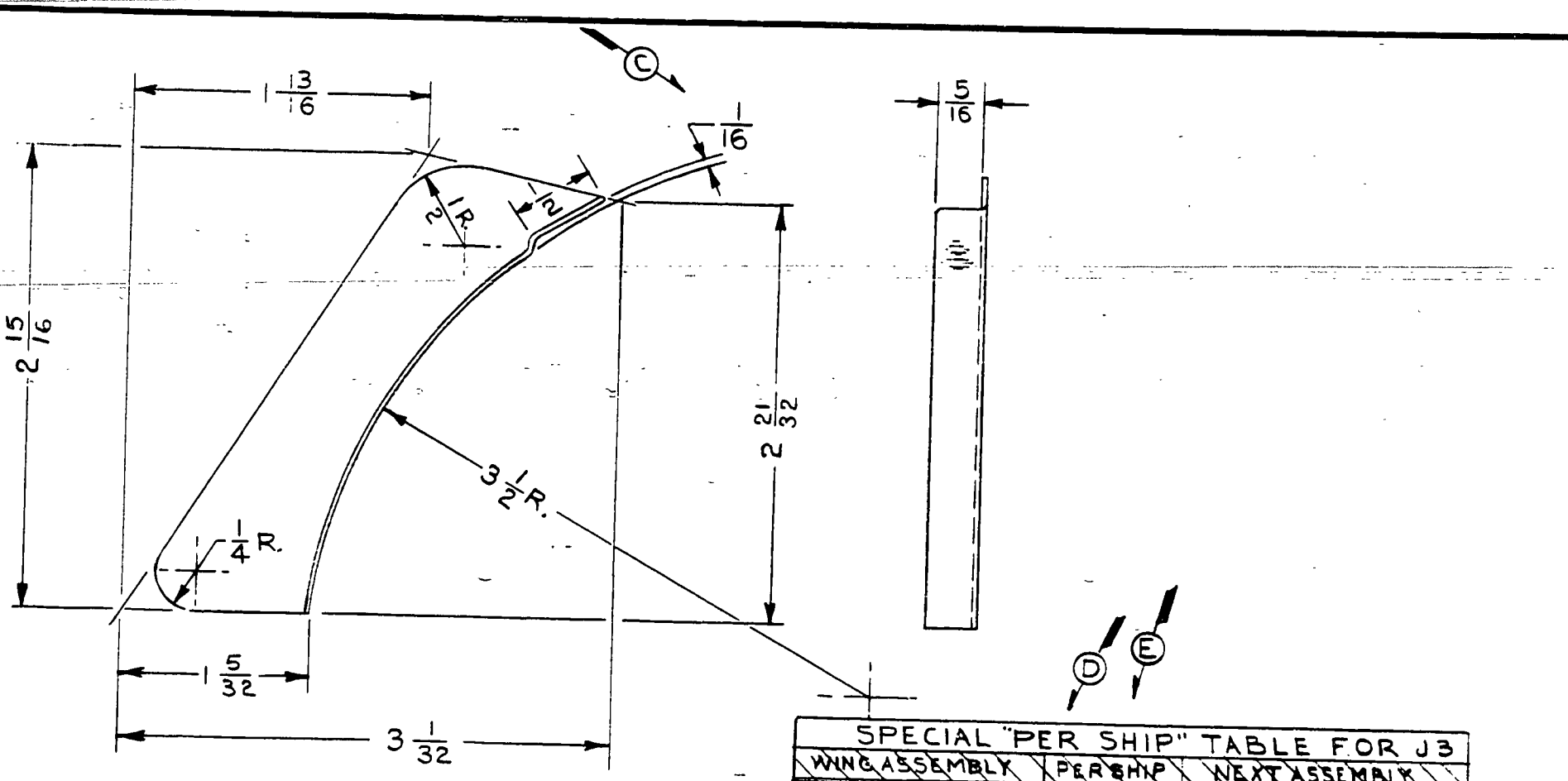

SPECIAL "PER SHIP" TABLE FOR J3		
WING ASSEMBLY	PER SHIP	NEXT ASSEMBLY
WOOD SPAR WING	24 OF -2	13042, 13131, 12902, 13022
METAL SPAR WING	26 OF -2	13042, 12902, 13022, 14541

12881-2 L.H. SHOWN

12881-3 R.H. OPPOSITE

NOTE:

ALL BEND RADII 1/32 UNLESS OTHERWISE NOTED.

LET	REVISION	DATE	BY
F	REDRAWN WITHOUT CHANGE	6-11-51	I.M.M.
E	26 OF -2 WAS 26 OF-3 FOR METAL SPAR	5-10-45	I.D.B.
D	METAL SPAR REF. ADDED FOR J3	11-4-43	R.E.T.
C	1/16 WAS .063	8-7-43	I.D.B.
B	REDRAWN & REVISED	4-28-43	C.K

MODEL	PER PLANE	NEXT ASSEMBLY	SUPERSEDES	SUP. BY
J3	SEE TABLE	SEE TABLE		
J3, TG-8, L-4A, L-4B	2 OF-3	13042, 12902		
TG-8, L-4A, L-4B	2 OF-2	13042, 13131, 12902, 13022		

THIS DRAWING IS THE PROPERTY OF THE PIPER AIRCRAFT CORP. AND ITS POSSESSION BY UNAUTHORIZED PERSONS SHALL NOT BE CONSTRUED AS PERMISSION TO REPRODUCE FOR SALE IN WHOLE OR IN PART ANY DEVICES SHOWN THEREON.

PIPER AIRCRAFT CORP.
LOCK HAVEN, PENNA.

PART NO.	NO. REQ.	SIZE	MATERIAL
		.025 x 1 3/8 x 4	3 S - 1/2 H. ALUM.

SCALE FULL SIZE | TOTAL WT.—LBS.

FINISH—PIPER SPECIFICATION # 10

MANUFACTURING PRACTICES—PIPER SPECIFICATION # 9

FORMER—WING RIB
AILERON FALSE SPAR

C.K.	L.E.K.		12881
4-28-43	4-28-43		
DRAFTSMAN	CHECKER	STANDARDS	

197

A147

ASS'Y. NO.	WIRE ASS'Y. NO.	REMARKS
12898-2	10128-73	

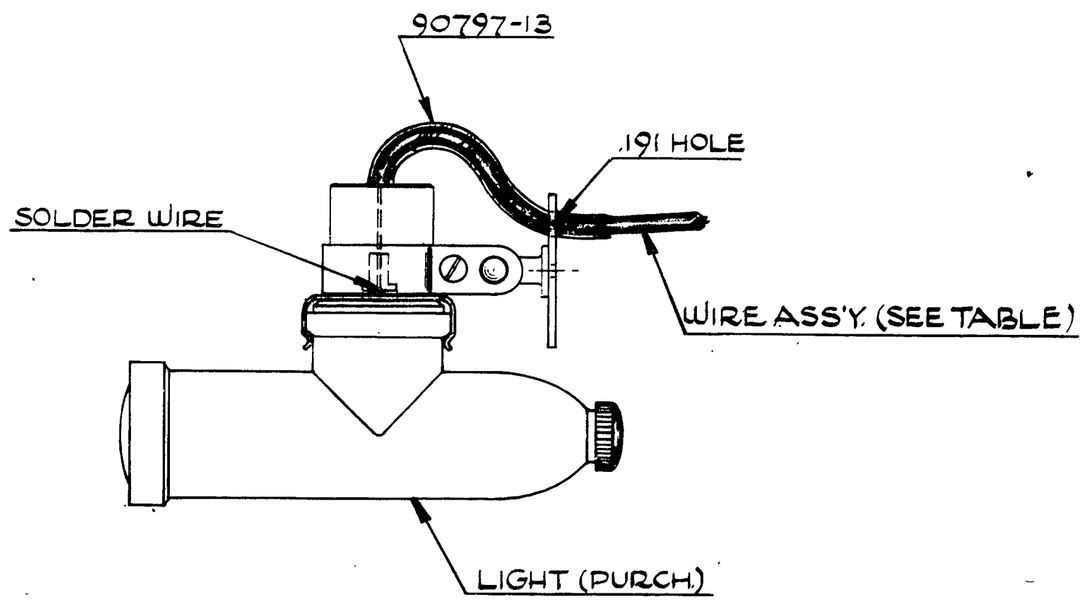

PART No.	No. REQ.	SIZE / DESCRIPTION / MATERIAL
	1	GRIMES MODEL J #A1425 13V SPOT-LIGHT (RED LENS) PURCH. GRIMES MFG
90797-13	1	SLEEVE
	1	WIRE ASS'Y. (SEE TABLE)

SCALE FULL SIZE | TOTAL WT.-LBS.

FINISH—PIPER SPECIFICATION #10

MANUFACTURING PRACTICES—PIPER SPECIFICATION #9

MODEL	PER PLANE	NEXT ASSEMBLY	SUPERSEDES	SUP. BY

THIS DRAWING IS THE PROPERTY OF THE PIPER AIRCRAFT CORP. AND ITS POSSESSION BY UNAUTHORIZED PERSONS SHALL NOT BE CONSTRUED AS PERMISSION TO REPRODUCE FOR SALE, IN WHOLE OR IN PART, ANY DEVICES SHOWN THEREON.

LET.	REVISION	DATE	BY

PIPER AIRCRAFT CORP.
LOCK HAVEN, PENNA.

LIGHT ASSEMBLY - COCKPIT

DRAFTSMAN	CHECKER	STANDARDS
RC 5.5.50	H.R.K. 5-11-50	

12898

12898 556

A556

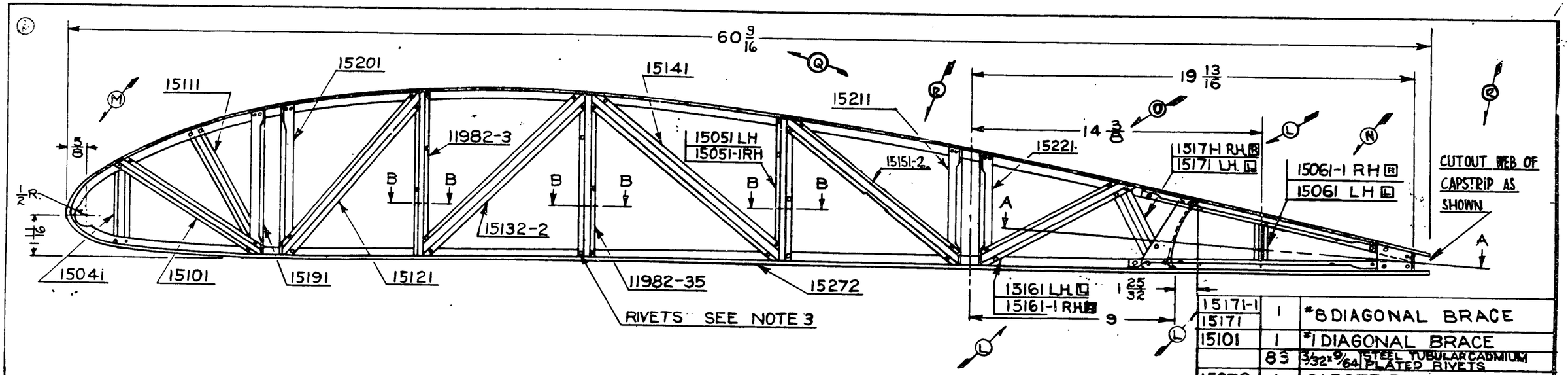

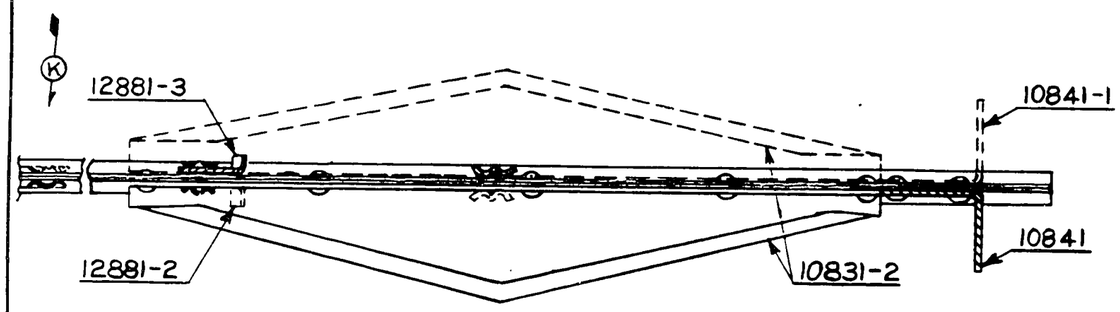

SECTION A-A
HALF SIZE



SECTION B-B
TWICE SIZE

NOTES:

1. FALSE SPAR FORMERS TO BE ALIGNED WITH SAME PARTS ON OTHER RIBS WHEN ASSEMBLED.
2. FOR INFORMATION NOT SHOWN SEE DWG. 13052.
3. ALL RIVETS 3/32 (.098 HOLE)

12902 L.H. SHOWN
12902-1 R.H. ASSEMBLED OPPOSITELY AS SHOWN DOTTED IN SECTION A-A.

PARTS MARKED [L] USED ON LEFT ASSEMBLY ONLY.
PARTS MARKED [R] USED ON RIGHT ASSEMBLY ONLY

LET.	REVISION	DATE	BR.	BY
S	FIG. 1 REM.	3-4-46		L.R.
R	15151-2 WAS 15151; NOTE ADDED	3-4-46		L.R.
Q	60 9/16 WAS 61 1/2 FIG 1 ADDED	2-8-44		C.E.V.
P	J3 MODEL REF. ADDED	8-18-43		I.D.B.
O	14 3/8 WAS 13	7-29-43		M.G.S.
N	15061-1 WAS 15081-1	7-29-43		M.G.S.
	15061 WAS 15081	7-29-43		M.G.S.
M	5/8, 1 1/16, 1 1/2 ADDED	7-29-43		M.G.S.
L	15161-1 & 15171-1 ADDED	7-29-43		M.G.S.
K	SECTION A-A REVISED	7-29-43		M.G.S.
J	REDRAWN & REVISED	5-10-43		C.K.

MODEL	PER SHIP	NEXT ASSEMBLY	SUPERSEDES	SUPERSEDED BY
J3	NEA	15556		
		13004		

PART No.	No. REQ.	SIZE DESCRIPTION MATERIAL
15171-1	1	#8 DIAGONAL BRACE
15171		
15101	1	#1 DIAGONAL BRACE
	85	3/32 x 9/64 STEEL TUBULAR CADMIUM PLATED RIVETS
15272	1	CAPSTRIP
15221	1	#4 ANGLE BRACE
15211	1	#3 ANGLE BRACE
15201	1	#2 ANGLE BRACE
15132-2	1	#4 DIAGONAL BRACE
15191	1	#1 ANGLE BRACE
15161-1	1	#7 DIAGONAL BRACE
15161		
15151-2	1	#6 DIAGONAL BRACE
15141	1	#5 DIAGONAL BRACE
15121	1	#3 DIAGONAL BRACE
15111	1	#2 DIAGONAL BRACE
15061-1	1	#5 VERTICAL BRACE
15061		
15051-1	1	#4 VERTICAL BRACE
15051	1	
15041	1	#2 VERTICAL BRACE
12881-3	1	FORMER
12881-2		
1198235	2	#3 VERTICAL BRACES
11982-3	2	#2 VERTICAL BRACES
10841-1	1	FITTING
10841		
10831-2	2	REINFORCEMENT

LIMITS, SHOP PRACTICES AND FINISH, UNLESS OTHERWISE NOTED, TO BE IN ACCORDANCE WITH PIPER SPECIFICATIONS 09 AND 010.

SCALE 3 IN. = 1 FT. & NOTED

RIB ASSY-. WING AILERON OUTBOARD

PIPER AIRCRAFT CORP.
LOCK HAVEN, PENNA.

DRAWN	CHECKED	APPROVED
C.K. 5-10-43	L.E.K. 5-13-43	

12902

557

A557

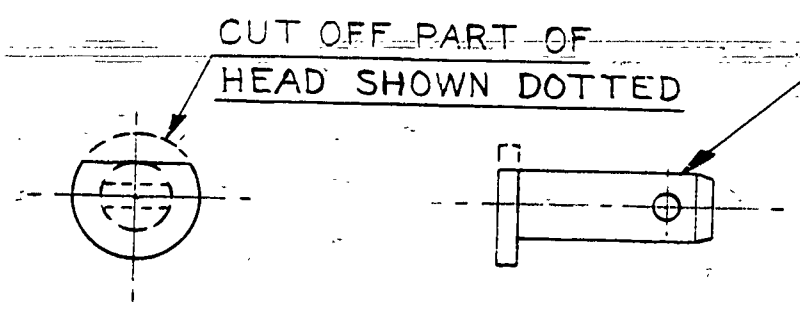

LET.	REVISION	DATE	BY

MODEL	PER PLANE	NEXT ASSEMBLY	SUPERSEDES	SUP. BY

THIS DRAWING IS THE PROPERTY OF THE PIPER AIRCRAFT CORP. AND ITS POSSESSION BY UNAUTHORIZED PERSONS SHALL NOT BE CONSTRUED AS PERMISSION TO REPRODUCE FOR SALE, IN WHOLE OR IN PART, ANY DEVICES SHOWN THEREON.

PIPER AIRCRAFT CORP.
LOCK HAVEN, PENNA.

PART No.	No. REQ.	NAME / MATERIAL
AN393-11	1	FLAT HD. PIN (REWORKED)

SCALE 2 x SIZE | TOTAL WT.--LBS.

FINISH—PIPER SPECIFICATION #10

MANUFACTURING PRACTICES—PIPER SPECIFICATION #9

PIN – SEAT STOP

DRAFTSMAN	CHECKER	STANDARDS
C. E. K. 6-14-50	H. R. K. 6-14-50	

12914

148

A148

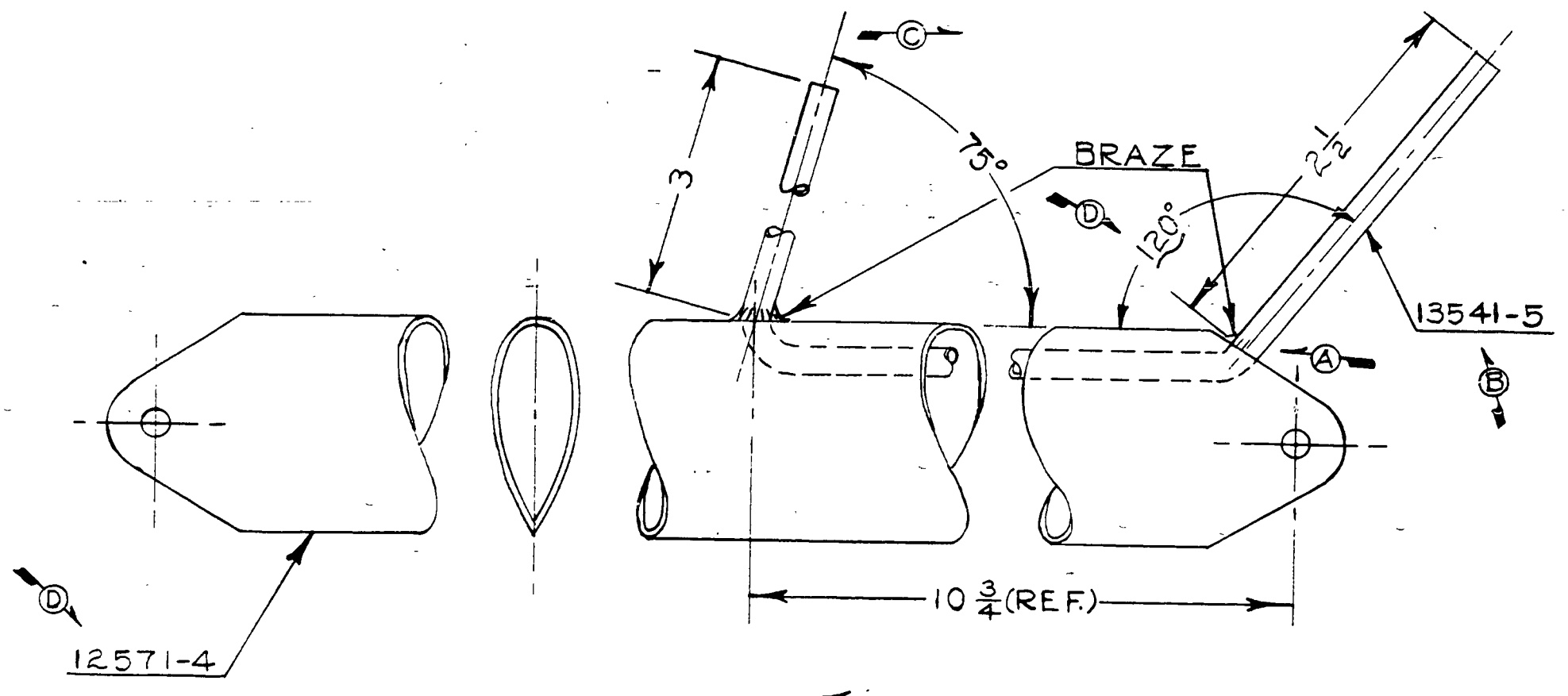

LET.	REVISION	DATE	BY
G	REDRAWN WITHOUT CHNG.	10-10-44	J.B.W.
F	10 3/4 REF. DIM. ADDED	8-12-44	J.B.M.
E	.250 HOLE REMOVED	6-14-43	C.E.K.
D	12571-4 WAS 12571-2, 120° ADDED	6-12-43	C.E.K.
C	.250 WAS 1/4 DIA.	4-28-43	C.E.K.
B	13541-5 WAS -2	6-12-42	M.G.S.
A	TACK BRAZE ADDED	3-16-42	R.R.B.

MODEL	PER PLANE	NEXT ASSEMBLY	SUPERSEDES	SUP. BY
TG-8	1	13395		
L-4B	1	13395		
L-4A	1	13395		
J-3	1	13395		

PENCILTEX A. & B. SMITH CO., PGH., PA.

PIPER AIRCRAFT CORP.
LOCK HAVEN, PENNA.

PART No.	No. REQ.	SIZE	DESCRIPTION
		MATERIAL	
13541-5	1		PITOT TUBE
12571-4	1		JURY STRUT
-2	1	3/16 D × 17 1/4	COPPER TUBING

SCALE FULL SIZE — TOTAL WT.—LBS.

FINISH—PIPER SPECIFICATION #10

MANUFACTURING PRACTICES—PIPER SPECIFICATION #9

STRUT ASSEMBLY
LEFT FRONT JURY

DRAFTSMAN	CHECKER	STANDARDS
W.N. EMERY 11-6-41	R.C.M. 11-10-41	

12931

149

A 149

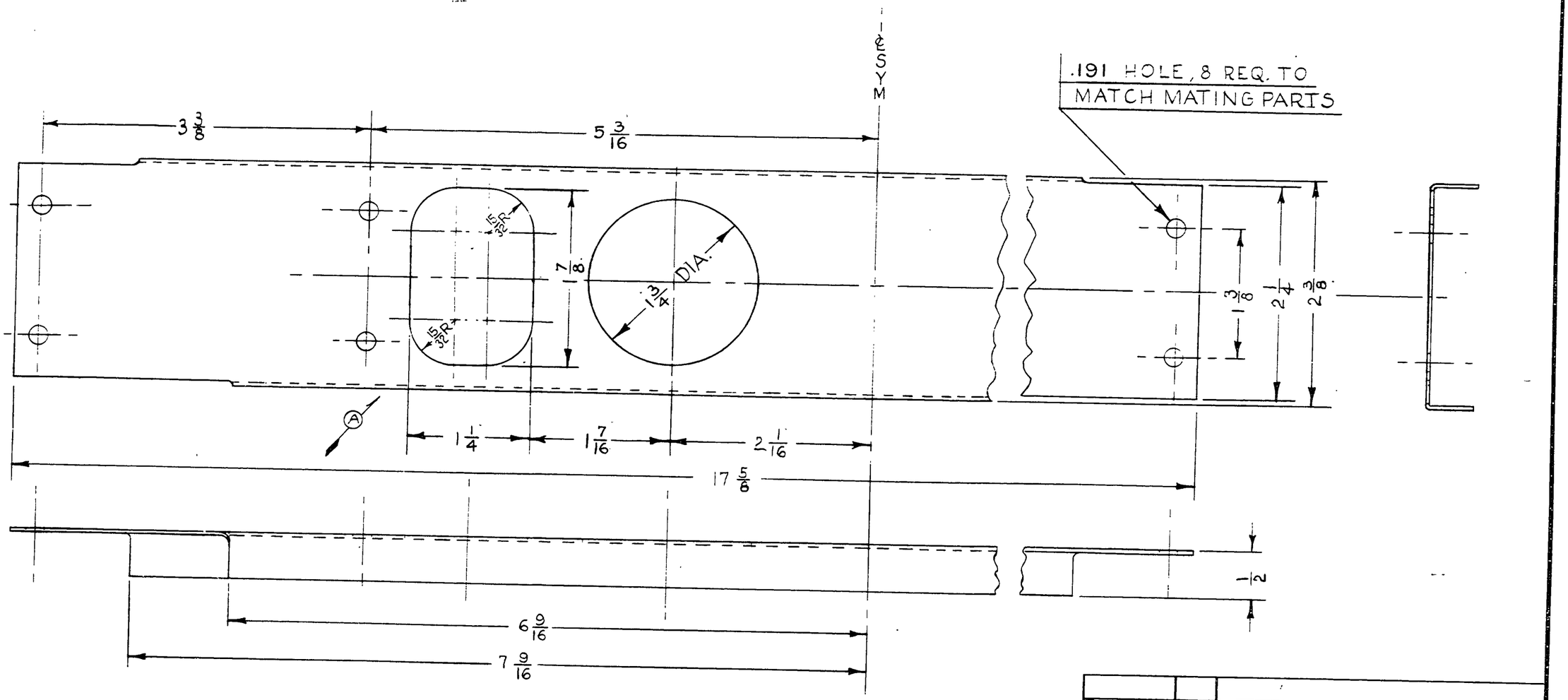
3 3/8
5 3/16
℄ SYM
.191 HOLE, 8 REQ. TO MATCH MATING PARTS
15/32 R.
15/32 R.
7/8
1 3/4 DIA.
1 3/8
2 1/4
2 3/8
A
1 1/4
1 7/16
2 1/16
17 5/8
1/2
6 9/16
7 9/16

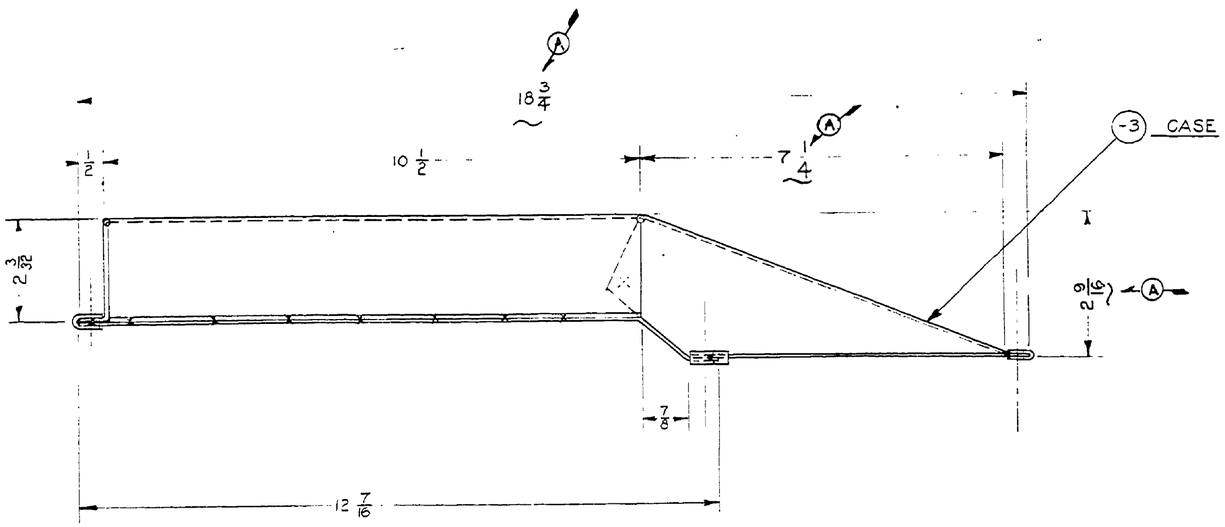

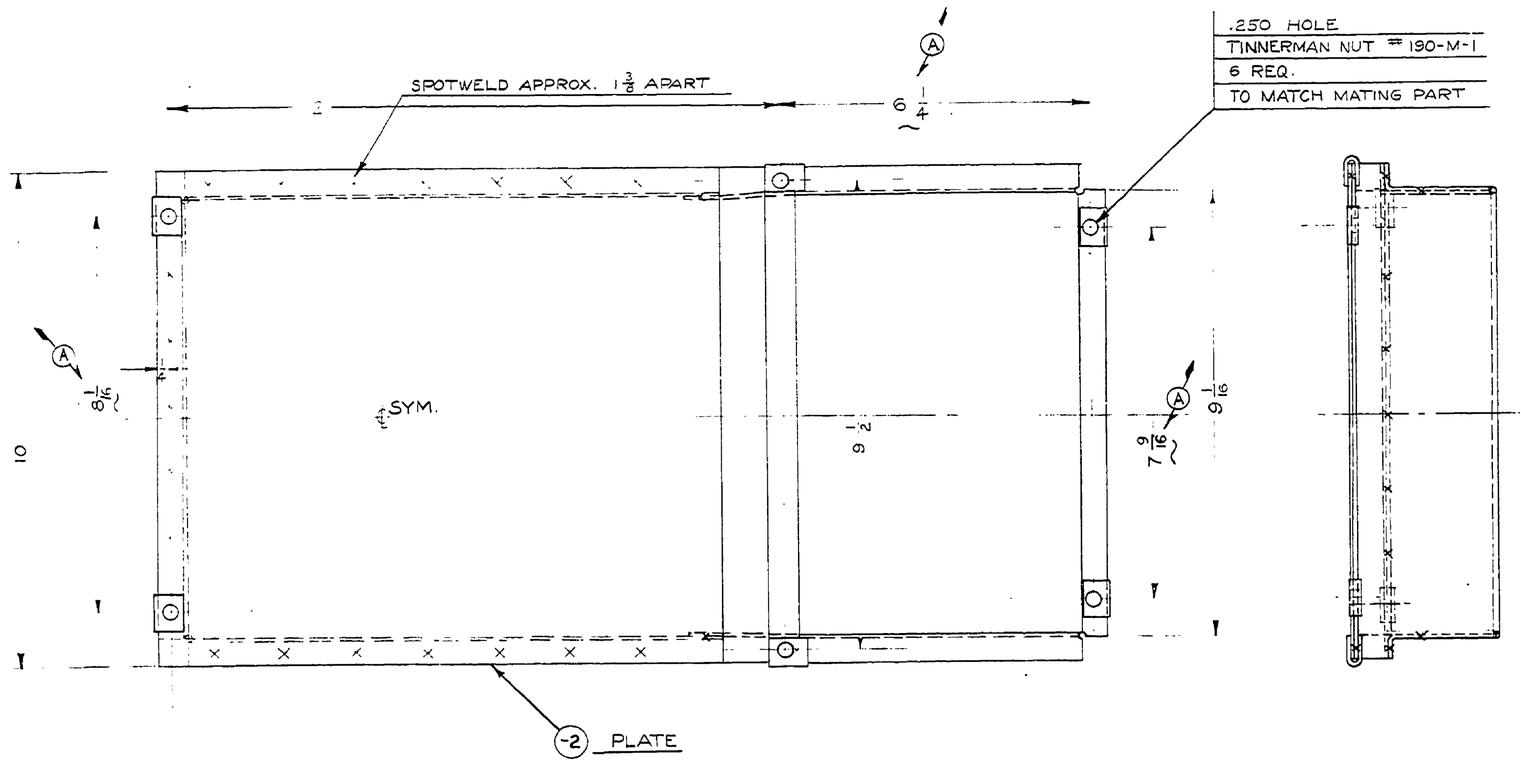

	6	# 190-M-1	TINNERMAN NUT
-3	1	.032 × 15 1/4 × 21 1/2	3S - 1/2 [illegible]
-2	1	.032 × 10 × 13 5/8	3S - 1/2 [illegible]
PART NO.	No. REQ.	SIZE	DESCRIPTION
		MATERIAL	

SCALE 6 IN. = 1 FT. TOTAL WT.—LBS.

FINISH—PIPER SPECIFICATION #10

MANUFACTURING PRACTICES—PIPER SPECIFICATION #9

THIS DRAWING IS THE PROPERTY OF THE PIPER AIRCRAFT CORP. AND ITS POSSESSION BY UNAUTHORIZED PERSONS SHALL NOT BE CONSTRUED AS PERMISSION TO REPRODUCE FOR SALE, IN WHOLE OR IN PART. ANY DEVICES SHOWN THEREON

MODEL	PER PLANE	NEXT ASSEMBLY	SUPERSEDES	SUP. BY

LET.	REVISION	DATE	BY
A	2 3/8 WAS 2 3/4, 18 3/4 WAS 18 1/2, 6 1/4 WAS 6, 7 9/16 WAS 7 1/2, 8 1/16 WAS 8, 7 1/8 WAS 7	9-15-50	K.D.

PIPER AIRCRAFT CORP.
LOCK HAVEN, PENNA.

CASE ASSEMBLY - DATA

F.C.S.	H.R.K.		
8-18-50	8-28-50		
DRAFTSMAN	CHECKER	STANDARDS	12958

773

A773

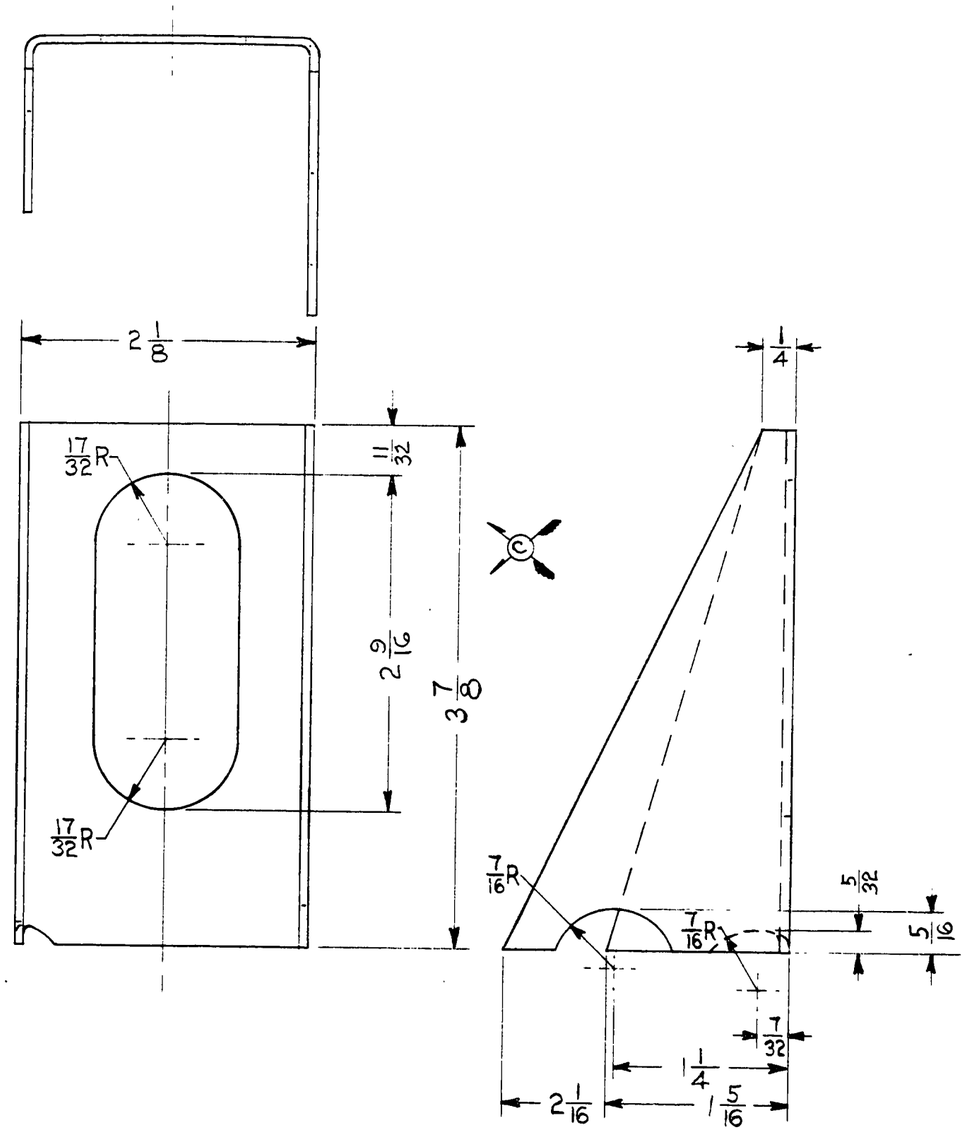
2 1/8
17/32R
11/32
2 9/16
3 7/8
17/32R
1/4
7/16R
5/32
5/16
7/16R
7/32
1 1/4
2 1/16
1 5/16

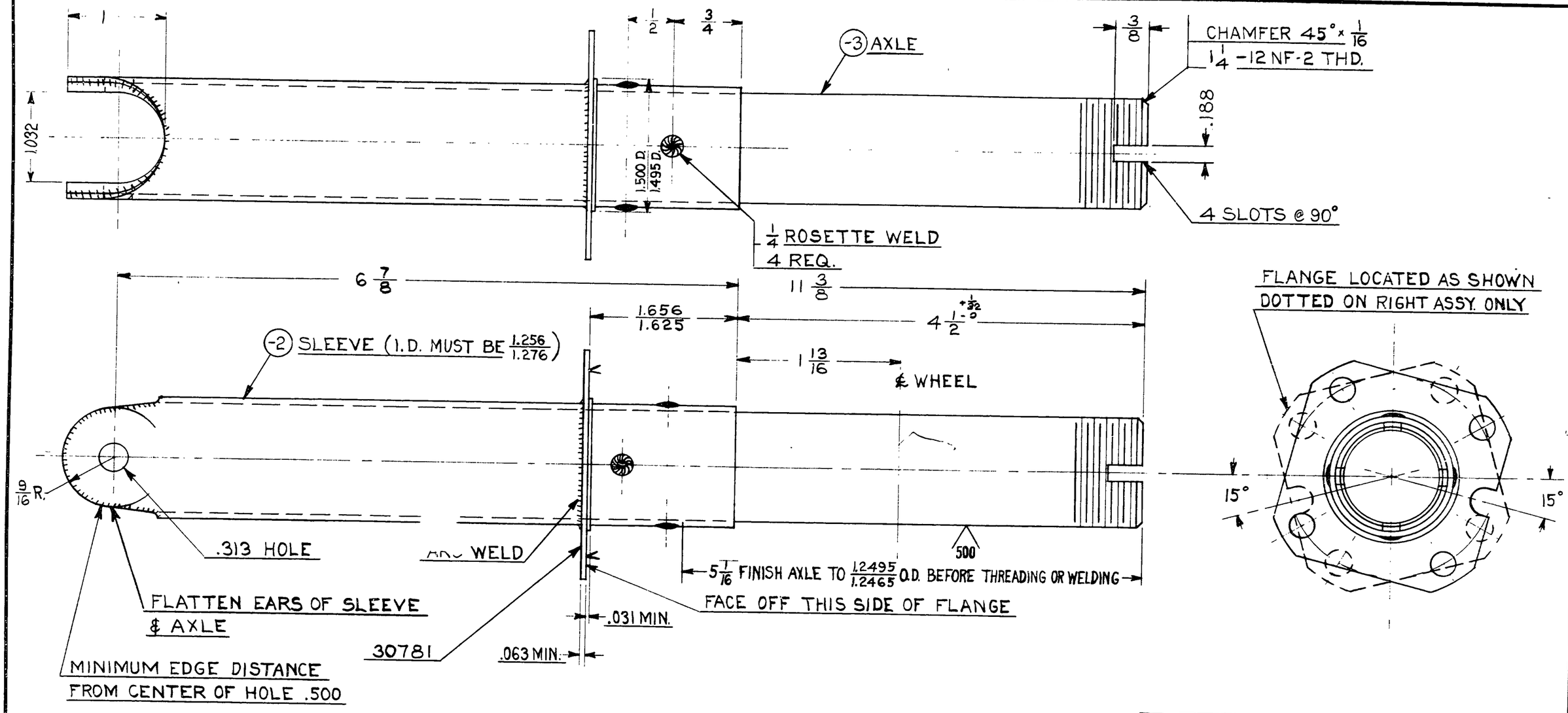

12965 L.H. SHOWN
12965-1 R.H. OPPOSITE

LET.	REVISION	DATE	BY

MODEL	PER PLANE	NEXT ASSEMBLY	SUPERSEDES	SUP. BY

THIS DRAWING IS THE PROPERTY OF THE PIPER AIRCRAFT CORP. AND ITS POSSESSION BY UNAUTHORIZED PERSONS SHALL NOT BE CONSTRUED AS PERMISSION TO REPRODUCE FOR SALE, IN WHOLE OR IN PART, ANY DEVICES SHOWN THEREON.

PIPER AIRCRAFT CORP.
LOCK HAVEN, PENNA.

PART No.	No. REQ.	SIZE	DESCRIPTION / MATERIAL
30781	1		FLANGE
-3	1	1 1/4 x .095 x 12 1/16	*4130 S.S.T.
-2	1	1 3/8 x .058 x 7 1/2	*4130 S.S.T.

SCALE FULL SIZE — TOTAL WT.—LBS.
FINISH—PIPER SPECIFICATION #10
MANUFACTURING PRACTICES—PIPER SPECIFICATION #9

AXLE ASSEMBLY — LANDING GEAR

DRAFTSMAN	CHECKER	STANDARDS	
H.R.K. 8-15-50	C.E.K. 9-13-50		12965

12965 560

A 560

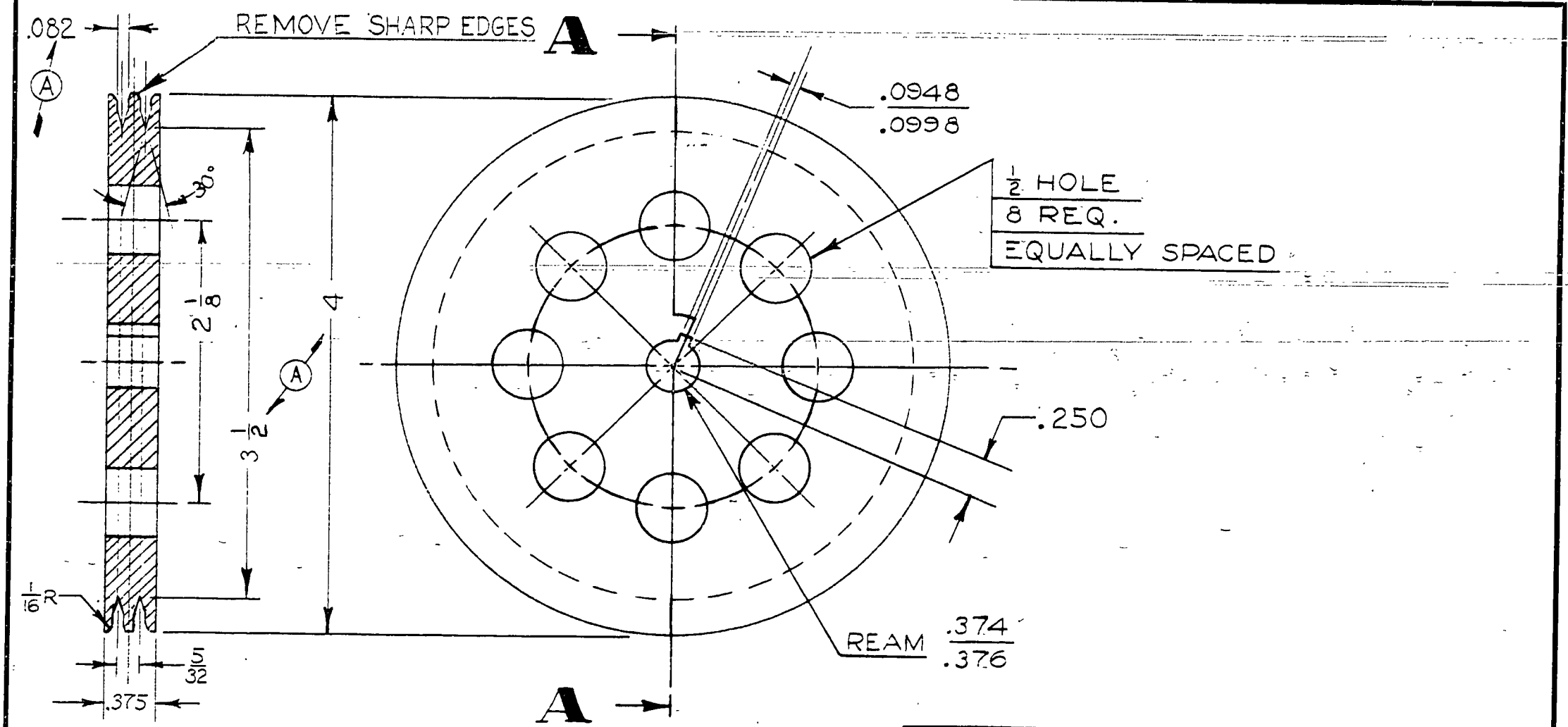
.082
A
REMOVE SHARP EDGES
A
.0948
.0998
½ HOLE
8 REQ.
EQUALLY SPACED
30°
2 1/8
4
3 1/2
A
.250
1/16 R
REAM .374
.376
5/32
.375
A
SECTION A-A

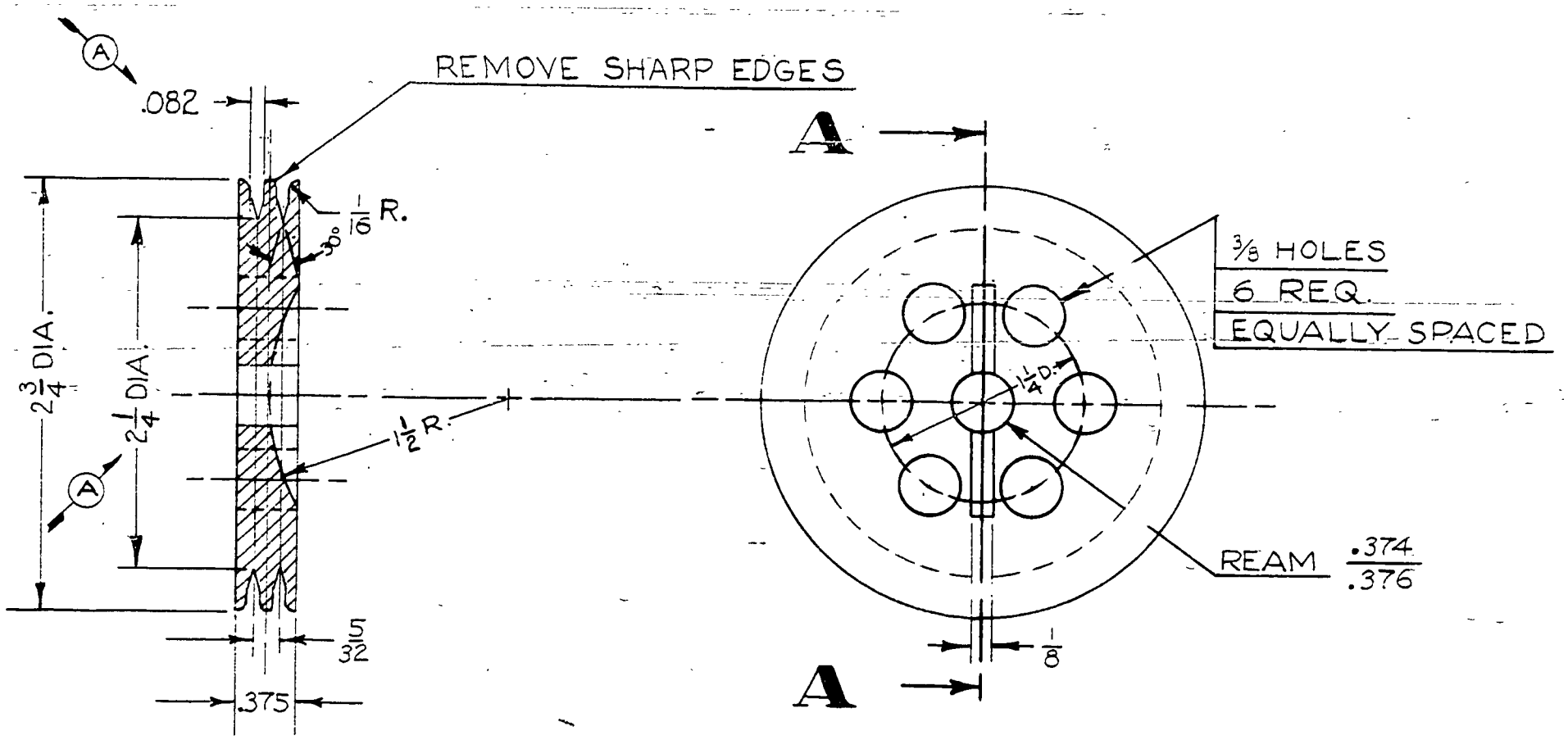
A
.082
REMOVE SHARP EDGES
A
1/16 R.
30°
2 3/4 DIA.
2 1/4 DIA.
1 1/2 R.
A
5/32
.375
3/8 HOLES
6 REQ.
EQUALLY SPACED
1 1/4 D.
REAM .374 / .376
1/8
A

SECTION **A-A**

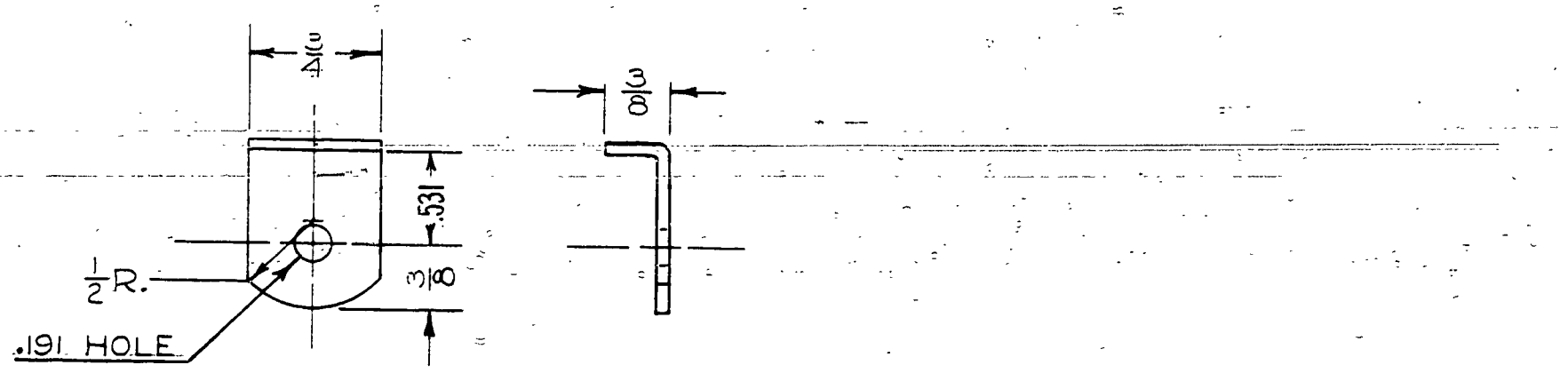

LET.	REVISION	DATE	BY

MODEL	PER PLANE	NEXT ASSEMBLY	SUPERSEDES	SUP. BY

THIS DRAWING IS THE PROPERTY OF THE PIPER AIRCRAFT CORP. AND ITS POSSESSION BY UNAUTHORIZED PERSONS SHALL NOT BE CONSTRUED AS PERMISSION TO REPRODUCE FOR SALE, IN WHOLE OR IN PART, ANY DEVICES SHOWN THEREON.

PIPER AIRCRAFT CORP.
LOCK HAVEN, PENNA.

PART No.	No. REQ.	SIZE	DESCRIPTION
		.062 × 3/4 × 1 5/16	#1025 STEEL
		MATERIAL	

SCALE FULL SIZE — TOTAL WT.–LBS.

FINISH–PIPER SPECIFICATION #10

MANUFACTURING PRACTICES–PIPER SPECIFICATION #9

BRACKET - PULLEY

DRAFTSMAN	CHECKER	STANDARDS
F. C. S. 9-6-50	H. R. K. 9-7-50	

12993

152

A 152

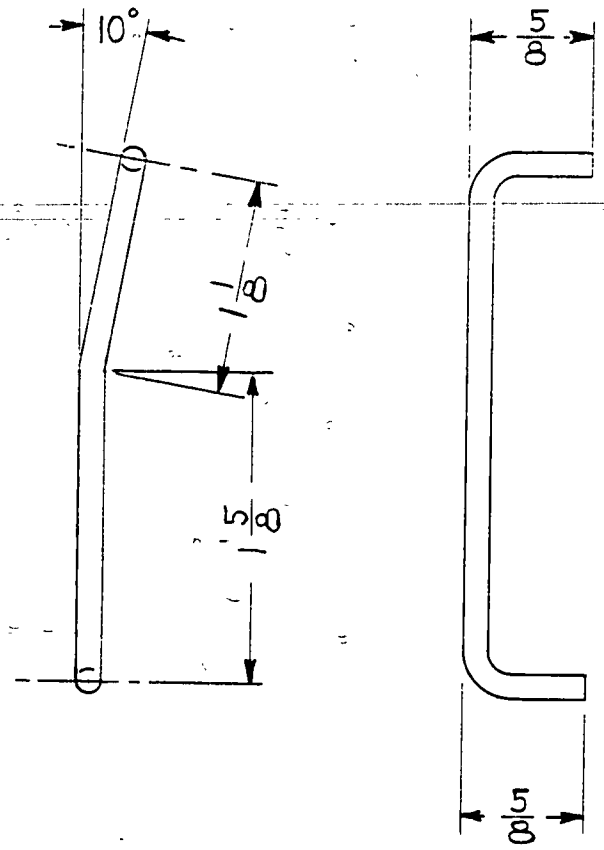

LET.	REVISION	DATE	BY	MODEL	PER PLANE	NEXT ASSEMBLY	SUPERSEDES	SUP. BY	

THIS DRAWING IS THE PROPERTY OF THE PIPER AIRCRAFT CORP. AND ITS POSSESSION BY UNAUTHORIZED PERSONS SHALL NOT BE CONSTRUED AS PERMISSION TO REPRODUCE FOR SALE, IN WHOLE OR IN PART. ANY DEVICES SHOWN THEREON.

PIPER AIRCRAFT CORP.
LOCK HAVEN, PENNA.

PART No.	No. REQ.	SIZE	DESCRIPTION / MATERIAL
		1/8 DIA. × 4L.	#1010 C.F. STL. WIRE

SCALE FULL SIZE — TOTAL WT.—LBS.

FINISH—PIPER SPECIFICATION #10

MANUFACTURING PRACTICES—PIPER SPECIFICATION #9

GUARD—CABLE

DRAFTSMAN	CHECKER	STANDARDS
H. R. K. 9-7-50	C. E. K. 9-13-50	

12995

153

A153

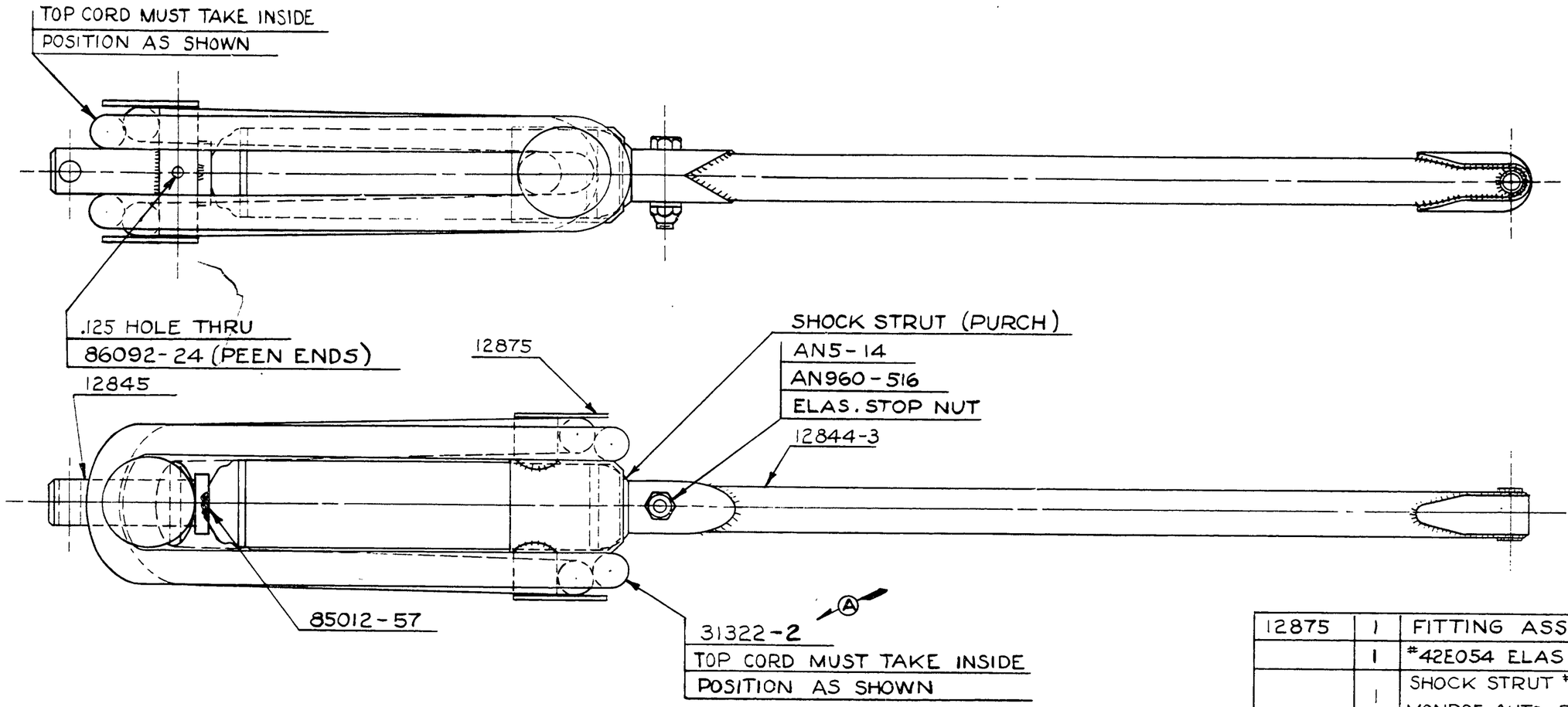

12875	1	FITTING ASSY.
	1	#42E054 ELAS. STOP NUT
	1	SHOCK STRUT #18233 PURCH MONROE AUTO EQUIPMENT CO.
AN960-516	1	WASHER
AN5-14	1	BOLT
86092-24	1	PIN
85012-57	1	WASHER
31322-2	2	SHOCK CORD RING
12845	1	FITTING ASSY.
12844-3	1	TUBE ASSY.

PART No.	No. REQ.	NAME / MATERIAL

SCALE 6 IN. = 1 FT. | TOTAL WT.-LBS.

FINISH—PIPER SPECIFICATION #10

MANUFACTURING PRACTICES—PIPER SPECIFICATION #9

STRUT ASSEMBLY - SHOCK

MODEL	PER PLANE	NEXT ASSEMBLY	SUPERSEDES	SUP. BY

THIS DRAWING IS THE PROPERTY OF THE PIPER AIRCRAFT CORP. AND ITS POSSESSION BY UNAUTHORIZED PERSONS SHALL NOT BE CONSTRUED AS PERMISSION TO REPRODUCE FOR SALE, IN WHOLE OR IN PART, ANY DEVICES SHOWN THEREON.

LET.	REVISION	DATE	BY
A	31322-2 WAS 31322-4	5-22-51	I.E.M.

PIPER AIRCRAFT CORP.
LOCK HAVEN, PENNA.

F. C. S.	H. R. K.		12998
9-8-50	9-8-50		
DRAFTSMAN	CHECKER	STANDARDS	

561

- A 561

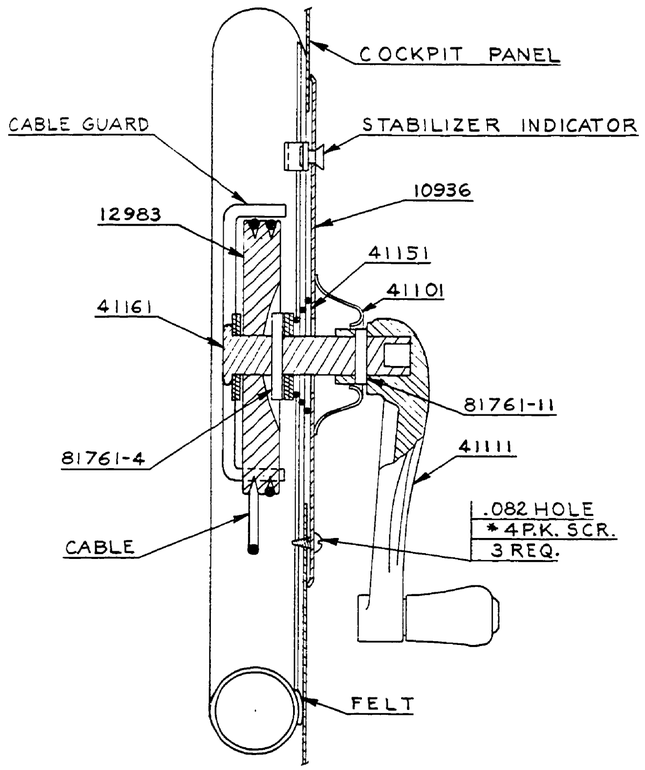

SECTION A-A
FULL SIZE

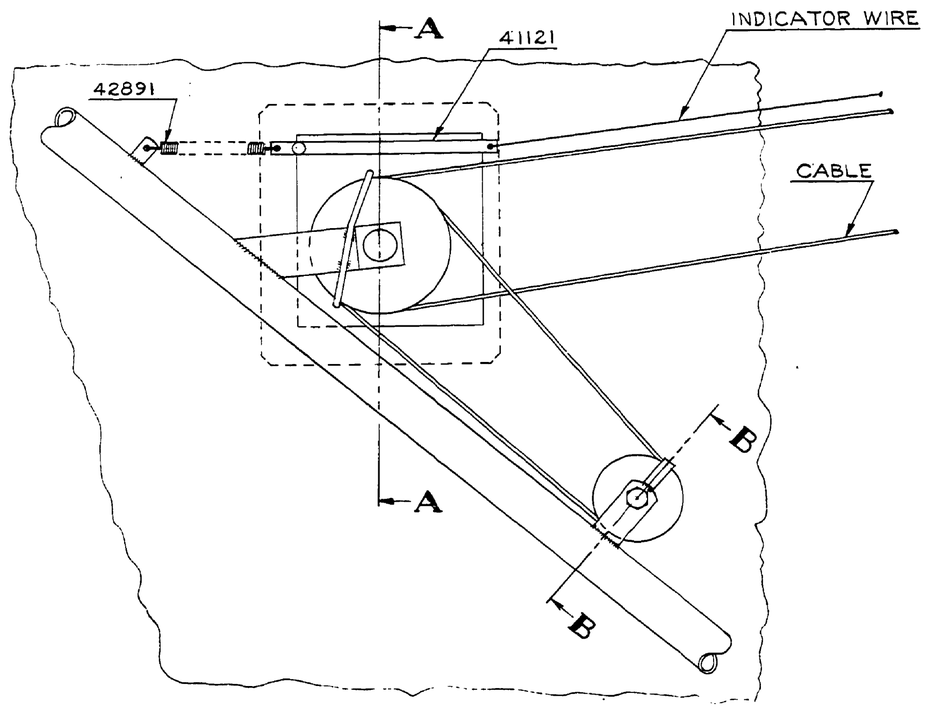

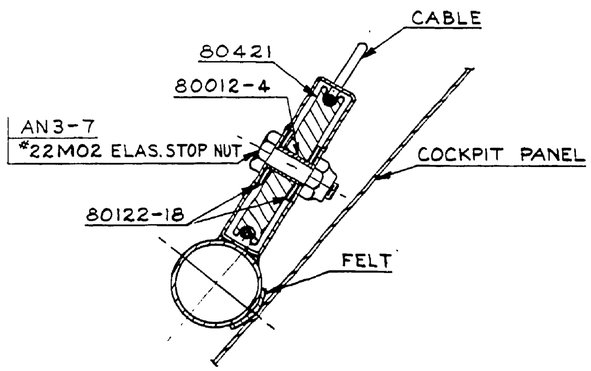

SECTION B-B
FULL SIZE

	1	*22M02 ELAS. STOP NUT
*4	3	1/4 LONG | TYPE A STOVE HD. P.K. SCR
AN3-7	1	BOLT
81761-11	1	PIN
81761-4	1	
80421	1	PULLEY
80122-18	2	WASHER
80012-4	1	BUSHING
42891	1	SPRING
41161	1	PIN
41151	1	SPRING
41121	1	INDICATOR ASSY.
41111	1	CRANK ASSY.
41101	1	PLATE
12983	1	PULLEY
10936	1	PLATE
PART NO.	No. REQ.	SIZE | DESCRIPTION MATERIAL

THIS DRAWING IS THE PROPERTY OF THE PIPER AIRCRAFT CORP. AND ITS POSSESSION BY UNAUTHORIZED PERSONS SHALL NOT BE CONSTRUED AS PERMISSION TO REPRODUCE FOR SALE, IN WHOLE OR IN PART, ANY DEVICES SHOWN THEREON

LET.	REVISION	DATE	BY

MODEL	PER PLANE	NEXT ASSEMBLY	SUPERSEDES	SUP. BY

SCALE 6 IN. = 1 FT. & NOTED | TOTAL WT.—LBS.
FINISH—PIPER SPECIFICATION #10
MANUFACTURING PRACTICES—PIPER SPECIFICATION #9

CRANK INSTALLATION— STABILIZER ADJUSTMENT

PIPER AIRCRAFT CORP.
LOCK HAVEN, PENNA.

DRAFTSMAN	CHECKER	STANDARDS
C. F. K. 9-8-50	H. R. K. 9-11-50	

12999

774

A774

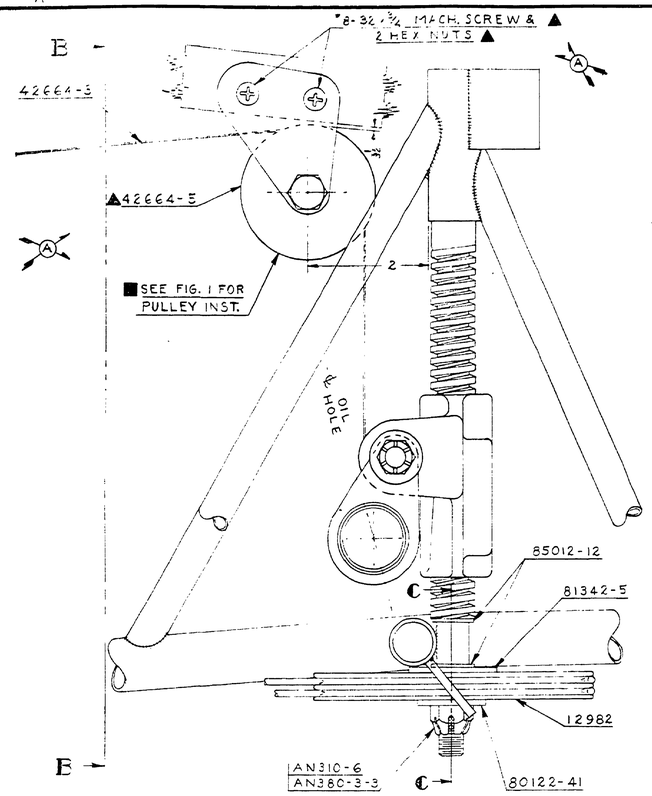

SECTION A—A
FULL SIZE

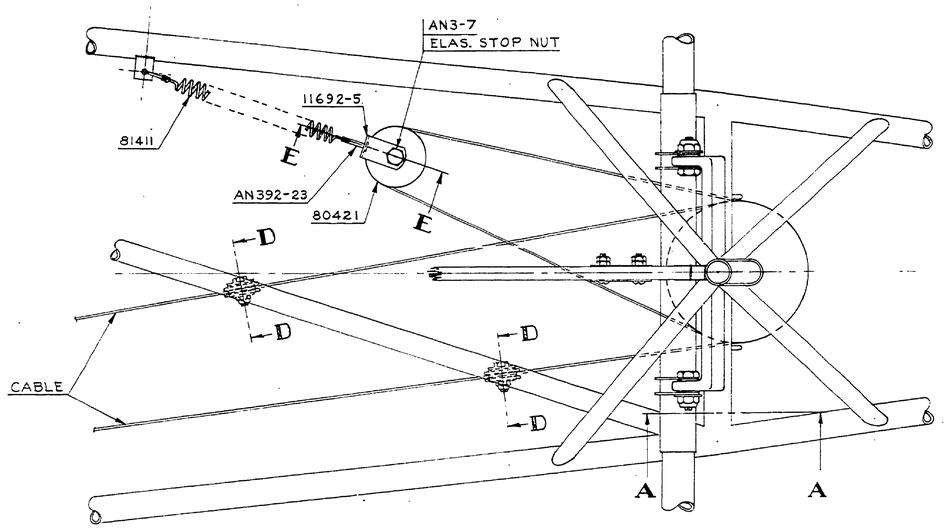

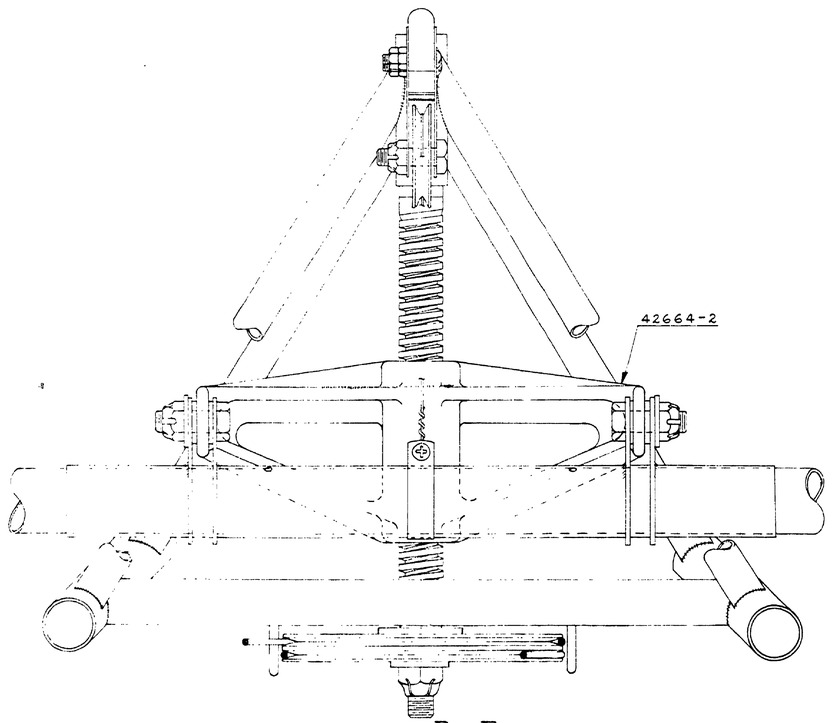

SECTION B—B
FULL SIZE

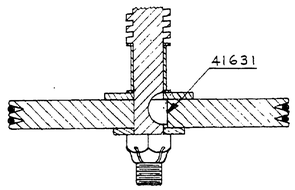

SECTION C—C
FULL SIZE

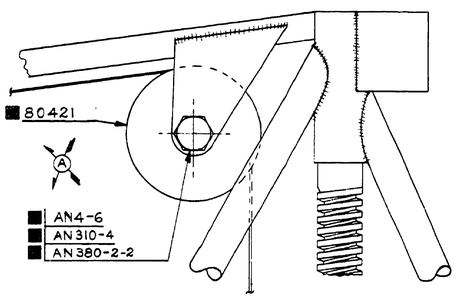

■ FIG. 1
FULL SIZE

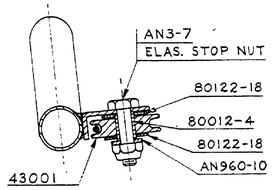

SECTION D—D
FULL SIZE

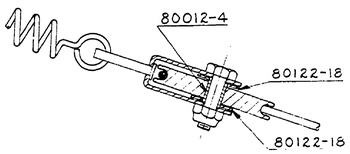

SECTION E—E
FULL SIZE

▲ NOT USED ON PA-18 COMPLETE AIRPLANE #13253.
■ USED ON PA-18 COMPLETE AIRPLANE #13253 ONLY.

	PART No.	No. REQ.	SIZE / DESCRIPTION / MATERIAL
■	AN380-2-2	1	COTTER PIN
■	AN310-4	1	NUT
■	AN4-6	1	BOLT
■	80421	1	PULLEY
		3	#22 M02 ELAS. STOP NUT
▲	#8-32	4	HEX NUT
▲	#8-32	2	3/4 L. RD. HD. MACH. SCR.
	AN960-10	2	WASHER
	AN392-23	1	FLAT HD. PIN
	AN380-3-3	1	COTTER PIN
	AN310-6	1	NUT
	AN3-7	3	BOLT
	85012-12	2	WASHER
	81411	1	SPRING
	81342-5	1	WASHER
	80421	1	PULLEY
	80122-41	1	WASHER
	80122-18	6	
	80012-4	3	BUSHING
	43001	2	PULLEY
▲	42664-5	1	PULLEY & BRKT. ASSY.
	42664-3	1	INDICATOR WIRE
	42664-2	1	SCREW & YOKE ASSY.
	41631	1	KEY
	12982	1	PULLEY
	11692-5	1	BRACKET

SCALE 6 IN = 1 FT. & NOTED — TOTAL WT.—LBS.
FINISH—PIPER SPECIFICATION #10
MANUFACTURING PRACTICES—PIPER SPECIFICATION #9

LET.	REVISION	DATE	BY
A	80421 & ATTACH. & CODE ADDED	3-21-51	C.K.

MODEL | PER PLANE | NEXT ASSEMBLY | SUPERSEDES | SUP. BY

THIS DRAWING IS THE PROPERTY OF THE PIPER AIRCRAFT CORP. AND ITS POSSESSION BY UNAUTHORIZED PERSONS SHALL NOT BE CONSTRUED AS PERMISSION TO REPRODUCE FOR SALE, IN WHOLE OR IN PART, ANY DEVICES SHOWN THEREON.

PIPER AIRCRAFT CORP.
LOCK HAVEN, PENNA.

YOKE INSTALLATION—
STABILIZER ADJUSTMENT

DRAFTSMAN	CHECKER	STANDARDS
C. E. K. 9-12-50	H. R. K. 9-13-50	

13000

P. S. P. Co. No. 134

866

A866

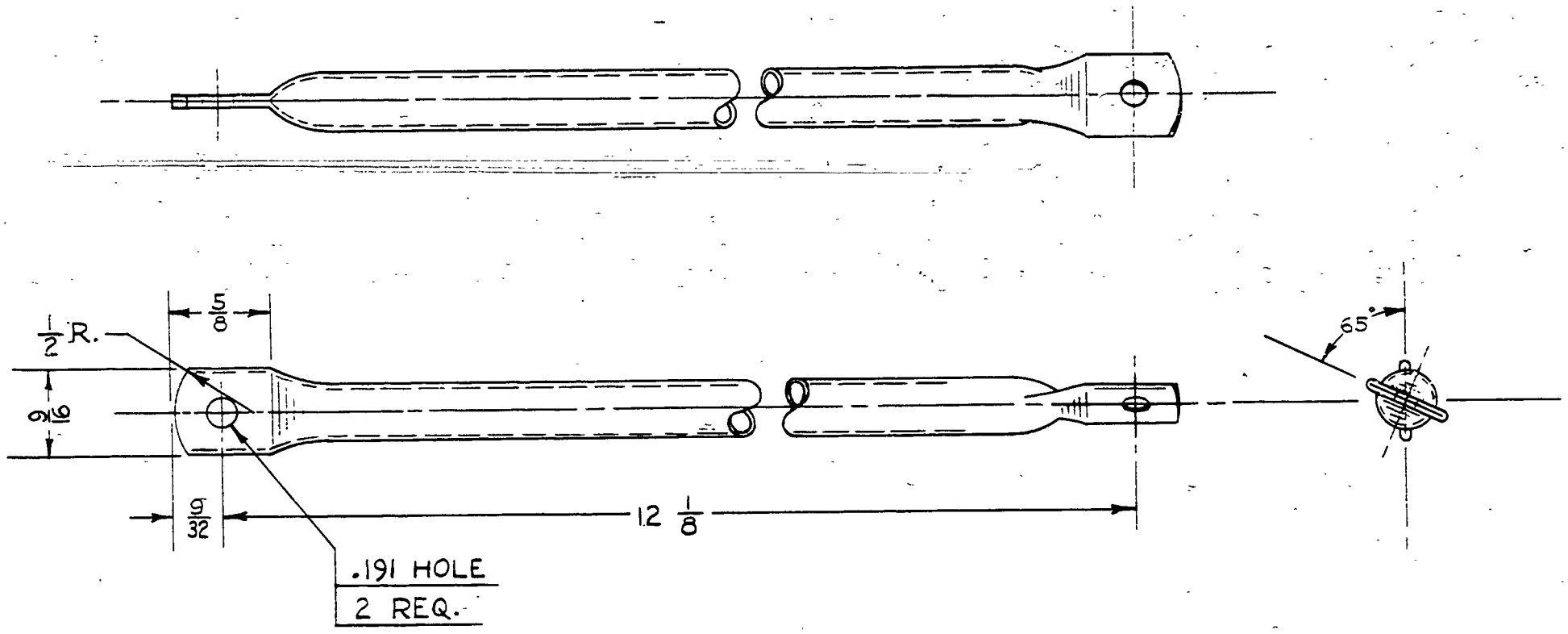

LET.	REVISION	DATE	BY	MODEL	PER PLANE	NEXT ASSEMBLY	SUPERSEDES	SUP. BY	

THIS DRAWING IS THE PROPERTY OF THE PIPER AIRCRAFT CORP. AND ITS POSSESSION BY UNAUTHORIZED PERSONS SHALL NOT BE CONSTRUED AS PERMISSION TO REPRODUCE FOR SALE, IN WHOLE OR IN PART, ANY DEVICES SHOWN THEREON.

PIPER AIRCRAFT CORP.
LOCK HAVEN, PENNA.

PART No.	No. REQ.	SIZE	DESCRIPTION
		3/8 × .028 × 12 11/16	#1025 STEEL TUBE
		MATERIAL	

SCALE FULL SIZE — TOTAL WT.–LBS.

FINISH–PIPER SPECIFICATION #10

MANUFACTURING PRACTICES–PIPER SPECIFICATION #2

TUBE - TAILPIPE SUPPORT

F. C. S.	H. R. K.		
9-14-50	9-14-50		13003
DRAFTSMAN	CHECKER	STANDARDS	

154

A154

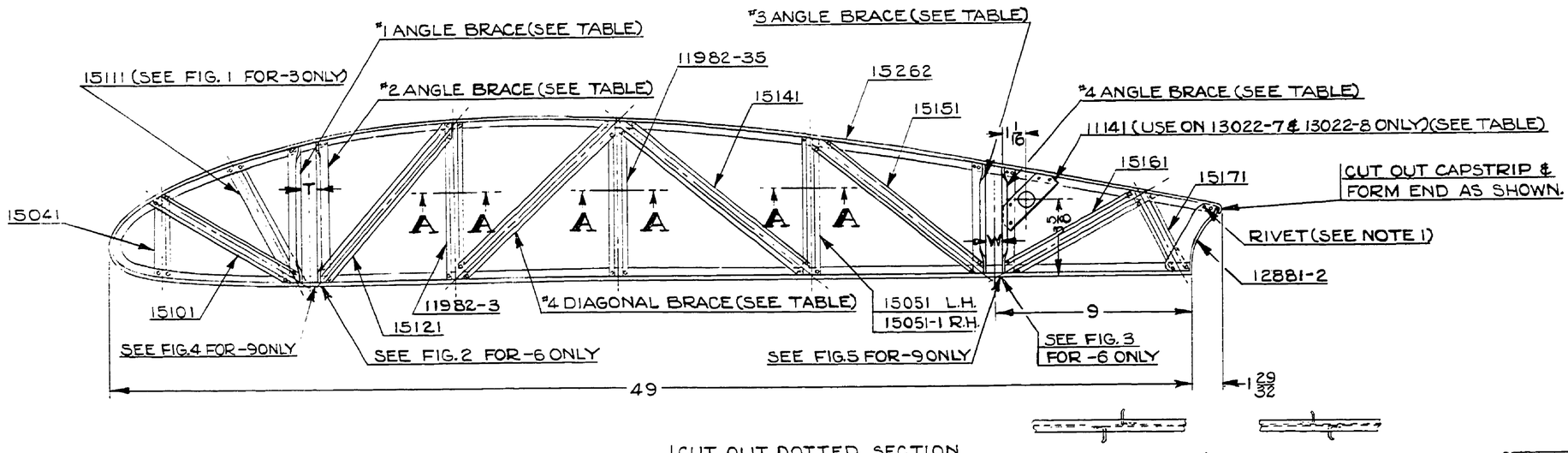

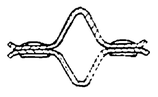

SECTION A-A
TWICE SIZE

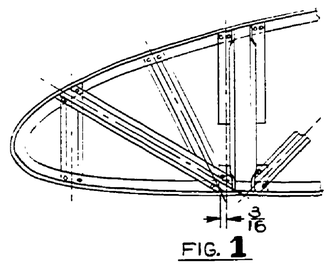

FIG. 1
DIAGONAL BRACE INST.

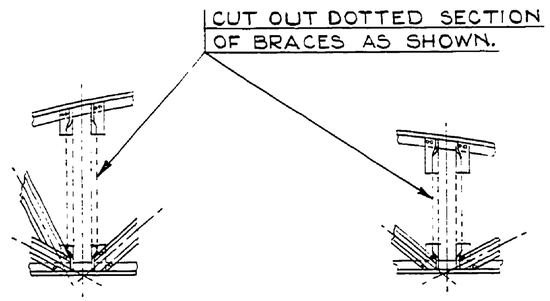

FIG. 2
ANGLE BRACE DETAIL
-6 ONLY

FIG. 3
ANGLE BRACE DETAIL
-6 ONLY

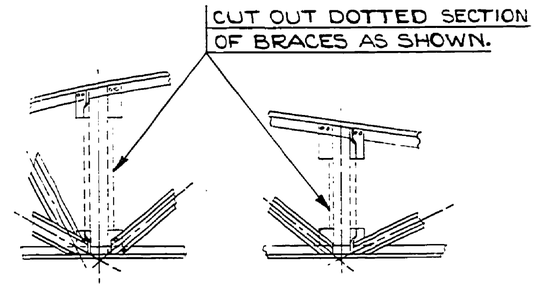

FIG. 4
ANGLE BRACE DETAIL
-9 ONLY

FIG. 5
ANGLE BRACE DETAIL
-9 ONLY

ASS'Y. Nº	T	W	#1 ANGLE BRACE	#2 ANGLE BRACE	#3 ANGLE BRACE	#4 ANGLE BRACE	#4 DIAGONAL BRACE
13022-2	27 +1/32 -0 / 32 -0	29 +1/32 -0 / 32 -0	15191	15201	15211	15221	15132-2
13022-3	31 +1/32 -0 / 32 -0	1 +1/32 -0 / 32 -0	15311	15321	15331	15341	15132-2
13022-4	27 +1/32 -0 / 32 -0	29 +1/32 -0 / 32 -0	15191	15201	15211	15221	15132-3
13022-5	27 +1/32 -0 / 32 -0	29 +1/32 -0 / 32 -0	15191	15321-2	15331-2	15221	15132-2
13022-6	27 +1/32 -0 / 32 -0	29 +1/32 -0 / 32 -0	15311-3	16131	16141	16151	15132-2
13022-7	SAME AS 13022-5 EXCEPT 11141 INSTALLED AS NOTED.						
13022-8	SAME AS 13022-2 EXCEPT 11141 INSTALLED AS NOTED						
13022-9	27 +1/32 -0 / 32 -0	29 +1/32 -0 / 32 -0	15311-3	16131-1	16141-1	16151	15132-2

NOTES:

1. ALL RIVETS 3/32 (.098 HOLE).
2. FALSE SPAR FORMERS TO BE ALIGNED WITH SAME PARTS ON OTHER RIBS WHEN ASSEMBLED.
3. FOR INFORMATION NOT SHOWN SEE DWG. 13052.

	64	3/32 x 9/64 L	ST'L. TUBULAR CADMIUM PLATED RIVETS
15262	1	CAPSTRIP	
16151	1	#4 ANGLE BRACE	-6 & -9 ONLY
15341			-3 ONLY
15221			-2-4-5-7-8 ONLY
16141-1	1	#3 ANGLE BRACE	-9 ONLY
16141			-6 ONLY
15331-2			-5 & -7 ONLY
15331			-3 ONLY
15211			-2-4-8 ONLY
16131-1	1	#2 ANGLE BRACE	-9 ONLY
16131			-6 ONLY
15321-2			-5 & -7 ONLY
15321			-3 ONLY
15201			-2-4-8 ONLY
15311-3	1	#1 ANGLE BRACE	-6 & -9 ONLY
15311			-3 ONLY
15191			-2-4-5-7-8 ONLY
15171	1	#8 DIAGONAL BRACE	
15161	1	#7 DIAGONAL BRACE	
15151	1	#6 DIAGONAL BRACE	
15141	1	#5 DIAGONAL BRACE	
15132-3	1	#4 DIAGONAL BRACE	-4 ONLY
15132-2			-2-3-5-6-7-8-9 ONLY
15121	1	#3 DIAGONAL BRACE	
15111	1	#2 DIAGONAL BRACE	
15101	1	#1 DIAGONAL BRACE	
15051-1	1	#4 VERTICAL BRACE	
15051	1		
15041	1	#1 VERTICAL BRACE	
12881-2	1	FALSE SPAR FORMER	
11982-35	2	#3 VERTICAL BRACE	
11982-3	2	#2 VERTICAL BRACE	
11141	1	PLATE (-7 & -8 ONLY)	
PART NO.	NO. REQ.	SIZE	DESCRIPTION
		MATERIAL	

SCALE 3 IN = 1 FT. & NOTED | TOTAL WT.—LBS.

FINISH—PIPER SPECIFICATION #10

MANUFACTURING PRACTICES—PIPER SPECIFICATION #9

THIS DRAWING IS THE PROPERTY OF THE PIPER AIRCRAFT CORP. AND ITS POSSESSION BY UNAUTHORIZED PERSONS SHALL NOT BE CONSTRUED AS PERMISSION TO REPRODUCE FOR SALE, IN WHOLE OR IN PART, ANY DEVICES SHOWN THEREON

LET.	REVISION	DATE	BY
R	REDRAWN & REVISED	6-5-51	I.E.M.

MODEL	PER PLANE	NEXT ASSEMBLY	SUPERSEDES	SUP. BY

PIPER AIRCRAFT CORP.
LOCK HAVEN, PENNA.

RIB ASSEMBLY-
WING THREE QUARTER

DRAFTSMAN	CHECKER	STANDARDS
I. E. M. 6-5-51	H. R. K. 6-6-51	

13022

A775

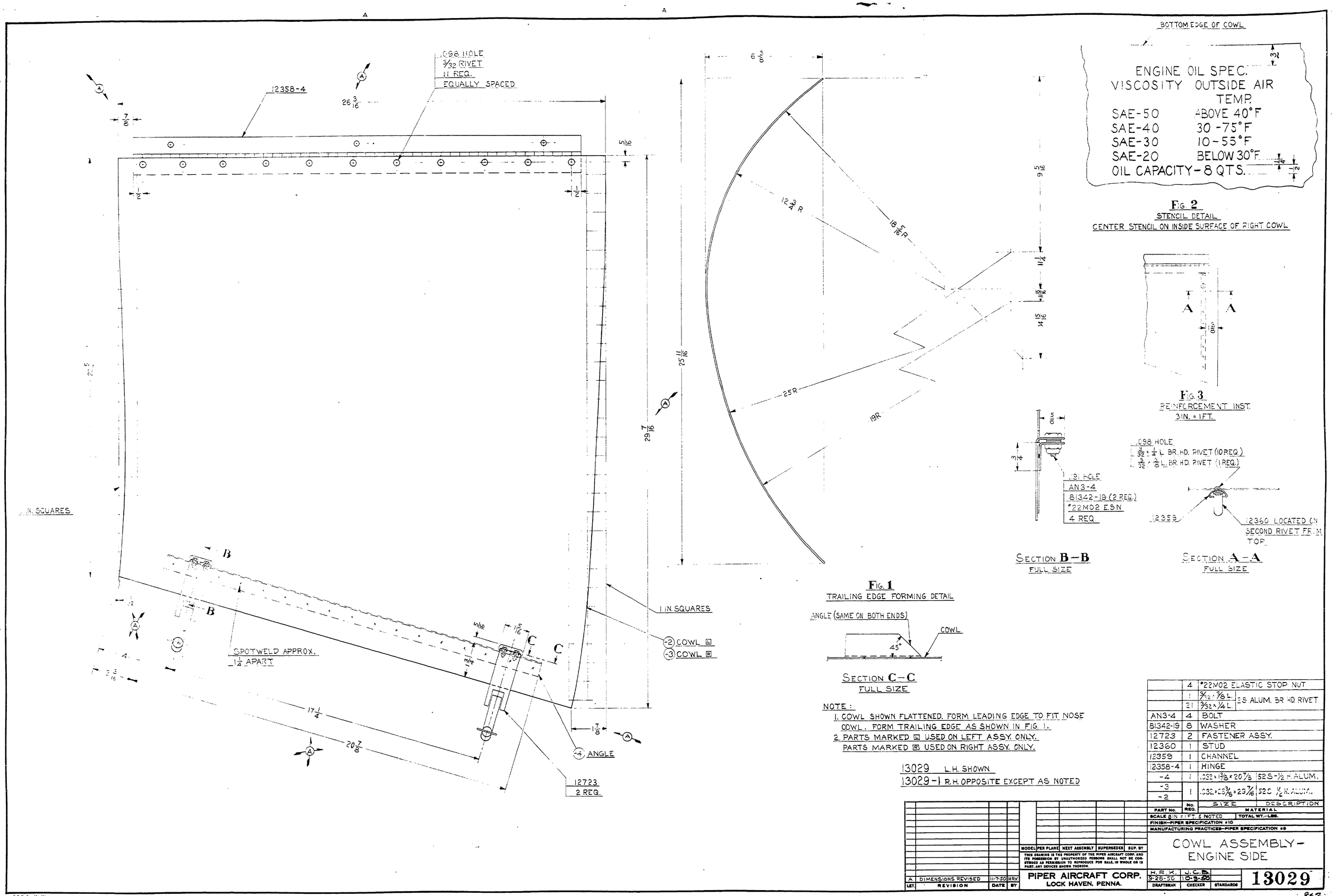

BOTTOM EDGE OF COWL
ENGINE OIL SPEC.
VISCOSITY OUTSIDE AIR TEMP.
SAE-50 ABOVE 40°F
SAE-40 30-75°F
SAE-30 10-55°F
SAE-20 BELOW 30°F
OIL CAPACITY-8 QTS.
FIG. 2
STENCIL DETAIL
CENTER STENCIL ON INSIDE SURFACE OF RIGHT COWL
FIG. 3
REINFORCEMENT INST.
3IN. = 1FT.
.098 HOLE
3/32 RIVET
11 REQ.
EQUALLY SPACED
12358-4
1 IN. SQUARES
SPOTWELD APPROX.
1 1/4 APART
-2 COWL L
-3 COWL R
-4 ANGLE
12723
2 REQ.
.191 HOLE
AN3-4
81342-19 (2 REQ.)
#22M02 E.S.N
4 REQ.
.098 HOLE
3/32 x 1/4 L BR. HD. RIVET (10 REQ.)
3/32 x 3/8 L BR. HD. RIVET (1 REQ.)
12359
12360 LOCATED ON SECOND RIVET FROM TOP
SECTION B-B
FULL SIZE
SECTION A-A
FULL SIZE
FIG. 1
TRAILING EDGE FORMING DETAIL
ANGLE (SAME ON BOTH ENDS)
COWL
45°
SECTION C-C
FULL SIZE
NOTE:
1. COWL SHOWN FLATTENED. FORM LEADING EDGE TO FIT NOSE COWL. FORM TRAILING EDGE AS SHOWN IN FIG. 1.
2. PARTS MARKED L USED ON LEFT ASSY. ONLY. PARTS MARKED R USED ON RIGHT ASSY. ONLY.
13029 L.H. SHOWN
13029-1 R.H. OPPOSITE EXCEPT AS NOTED
PART No. | No. REQ. | SIZE | DESCRIPTION | MATERIAL
4 | #22M02 ELASTIC STOP NUT
1 | 3/32 x 3/8 L. | 2S ALUM. BR HD RIVET
21 | 3/32 x 1/4 L.
AN3-4 | 4 | BOLT
81342-19 | 8 | WASHER
12723 | 2 | FASTENER ASSY.
12360 | 1 | STUD
12359 | 1 | CHANNEL
12358-4 | 1 | HINGE
-4 | 1 | .032 x 1 3/8 x 20 7/8 | 52S-1/2 H. ALUM.
-3 | 1 | .032 x 23 3/16 x 29 7/16 | 52S 1/2 H. ALUM.
-2
SCALE 8 IN = 1 FT. & NOTED
TOTAL WT.-LBS.
FINISH-PIPER SPECIFICATION #10
MANUFACTURING PRACTICES-PIPER SPECIFICATION #9
COWL ASSEMBLY-ENGINE SIDE
MODEL | PER PLANE | NEXT ASSEMBLY | SUPERSEDES | SUP. BY
THIS DRAWING IS THE PROPERTY OF THE PIPER AIRCRAFT CORP. AND ITS POSSESSION BY UNAUTHORIZED PERSONS SHALL NOT BE CONSTRUED AS PERMISSION TO REPRODUCE FOR SALE, IN WHOLE OR IN PART, ANY DEVICES SHOWN THEREON.
A | DIMENSIONS REVISED | 11-7-50 | HRK
LET. | REVISION | DATE | BY
PIPER AIRCRAFT CORP.
LOCK HAVEN, PENNA.
H.R.K. | J.C.B.
9-28-50 | 10-3-50
DRAFTSMAN | CHECKER | STANDARDS
13029
867

A867

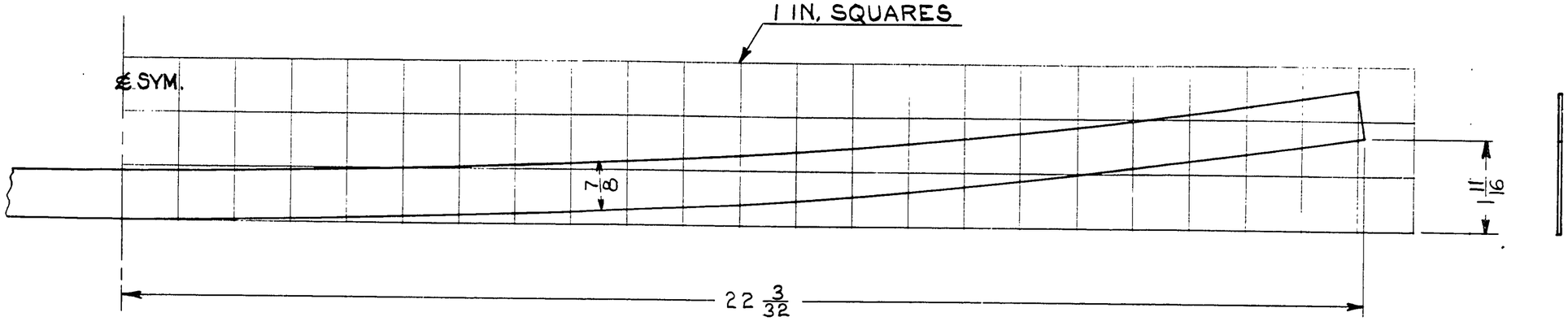

-2 BOTTOM STRIP

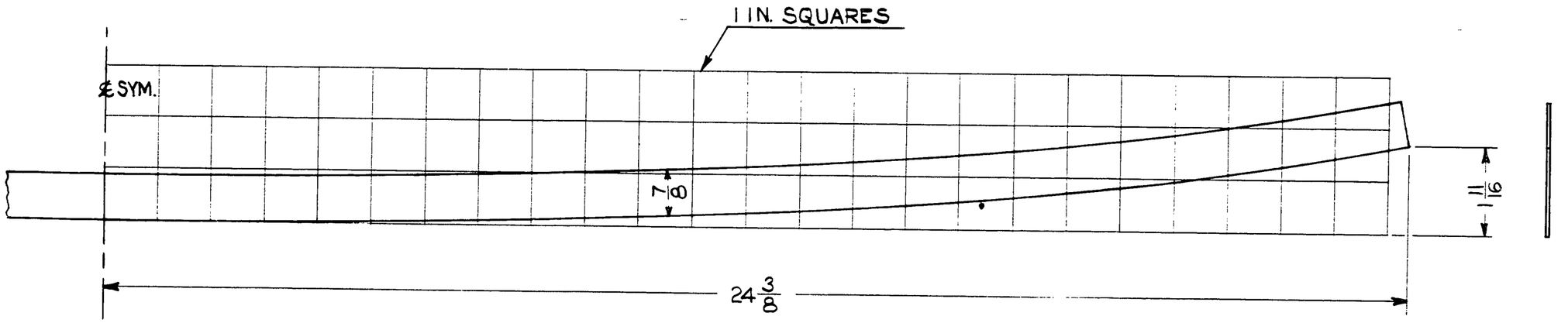

-3 TOP STRIP

PART No.	No. REQ.	SIZE	DESCRIPTION
-3	1	.040 x 2 5/8 x 48 3/4	52 S-½ H. ALUM.
-2	1	.040 x 2 5/8 x 44 3/16	52 S-½ H. ALUM.

MATERIAL

SCALE 6 IN. = 1 FT. | TOTAL WT.—LBS.

FINISH—PIPER SPECIFICATION #10

MANUFACTURING PRACTICES—PIPER SPECIFICATION #9

STRIPS - NOSE COWL REINFORCEMENT

LET.	REVISION	DATE	BY

MODEL	PER PLANE	NEXT ASSEMBLY	SUPERSEDES	SUP. BY

THIS DRAWING IS THE PROPERTY OF THE PIPER AIRCRAFT CORP. AND ITS POSSESSION BY UNAUTHORIZED PERSONS SHALL NOT BE CONSTRUED AS PERMISSION TO REPRODUCE FOR SALE, IN WHOLE OR IN PART, ANY DEVICES SHOWN THEREON.

PIPER AIRCRAFT CORP.
LOCK HAVEN, PENNA.

DRAFTSMAN	CHECKER	STANDARDS
H. R. K. 9-28-50	J. C. B. 10-3-50	

13030

562

A 562

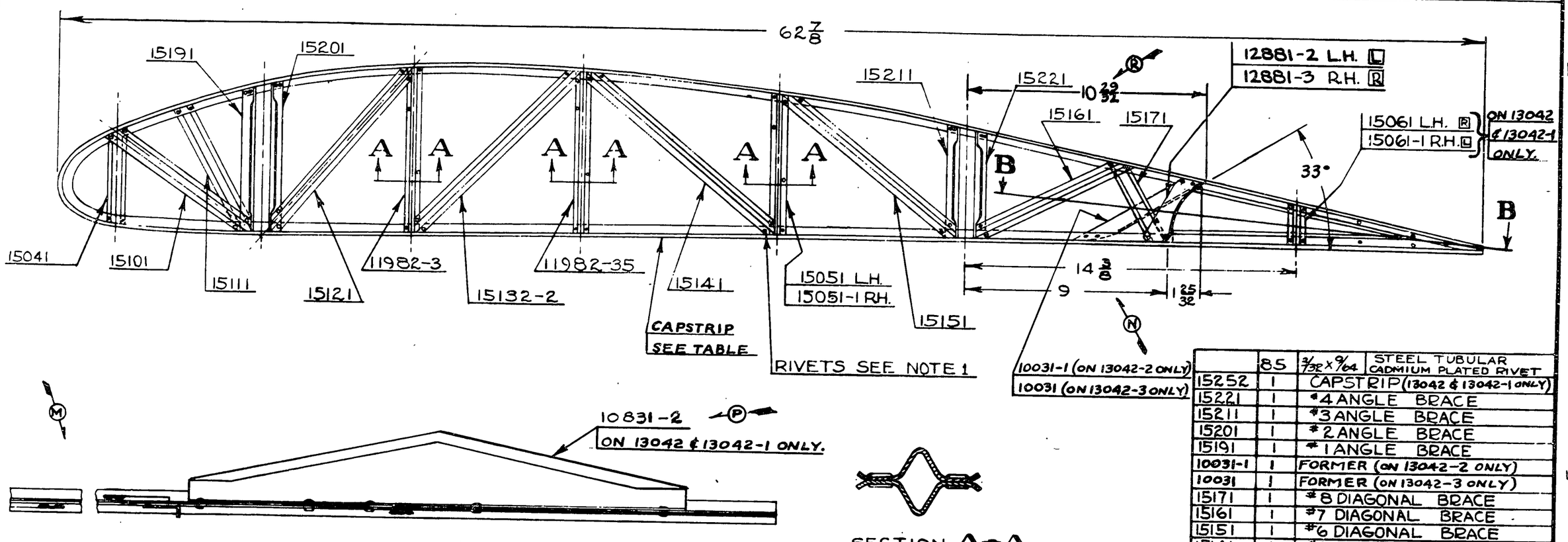

ASS'Y. NO.	CAPSTRIP NO.	REMARKS
13042	15252	L.H. SHOWN
13042-1	15252	R.H. AS NOTED
13042-2	15262	L.H. AS NOTED
13042-3	15262	R.H. AS NOTED

NOTES:

1. ALL RIVETS 3/32 (.098 HOLE)
2. ON RIGHT ASSEMBLY PARTS 12881-3, 10031 10831-2 & 15061 ARE INSTALLED OPPOSITELY FROM CORRESPONDING PARTS SHOWN
3. FALSE SPAR FORMERS TO BE ALIGNED WITH SAME PARTS ON OTHER RIBS WHEN ASSEMBLED
4. FOR INFORMATION NOT SHOWN SEE DWG. 13052
5. PARTS MARKED L USED ON LEFT HAND ASS'Y ONLY
6. PARTS MARKED R USED ON RIGHT HAND ASS'Y ONLY
7. ON ASS'Y. 13042-2, PARTS 15161 & 15171 ARE INSTALLED OPPOSITELY FROM VIEW SHOWN.

LET.	REVISION	DATE	SR.	BY
R	10 29/32 ADDED	1-24-50		MWG
Q	-2 & -3, TABLE & NOTE #7 ADDED.	1-3-50		J.S.O.
P	10831-2 ADDED TO FACE	11-8-43		C.E.K.
O	J3 MODEL REF. ADDED	8-20-43		I.D.B.
N	14 3/8 WAS 14 5/8	7-30-43		M.G.S.
M	SECTION B-B REVISED	7-30-43		M.G.S.
L	15091, 15091-1, 15[illegible]	7-30-43		M.G.S.
K	REDRAWN & REVISED	5-11-43		R.R.F.

LIMITS, SHOP PRACTICES AND FINISH, UNLESS OTHERWISE NOTED, TO BE IN ACCORDANCE WITH PIPER SPECIFICATIONS 09 AND 020.

MODEL	PER SHIP	NEXT ASSEMBLY	SUPERSEDES	SUPERSEDED BY
J3	1L 1R	15556 13004		
L-4A	1L 1R	13004		

PIPER AIRCRAFT CORP.
LOCK HAVEN, PENNA.

PART No.	No. REQ.	SIZE	DESCRIPTION
		MATERIAL	
	85	3/32 x 9/64	STEEL TUBULAR CADMIUM PLATED RIVET
15252	1	CAPSTRIP (13042 & 13042-1 ONLY)	
15221	1	#4 ANGLE BRACE	
15211	1	#3 ANGLE BRACE	
15201	1	#2 ANGLE BRACE	
15191	1	#1 ANGLE BRACE	
10031-1	1	FORMER (ON 13042-2 ONLY)	
10031	1	FORMER (ON 13042-3 ONLY)	
15171	1	#8 DIAGONAL BRACE	
15161	1	#7 DIAGONAL BRACE	
15151	1	#6 DIAGONAL BRACE	
15141	1	#5 DIAGONAL BRACE	
15132-2	1	#4 DIAGONAL BRACE	
15121	1	#3 DIAGONAL BRACE	
15111	1	#2 DIAGONAL BRACE	
15101	1	#1 DIAGONAL BRACE	
15262	1	CAPSTRIP (ON 13042-2 & 13042-3 ONLY)	
15061-1	1	#5 VERTICAL BRACE. ON 13042 & 13042-1 ONLY.	
15061			
15051-1	1	#4 VERTICAL BRACE	
15051	1		
15041	1	#1 VERTICAL BRACE	
12881-3	1	FORMER	
12881-2			
11982-35	2	#3 VERTICAL BRACE	
11982-3	2	#2 VERTICAL BRACE	
10831-2	2	REINFORCEMENT ON 13042 & 13042-1 ONLY.	

SCALE 3" = 1 FT. & NOTED

RIB ASSEMBLY— WING AILERON INBOARD

DRAWN	CHECKED	APPROVED
R. FRANK 5-11-43	L. E. K. 5-13-43	

13042

563

A 563

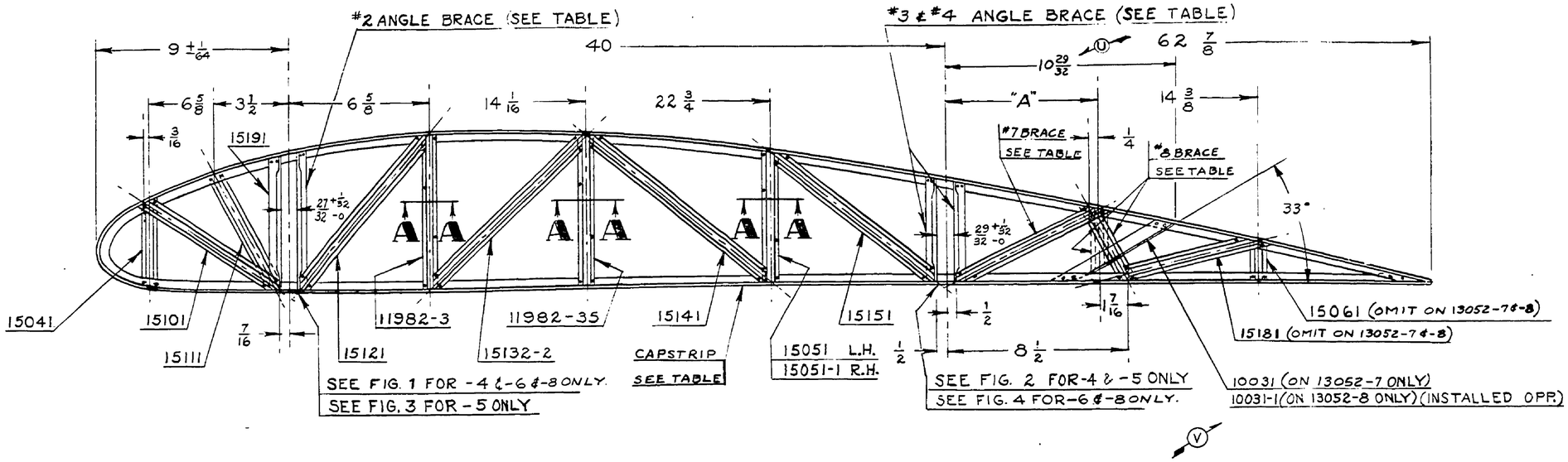

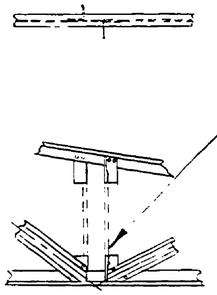

FIG. 4
#3 & #4 ANGLE BRACE
-6 & -8 ONLY.

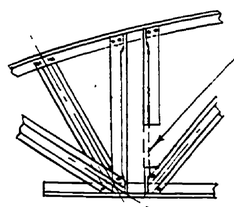

FIG. 1
#2 ANGLE BRACE
-4 ONLY

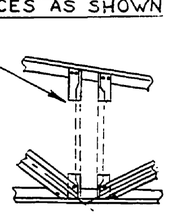

FIG. 2
#3 & #4 ANGLE BRACE
-4 & -5 ONLY

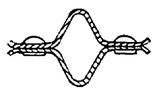

SECTION A-A
TWICE SIZE

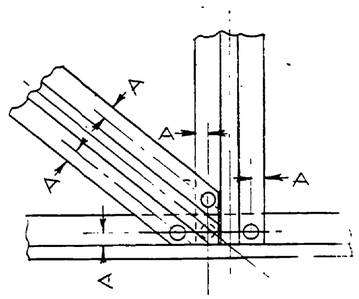

A - 1/8 MIN.
TYPICAL JOINT
FULL SIZE

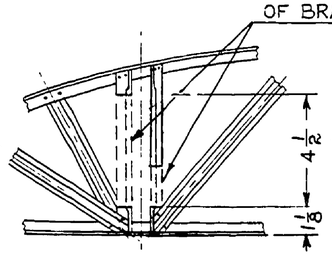

FIG. 3
#1 & #2 ANGLE BRACES
-5, -6 & -8 ONLY

ASS'Y. NO.	#2 BRACE	#3 BRACE	#4 BRACE	#7 BRACE	#8 BRACE	CAPSTRIP.	"A" DIM.
13052-2	15201	15211	15221	15161	15171	15252	7
13052-3	15201	15231	15241	15161	15171	15252	7
13052-4	15321	16141	16151	15161	15171	15252	7
13052-5	15321	16141	16151	15161	15171	15252	7
13052-6	15321	16141-1	16151	15161	15171	15252	7
13052-7	15201	15211	15221	15991	16011	15262	6 11/16
13052-8	15321	16141-1	16151	15991	16011	15262	6 11/16

NOTES: 1. ALL RIVETS 3/32 (.098 HOLE).
2. FOR WING FULL RIB OUTLINE SEE DRAWING 13814.

10031-1	1	FORMER	-8 ONLY
15262	1	CAPSTRIP	-7 & -8 ONLY
16011	1	BRACE	-7 & -8 ONLY
15991	1		-7 & -8 ONLY
10031	1	FORMER	-7 ONLY
16141-1	1	#3 ANGLE BRACE	-6 & -8 ONLY.
16151	1	#4 ANGLE BRACE	-4, -5, -6 & -8 ONLY
15241	1		- 3 ONLY
15221	1		-2 & -7 ONLY.
16141	1	#3 ANGLE BRACE	-4, -5 ONLY
15231	1		-3 ONLY
15211	1		-2 & -7 ONLY.
15321	1	#2 ANGLE BRACE	-4, -5, -6 & -8 ONLY.
15201	1		-2-3 & -7 ONLY.
13814	DWG. REF. ONLY	WING FULL RIB OUTLINE	
	73	3/32 x 9/64 L. STL. TUBULAR CD. PLATED RIVET	
15252	1	CAPSTRIP	ON -2, -3, -4, -5 & -6 ONLY.
15191	1	#1 ANGLE BRACE	
15181	1	#9 DIAGONAL BRACE	ON -2, -3, -4 -5 & -6 ONLY.
15171	1	#8 DIAGONAL BRACE	
15161	1	#7 DIAGONAL BRACE	
15151	1	#6 DIAGONAL BRACE	
15141	1	#5 DIAGONAL BRACE	
15132-2	1	#4 DIAGONAL BRACE	
15121	1	#3 DIAGONAL BRACE	
15111	1	#2 DIAGONAL BRACE	
15101	1	#1 DIAGONAL BRACE	
15061	1	#5 VERTICAL BRACE	ON -2, -3, -4 -5 & -6 ONLY
15051-1	1	#4 VERTICAL BRACE	
15051	1		
15041	1	#1 VERTICAL BRACE	
11982-35	2	#3 VERTICAL BRACE	
11982-3	2	#2 VERTICAL BRACE	

PART NO.	NO. REQ.	SIZE	DESCRIPTION
		MATERIAL	

SCALE 3 IN. = 1 FT. & NOTED — TOTAL WT. — LBS.
FINISH — PIPER SPECIFICATION #10
MANUFACTURING PRACTICES — PIPER SPECIFICATION #9

THIS DRAWING IS THE PROPERTY OF THE PIPER AIRCRAFT CORP. AND ITS POSSESSION BY UNAUTHORIZED PERSONS SHALL NOT BE CONSTRUED AS PERMISSION TO REPRODUCE FOR SALE, IN WHOLE OR IN PART. ANY DEVICES SHOWN THEREON

LET.	REVISION	DATE	BY
V	10031-1 WAS 10031 FOR -8		
	-6 & -8 ADDED TO FIG. 3	3-14-50	C.K.
	-6 & -8 REMOVED FROM FIG. 1		
U	10 29/32 WAS 10 25/32	1-24-50	MG
T	-7 & -8 ADDED. TABLE REV.	1-4-50	J.O.
S	-6, FIG. 4 & 16141-1 ADDED	12-9-49	K.O.
R	-5 & FIG. 3 ADDED	11-11-47	H.K
Q	4 ASSY. #2 ANGLE BRACE 15321 W.AS IG13	10-11-46	L.R
P	REDRAWN & REVISED	3-12-46	CLW

MODEL	PER PLANE	NEXT ASSEMBLY	SUPERSEDES	SUP. BY
NOTED	NOTED	NOTED		

PIPER AIRCRAFT CORP.
LOCK HAVEN, PENNA.

RIB ASSEMBLY-
WING FULL

DRAFTSMAN	CHECKER	STANDARDS
C.L.W. 3-12-46	R.E.F. 3-17-46	

13052

776

A776

PART NO.	L	MODEL	PER SHIP	NEXT ASSY	WAS PART NO.
13072-2	72	J3, L-4A, L-4B, TG-8	2	13004	E2-130
13072-3	30 3/4	J3, L-4A, L-4B, TG-8	2	13004	J3-12
13072-4	68 3/4	J3, L-4A, L-4B, TG-8	2	13004	
13072-5	45 1/2	J3	2	15556	

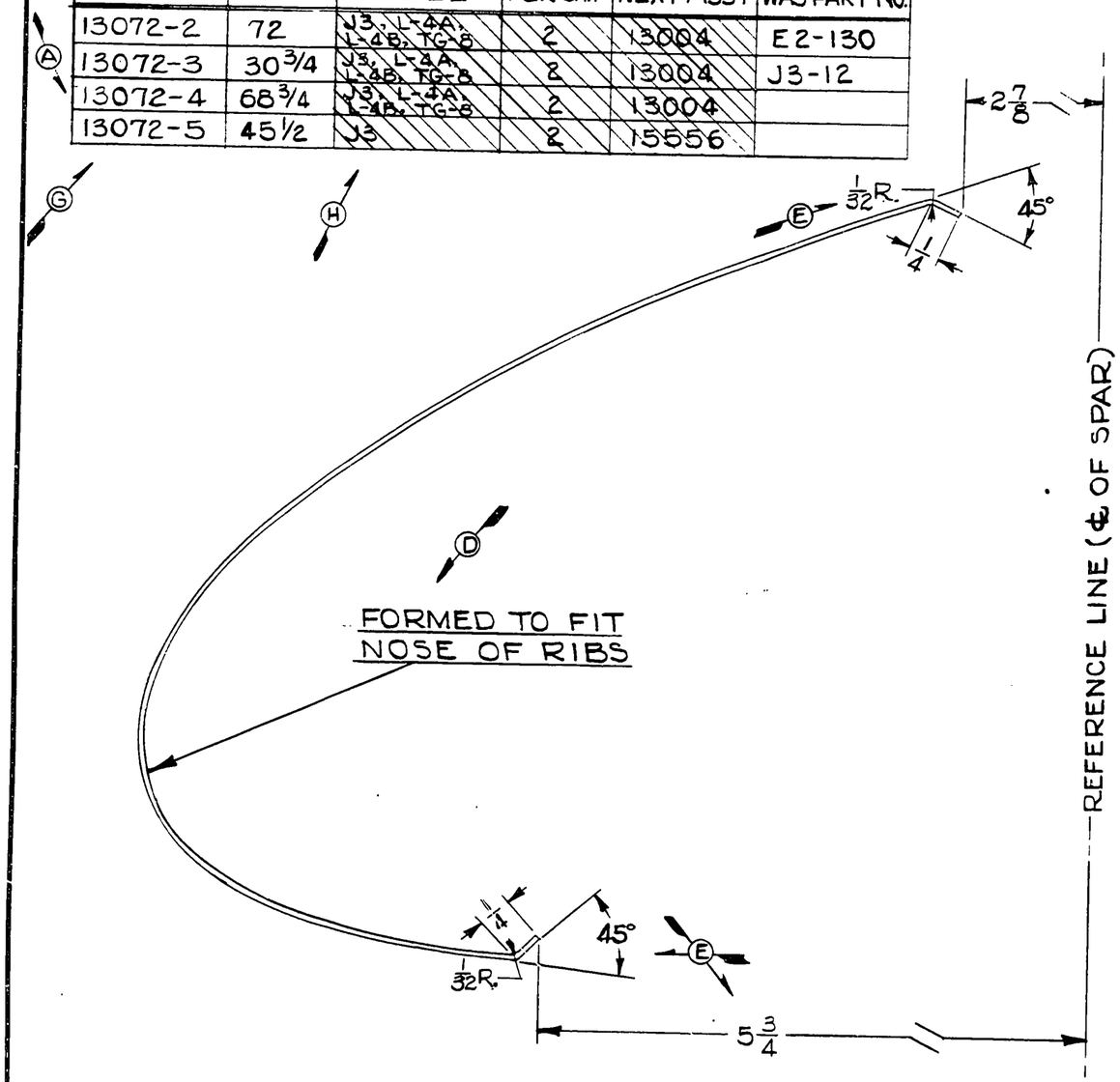

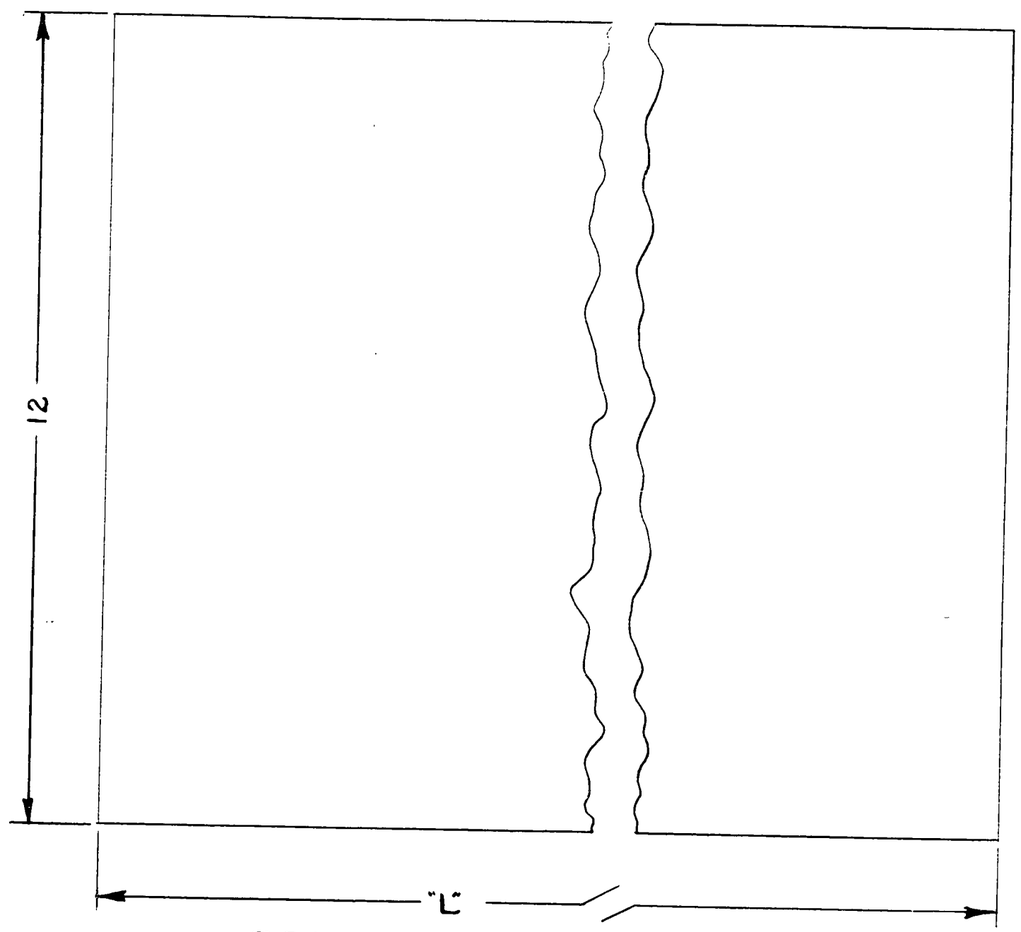

SCALE: HALF SIZE

B F

C

THIS DRAWING IS THE PROPERTY OF THE PIPER AIRCRAFT CORP. AND ITS POSSESSION BY UNAUTHORIZED PERSONS SHALL NOT BE CONSTRUED AS PERMISSION TO REPRODUCE FOR SALE, IN WHOLE OR IN PART, ANY DEVICES SHOWN THEREON

LET.	REVISION	DATE	BY
J	REDRAWN WITHOUT CHANGE	6-1-51	L.E.M.
H	J3 MODEL REF. ADDED FOR -5	10-28-43	L.D.B.
G	TABLE REVISED, -5 ADDED	8-30-43	R.R.F.
F	3S0 ALUM. ADDED AS ALT. MAT.	8-3-43	C.E.K.
E	FLANGES ADDED, 5 5/16 WAS 5 11/16	5-4-43	C.E.K.
D	"FORMED" WAS "BENT"	4-26-43	C.E.K.
C	13102 REMOVED, 2 PER SHIP ADDED	3-16-43	C.K.
B	3S 1/2 H. ALUM. WAS 3S H. ALUM.	2-13-43	R.E.T.
A	PART NO. -4 ADDED	2-17-42	C.E.V.

MODEL	PER PLANE	NEXT ASSEMBLY	SUPERSEDES	SUP. BY
NOTED	NOTED	NOTED	13-AN2	

PIPER AIRCRAFT CORP.
LOCK HAVEN, PENNA.

PART NO.	NO. REQ.	SIZE	DESCRIPTION
			3S-O ALUMINUM OR 3S-1/2 H. ALUMINUM
		.016 x 12 x NOTED	

MATERIAL

SCALE FULL SIZE & NOTED | TOTAL WT.-LBS.

FINISH—PIPER SPECIFICATION #10

MANUFACTURING PRACTICES—PIPER SPECIFICATION #9

COVER - WING LEADING EDGE

DRAFTSMAN	CHECKER	STANDARDS
W.N. EMERY 11-17-41	F.B. 12-5-41	

13072

B

564

A564

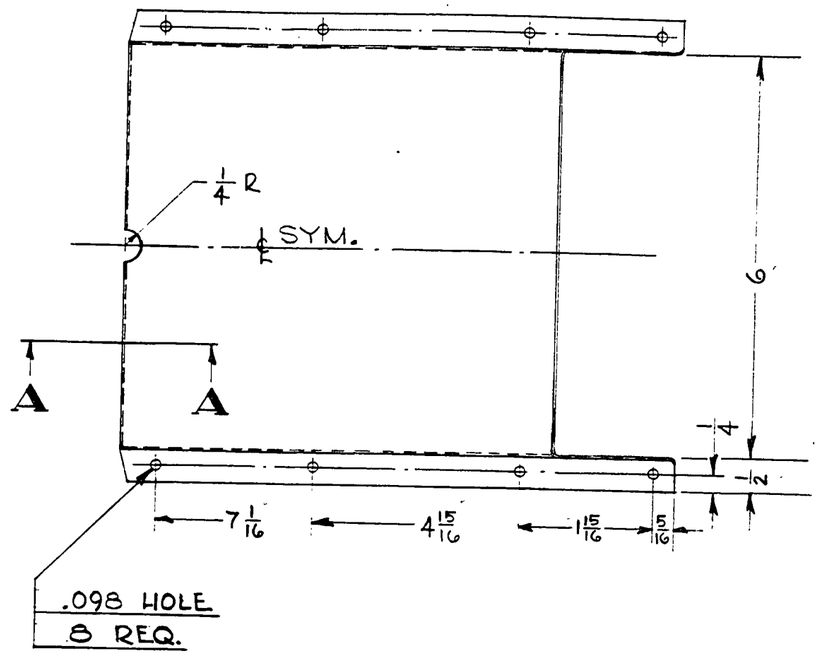

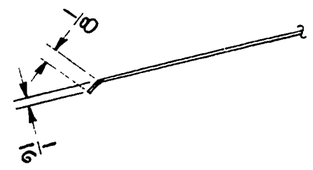

SECTION A-A
FULL SIZE

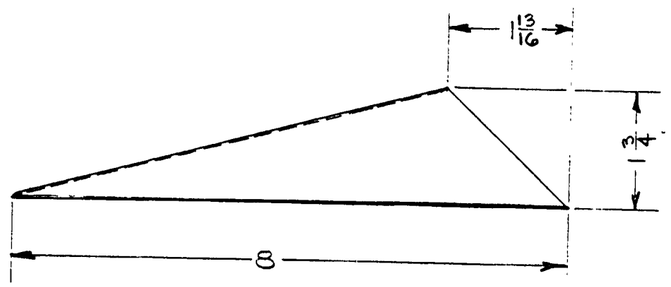

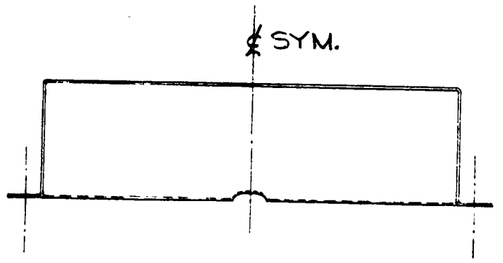

THIS DRAWING IS THE PROPERTY OF THE PIPER AIRCRAFT CORP. AND ITS POSSESSION BY UNAUTHORIZED PERSONS SHALL NOT BE CONSTRUED AS PERMISSION TO REPRODUCE FOR SALE, IN WHOLE OR IN PART, ANY DEVICES SHOWN THEREON

LET.	REVISION	DATE	BY

MODEL	PER PLANE	NEXT ASSEMBLY	SUPERSEDES	SUP. BY

PIPER AIRCRAFT CORP.
LOCK HAVEN, PENNA.

PART No.	NO. REQ.	SIZE	DESCRIPTION
		.032 X 7 13/16 X 11 1/4	35-1/2 H ALUM.
		MATERIAL	

SCALE 6 IN. = 1 FT. & NOTED — TOTAL WT.—LBS.

FINISH—PIPER SPECIFICATION #10

MANUFACTURING PRACTICES—PIPER SPECIFICATION #8

SCOOP - BOTTOM COWL AIR

DRAFTSMAN	CHECKER	STANDARDS
M.G. 11-8-50	H.R.K. 11-10-50	

13099

565

A564

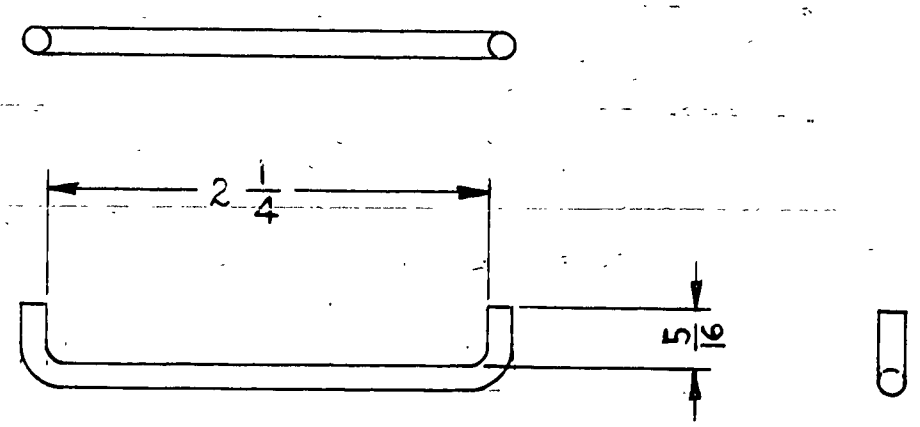

		1/8 DIA. x 3 1/8	WELD ROD
PART No.	No. REQ.	SIZE	DESCRIPTION
		MATERIAL	
SCALE FULL SIZE		TOTAL WT.—LBS.	
FINISH—PIPER SPECIFICATION #10			
MANUFACTURING PRACTICES—PIPER SPECIFICATION #9			

MODEL	PER PLANE	NEXT ASSEMBLY	SUPERSEDES	SUP. BY

THIS DRAWING IS THE PROPERTY OF THE PIPER AIRCRAFT CORP. AND ITS POSSESSION BY UNAUTHORIZED PERSONS SHALL NOT BE CONSTRUED AS PERMISSION TO REPRODUCE FOR SALE, IN WHOLE OR IN PART, ANY DEVICES SHOWN THEREON.

LET.	REVISION	DATE	BY

PIPER AIRCRAFT CORP.
LOCK HAVEN, PENNA.

ROD-SHOULDER HARNESS GUIDE

C. E. K.	H. R. K.		
11-16-50	11-17-50		13126
DRAFTSMAN	CHECKER	STANDARDS	

155

A155

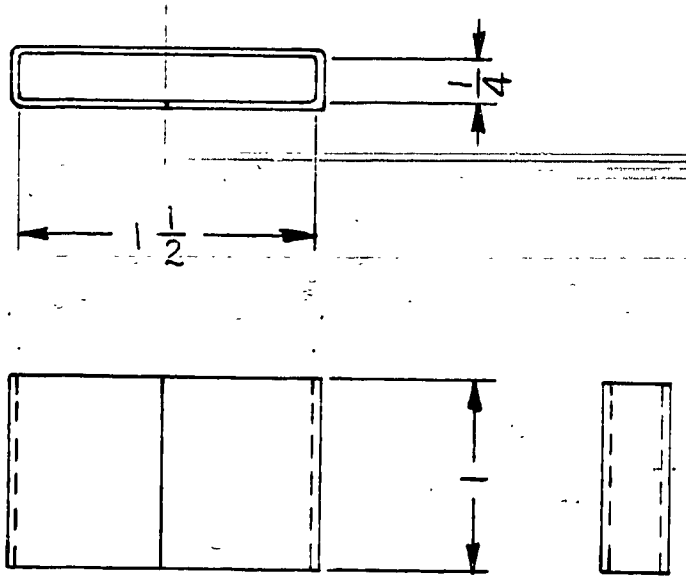

NOTE:

1. CHROME PLATE & BUFF TO HIGH POLISH.

PART No.	No. REQ.	SIZE	DESCRIPTION / MATERIAL
		.032 × 1 × 3 3/4	#1025 STL.

SCALE FULL SIZE | TOTAL WT.–LBS.

FINISH–PIPER SPECIFICATION #10

MANUFACTURING PRACTICES–PIPER SPECIFICATION #9

KEEPER– SHOULDER HARNESS STRAP

LET.	REVISION	DATE	BY

MODEL	PER PLANE	NEXT ASSEMBLY	SUPERSEDES	SUP. BY

THIS DRAWING IS THE PROPERTY OF THE PIPER AIRCRAFT CORP. AND ITS POSSESSION BY UNAUTHORIZED PERSONS SHALL NOT BE CONSTRUED AS PERMISSION TO REPRODUCE FOR SALE, IN WHOLE OR IN PART, ANY DEVICES SHOWN THEREON.

PIPER AIRCRAFT CORP.
LOCK HAVEN, PENNA.

DRAFTSMAN	CHECKER	STANDARDS
C. E. K. 11-16-50	H. R. K. 11-17-50	

13127

156

A 156

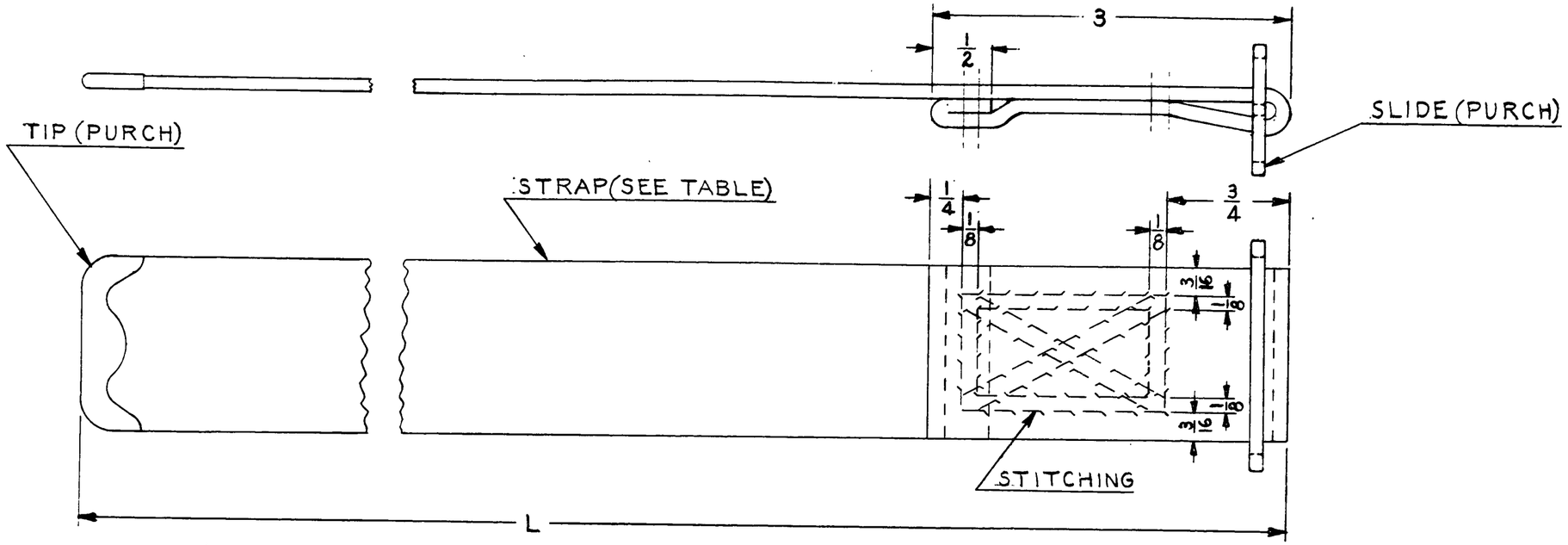

ASSY. NO.	STRAP NO.	L	REMARKS
13128-2	13128-4	76	FRONT SEAT
13128-3	13128-5	62½	REAR SEAT

	1	2 FT. L.	#16-4 GLAZED FIN. MAROON THREAD
	1	TIP-1½ IN. T.S. TIP STL. NICKEL FIN. PURCH. WATERBURY BUCKLE CO.	
	1	SLIDE #88½-1½ STL. NICKEL FIN. PURCH. WATERBURY BUCKLE CO.	
-5	1	1/8 x 1½ x NOTED	COTTON WEBBING-RUSCO #8464/12
-4			O.D. M.R. #1628 PURCH. RUSSEL MFG. CO.
PART NO.	No. REQ.	SIZE	DESCRIPTION MATERIAL

THIS DRAWING IS THE PROPERTY OF THE PIPER AIRCRAFT CORP. AND ITS POSSESSION BY UNAUTHORIZED PERSONS SHALL NOT BE CONSTRUED AS PERMISSION TO REPRODUCE FOR SALE, IN WHOLE OR IN PART. ANY DEVICES SHOWN THEREON

LET.	REVISION	DATE	BY

MODEL	PER PLANE	NEXT ASSEMBLY	SUPERSEDES	SUP. BY

PIPER AIRCRAFT CORP.
LOCK HAVEN, PENNA.

SCALE FULL SIZE — TOTAL WT.—LBS.

FINISH—PIPER SPECIFICATION #10

MANUFACTURING PRACTICES—PIPER SPECIFICATION #9

STRAP ASSEMBLY—
SHOULDER HARNESS

DRAFTSMAN	CHECKER	STANDARDS
C. E. K. 11-17-50	H. R. K. 11-17-50	

13128

566

A 566

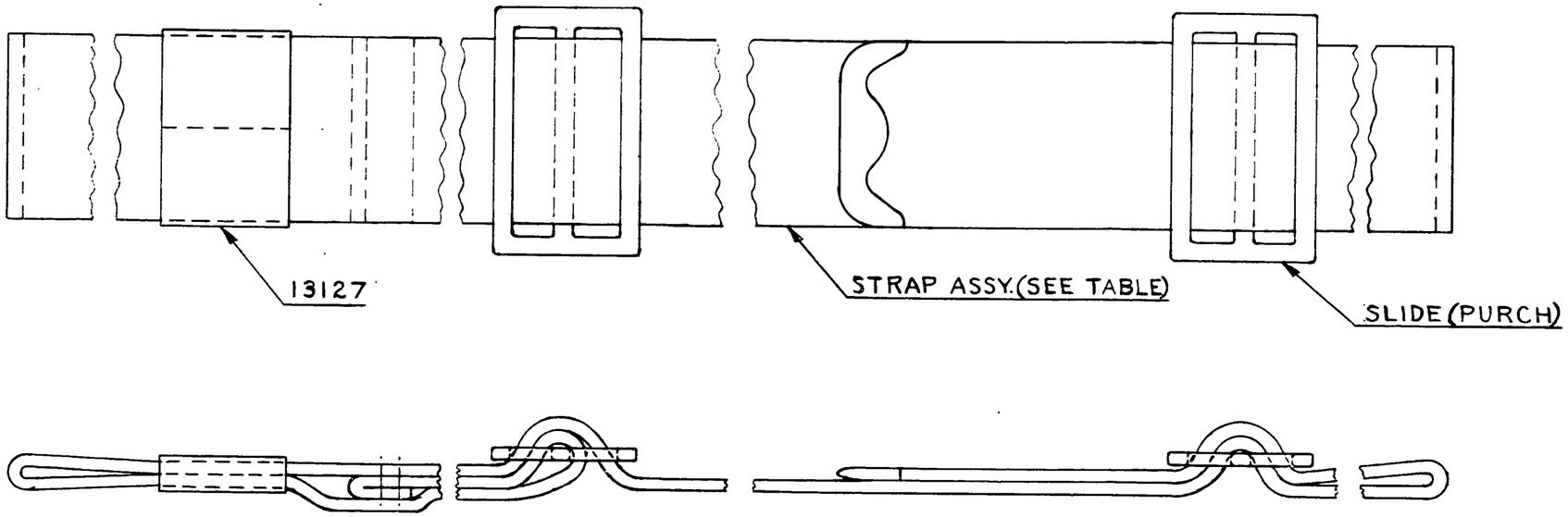

ASSY. NO.	STRAP ASSY. NO.	REMARKS
13129-2	13128-2	FRONT SEAT
13129-3	13128-3	REAR SEAT

	1	SLIDE #88¼-1½ STL. NICKEL FIN.
		PURCH. WATERBURY BUCKLE CO.
13127	1	KEEPER
13128-3	1	STRAP ASSY
13128-2		STRAP ASSY
PART NO.	NO. REQ.	NAME / MATERIAL

SCALE FULL SIZE — TOTAL WT.—LBS.

FINISH—PIPER SPECIFICATION #10

MANUFACTURING PRACTICES—PIPER SPECIFICATION #9

STRAP ASSEMBLY — SHOULDER HARNESS (COMPLETE)

THIS DRAWING IS THE PROPERTY OF THE PIPER AIRCRAFT CORP. AND ITS POSSESSION BY UNAUTHORIZED PERSONS SHALL NOT BE CONSTRUED AS PERMISSION TO REPRODUCE FOR SALE, IN WHOLE OR IN PART, ANY DEVICES SHOWN THEREON

LET.	REVISION	DATE	BY

MODEL	PER PLANE	NEXT ASSEMBLY	SUPERSEDES	SUP. BY

PIPER AIRCRAFT CORP.
LOCK HAVEN, PENNA.

DRAFTSMAN	CHECKER	STANDARDS
C. E. K. 11-17-50	H. R. K. 11-17-50	

13129

567

A 567

WAS A124 / D188-B

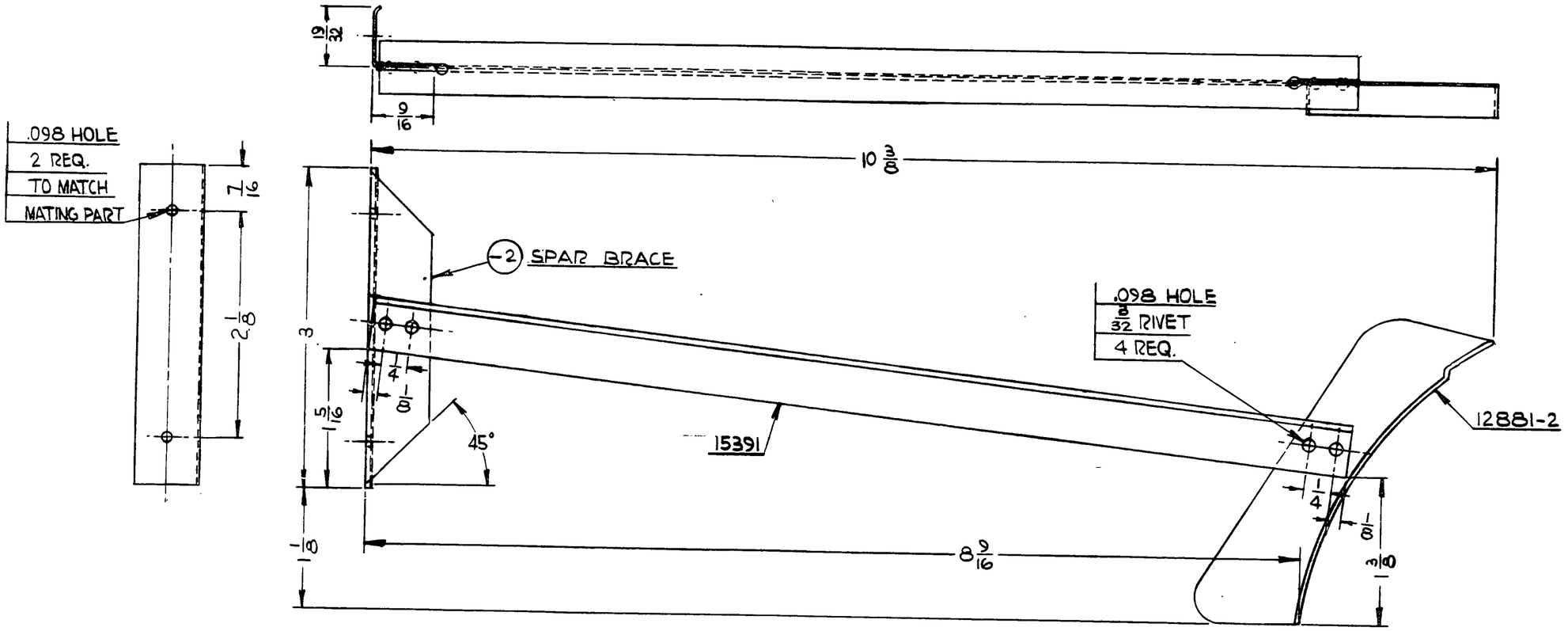

NOTE:

PARTS MARKED THUS A ALSO ON 1941 (MODEL J3)

	4	3/32 x 9/64	CR. PLATED ST'L. TUBULAR RIVET
15391	1	BRACE	
12881-2	1	FORMER	
-2	1	.020 x 1 1/8 x 3	NICRAL OR 61ST ALUM.
PART No.	No. REQ.	SIZE	DESCRIPTION
		MATERIAL	
SCALE FULL SIZE			TOTAL WT.-LBS.
FINISH-PIPER SPECIFICATION #10			
MANUFACTURING PRACTICES-PIPER SPECIFICATION #9			

BRACE ASSEMBLY-AILERON FALSE SPAR

THIS DRAWING IS THE PROPERTY OF THE PIPER AIRCRAFT CORP. AND ITS POSSESSION BY UNAUTHORIZED PERSONS SHALL NOT BE CONSTRUED AS PERMISSION TO REPRODUCE FOR SALE, IN WHOLE OR IN PART, ANY DEVICES SHOWN THEREON

MODEL	PER PLANE	NEXT ASSEMBLY	SUPERSEDES	SUP. BY
J3	1	13122		

LET.	REVISION	DATE	BY
H	REDRAWN & REVISED	2-5-46	L.R.

PIPER AIRCRAFT CORP.
LOCK HAVEN, PENNA.

DRAFTSMAN	CHECKER	STANDARDS
L.R. 2-5-46	E.E.T. 2-7-46	

13131

568

A568

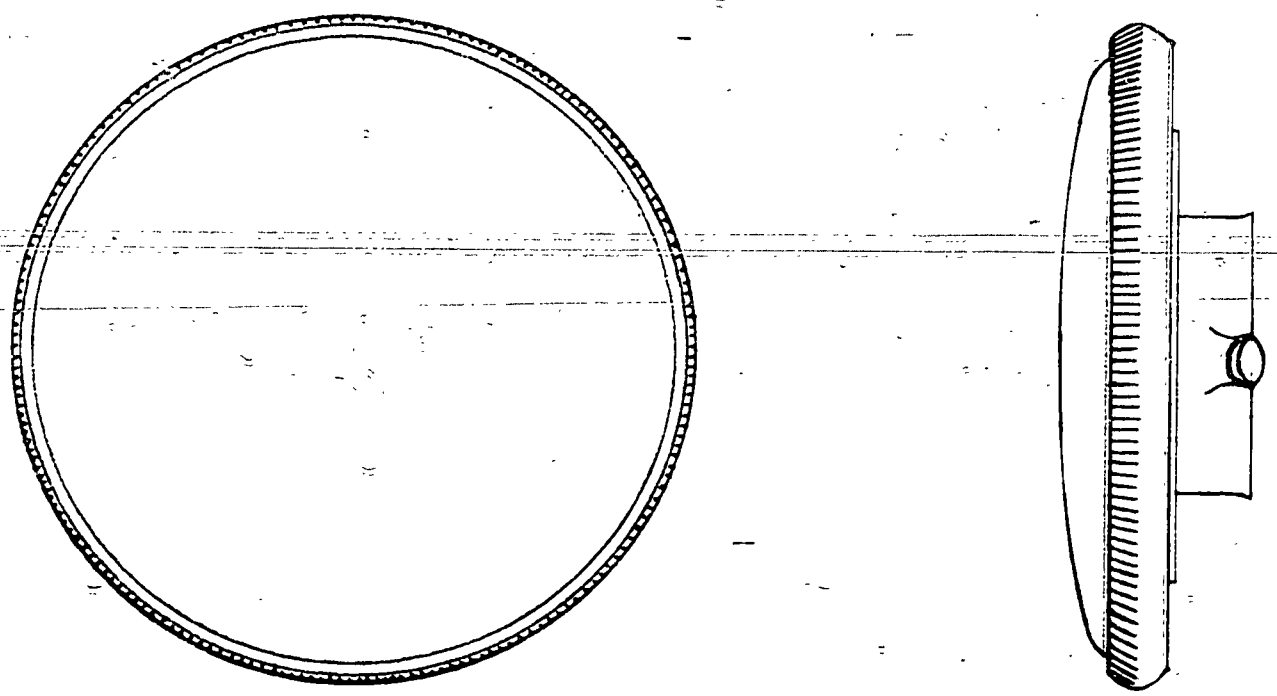

NOTE: CAP TO BE SAND BLASTED & PAINTED

LET.	REVISION	DATE	BY

MODEL	PER PLANE	NEXT ASSEMBLY	SUPERSEDES	SUP. BY

THIS DRAWING IS THE PROPERTY OF THE PIPER AIRCRAFT CORP. AND ITS POSSESSION BY UNAUTHORIZED PERSONS SHALL NOT BE CONSTRUED AS PERMISSION TO REPRODUCE FOR SALE, IN WHOLE OR IN PART, ANY DEVICES SHOWN THEREON.

PIPER AIRCRAFT CORP.
LOCK HAVEN, PENNA.

FUEL TANK CAP # 610
PURCH. BADGER TOOL CO.

PART No.	No. REQ.	MATERIAL

SCALE FULL SIZE | TOTAL WT.–LBS.

FINISH–PIPER SPECIFICATION #10

MANUFACTURING PRACTICES–PIPER SPECIFICATION #3

CAP ASSEMBLY– FUEL TANK

DRAFTSMAN	CHECKER	STANDARDS
M.W.G. 12-18-50	H.R.K. 12-19-50	

13166

157

A 157

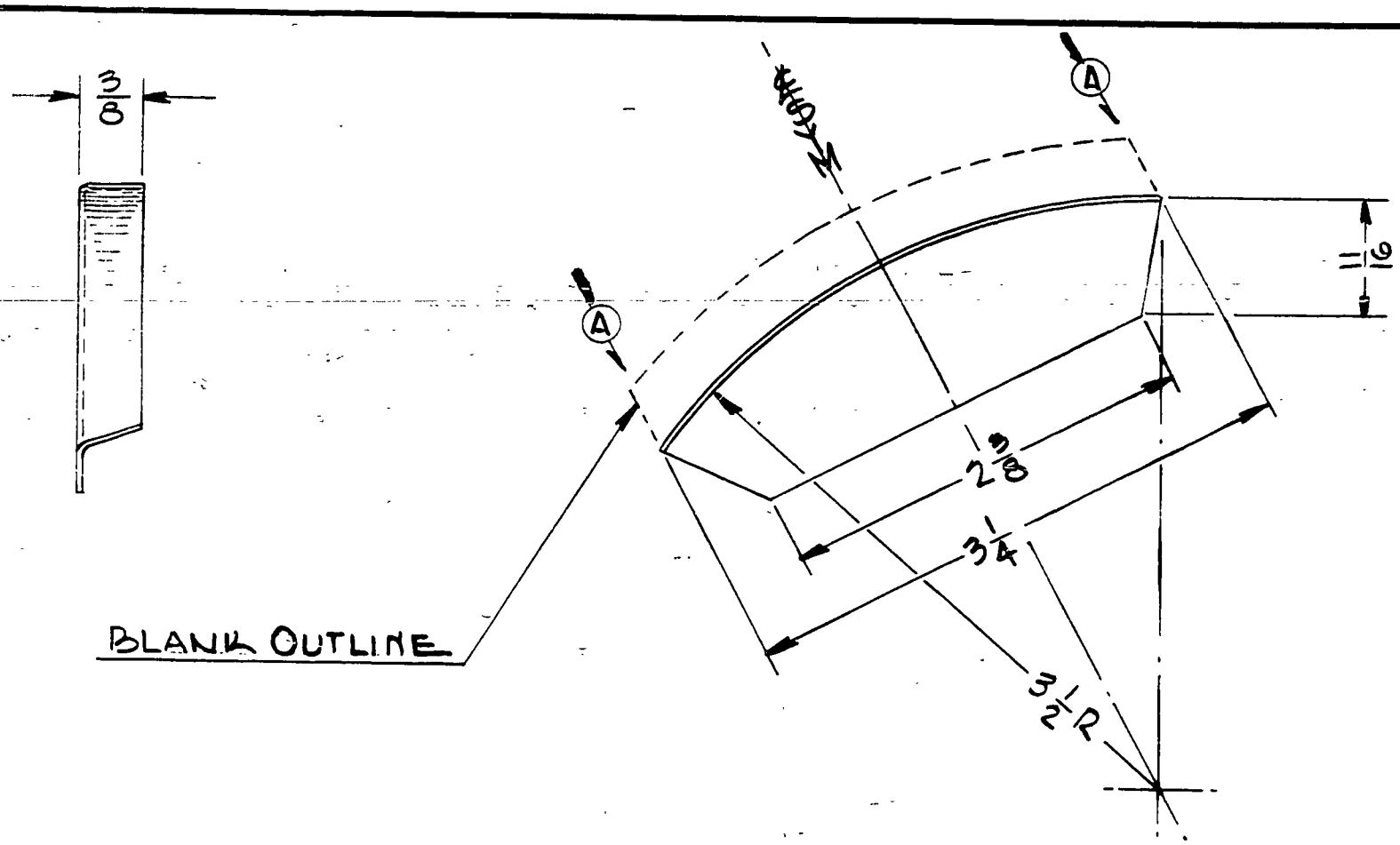

NOTE: BEND RADIUS IS 1/32.

LET	REVISION	DATE	BY
C	REDAWN WITHOUT CHANGE	6-11-51	M.G.
B	3S-½ H. ALUM. WAS 2SH. ALUM.	4-21-44	V.P.
A	BLANK OUTLINE REV. 3¼ WAS 3 5/16	7-31-43	C.E.K.

MODEL	PER PLANE	NEXT ASSEMBLY	SUPERSEDES	SUP. BY
TG-8	4	13212		
L4B	4	13212		
L-4A	4	13212		
J3	4	13212 14393	51063-A	

THIS DRAWING IS THE PROPERTY OF THE PIPER AIRCRAFT CORP. AND ITS POSSESSION BY UNAUTHORIZED PERSONS SHALL NOT BE CONSTRUED AS PERMISSION TO REPRODUCE FOR SALE IN WHOLE OR IN PART ANY DEVICES SHOWN THEREON.

PIPER AIRCRAFT CORP.
LOCK HAVEN, PENNA.

PART NO.	NO. REQ.	SIZE	DESCRIPTION / MATERIAL
		.020 × 1 7/16 × 3¼	3S-½ H. ALUM.

SCALE FULL SIZE | TOTAL WT.—LBS.

FINISH—PIPER SPECIFICATION # 10

MANUFACTURING PRACTICES—PIPER SPECIFICATION # 9

GUSSET - WING FALSE SPAR

DRAFTSMAN	CHECKER	STANDARDS
W.N. EMERY 11-20-41	F.B. 12-16-41	

13171

158

A 158

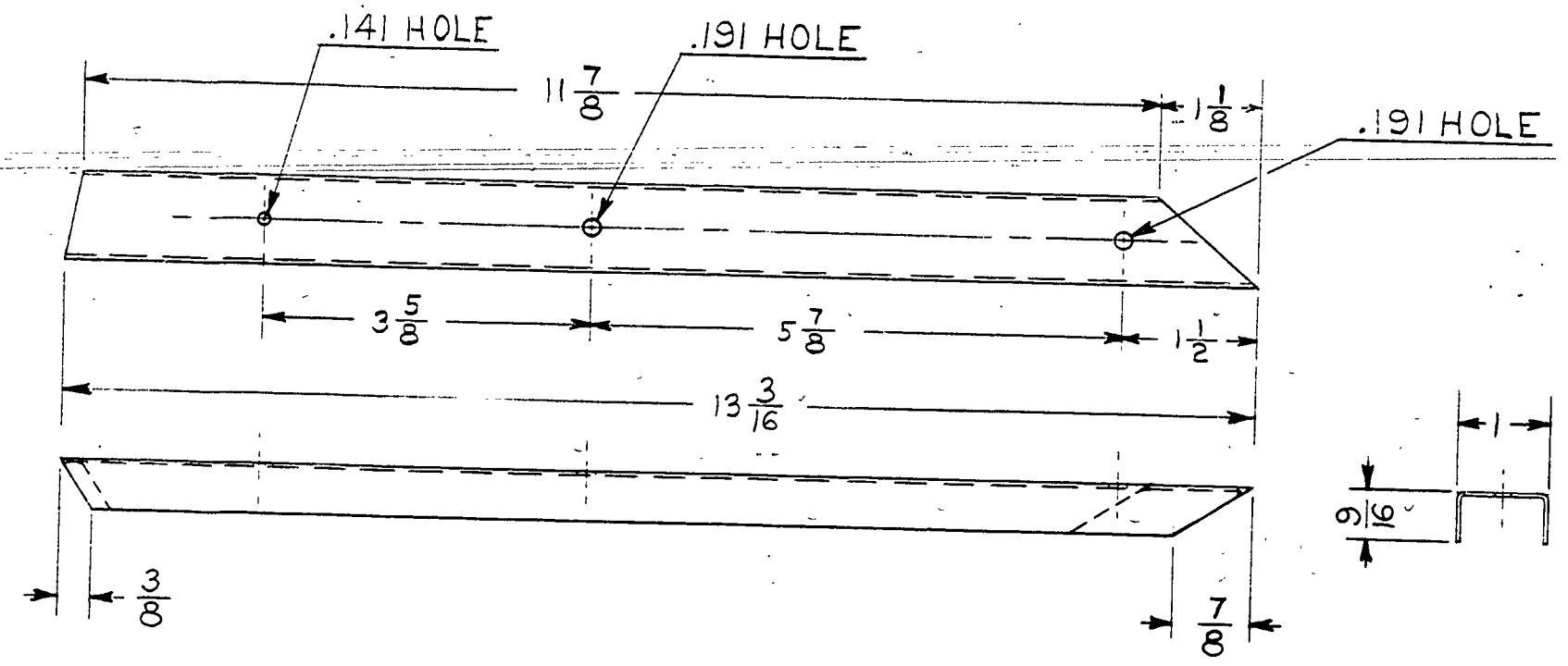

LET.	REVISION	DATE	BY

MODEL	PER PLANE	NEXT ASSEMBLY	SUPERSEDES	SUP. BY

THIS DRAWING IS THE PROPERTY OF THE PIPER AIRCRAFT CORP. AND ITS POSSESSION BY UNAUTHORIZED PERSONS SHALL NOT BE CONSTRUED AS PERMISSION TO REPRODUCE FOR SALE, IN WHOLE OR IN PART, ANY DEVICES SHOWN THEREON.

PIPER AIRCRAFT CORP.
LOCK HAVEN, PENNA.

PART No.	No. REQ.	SIZE	DESCRIPTION
		.032 x 2 1/8 x 13 3/16	#1025 STL.
		MATERIAL	

SCALE 6 IN. = 1 FT. — TOTAL WT.—LBS.

FINISH—PIPER SPECIFICATION #10

MANUFACTURING PRACTICES—PIPER SPECIFICATION #9

CHANNEL — FUSELAGE

DRAFTSMAN	CHECKER	STANDARDS	
H. R. K. 1-4-51	C. E. K. 1-10-51		13177

159

A159

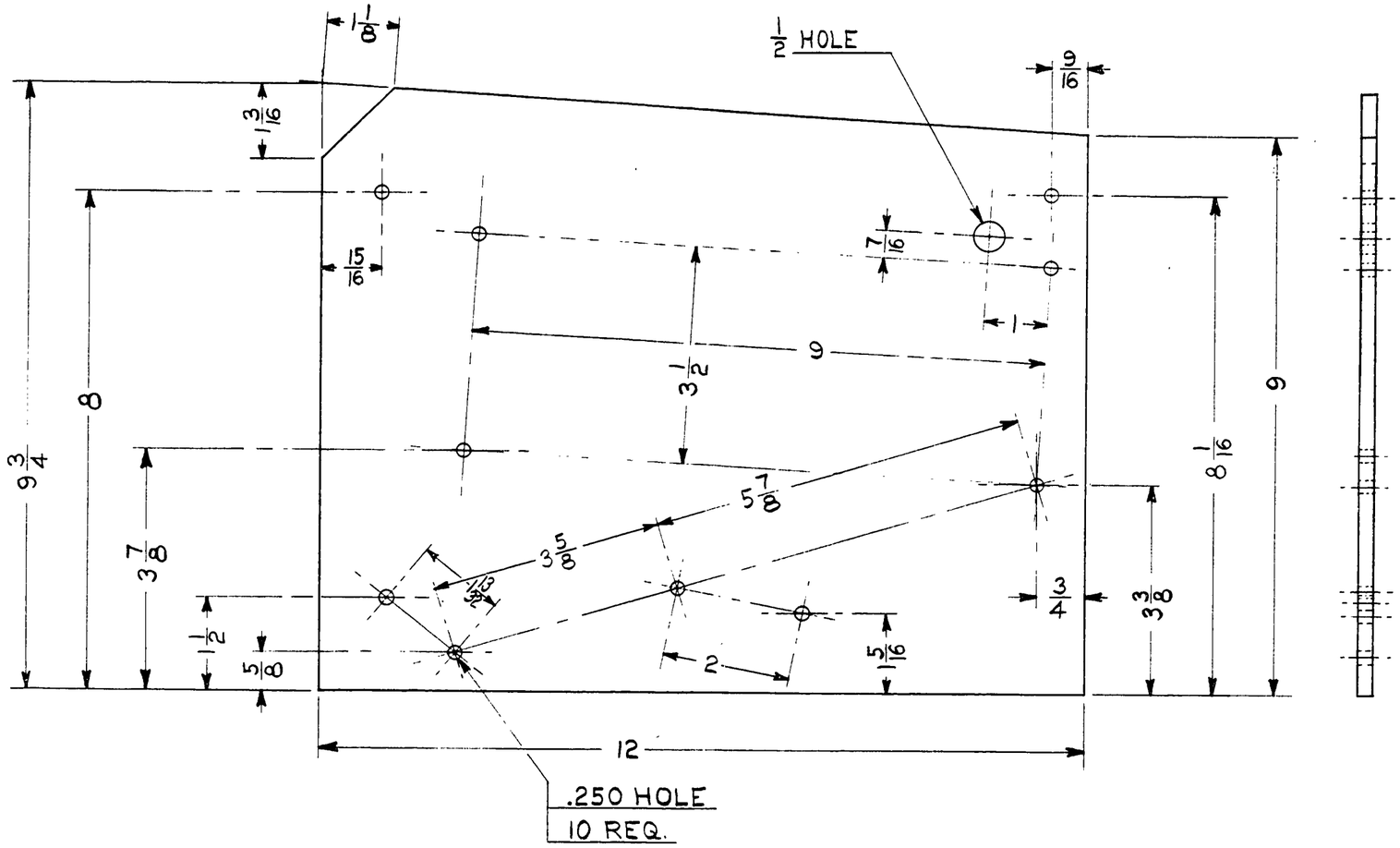

THIS DRAWING IS THE PROPERTY OF THE PIPER AIRCRAFT CORP. AND ITS POSSESSION BY UNAUTHORIZED PERSONS SHALL NOT BE CONSTRUED AS PERMISSION TO REPRODUCE FOR SALE, IN WHOLE OR IN PART, ANY DEVICES SHOWN THEREON

LET.	REVISION	DATE	BY

MODEL	PER PLANE	NEXT ASSEMBLY	SUPERSEDES	SUP. BY

PIPER AIRCRAFT CORP.
LOCK HAVEN, PENNA.

PART No.	No. REQ.	SIZE	DESCRIPTION
		1/4 × 9 3/4 × 12	3 PLY FIR PLYWOOD

MATERIAL

SCALE 6 IN. = 1 FT. — TOTAL WT.–LBS.

FINISH–PIPER SPECIFICATION #10

MANUFACTURING PRACTICES–PIPER SPECIFICATION #9

BOARD – BATTERY MOUNTING

DRAFTSMAN	CHECKER	STANDARDS
H. R. K. 1-5-51	C. E. K. 1-10-51	

13178

569

A 569

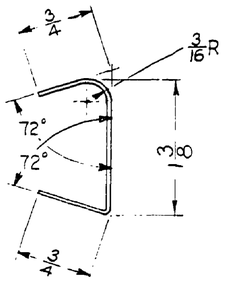

SECTION A–A
FULL SIZE

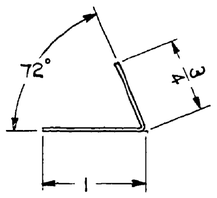

SECTION B–B
TYPICAL SECTION
FULL SIZE

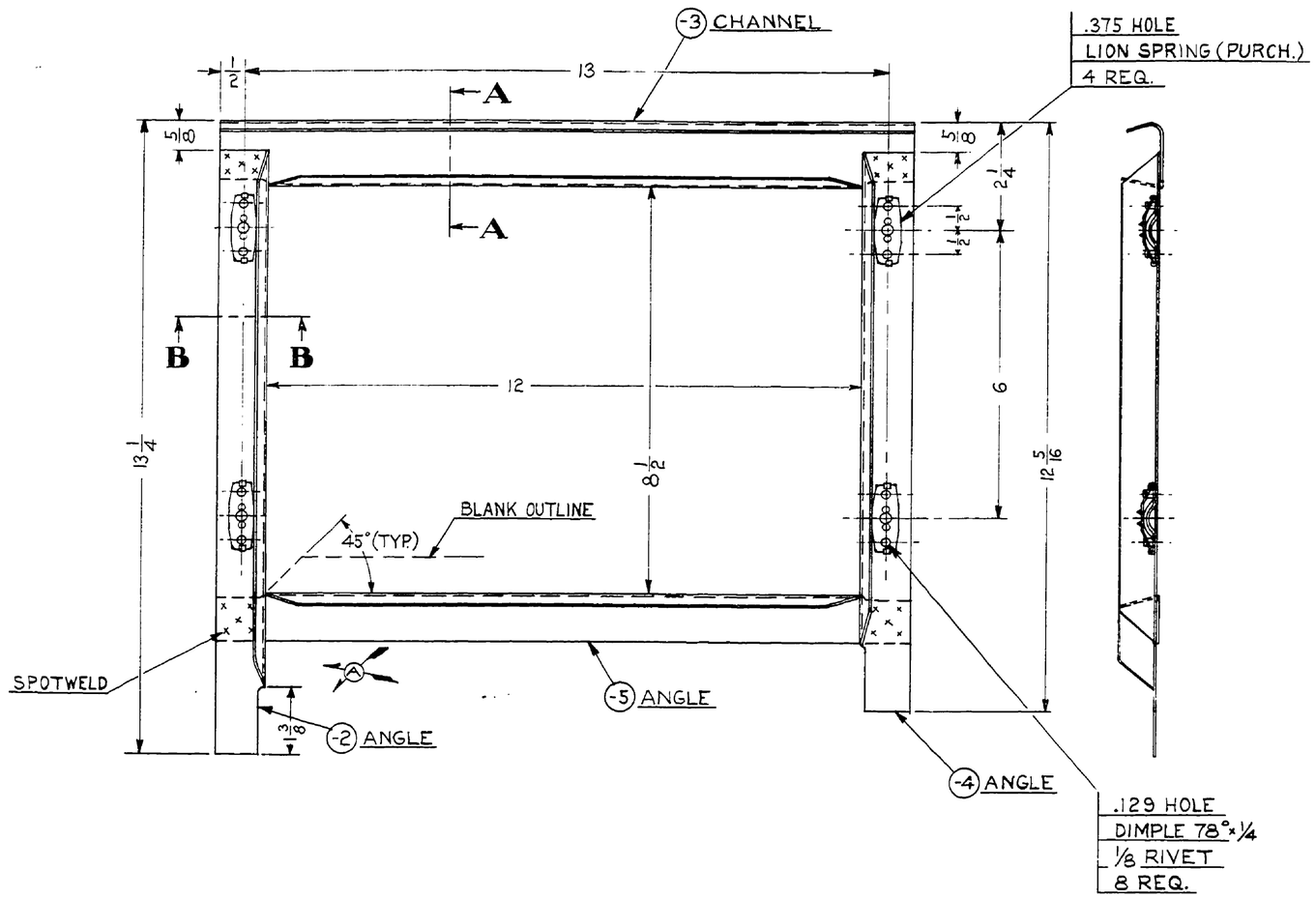

	4	LION SPRING #5-295 PURCH. LION FASTENERS INC.	
	8	1/8 x 3/8 L.	2 S ALUM. CSK. HD. RIVET
-5	1	.032 x 1 3/4 x 14	3S-1/2 H. ALUM.
-4	1	.032 x 1 3/4 x 11 11/16	3S-1/2 H. ALUM.
-3	1	.032 x 2 7/8 x 14	3S-1/2 H. ALUM.
-2	1	.032 x 1 3/4 x 12 5/8	3S-1/2 H. ALUM.
PART NO.	NO. REQ.	SIZE	DESCRIPTION
		MATERIAL	

SCALE 6 IN. = 1 FT. & NOTED | TOTAL WT.—LBS.

FINISH—PIPER SPECIFICATION #10

MANUFACTURING PRACTICES—PIPER SPECIFICATION #9

THIS DRAWING IS THE PROPERTY OF THE PIPER AIRCRAFT CORP. AND ITS POSSESSION BY UNAUTHORIZED PERSONS SHALL NOT BE CONSTRUED AS PERMISSION TO REPRODUCE FOR SALE, IN WHOLE OR IN PART, ANY DEVICES SHOWN THEREON

LET.	REVISION	DATE	BY
A	FLANGE REVISED 1 3/8 DIM. ADDED	2-8-51	I.M.M.

MODEL	PER PLANE	NEXT ASSEMBLY	SUPERSEDES	SUP. BY

PIPER AIRCRAFT CORP.
LOCK HAVEN, PENNA.

FRAME ASSEMBLY—
BATTERY ACCESS DOOR

M. R. K.	C. E. K.		
1-8-51	1-10-51		13179
DRAFTSMAN	CHECKER	STANDARDS	

777

A777

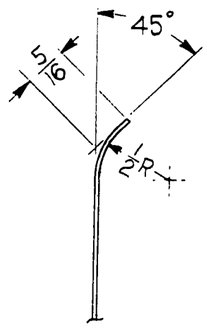

SECTION A—A
FULL SIZE

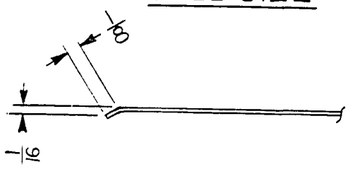

SECTION B—B
TYPICAL SECTION
FULL SIZE

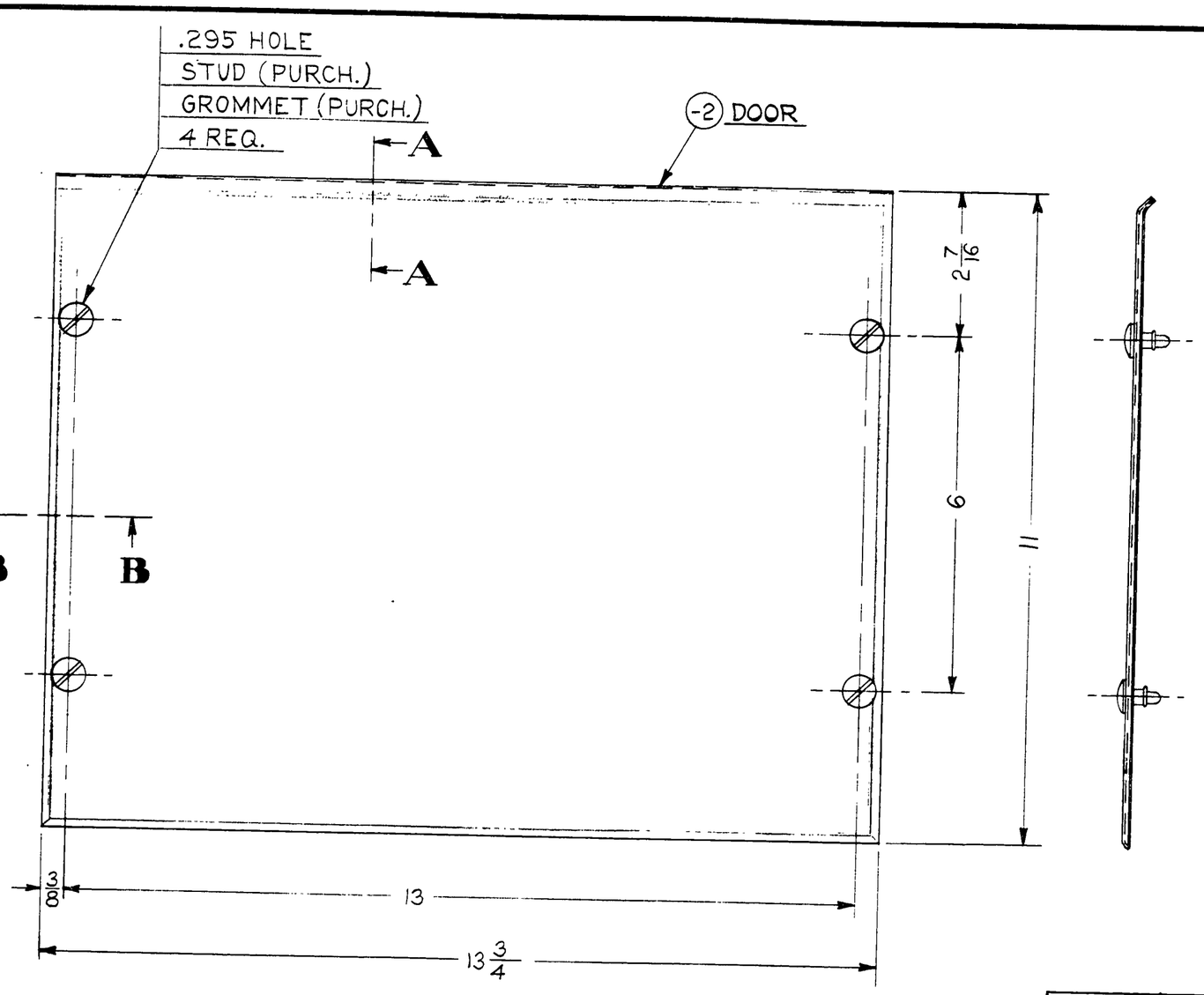

	4	GROMMET #60-5-93	PURCH. LION
	4	STUD #5-0-140	FASTENERS INC
-2	1	.025 × 11 × 13 3/4	24S-T ALUM. ALCLAD
PART No.	No. REQ.	SIZE	DESCRIPTION
		MATERIAL	

SCALE 6 IN. = 1 FT. & NOTED — TOTAL WT.—LBS.

FINISH—PIPER SPECIFICATION #10

MANUFACTURING PRACTICES—PIPER SPECIFICATION #9

DOOR ASSEMBLY—BATTERY ACCESS

LET.	REVISION	DATE	BY

THIS DRAWING IS THE PROPERTY OF THE PIPER AIRCRAFT CORP. AND ITS POSSESSION BY UNAUTHORIZED PERSONS SHALL NOT BE CONSTRUED AS PERMISSION TO REPRODUCE FOR SALE, IN WHOLE OR IN PART, ANY DEVICES SHOWN THEREON

MODEL	PER PLANE	NEXT ASSEMBLY	SUPERSEDES	SUP. BY

PIPER AIRCRAFT CORP.
LOCK HAVEN, PENNA.

DRAFTSMAN	CHECKER	STANDARDS
H. R. K. 1-8-51	C. E. K. 1-10-51	

13180

570

A570

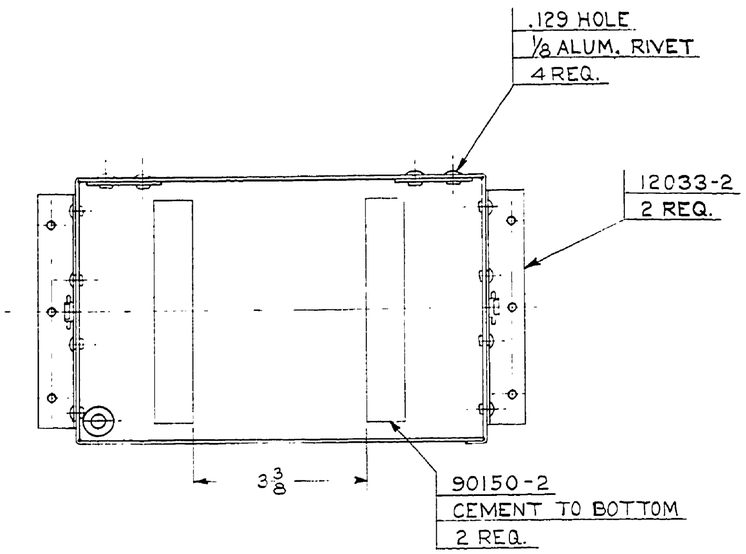

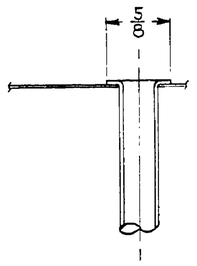

SECTION **A–A**
FULL SIZE

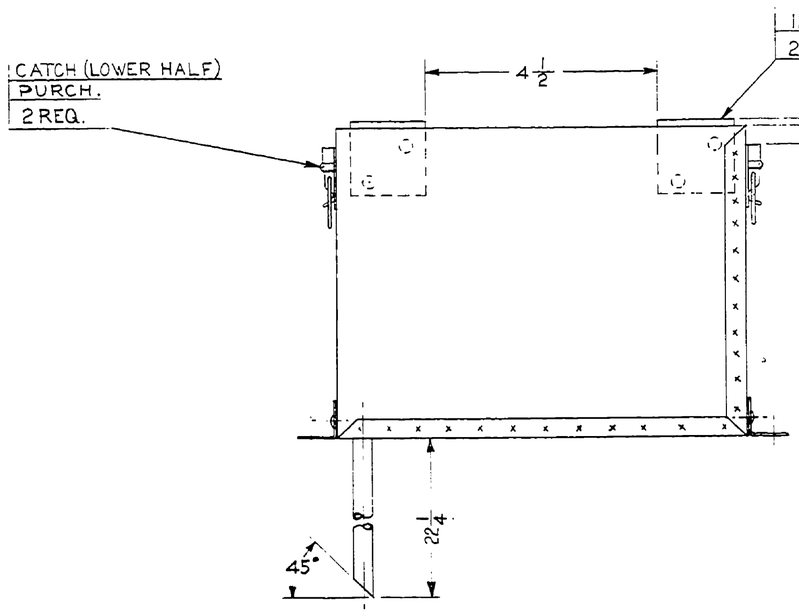

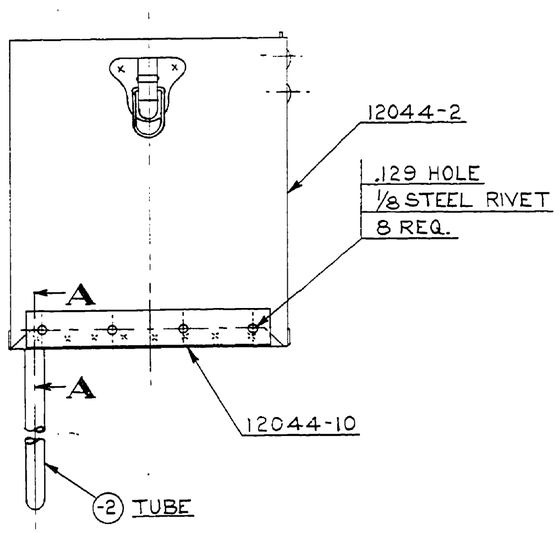

NOTE:
1. INSIDE OF BOX TO BE PAINTED WITH ACID RESISTANT PAINT.
2. SOLDER ALL SEAMS.

PART No.	NO. REQ.	SIZE	DESCRIPTION / MATERIAL
	2		LOWER HALF OF CATCH #1809 P PURCH. CORBIN CABINET LOCK CO.
	4	⅛ × ¼ L.	2S ALUM. BR. HD. RIVET
	8	⅛ × ¼ L.	STEEL RD. HD. RIVET
90150-2	2		FIBER STRIP
12044-10	1		BOTTOM
12044-4	2		PLATE
12044-2	1		BOX
12033-2	2		ANGLE
-2	1	3/8 × .032 × 22 3/8	COPPER TUBE

SCALE 6 IN. = 1 FT. & NOTED — TOTAL WT.–LBS.
FINISH–PIPER SPECIFICATION #10
MANUFACTURING PRACTICES–PIPER SPECIFICATION #9

THIS DRAWING IS THE PROPERTY OF THE PIPER AIRCRAFT CORP. AND ITS POSSESSION BY UNAUTHORIZED PERSONS SHALL NOT BE CONSTRUED AS PERMISSION TO REPRODUCE FOR SALE, IN WHOLE OR IN PART, ANY DEVICES SHOWN THEREON

LET.	REVISION	DATE	BY

MODEL	PER PLANE	NEXT ASSEMBLY	SUPERSEDES	SUP. BY

PIPER AIRCRAFT CORP.
LOCK HAVEN, PENNA.

BOX ASSEMBLY–BATTERY

DRAFTSMAN	CHECKER	STANDARDS
H. R. K. 1-9-51	C. E. K. 1-10-51	

13182

776

A778

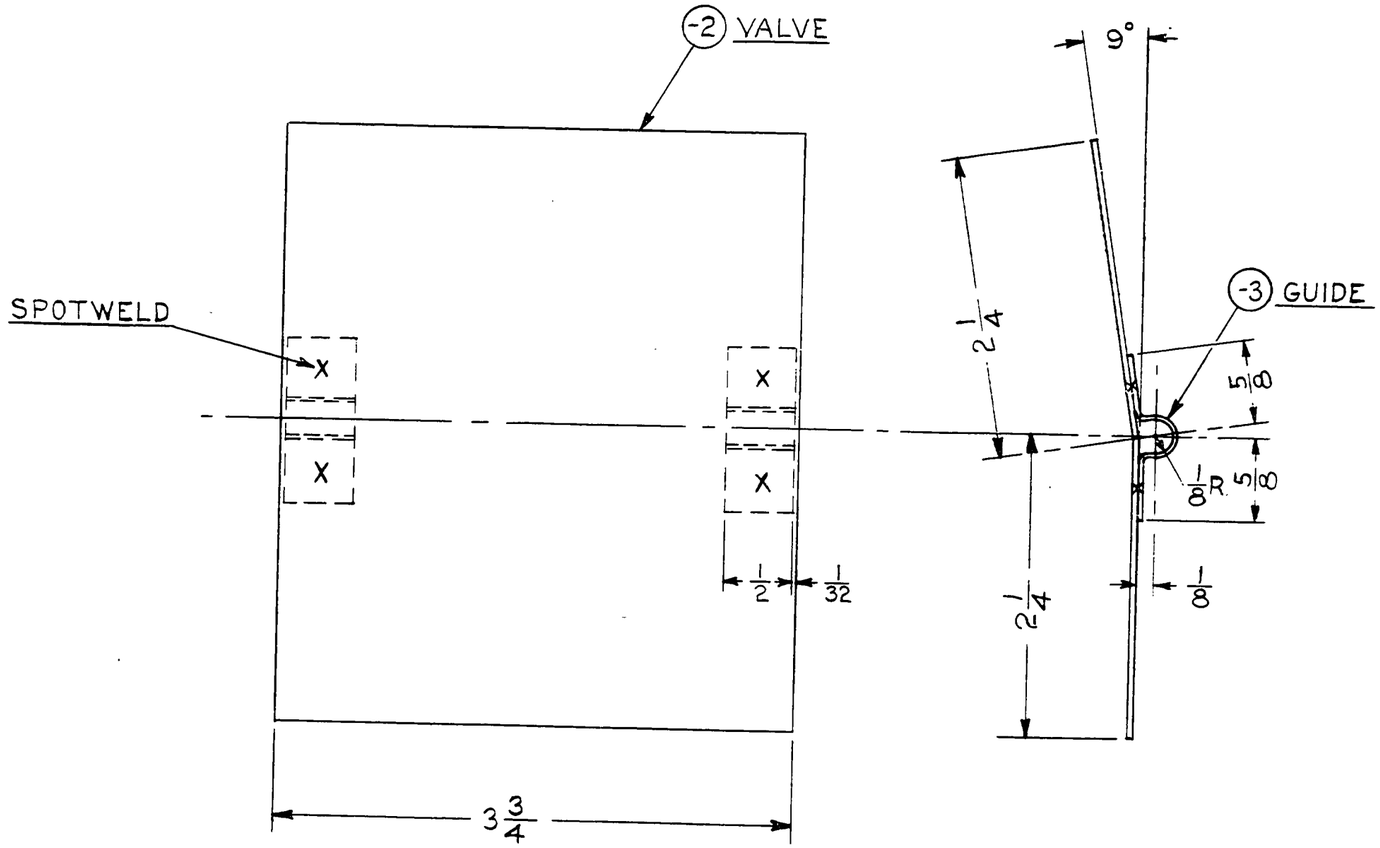

PART No.	NO. REQ.	SIZE	MATERIAL DESCRIPTION
-3	2	.020 × 1/2 × 1 11/16	H. R. STEEL
-2	1	.032 × 3 3/4 × 4 1/2	#1025 STEEL

SCALE FULL SIZE | TOTAL WT.—LBS.

FINISH—PIPER SPECIFICATION #10

MANUFACTURING PRACTICES—PIPER SPECIFICATION #9

VALVE ASSEMBLY — CARBURETOR AIR BOX

THIS DRAWING IS THE PROPERTY OF THE PIPER AIRCRAFT CORP. AND ITS POSSESSION BY UNAUTHORIZED PERSONS SHALL NOT BE CONSTRUED AS PERMISSION TO REPRODUCE FOR SALE, IN WHOLE OR IN PART, ANY DEVICES SHOWN THEREON

LET.	REVISION	DATE	BY

MODEL	PER PLANE	NEXT ASSEMBLY	SUPERSEDES	SUP BY

PIPER AIRCRAFT CORP.
LOCK HAVEN, PENNA.

DRAFTSMAN	CHECKER	STANDARDS
H. R. K. 1-26-51	C. E. K. 2-2-51	

13204

571

A 571

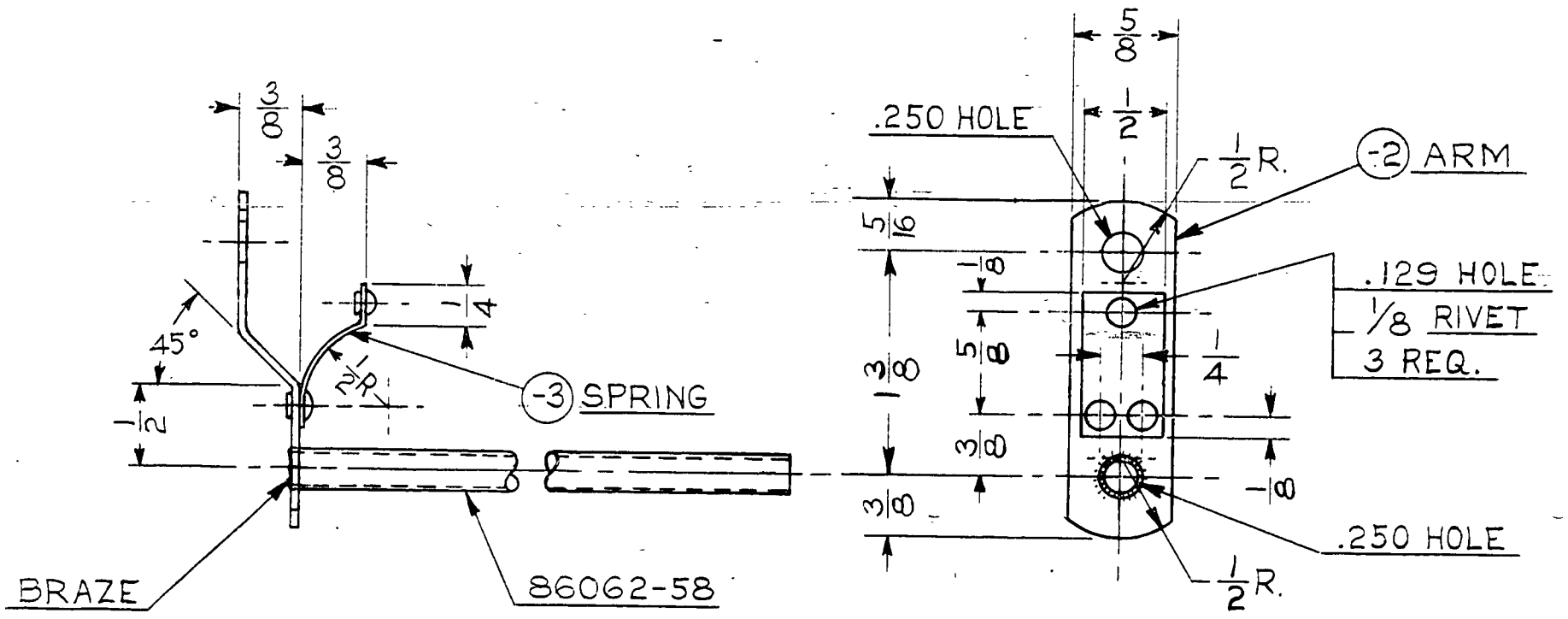

PART No.	No. REQ.	SIZE	MATERIAL
86062-58	1	TUBE	
	3	1/8 x 1/4	STL. RD. HD. RIVET
-3	1	.022 x 1/2 x 1 3/16	SPRING STEEL
-2	1	.045 x 5/8 x 2 1/4	#1025 STEEL

SCALE FULL SIZE — TOTAL WT.–LBS.

FINISH–PIPER SPECIFICATION #10

MANUFACTURING PRACTICES–PIPER SPECIFICATION #9

LET.	REVISION	DATE	BY

MODEL	PER PLANE	NEXT ASSEMBLY	SUPERSEDES	SUP. BY

THIS DRAWING IS THE PROPERTY OF THE PIPER AIRCRAFT CORP. AND ITS POSSESSION BY UNAUTHORIZED PERSONS SHALL NOT BE CONSTRUED AS PERMISSION TO REPRODUCE FOR SALE, IN WHOLE OR IN PART, ANY DEVICES SHOWN THEREON.

PIPER AIRCRAFT CORP.
LOCK HAVEN, PENNA.

ARM ASSEMBLY– AIR BOX CONTROL

DRAFTSMAN	CHECKER	STANDARDS
H. R. K. 1-26-51	C. E. K. 2-2-51	

13205

160

A160

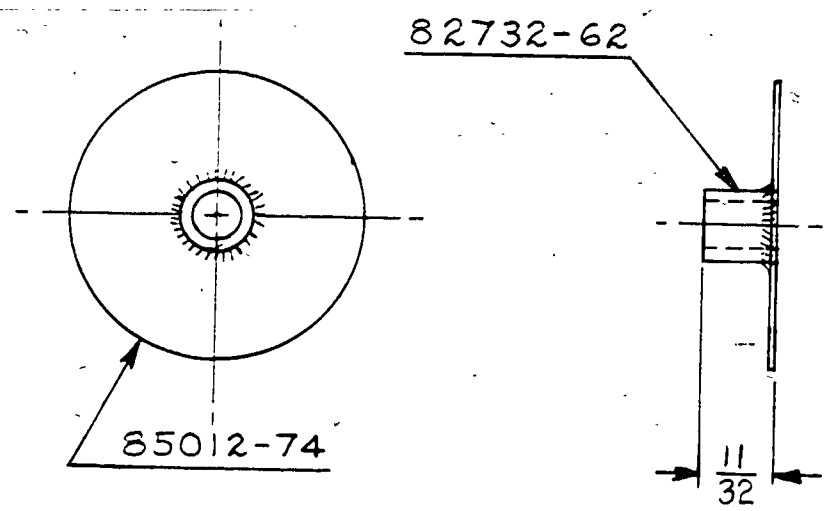

PART No.	No. REQ.	NAME / MATERIAL
85012-74	1	WASHER
82732-62	1	BUSHING

SCALE FULL SIZE | TOTAL WT.—LBS.

FINISH—PIPER SPECIFICATION #10

MANUFACTURING PRACTICES—PIPER SPECIFICATION #9

BUSHING ASSEMBLY—AIR BOX

LET.	REVISION	DATE	BY

MODEL	PER PLANE	NEXT ASSEMBLY	SUPERSEDES	SUP. BY

THIS DRAWING IS THE PROPERTY OF THE PIPER AIRCRAFT CORP. AND ITS POSSESSION BY UNAUTHORIZED PERSONS SHALL NOT BE CONSTRUED AS PERMISSION TO REPRODUCE FOR SALE, IN WHOLE OR IN PART. ANY DEVICES SHOWN THEREON.

PIPER AIRCRAFT CORP.
LOCK HAVEN, PENNA.

DRAFTSMAN	CHECKER	STANDARDS
C. E. K. 1-23-51	H. R. K. 2-2-51	

13206

161

A161

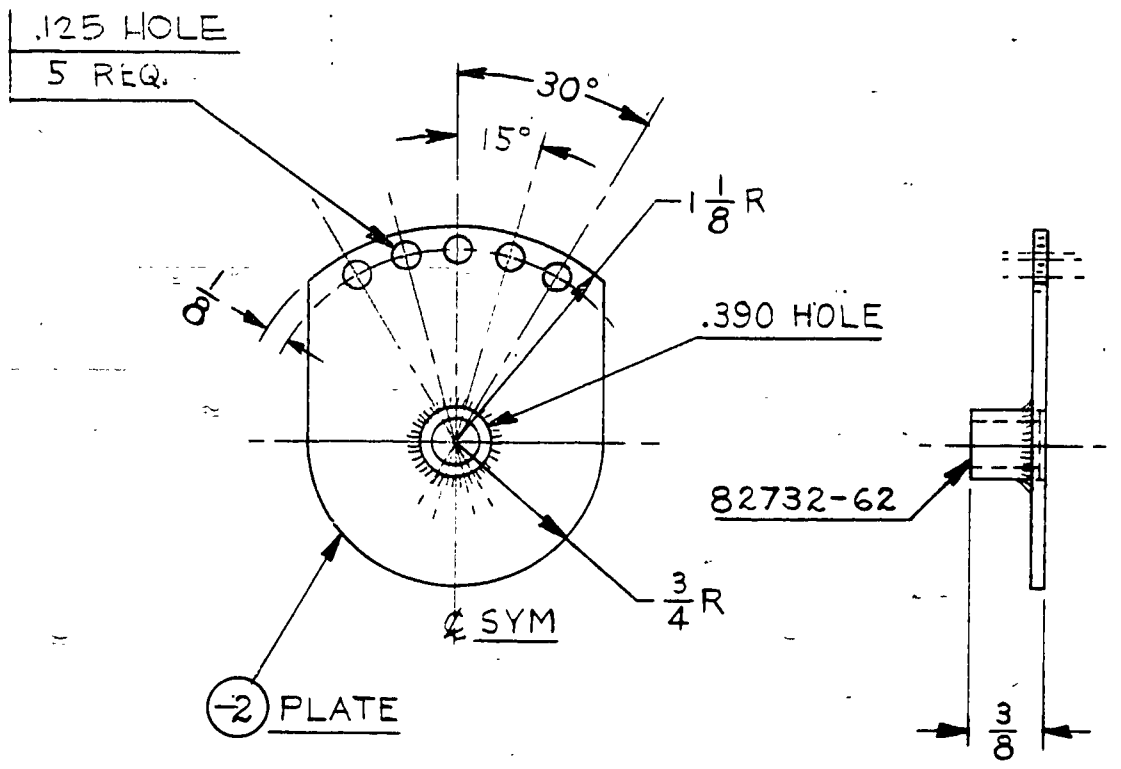

82732-62	1	BUSHING	
-2	1	.062 x 1½ x 1⅞	#1025 STL.
PART No.	No. REQ.	SIZE	DESCRIPTION
		MATERIAL	

SCALE FULL SIZE — TOTAL WT.—LBS.

FINISH—PIPER SPECIFICATION #10

MANUFACTURING PRACTICES—PIPER SPECIFICATION #9

PLATE ASSEMBLY— AIR BOX RATCHET

LET.	REVISION	DATE	BY

MODEL	PER PLANE	NEXT ASSEMBLY	SUPERSEDES	SUP. BY

THIS DRAWING IS THE PROPERTY OF THE PIPER AIRCRAFT CORP. AND ITS POSSESSION BY UNAUTHORIZED PERSONS SHALL NOT BE CONSTRUED AS PERMISSION TO REPRODUCE FOR SALE, IN WHOLE OR IN PART, ANY DEVICES SHOWN THEREON.

PIPER AIRCRAFT CORP.
LOCK HAVEN, PENNA.

DRAFTSMAN	CHECKER	STANDARDS
C. E. K. 1-23-51	H. R. K. 2-2-51	

13207

162

A 162

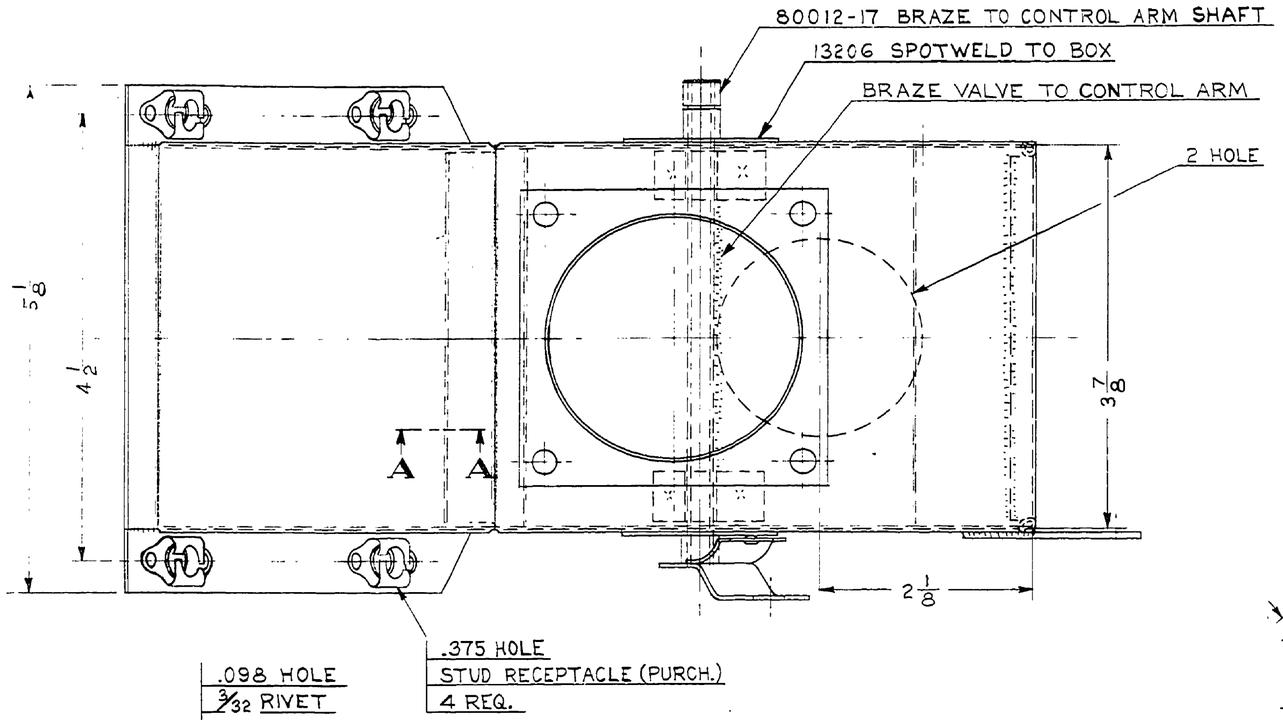

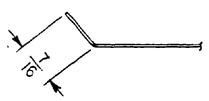

SECTION A-A

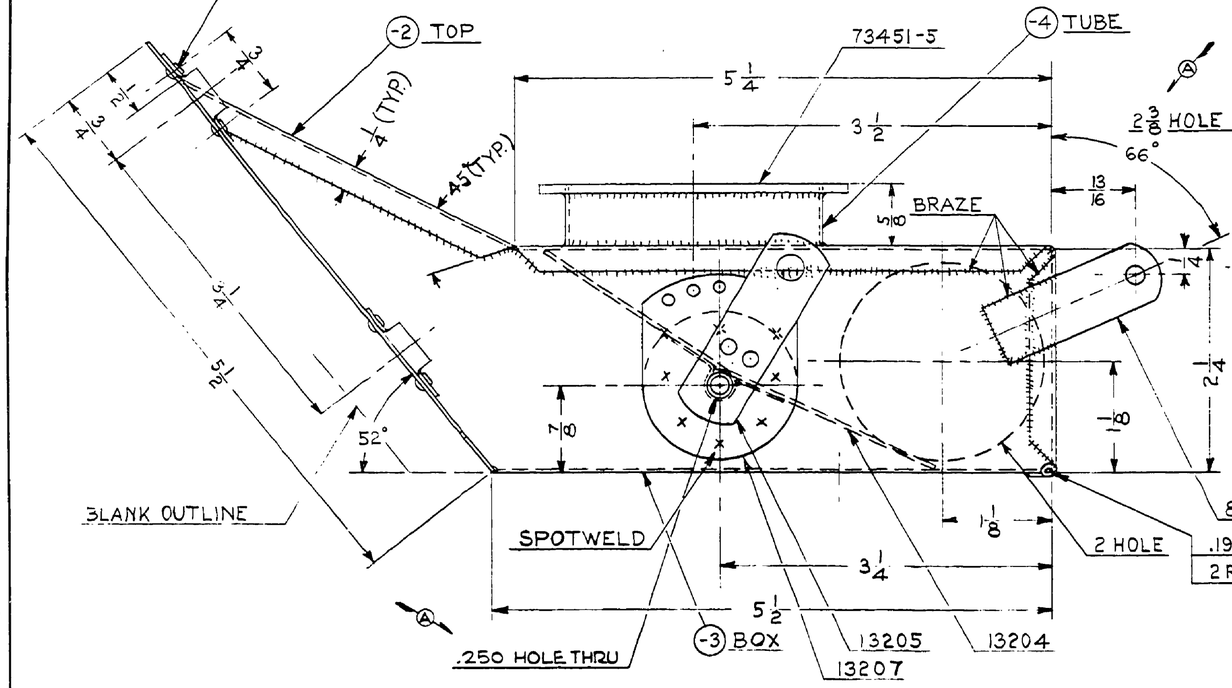

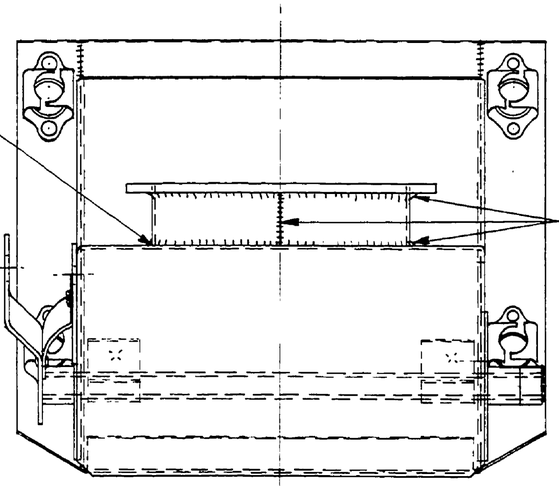

	8	3/32 x 9/64	STL. TUBULAR RIVET
	4	STUD RECEPTACLE #99871-P.098 PURCH. UNITED-CARR FASTENER CORP.	
81172-61	1	LUG	
80012-17	1	BUSH.	
73451-5	1	PLATE	
13207	1	PLATE ASSY.	
13206	1	BUSH. ASSY.	
13205	1	CONTROL ARM ASSY.	
13204	1	VALVE ASSY.	
-4	1	.032 x 5/8 x 7 7/8	#1025 STEEL
-3	1	.020 x 9 3/8 x 12 5/8	H.R. STEEL
-2	1	.032 x 4 3/8 x 12	#1025 STEEL
PART NO.	NO. REQ.	SIZE	DESCRIPTION
		MATERIAL	

THIS DRAWING IS THE PROPERTY OF THE PIPER AIRCRAFT CORP. AND ITS POSSESSION BY UNAUTHORIZED PERSONS SHALL NOT BE CONSTRUED AS PERMISSION TO REPRODUCE FOR SALE, IN WHOLE OR IN PART. ANY DEVICES SHOWN THEREON

SCALE FULL SIZE — TOTAL WT.—LBS.

FINISH—PIPER SPECIFICATION #10

MANUFACTURING PRACTICES—PIPER SPECIFICATION #9

MODEL	PER PLANE	NEXT ASSEMBLY	SUPERSEDES	SUP. BY

LET.	REVISION	DATE	BY
A	2 3/8 WAS 2 7/16 ℄ .250 HOLE ADDED	4-2-51	M.G.

PIPER AIRCRAFT CORP.
LOCK HAVEN, PENNA.

BOX ASSEMBLY — CARBURETOR AIR

DRAFTSMAN	CHECKER	STANDARDS
H.R.K. 1-30-51	C.E.K. 2-2-51	

13208

779

A779

WAS 8019 / D8013-A

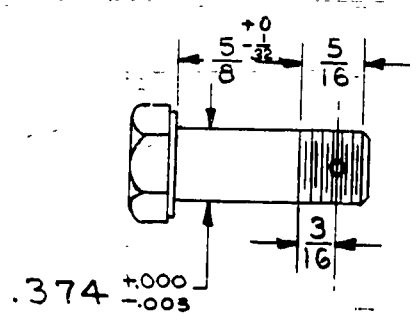

NOTE: ANG IN ALL OTHER RESPECTS

				MODEL	PER PLANE	NEXT ASSEMBLY	SUPERSEDES	SUP. BY
				J5C	4	10127		
				J3	4			

PART NO.	NO. REQ.	MATERIAL
SCALE FULL SIZE		TOTAL WT.—LBS.
FINISH—PIPER SPECIFICATION # 10		
MANUFACTURING PRACTICES—PIPER SPECIFICATION # 9		

BOLT—LIFT STRUT FORK

LET	REVISION	DATE	BY
B	REDRAWN WITHOUT CHANGE	6-12-51	I.M.M
A	J5C MODEL REF. ADDED	2-12-46	C.E.K

THIS DRAWING IS THE PROPERTY OF THE PIPER AIRCRAFT CORP. AND ITS POSSESSION BY UNAUTHORIZED PERSONS SHALL NOT BE CONSTRUED AS PERMISSION TO REPRODUCE FOR SALE IN WHOLE OR IN PART ANY DEVICES SHOWN THEREON.

PIPER AIRCRAFT CORP.
LOCK HAVEN, PENNA.

V. F.	F. B.		13241
12-23-41	12-24-41		
DRAFTSMAN	CHECKER	STANDARDS	

163

A 163

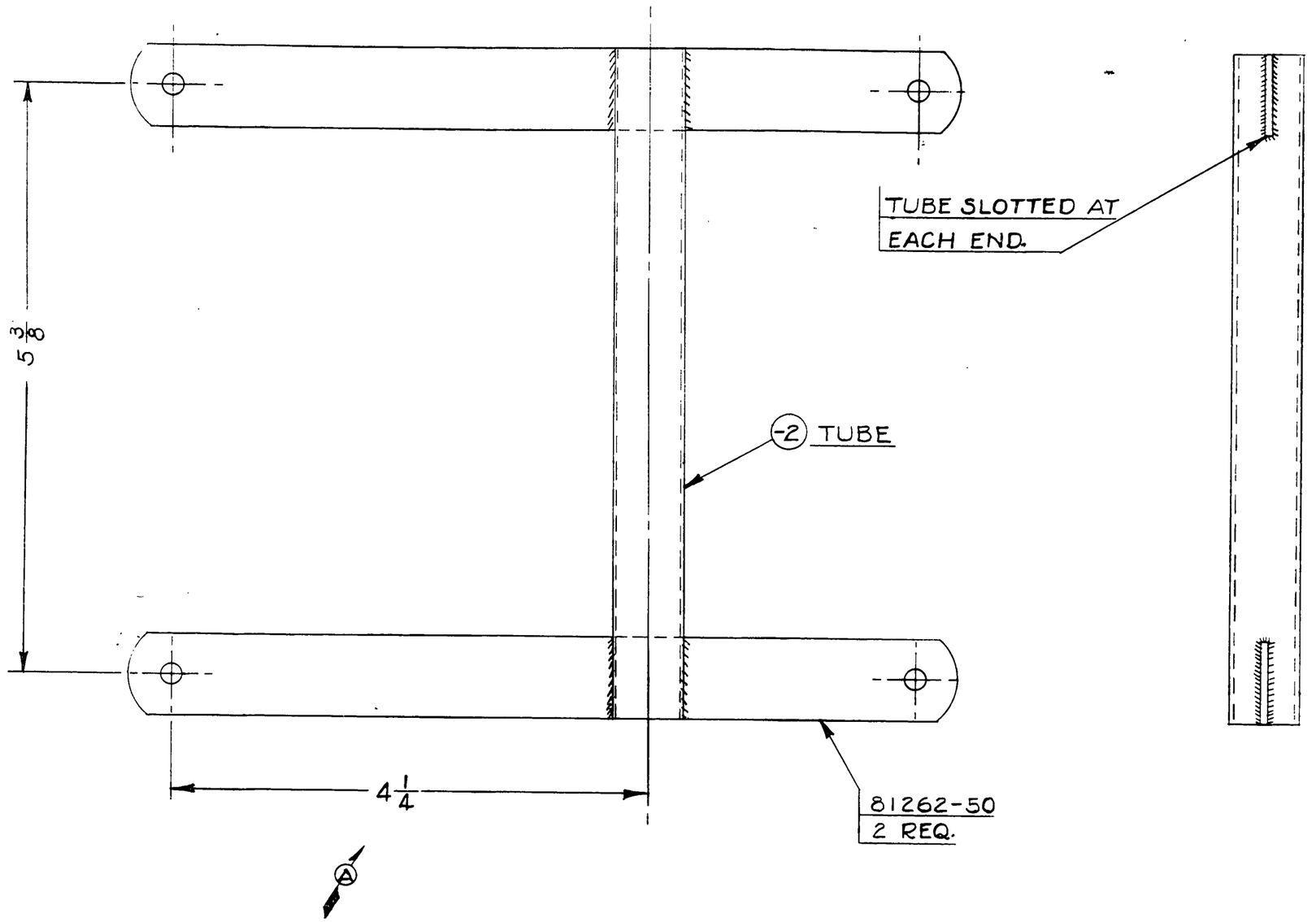

THIS DRAWING IS THE PROPERTY OF THE PIPER AIRCRAFT CORP. AND ITS POSSESSION BY UNAUTHORIZED PERSONS SHALL NOT BE CONSTRUED AS PERMISSION TO REPRODUCE FOR SALE, IN WHOLE OR IN PART, ANY DEVICES SHOWN THEREON

LET.	REVISION	DATE	BY
A	4 1/2 WAS 3 1/4	3-26-51	L.E.M.

MODEL	PER PLANE	NEXT ASSEMBLY	SUPERSEDES	SUP. BY

PIPER AIRCRAFT CORP.
LOCK HAVEN, PENNA.

PART No.	No. REQ.	SIZE	DESCRIPTION
81262-50	2	LINK	
-2	1	5/8 x .035 x 6 1/8	1025 STL. TUBE
		MATERIAL	

SCALE FULL SIZE — TOTAL WT.–LBS.

FINISH–PIPER SPECIFICATION #10

MANUFACTURING PRACTICES–PIPER SPECIFICATION #9

BRACKET ASS'Y. – SHOULDER HARNESS ATTACHMENT

DRAFTSMAN	CHECKER	STANDARDS
I. E. M. 3-8-51	H. R. K. 3-12-51	

13300

572

A572

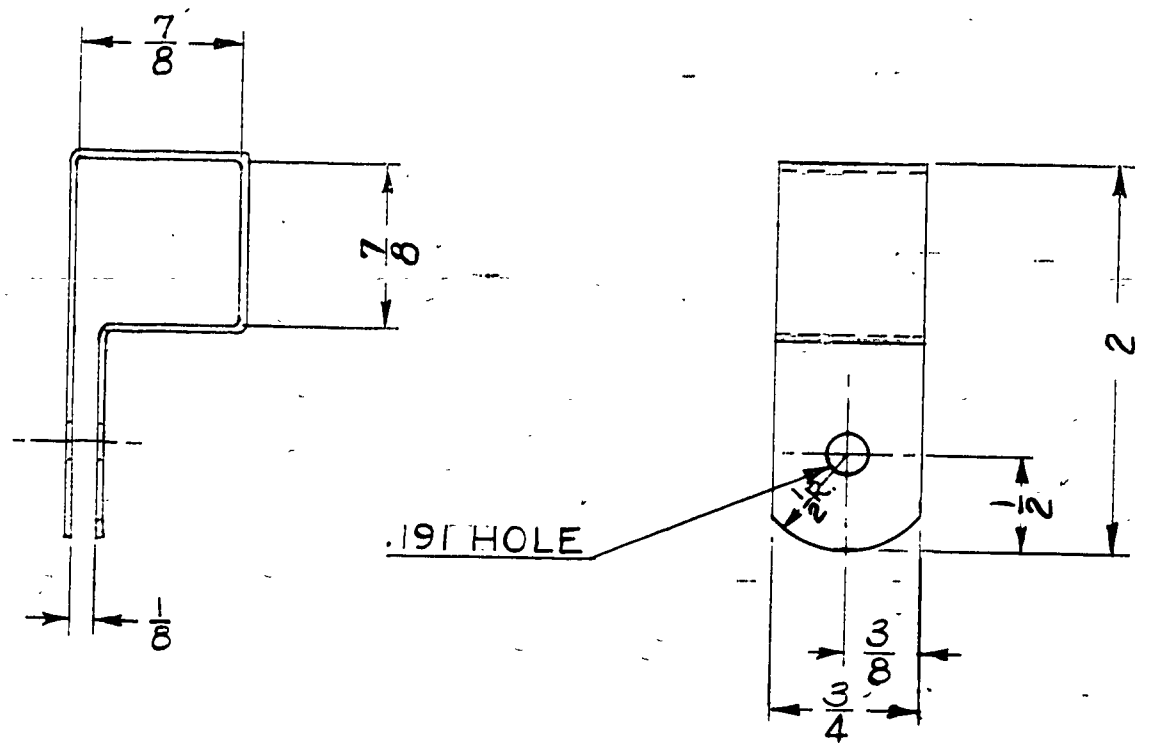

LET.	REVISION	DATE	BY

MODEL	PER PLANE	NEXT ASSEMBLY	SUPERSEDES	SUP. BY

THIS DRAWING IS THE PROPERTY OF THE PIPER AIRCRAFT CORP. AND ITS POSSESSION BY UNAUTHORIZED PERSONS SHALL NOT BE CONSTRUED AS PERMISSION TO REPRODUCE FOR SALE, IN WHOLE OR IN PART, ANY DEVICES SHOWN THEREON.

PIPER AIRCRAFT CORP.
LOCK HAVEN, PENNA.

PART NO.	No. REQ.	SIZE	MATERIAL
		.045×3/4×5 7/8	#1025 STEEL

SCALE FULL SIZE | TOTAL WT.—LBS.

FINISH—PIPER SPECIFICATION #10

MANUFACTURING PRACTICES—PIPER SPECIFICATION #9

CLAMP—SQUARE OFFSET

DRAFTSMAN	CHECKER	STANDARDS
I. E. M. 3-8-51	H. R. K. 3-12-51	

13305

164

A164

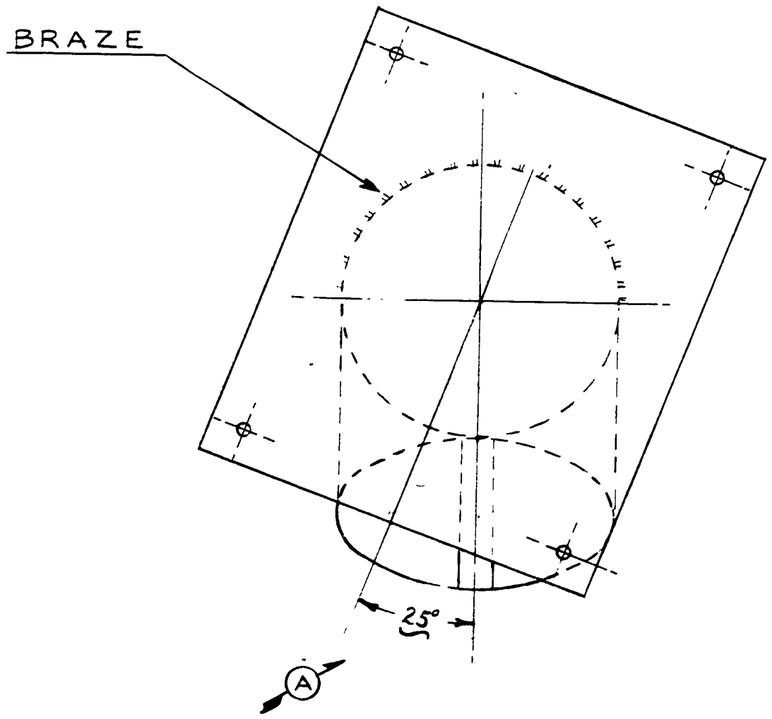

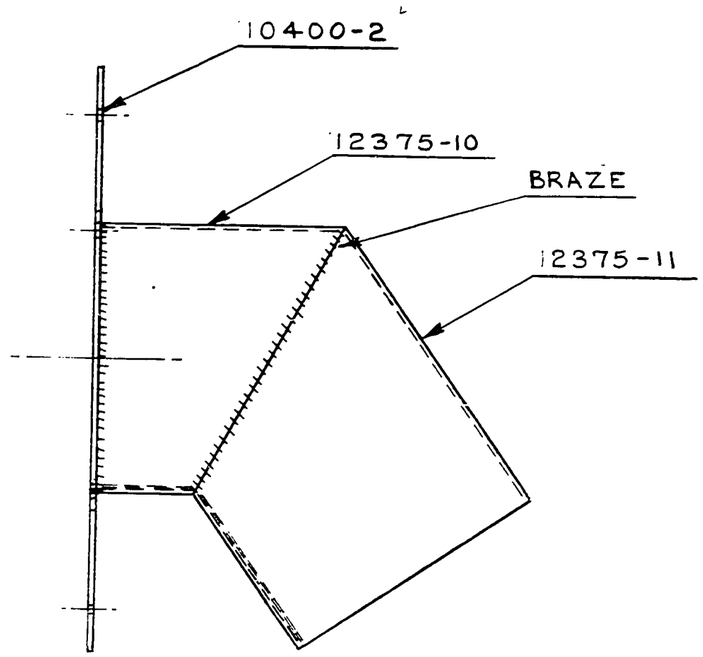

12375-11	1	TUBE	
12375-10	1	TUBE	
10400-2	1	PLATE	
PART No.	No. REQ.	NAME / MATERIAL	

SCALE FULL SIZE — TOTAL WT.—LBS.

FINISH—PIPER SPECIFICATION #10

MANUFACTURING PRACTICES—PIPER SPECIFICATION #9

TAKE-OFF ASSEMBLY—AIR

THIS DRAWING IS THE PROPERTY OF THE PIPER AIRCRAFT CORP. AND ITS POSSESSION BY UNAUTHORIZED PERSONS SHALL NOT BE CONSTRUED AS PERMISSION TO REPRODUCE FOR SALE, IN WHOLE OR IN PART, ANY DEVICES SHOWN THEREON

MODEL	PER PLANE	NEXT ASSEMBLY	SUPERSEDES	SUP. BY

LET.	REVISION	DATE	BY
A	25° WAS 20°	6-28-51	C.B.

PIPER AIRCRAFT CORP.
LOCK HAVEN, PENNA.

DRAFTSMAN	CHECKER	STANDARDS
I.M.M. 3-22-51	H.R.K. 3-26-51	

13332

573

A 573

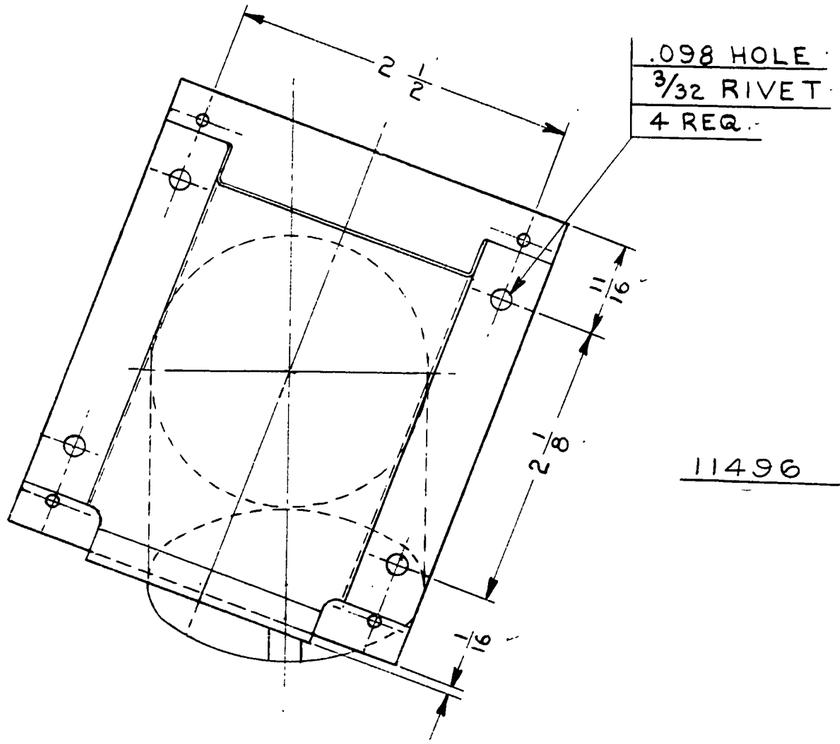

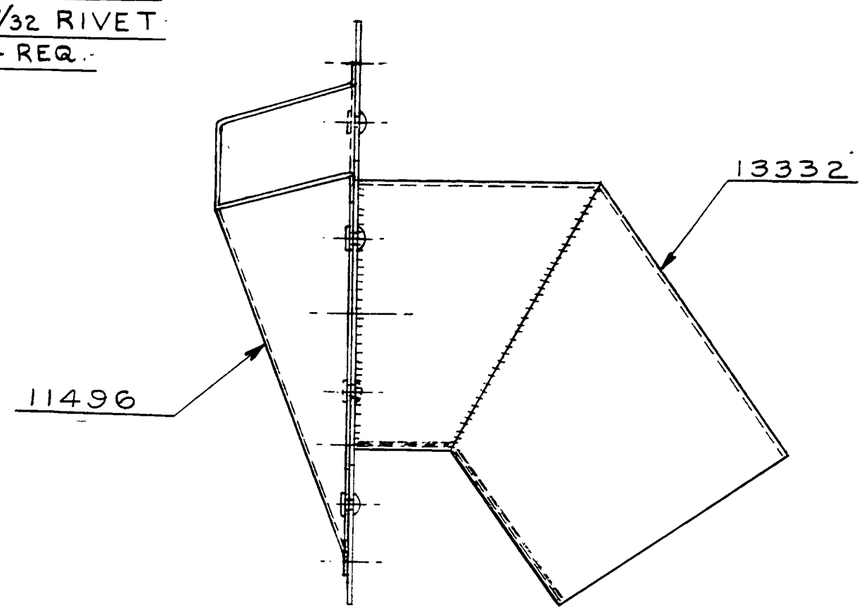

13332	1	TAKE-OFF ASSEMBLY		
11496	1	SCOOP		
	4	3/32 x 9/64 L.	STEEL TUBULAR RIVET	
PART No.	No. REQ.	SIZE	DESCRIPTION	MATERIAL

SCALE FULL SIZE — TOTAL WT.—LBS.

FINISH—PIPER SPECIFICATION #10

MANUFACTURING PRACTICES—PIPER SPECIFICATION #9

SCOOP ASSEMBLY—AIR

THIS DRAWING IS THE PROPERTY OF THE PIPER AIRCRAFT CORP. AND ITS POSSESSION BY UNAUTHORIZED PERSONS SHALL NOT BE CONSTRUED AS PERMISSION TO REPRODUCE FOR SALE, IN WHOLE OR IN PART, ANY DEVICES SHOWN THEREON

LET.	REVISION	DATE	BY

MODEL	PER PLANE	NEXT ASSEMBLY	SUPERSEDES	SUP. BY
PA				

PIPER AIRCRAFT CORP.
LOCK HAVEN, PENNA.

I. M. M.	H. R. K.		
3-23-51	3-26-51		
DRAFTSMAN	CHECKER	STANDARDS	

13334

574

A574

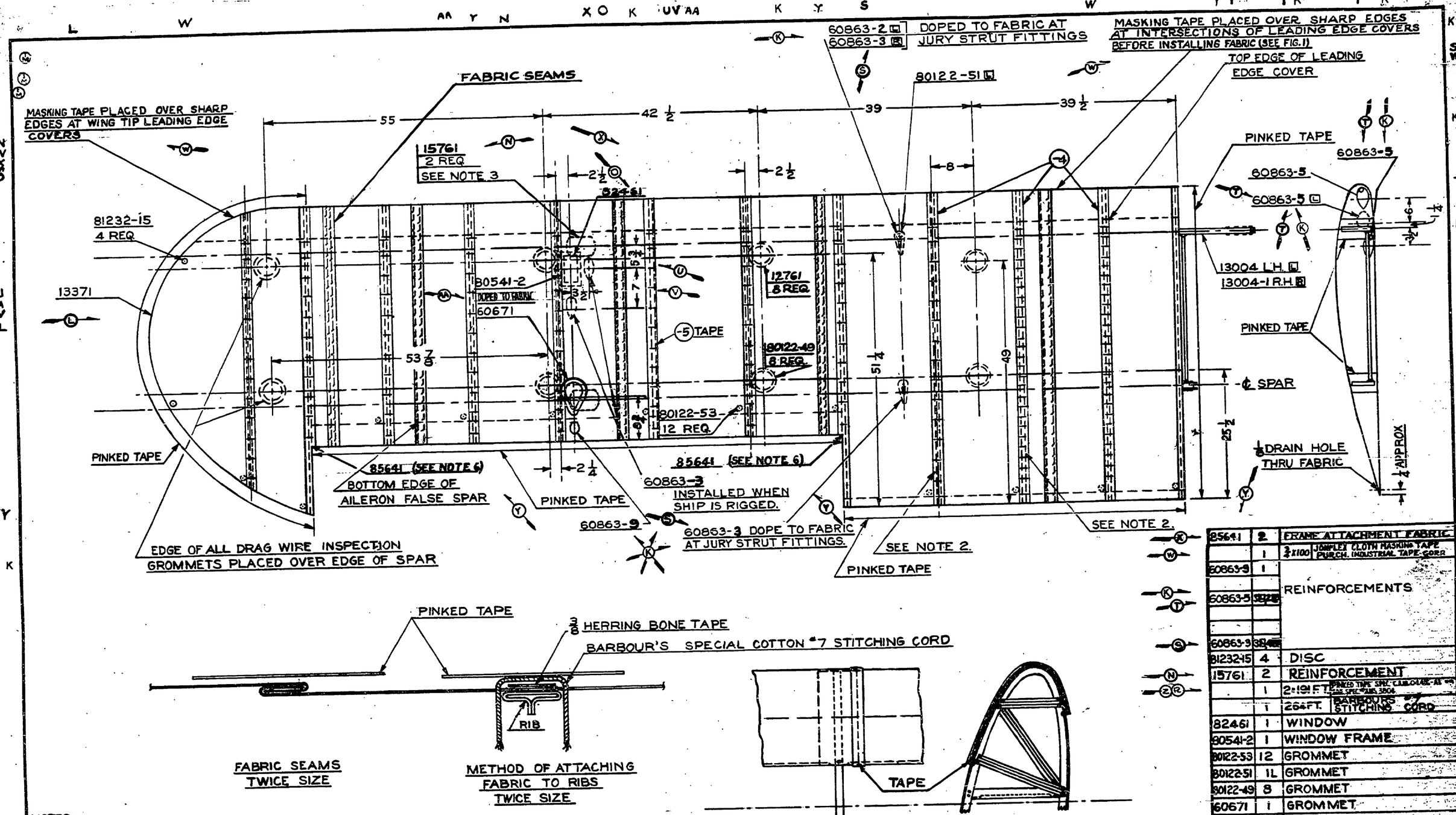

FABRIC SEAMS
TWICE SIZE

METHOD OF ATTACHING FABRIC TO RIBS
TWICE SIZE

FIG 1.
3 = 1 FT.

NOTES:

1. PART MARKED [L] USED ON LEFT ASSY ONLY.
   PART MARKED [R] USED ON RIGHT ASSY ONLY.
2. 2 IN. RIB STITCH SPACING ON #2 & #3 RIBS.
   3 IN. SPACING ON ALL OTHER RIBS.
3. 15761 DOPED TO FABRIC AROUND LIFT STRUT FITTINGS.
4. PARTS MARKED THUS △ ALSO ON 16243 (MODEL J3)
5. ALL GROMMETS AND REINFORCEMENTS ARE APPLIED TO OUTSIDE OF FABRIC.
6. DOPE 85641 OVER OPENING IN FABRIC AT END OF FALSE SPAR.

13363 L.H. - SHOWN
13363-1 R.H. - OPPOSITE EXCEPT AS NOTED

85641	2		FRAME ATTACHMENT FABRIC	
	1	3/4 X 100	JOHNLEE CLOTH MASKING TAPE PURCH. INDUSTRIAL TAPE CORP.	
60863-9	1			
			REINFORCEMENTS	
60863-5	32			
60863-3	38			
81232-15	4		DISC	
15761	2		REINFORCEMENT	
	1	2=19 FT.	PINKED TAPE SPEC. CAB.0148-48 AMS SPEC. AMS 3804	
	1	264 FT.	BARBOURS #7 STITCHING CORD	
82461	1		WINDOW	
80541-2	1		WINDOW FRAME	
80122-53	12		GROMMET	
80122-51	1L		GROMMET	
80122-49	8		GROMMET	
60671	1		GROMMET	
60863-2	1 [L]		REINFORCEMENT	
13371	1		FABRIC ASSEMBLY	
13004-1	1		WING PANEL ASSEMBLY	
13004				
12761	8		INSPECTION COVER	
-5	8	3/8 x 93	COTTON HERRING	
-4	3	3/8 x 106	BONE TAPE	
PART No.	No. REQ.	SIZE	DESCRIPTION	

MATERIAL

AA	10F 85641 REIN. NOTE ADDED	8-9-44	L.R.
Z	ALTERNATE SPEC. ADDED	3-26-45	L.R.
Y	20F 85641 & NOTE 6 ADDED	5-5-45	L.R.
X	85641 ADDED	4-20-45	L.R.
LET.	REVISION	DATE	BY

W	FIG. 1 NOTES (MASKING TAPE) WAS 5	5-5-44	J.B.M.
V	7 WAS 8	1-25-44	A.I.N.
U	[illegible] REV.	1-21-44	A.I.N.
T	60863-5 WAS 60863-6 / 60863-7 WAS 60863-8	1-7-44	R.E.T.
S	[illegible] ADDED	12-24-43	R.E.T.
R	PINKED TAPE SPEC. ADDED	12-15-43	L.R.M.
Q	[illegible]	11-9-43	P.J.D.
P	NOTE 4 ADDED	11-9-43	R.E.T.
O	[illegible]	11-9-43	L.R.M.
N	15761 WAS 14993-8	9-9-43	P.J.D.
M	[illegible] ADDED	9-9-43	R.E.T.
L	VIEW UNTIL REVISED	8-18-43	R.E.T.
K	NEW PART NOS. WERE 60481 THRU 43	7-29-43	C.K.
J	REDRAWN & REVISED	4-29-43	C.K.
LET.	REVISION	DATE	BY

LIMITS-SHOP PRACTICES AND TOOLS, UNLESS OTHERWISE NOTED, IN ACCORDANCE WITH PIPER SPECIFICATIONS 99 AND 618.

MODEL	PER SHIP	NEXT ASSEMBLY	SUPERSEDES	SUPERSEDED BY

PIPER AIRCRAFT CORP.
LOCK HAVEN, PENNA.

PANEL ASSY-COVERED WING

DRAWN	CHECKED	APPROVED
C.K. 4-29-43	L.E.K. 5-7-43	

18363

A780

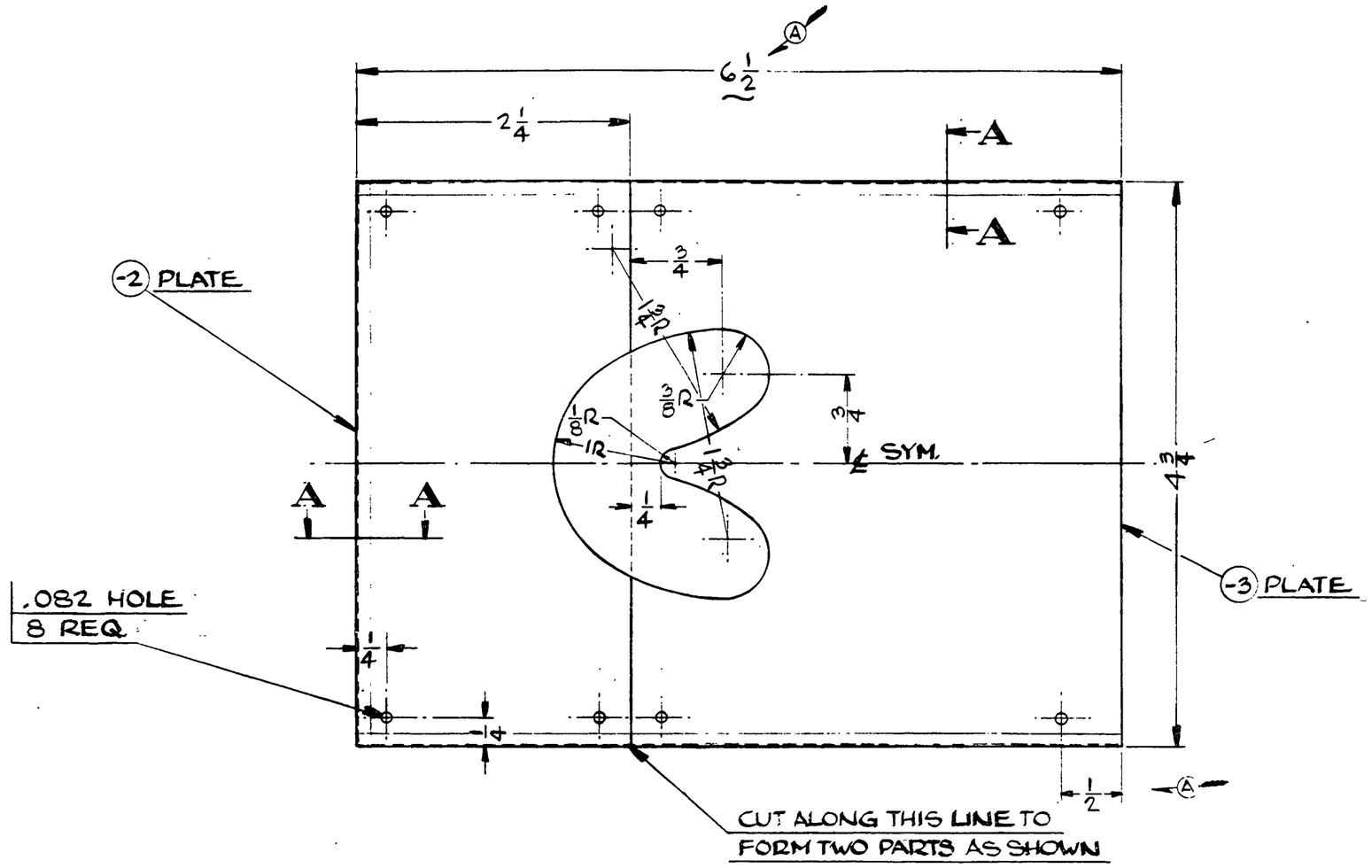

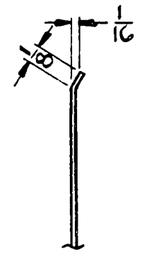

SECTION A-A

THIS DRAWING IS THE PROPERTY OF THE PIPER AIRCRAFT CORP. AND ITS POSSESSION BY UNAUTHORIZED PERSONS SHALL NOT BE CONSTRUED AS PERMISSION TO REPRODUCE FOR SALE, IN WHOLE OR IN PART, ANY DEVICES SHOWN THEREON

LET.	REVISION	DATE	BY
A	6½ WAS 6¼ & ½ WAS ADDED	6-28-51	M.G.

MODEL	PER PLANE	NEXT ASSEMBLY	SUPERSEDES	SUP. BY

PIPER AIRCRAFT CORP.
LOCK HAVEN, PENNA.

PART No.	NO. REQ.	SIZE	DESCRIPTION
		MATERIAL	
-3	—	.032x4¼x4¾	3S ½H ALUM
-2	—	.032x2¼x4¾	3S ½H ALUM

SCALE FULL SIZE | TOTAL WT.—LBS.

FINISH—PIPER SPECIFICATION #10

MANUFACTURING PRACTICES—PIPER SPECIFICATION #9

PLATE—FUSELAGE COWL TRIM

DRAFTSMAN	CHECKER	STANDARDS
M.W.G. 4-20-51	H.R.K. 4-27-51	

13373

575

A575

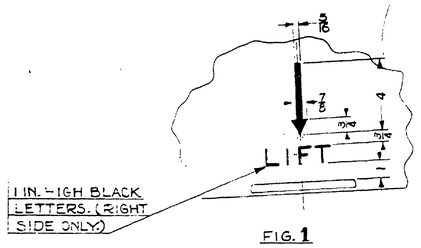

FIG. 1
3 IN. = 1 FT.

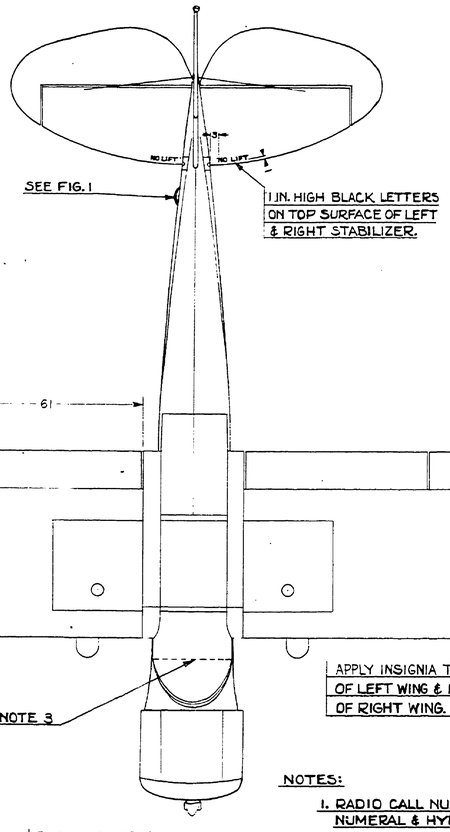

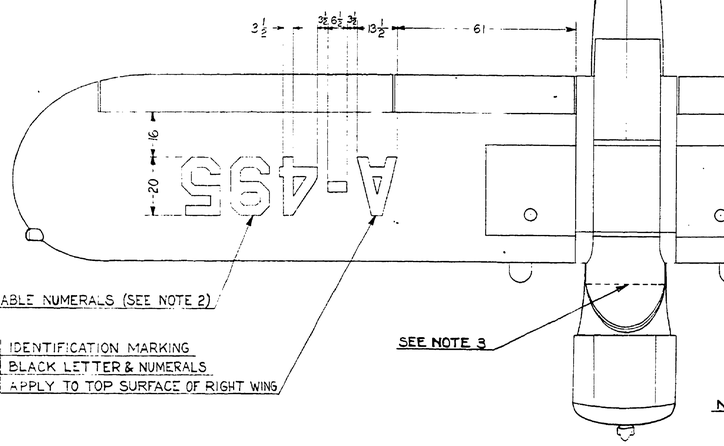

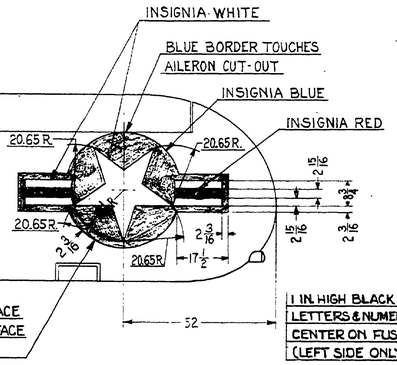

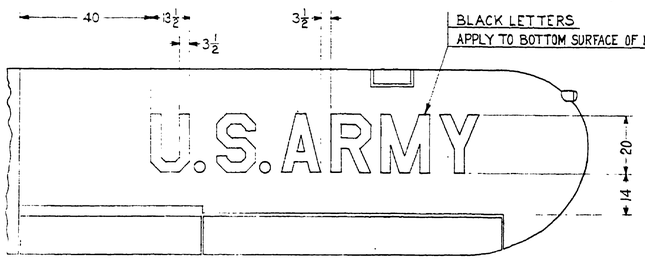

FIG. 2
BOTTOM VIEW OF LEFT WING

NOTES:

1. RADIO CALL NUMBER CONSISTS OF THE SERIAL NUMBER WITH FIRST NUMERAL & HYPHEN OMITTED.
2. IDENTIFICATION MARKING CONSISTS OF THE LETTER "A" AND THE LAST THREE NUMERALS OF THE SERIAL NUMBER WITH THE LETTER SEPARATED FROM THE NUMERALS BY A DASH.
3. FINISH INSTRUMENT PANEL & BRIGHT SCREW HEADS IN DULL BLACK.
4. THE FOLLOWING FABRIC SURFACES SHALL BE MARKED WITH THE CODE PI-CD4-PD3-5-7-51 IN" BLACK 1/2 IN. HIGH LETTERS: ("5-7-51" REPRESENTS DATE OF MFGR. OF PART.)
   WING - UNDER SURFACE AT EDGE OF FALSE SPAR, TOP OF LETTERS FACING AFT, PLACED MIDWAY BETWEEN AILERON & FUSELAGE.
   AILERON - UNDER SURFACE OF TRAILING EDGE, CENTER, TOP OF LETTERS FACING AFT.
   FLAPS - UNDER SURFACE OF TRAILING EDGE, CENTER, TOP OF LETTERS FACING AFT.
   ELEVATORS - UPPER SURFACE OF TRAILING EDGE, TOP OF LETTERS FACING FORWARD.
   HORIZONTAL STABILIZER - UPPER SURFACE OF TRAILING EDGE, TOP OF LETTERS FACING FORWARD.
   RUDDER - RIGHT SIDE ALONG RUDDER POST, TOP OF LETTERS FACING FORWARD.
   FUSELAGE - RIGHT SIDE ALONG LOWER LONGERON BELOW INSIGNIA.
   LANDING GEAR VEES - UPPER SURFACE ALONG FRONT TUBE, TOP OF LETTERS FACING AFT.

LET.	REVISION	DATE	BY
A	IDENTIFICATION MARKING REM. FROM BOTTOM OF LEFT WING & U.S. ARMY ADDED	5-15-51	HRK

MODEL PER PLANE | NEXT ASSEMBLY | SUPERSEDES | SUP. BY

THIS DRAWING IS THE PROPERTY OF THE PIPER AIRCRAFT CORP. AND ITS POSSESSION BY UNAUTHORIZED PERSONS SHALL NOT BE CONSTRUED AS PERMISSION TO REPRODUCE FOR SALE, IN WHOLE OR IN PART. ANY DEVICES SHOWN THEREON.

PIPER AIRCRAFT CORP.
LOCK HAVEN, PENNA.

PART NO. | NO. REQ. | MATERIAL
SCALE 1/2 IN. = 1 FT. & NOTED | TOTAL WT.—LBS.
FINISH—PIPER SPECIFICATION #10
MANUFACTURING PRACTICES—PIPER SPECIFICATION #9

MARKING DETAILS — L-21A AIRPLANE

DRAFTSMAN	CHECKER	STANDARDS
I. E. M. 4-25-51	H. R. K. 4-26-51	

13375

P.D.P. Co. No. 134

A868

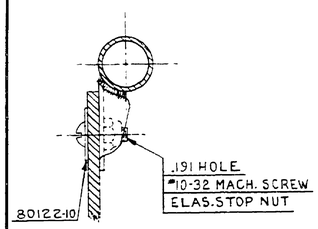

SECTION C–C
FULL SIZE

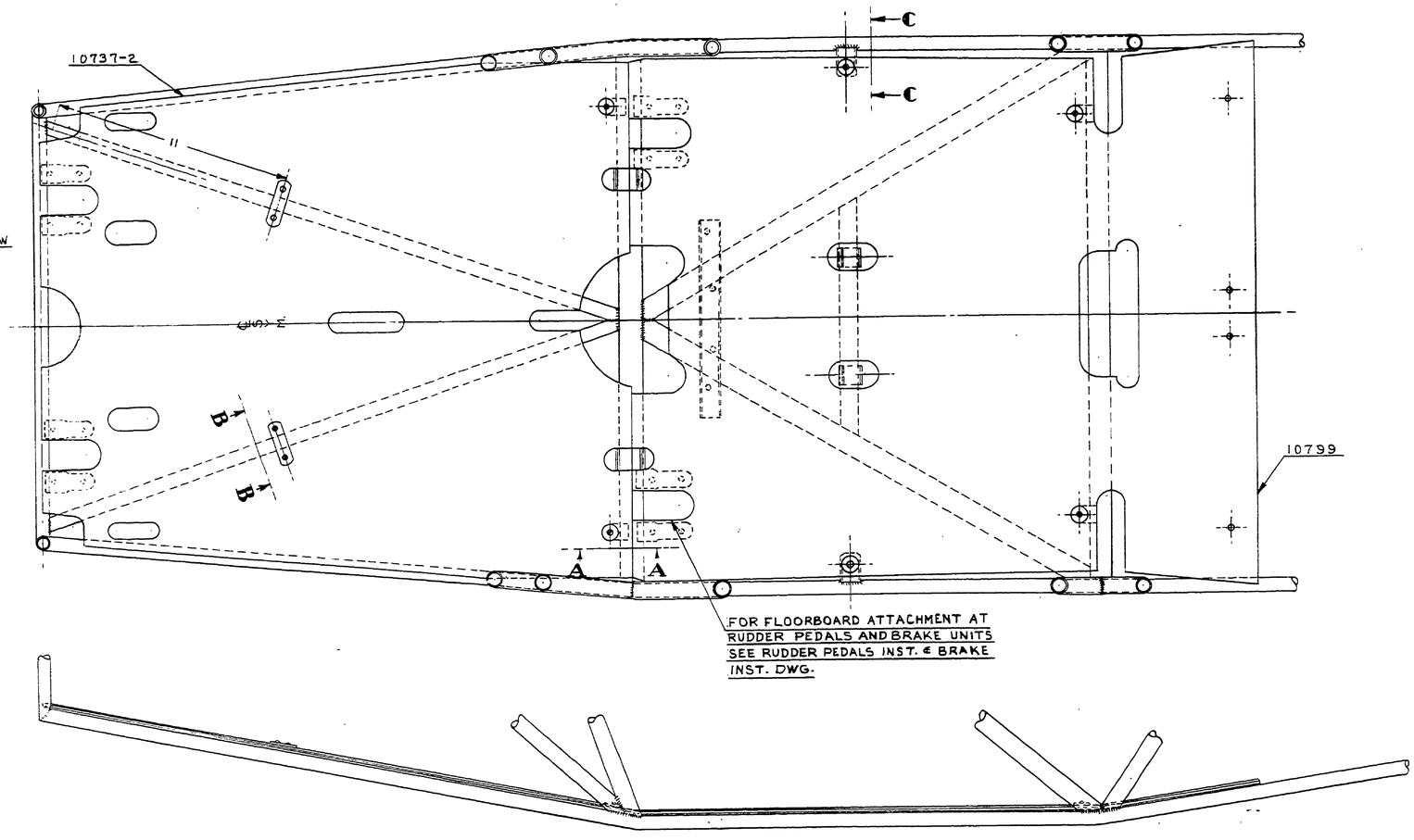

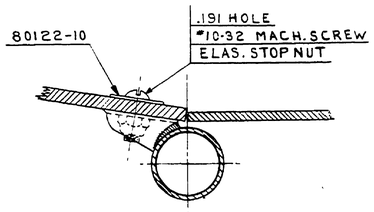

SECTION A–A
FULL SIZE

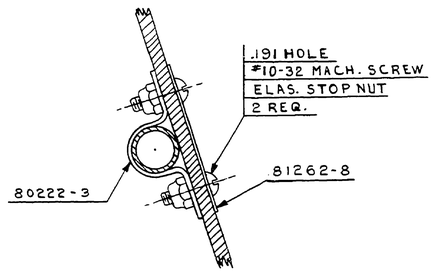

SECTION B–B
FULL SIZE

	10	#22M02	ELASTIC STOP NUT
#10-32	10	5/8L.	RD. HD. MACH. SCREW
81262-8	2		LINK
80222-3	2		CLAMP
80122-10	6		WASHER
10799	1		FLOORBOARD ASSEMBLY
10737-2	1		FLOORBOARD
	No. REQ.	SIZE	DESCRIPTION MATERIAL

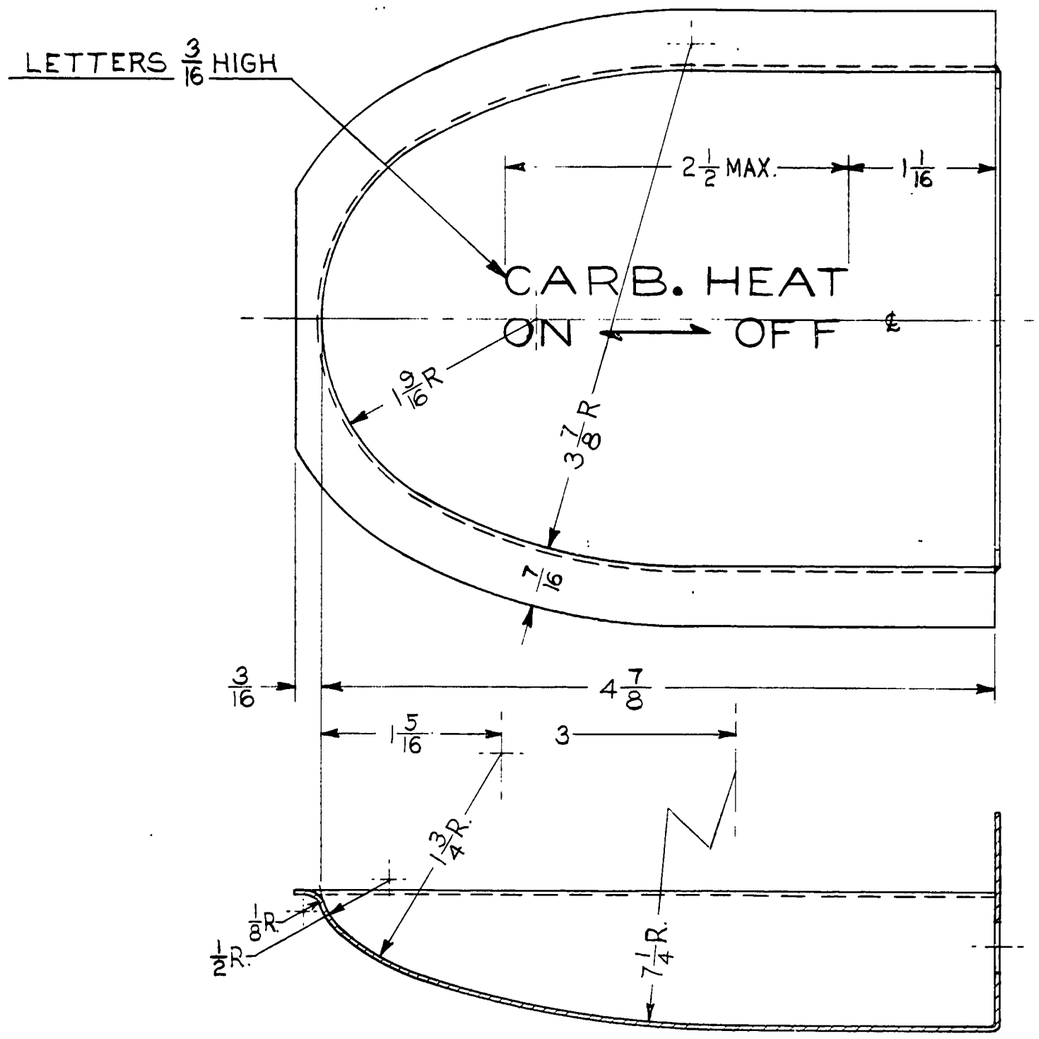

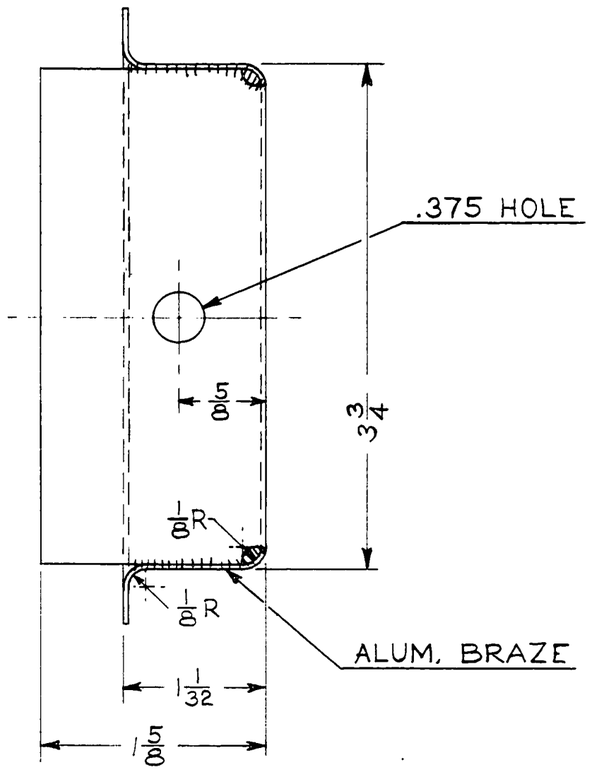

THIS DRAWING IS THE PROPERTY OF THE PIPER AIRCRAFT CORP. AND ITS POSSESSION BY UNAUTHORIZED PERSONS SHALL NOT BE CONSTRUED AS PERMISSION TO REPRODUCE FOR SALE, IN WHOLE OR IN PART, ANY DEVICES SHOWN THEREON

LET.	REVISION	DATE	BY

MODEL	PER PLANE	NEXT ASSEMBLY	SUPERSEDES	SUP. BY
L-21A				

PIPER AIRCRAFT CORP.
LOCK HAVEN, PENNA.

PART No.	No. REQ.	SIZE	DESCRIPTION
		.032×7½×8	3S-0 ALUM.
		MATERIAL	

SCALE FULL SIZE — TOTAL WT.–LBS.

FINISH–PIPER SPECIFICATION #10

MANUFACTURING PRACTICES–PIPER SPECIFICATION #9

BOX – CARBURETOR HEAT CONTROL

DRAFTSMAN	CHECKER	STANDARDS
H. R. K. 5-3-51	C. E. K. 5-18-51	

13382

576

A 576

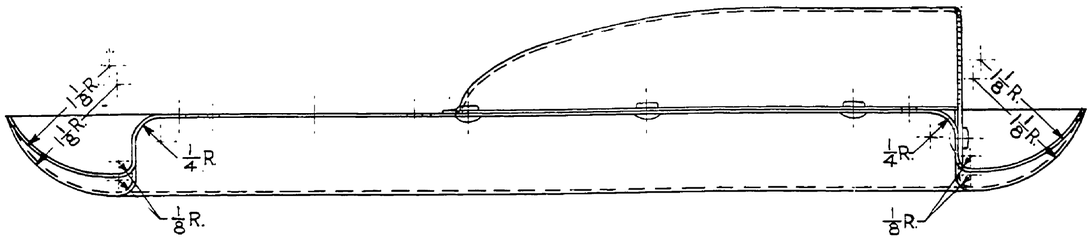

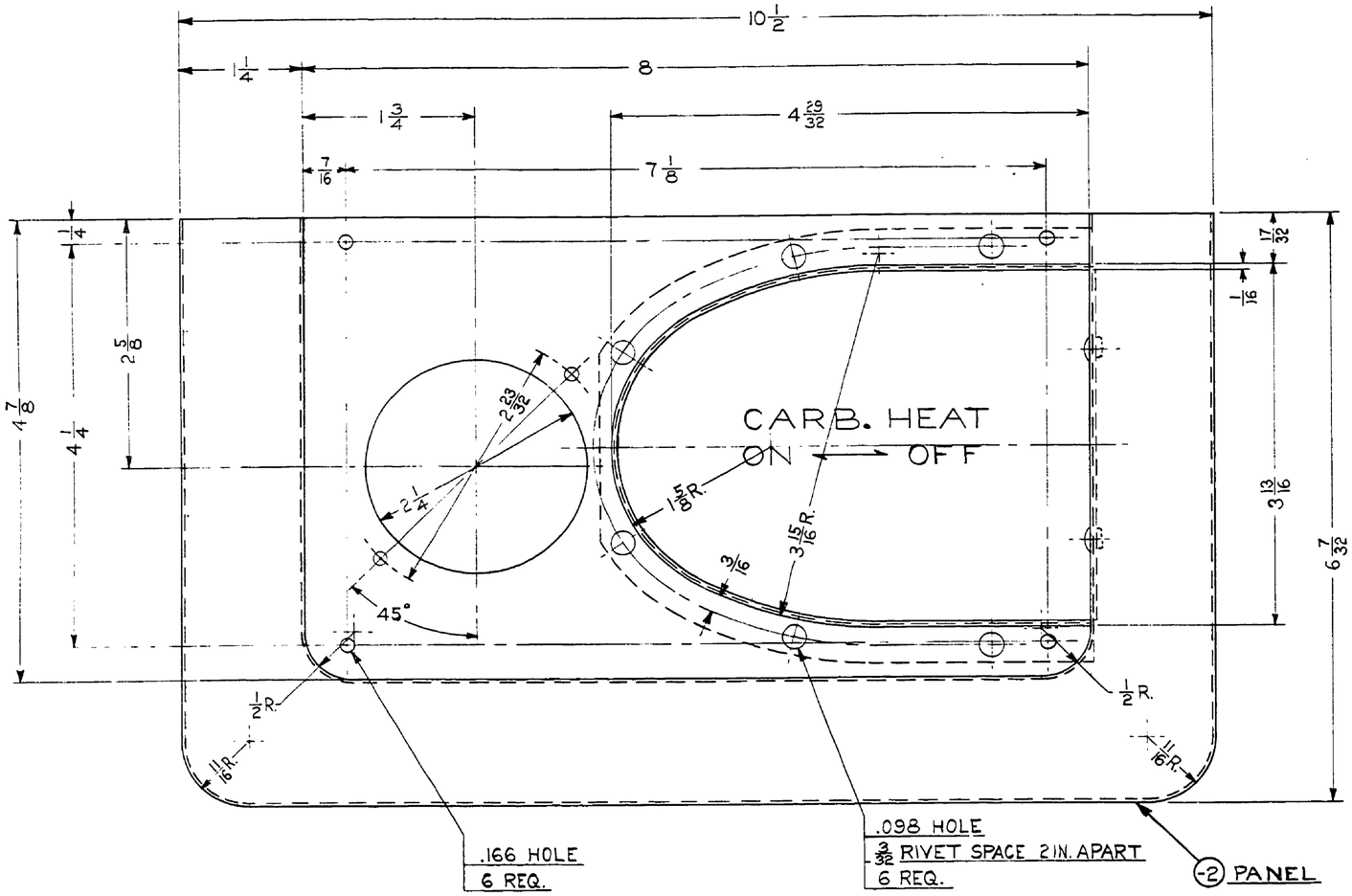

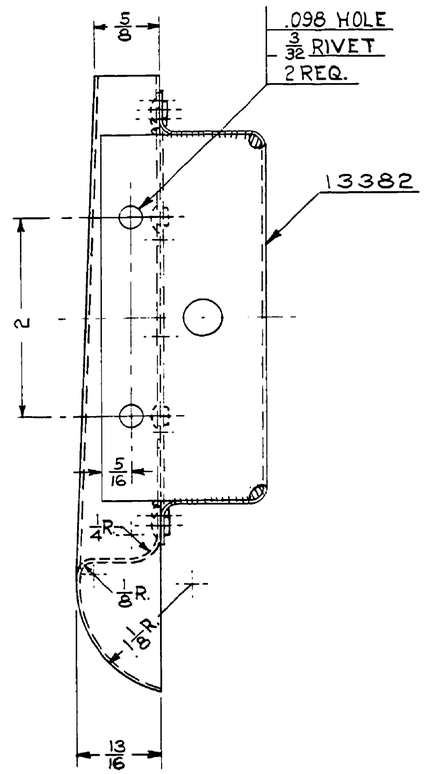

	8	3/32 × 3/16	2S ALUM. BR HD. RIVET
13382	1	BOX	
-2	1	.032 × 7 1/2 × 11 7/8	3S-0 ALUM.
	NO. REQ.	SIZE	DESCRIPTION
PART NO.		MATERIAL	

SCALE FULL SIZE — TOTAL WT.–LBS.

FINISH–PIPER SPECIFICATION #10

MANUFACTURING PRACTICES–PIPER SPECIFICATION #9

PANEL ASSEMBLY – IGNITION SWITCH

THIS DRAWING IS THE PROPERTY OF THE PIPER AIRCRAFT CORP. AND ITS POSSESSION BY UNAUTHORIZED PERSONS SHALL NOT BE CONSTRUED AS PERMISSION TO REPRODUCE FOR SALE, IN WHOLE OR IN PART, ANY DEVICES SHOWN THEREON

LET.	REVISION	DATE	BY

MODEL	PER PLANE	NEXT ASSEMBLY	SUPERSEDES	SUP. BY

PIPER AIRCRAFT CORP.
LOCK HAVEN, PENNA.

H. R. K.	C. E. K.		13383
5-3-51	5-18-51		
DRAFTSMAN	CHECKER	STANDARDS	

781

A781

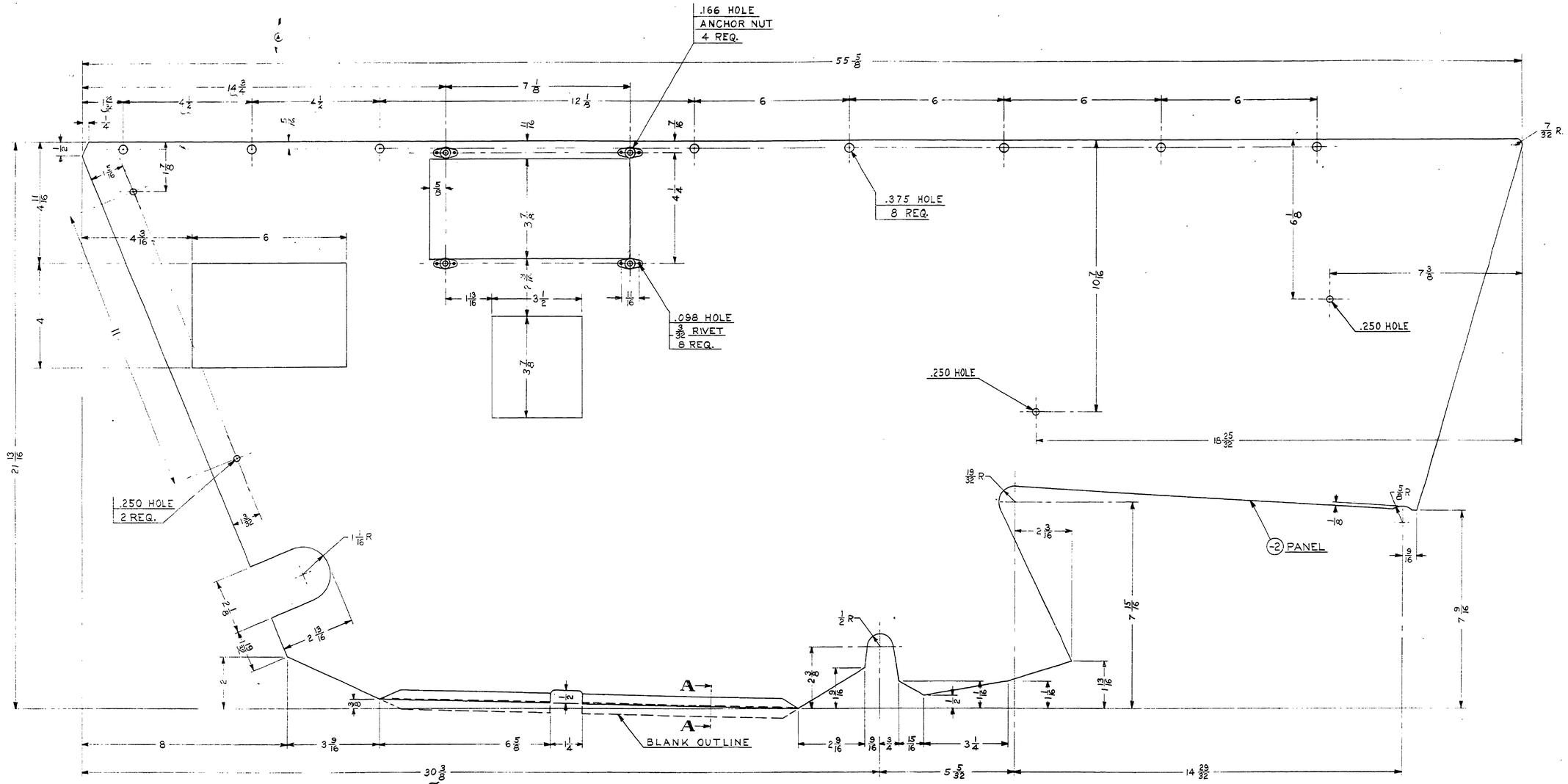

SECTION A-A
FULL SIZE

NOTE :
1. SPRAY NEAR SIDE WITH SOUND DEADENER
#A-31 PURCH. NOX-RUST CHEMICAL CORP.

	8	3/32 x 1/4	FL. HD. 2S ALUM. RIVET
	4	#2241-82 ELAS. STOP NUT	
-2	1	.020 x 21 13/16 x 55 5/8	3S-1/2 H. ALUM.
PART No.	NO. REQ.	SIZE	DESCRIPTION
		MATERIAL	

SCALE 6 IN. = 1 FT. & NOTED — TOTAL WT.—LBS.
FINISH—PIPER SPECIFICATION #10
MANUFACTURING PRACTICES—PIPER SPECIFICATION #9

MODEL	PER PLANE	NEXT ASSEMBLY	SUPERSEDES	SUP. BY

THIS DRAWING IS THE PROPERTY OF THE PIPER AIRCRAFT CORP. AND ITS POSSESSION BY UNAUTHORIZED PERSONS SHALL NOT BE CONSTRUED AS PERMISSION TO REPRODUCE FOR SALE, IN WHOLE OR IN PART, ANY DEVICES SHOWN THEREON.

PANEL ASSEMBLY—
COCKPIT LEFT

LET.	REVISION	DATE	BY
A	ADDED PART NO. 13384-1 & -2	5-18-41	H.R.K.

PIPER AIRCRAFT CORP.
LOCK HAVEN, PENNA.

DRAFTSMAN	CHECKER	STANDARDS
H. R. K. 5-4-41	C. E. K. 5-18-41	

13384

P. B. P. Co. No. 134

A870

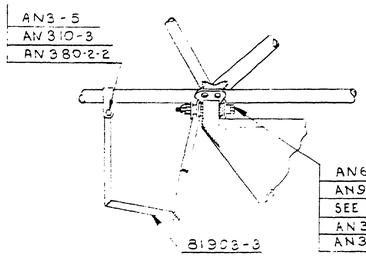

SIDE VIEW
RIGHT REAR LANDING GEAR FITTING

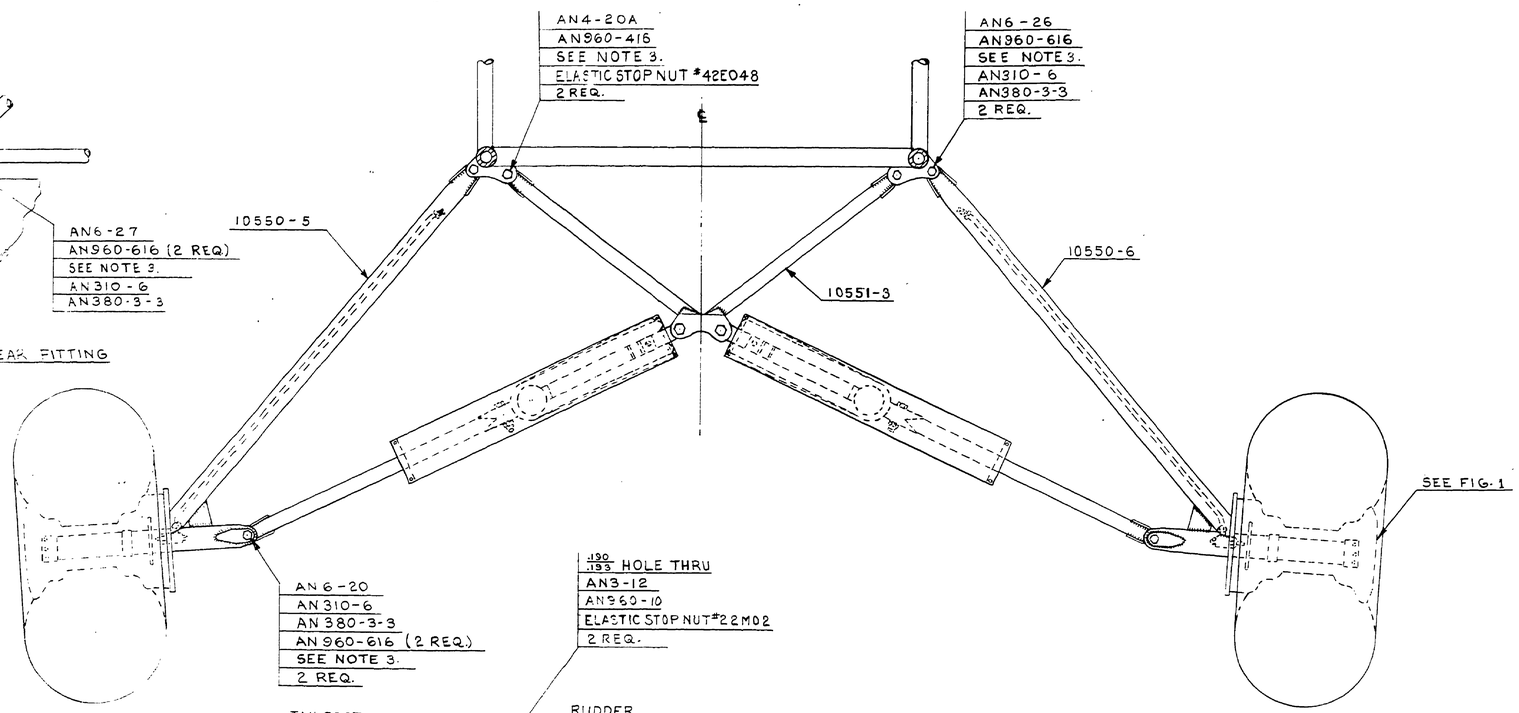

TAILWHEEL INSTALLATION
6 IN. = 1 FT.

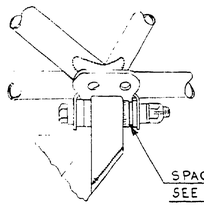

FIG. 2
6 IN. = 1 FT.
TYPICAL LANDING GEAR TO FUSELAGE ATTACHMENT

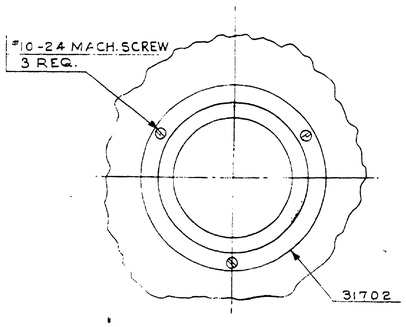

FIG. 1
6 IN. = 1 FT.
HUB CAP INSTALLATION

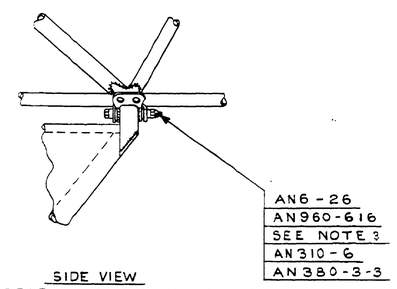

SIDE VIEW
LEFT REAR LANDING GEAR FITTING

SECTION A-A
FULL SIZE

NOTES:

1. VARIATIONS IN SPRING THICKNESS MAY BE COMPENSATED FOR BY LOCATING WASHER AN960-416 EITHER BETWEEN TAILSKID REAR FITTING AND CLAMP OR UNDER NUT
2. WIRE FITTINGS ON ENDS OF SHOCK SPRING MUST BE CLINCHED ON INSTALLATION TO CLOSE GAP.
3. WASHERS WHERE "SEE NOTE 3" IS INDICATED ARE PACK WASHERS TO BE PLACED UNDER NUT.
4. IF SPACE BETWEEN VEE FITTING AND LANDING GEAR FITTING, ON EITHER SIDE OF VEE FITTING, IS 1/32 OR MORE INSERT WASHER AN960-616 OR 85012-12.

	No. REQ.	SIZE	DESCRIPTION MATERIAL
	2	#22M02	ELASTIC STOP NUT
	1	BUSHING #3241-2	(PURCH. SCOTT AVIATION CORP.)
	1	TAILWHEEL ASS'Y #3200	(PURCH. SCOTT AVIATION CORP.)
	1	SPACER #3243-2	(PURCH. SCOTT AVIATION CORP.)
	1	RUDDER ARM ASS'Y #1140	(PURCH. SCOTT AVIATION CORP.)
	2	5 LINKS #35 CORBIN CHAIN	PURCH. SCOTT AVIATION CORP.
	2	LINK #2133	(PURCH. SCOTT AVIATION CORP.)
	2	#42E048	ELASTIC STOP NUT
#10-24	6	3/8 L.	#1010 STL. RD. HD. MACH. SCREW
AN960-616 OR 85012-12	SEE NOTE 4		WASHER
AN960-716	1		
AN960-616	7		WASHER
AN960-416	4		
AN960-10	2		
AN380-3-3	8		COTTER PIN
AN380-2-2	3		
AN310-7	1		
AN310-6	7		NUT
AN310-4	2		
AN310-3	1		
AN7-21	1		
AN6-27	1		
AN6-26	3		
AN6-23	1		
AN6-20	2		BOLT
AN4-20A	2		
AN4-5	2		
AN3-12	2		
AN3-5	1		
85012-48	1		WASHER
81903-3	1		STEP ASS'Y.
80122-41	1		WASHER
80122-30	1		WASHER
31702	2		HUB CAP
30531	1		CLAMP
83991	1		WIRE ASS'Y.
12798	1		SPRING
10999-5	1		SPRING
10999-3	1		SPRING
10999-2	1		SPRING
10551-3	1		...ABANE VEE ASS'Y.
10550-6	1		VEE ASS'Y.
10550-5	1		VEE ASS'Y.

PART NO. | MATERIAL

SCALE 3 IN. = 1 FT. NOTED | TOTAL WT.—LBS.

FINISH—PIPER SPECIFICATION #10

MANUFACTURING PRACTICES—PIPER SPECIFICATION #9

MODEL	PER PLANE	NEXT ASSEMBLY	SUPERSEDES	SUP. BY

THIS DRAWING IS THE PROPERTY OF THE PIPER AIRCRAFT CORP. AND ITS POSSESSION BY UNAUTHORIZED PERSONS SHALL NOT BE CONSTRUED AS PERMISSION TO REPRODUCE FOR SALE, IN WHOLE OR IN PART, ANY DEVICES SHOWN THEREON.

PIPER AIRCRAFT CORP.
LOCK HAVEN, PENNA.

LET.	REVISION	DATE	BY

GEAR INSTALLATION — LANDING

DRAFTSMAN	CHECKER	STANDARDS
V.M. 5-8-51	R.K. 5-14-51	

13385

P. & P. Co. No. 121

871

A871



FIG. 1
AILERON DETAIL

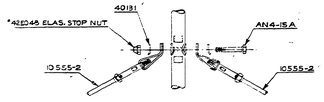

FIG. 5
FIN TIE ROD ATTACHMENT

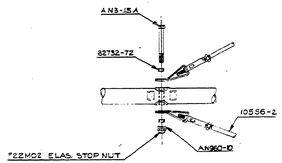

FIG. 6
STABILIZER TIE ROD ATTACHMENT

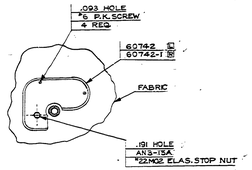

FIG. 7
PANEL INSTALLATION
3 IN. = 1 FT.

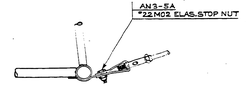

FIG. 8
FUSELAGE TIE ROD ATTACHMENT

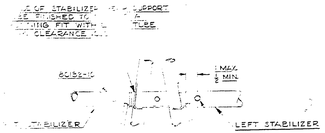

FIG. 2
REAR OF STABILIZER TO FUSELAGE ATTACHMENT

.189 HOLE
#9 AN 5-12
*22M02 ELAS. STOP NUT
AN 960-10
2 REQ.

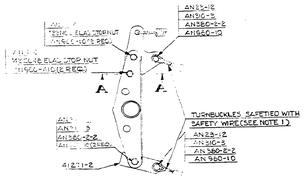

FIG. 3
ELEVATOR HORN & CABLE ATTACHMENT

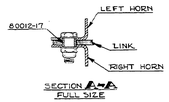

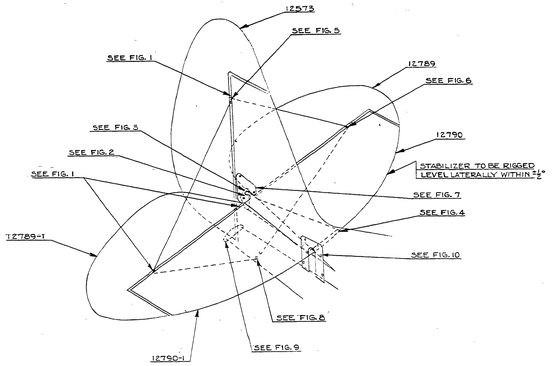

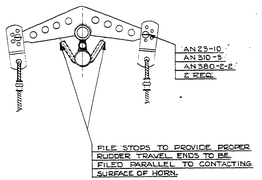

FIG. 9
RUDDER HORN & CABLE ATTACHMENTS

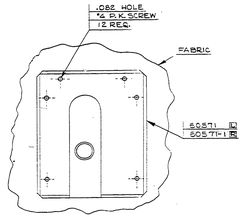

FIG. 10
COVER INSTALLATION

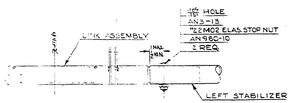

FIG. 4
FRONT OF STABILIZER TO ADJUSTING MECHANISM ATTACHMENT

NOTES:
1. NOT MORE THAN 3 THREADS SHALL BE VISIBLE AT EACH END OF THE TURNBUCKLE BARRELS.
2. .05 MAXIMUM VERTICAL PLAY ALLOWABLE BETWEEN STABILIZER & ADJACENT FUSELAGE STRUCTURE.
3. PARTS MARKED (D) USED ON LEFT SIDE ONLY. PARTS MARKED (E) USED ON RIGHT SIDE ONLY.

B10

AN3-6	1	BOLT	
40131	2	WASHER	
	1	1/8 DIA. SAFETY WIRE	
	8	#10-32 ELAS. STOP NUT	
	2	#6-32 ELAS. STOP NUT	
*E	6	FLAT HEAD 82° R.H. SCR.	
*D	6	" " " " " "	
AN380-2-2	1	CLEVIS PIN	
AN960-10	3	WASHER	
AN960-10L	6	WASHER	
AN380-2-3	1	COTTER PIN	
AN315-8	1	NUT	
AN25-12	6	BOLT	
AN3-17A	1		
AN4-15A	1		
AN3-6	1		
AN1-15A	3		
AN3-13	2		
AN3-12	2		
AN3-5A	3		
82752-72	2	BUSHING	
10532-10	1	NUT PLATE	
10572-1613	2	WASHER	
50012-71	2	BUSHING	
60742-11	1	TAIL SECTION PANEL	
60742	1		
60571-1	1	STABILIZER YOKE COVER	
60571	1		
41271-2	1	LINK	
12790-11	1	STABILIZER ASSY.	
12790	1		
12789-11	1	ELEVATOR ASSY.	
12789	1		
12573	1	RUDDER ASSY.	
10536-2	2	WIRE ASSY.	
10536-1	2		

NO.	REQ'D	DESCRIPTION
PART NO.		MATERIAL

NOTE 4 (SEE NOTE 1) UNLESS OTHERWISE SPECIFIED ALL FINISHES SHALL CONFORM TO MANUFACTURERS SPECIFICATION AND MANUFACTURERS PRACTICE. PAINT SPECIFICATIONS TO BE

"This drawing is the property of the Piper Aircraft Corp. and shall not be reproduced or copied or used in whole or in part nor exhibited or loaned without written permission."

NO.	REVISION	DATE	BY

MODEL PA-E PLANE PART (ASSEMBLY) (INSTRUMENT) SET BY

PIPER AIRCRAFT CORP.
LOCK HAVEN, PENNA.

SURFACES INSTALLATION - TAIL

DRAWING NO.	SHEET NO.	REV.
13390		

DRAWN: SHEFFIELD CHECKED: GRAUEL APPROVED:

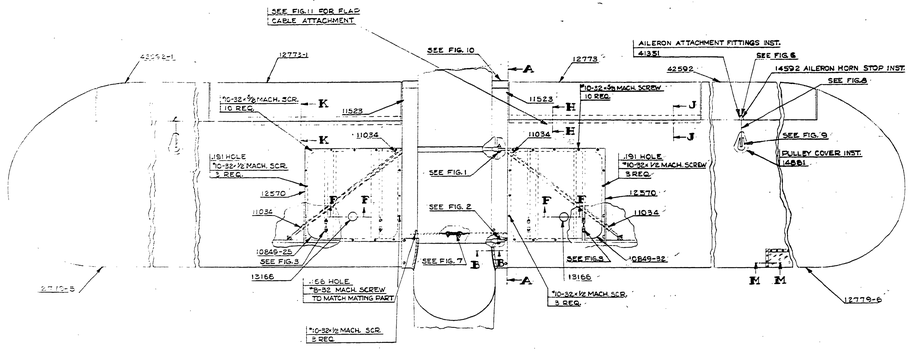

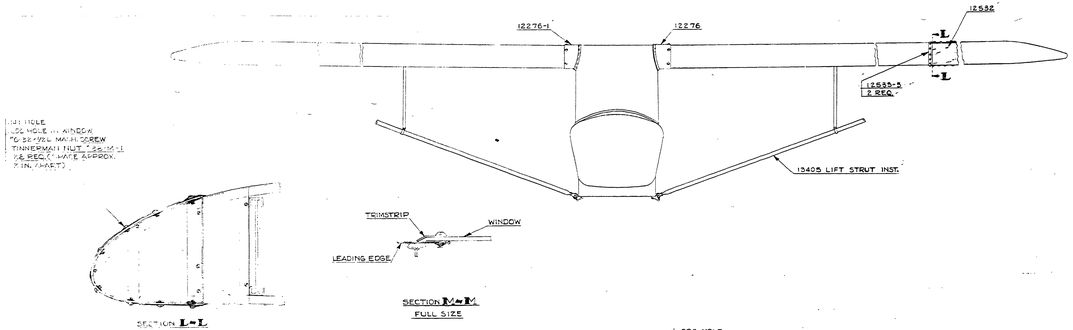

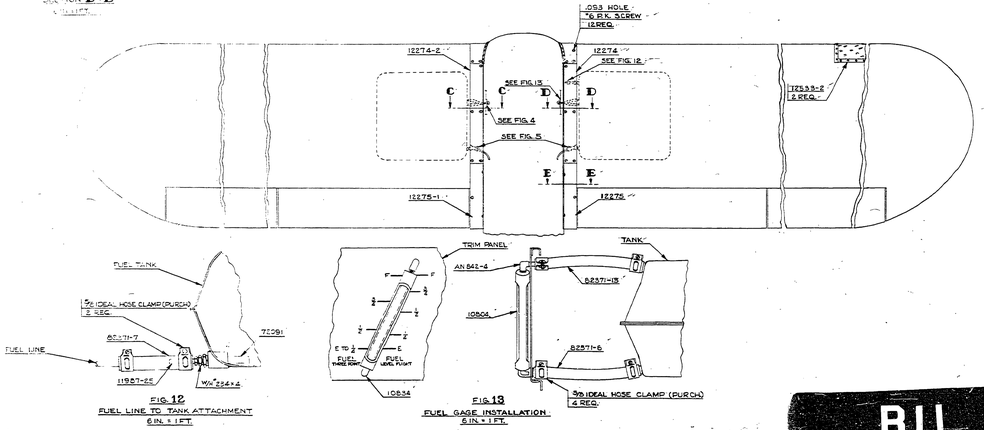

FIG. 12
FUEL LINE TO TANK ATTACHMENT
6 IN. = 1 FT.

FIG. 13
FUEL GAGE INSTALLATION
6 IN. = 1 FT.

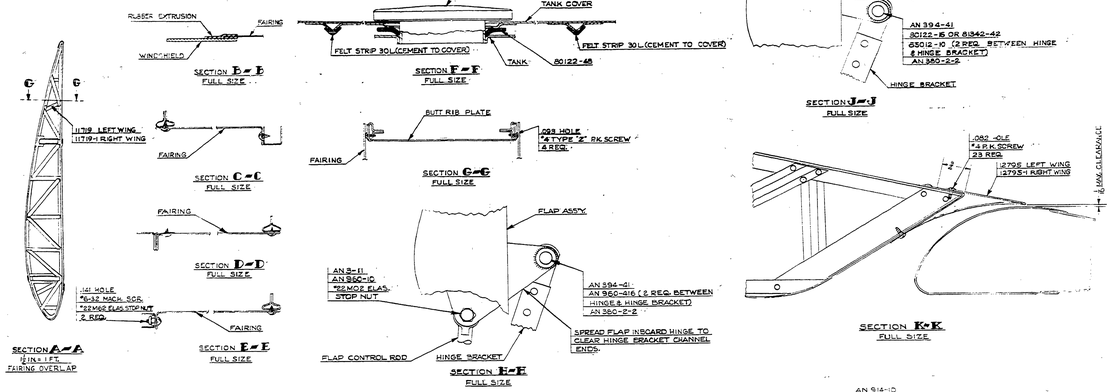

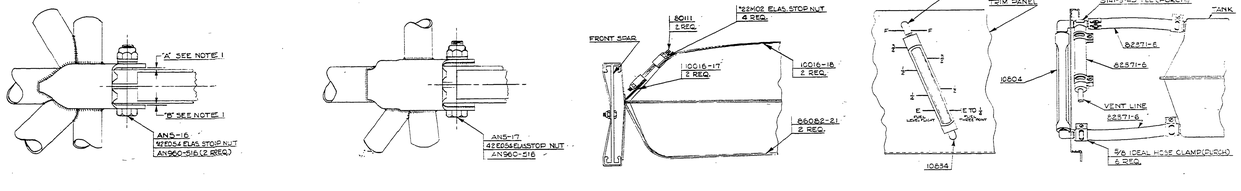

FIG. 1
WING ATTACHMENT AT REAR SPAR
FULL SIZE

FIG. 2
WING ATTACHMENT AT FRONT SPAR
FULL SIZE

FIG. 3
FUEL TANK INSTALLATION
6 IN. = 1 FT.

FIG. 4
FUEL GAGE INSTALLATION
6 IN. = 1 FT.

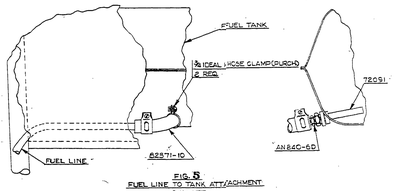

FIG. 5
FUEL LINE TO TANK ATT/ACHMENT
6 IN. = 1 FT.

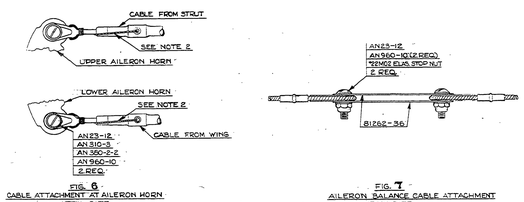

FIG. 6
CABLE ATTACHMENT AT AILERON HORN
FULL SIZE

FIG. 7
AILERON BALANCE CABLE ATTACHMENT
FULL SIZE

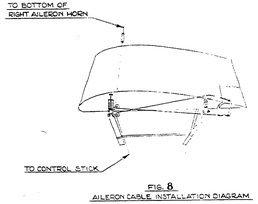

FIG. 8
AILERON CABLE INSTALLATION DIAGRAM

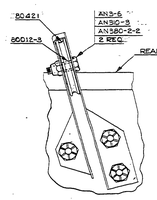

FIG. 9
PULLEY INSTALLATION
FULL SIZE

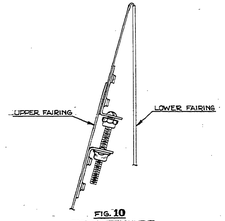

FIG. 10
FAIRING ATTACHMENT
FULL SIZE

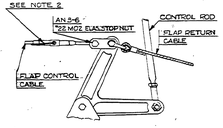

FIG. 11
FLAP CABLE ATTACHMENT
6 IN. = 1 FT.

NOTES:
1. "A" & "B" MUST NOT EXCEED 3/32 INCH, WHEN EITHER "A" OR "B" EXCEEDS 1/32 INCH, SHIM WITH WASHERS AN 960-516 L TO SUIT.
2. TURNBUCKLES SAFTIED WITH .040 BRASS SAFETY WIRE. NOT MORE THAN TWO THREADS SHOULD BE VISIBLE AT EACH END OF TURNBUCKLE BARREL.

12551-2	2		.32 .VS. BRASS SAFETY WIRE
12552-2	2		STRIP
12553-			WASHER
			.190-.191 TINNERMAN NUT
			TEE *5141-3-10
	2		HOSE CLAMP(SEAL)
	6		HOSE CLAMP(SEAL)
	1		WN *2264-4
	4		42E0534 ELAS STOP NUT
	4		*22M6S ELAS. STOP NUT
	6		*22M6Z ELAS. STOP NUT
*6-32	50		TRUSS HD. MACH. SCREW
*10-32	12		
*8-32	2		82 DEG. FLAT HD. MACHINE SCREW
*6-32	2		100 DEG. FLAT HD. MACHINE SCREW
*6	4		TYPE "A" STOVE HD. R.K. SCREW
*6	8		TYPE "A" FLAT HD. R.K. SCREW
*6	36		TYPE "A" STOVE HD. R.K. SCREW
AN960-516L			
AN960-516L	6		WASHER
AN960-416	4		
AN960-10-10			
AN916-3			ELBOW
AN924-4			
AN820-60	2		NIPPLE
AN386-41	4		FLAT HEAD PIN
AN380-2-2	15		COTTER PIN
AN310-3	5		NUT
AN23-12	6		
AN5-17	2		
AN5-16	2		BOLT
AN3-11	2		
AN3-6	4		
66065-51	2		FELT
65012-10	1		WASHER
AN8-11			
AN960-416L	2		PINS
82371-17			
82371-			
10780	12		LINK
10781	2		PULLEY
10-10-48	2		WASHER
3-2-10			
11502-45			WASHER
10-1			PLATE
1000-2-3	2		WASHING
12791	1		TRAINER ASSEMBLY
12598-21	1		AILERON ASSEMBLY
12592	1		
41351	6		FITTING INSTALLATION
1658-2	2		RIVET INSTALLATION
12592	2		FITTING INSTALLATION
13166	2		SPAR ASSEMBLY
12795-1	1		SKIN
12795	1		SKIN
12775-1	1		WING PANEL ASSEMBLY
12775-5	1		
12775-1	1		FLAP ASSEMBLY
12775	2		
12570	2		TANK COVER ASSEMBLY
11671-1	1		
1210	1		FAIRING ASSEMBLY
1210-1	1		
12675	1		
12674-2	1		FAIRING
12674	1		
13870-25	1		TUBE ASSEMBLY
11719-1	1		BUTT RIB PLATE ASSY
11713	2		
11583	2		FAIRING ASSEMBLY
11094	4		COVER ASSEMBLY
10659-51	1		TANK ASSEMBLY
10659-51	1		
10834	2		ELBOW
10614	2		GAGE ASSEMBLY
13405	2		LIFT STRUT INSTALLATION
10016-17	4		FELT
10016-17	2		

NO.	REVISION	DATE	BY

PIPER AIRCRAFT CORP.
LOCK HAVEN, PENNA.

WING INSTALLATION

DRAWN	6-5-61	SIZE	DRAWING NO.
TRACED	6-5-61	D	13387
CHECKED	STANDARD		

BII

BII

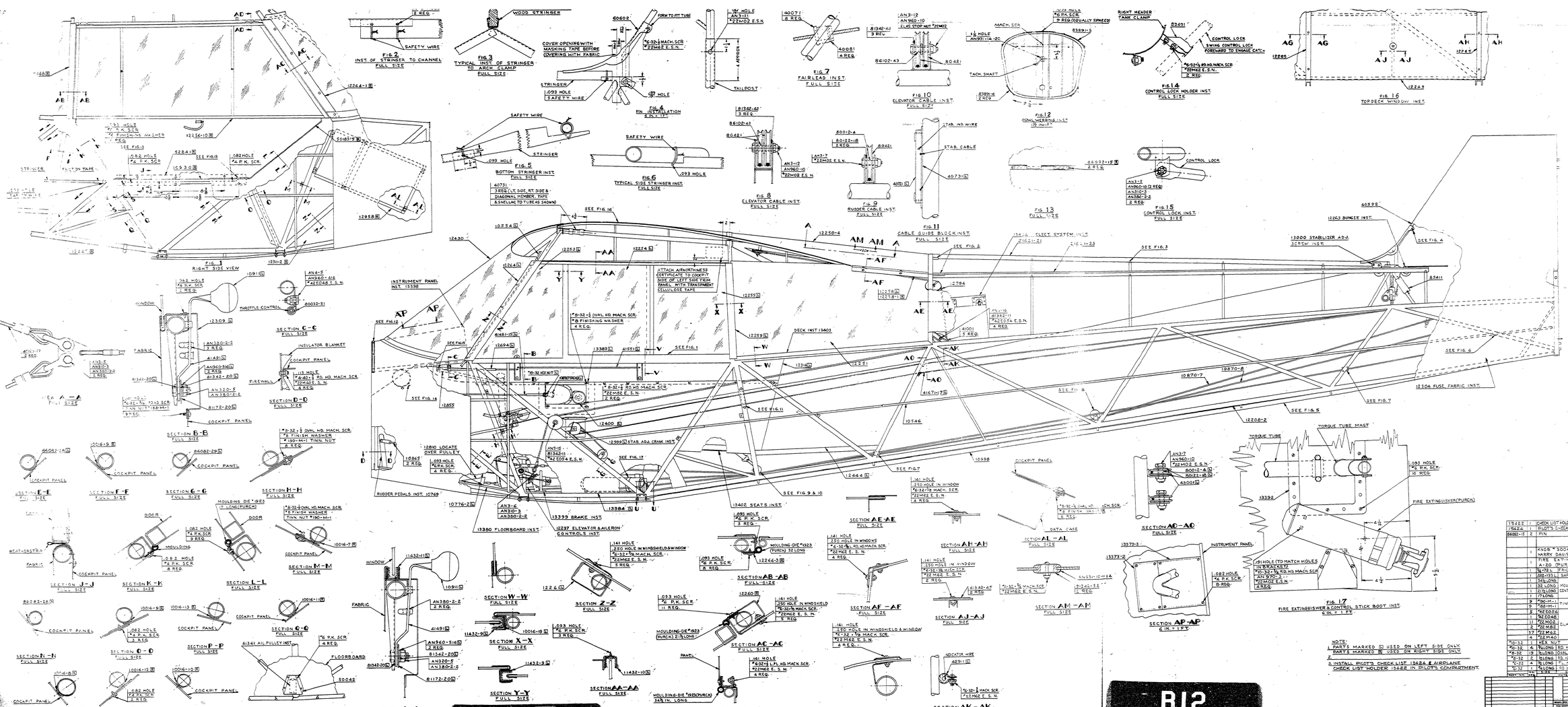

ITEM	QTY	DESCRIPTION
*2	10	FINISHING WASHER
*2	6	SCR
*2	20	SCR LOW TYPE STOP NUT
*2	34	SCR LOW
MS51400-1		GROMMET
AN931-0-16		
AN970-3	4	
AN960-516	4	WASHER
AN960-1032	1	
AN960-10	8	
AN380-2-2	12	COTTER PIN
AN310-5-2	1	NUT
AN310-3	5	
AN3-16	4	
AN3-15	1	
AN4-5	1	
AN3-15	2	BOLT
AN3-11	1	
AN3-7	4	
AN3-6	1	
AN3-5	1	
S6C1024-3	2	BUSHING
660826-251	1	FELT STRIP
660826-261	2	
83411	1	PLEXIGLAS
83891-0-L	2	ALCLAD
83891-0-R	2	ALCLAD
41691	1	
81342-5-2	2	
81342-4-C	2	WASHER
81342-4-C	4	WASHER
81342-1-2	4	
81342-1-1	2	
81172-20	1	
81172-10	1	
80421	6	
80421	4	
80421	1	
80032-91-1	1	
80032-91-2	1	
80032-91-3	1	
80032-91-4	1	
60602	1	FAIRLEAD
60602	1	FAIRLEAD
52841	1	
50083-5	1	DOOR ASSY.
50043	2	COVER
43001	2	PULLEY
42911	1	FAIRLEAD
41671-11	1	CABLE
41551	1	THROTTLE LINK
41491	2	THROTTLE LEVER
41481-15	1	CABLE ASSY.
41161	2	CLEVIS INST.
41001	5	PULLEY
40731	4	PULLEY
40721	1	GUIDE BLOCK
40592	1	PIN
40083-777	2	CABLE ASSY.
40081	4	SNAP D RG
40079	8	FAIRLEAD STGMNT
2161-21-5	1	STRINGER
2161-21-1	1	
13404	1	ELEV. SYSTEM INST
13403	1	DECK INST.
13402	1	SEAT INST.
13399	1	INSTRUMENT PANEL ASY.
13398	1	
13384	1	FLOORBOARDS INST.
13373-3	1	
13372-2	1	PLATE
13000	1	STAB. ADJ. YOKE INST.
12999	1	STAB. ADJ. CRANK INST.
12958	1	DATA CASE ASSY.
12857	1	CONTROL STICK LOCK ASY
12810	1	PULLEY COVER
12394	1	CABLE ASSY.
11698	1	THROTTLE CONTROL ASY
12443	1	PANEL
12442	1	PANEL ASSY.
12430	1	WINDSHIELD
12400	1	STAB. ADJ. CRANK ASSY.
12314	1	PANEL ASSY.
10776-2	1	RUDDER PEDAL ASSY.
10309	1	PANEL ASSY.
10304	1	FABRIC
10266-3	1	MOULDING ATTACH. STRIP
10265	2	
10266-1	1	
10264	1	
10263	1	
10261	1	
10258	1	
10250	1	WINDOW ASSY.
10254	1	
10255	1	
10259	1	WINDOW
12249	1	
10237	1	CONTROL INST.
12238-2	1	FUSE. FRAME & SUP'T ASSY.
11420-2	1	
11432-10	1	WEATHERSTRIP CHANNEL
11432-9	1	
10998	1	STRINGER
10936	1	PANEL
10911	1	WINDOW ASSY.
10876-8	1	CABLE ASSY.
10870-7	1	CABLE ASSY.
10868	2	CABLE ASSY.
10776-2	1	RUDDER PEDALS ASY.
10749	1	BUS. 1/2 PEDALS ASY.
10648	1	FELT STRIP
10642	2	SEAT TUBE ASY.
10546	2	STOP ROGER
10516-9	1	
10514-13	1	
10514-11	1	
10514-10	1	
10514-9	2	
10514-8	2	
10514-7	1	
10514-6	1	
10514-5	1	
10514-4	1	
10514-3	1	
10514-2	1	
10514-1	1	
10513-1	1	
10512-1	1	
10511-1	1	
10510-1	1	
10509-1	1	
10508-1	1	
10507-1	1	
10506-1	1	
10505-1	1	
10504-1	1	
10503-1	1	
10502-1	1	
10501-1	1	
10500-1	1	
10499-1	1	
10498-1	1	
10497-1	1	
10496-1	1	
10495-1	1	
10494-1	1	
10493-1	1	
10492-1	1	
10491-1	1	
10490-1	1	
10489-1	1	
10488-1	1	
10487-1	1	
10486-1	1	
10485-1	1	
10484-1	1	
10483-1	1	
10482-1	1	
10481-1	1	
10480-1	1	
10479-1	1	
10478-1	1	
10477-1	1	
10476-1	1	
10475-1	1	
10474-1	1	
10473-1	1	
10472-1	1	
10471-1	1	
10470-1	1	
10469-1	1	
10468-1	1	
10467-1	1	
10466-1	1	
10465-1	1	
10464-1	1	
10463-1	1	
10462-1	1	
10461-1	1	
10460-1	1	
10459-1	1	
10458-1	1	
10457-1	1	
10456-1	1	
10455-1	1	
10454-1	1	
10453-1	1	
10452-1	1	
10451-1	1	
10450-1	1	
10449-1	1	
10448-1	1	
10447-1	1	
10446-1	1	
10445-1	1	
10444-1	1	
10443-1	1	
10442-1	1	
10441-1	1	
10440-1	1	
10439-1	1	
10438-1	1	
10437-1	1	
10436-1	1	
10435-1	1	
10434-1	1	
10433-1	1	
10432-1	1	
10431-1	1	
10430-1	1	
10429-1	1	
10428-1	1	
10427-1	1	
10426-1	1	
10425-1	1	
10424-1	1	
10423-1	1	
10422-1	1	
10421-1	1	
10420-1	1	
10419-1	1	
10418-1	1	
10417-1	1	
10416-1	1	
10415-1	1	
10414-1	1	
10413-1	1	
10412-1	1	
10411-1	1	
10410-1	1	
10409-1	1	
10408-1	1	
10407-1	1	
10406-1	1	
10405-1	1	
10404-1	1	
10403-1	1	
10402-1	1	
10401-1	1	
10400-1	1	
10399-1	1	
10398-1	1	
10397-1	1	
10396-1	1	
10395-1	1	
10394-1	1	
10393-1	1	
10392-1	1	
10391-1	1	
10390-1	1	
10389-1	1	
10388-1	1	
10387-1	1	
10386-1	1	
10385-1	1	
10384-1	1	
10383-1	1	
10382-1	1	
10381-1	1	
10380-1	1	
10379-1	1	
10378-1	1	
10377-1	1	
10376-1	1	
10375-1	1	
10374-1	1	
10373-1	1	
10372-1	1	
10371-1	1	
10370-1	1	
10369-1	1	
10368-1	1	
10367-1	1	
10366-1	1	
10365-1	1	
10364-1	1	
10363-1	1	
10362-1	1	
10361-1	1	
10360-1	1	
10359-1	1	
10358-1	1	
10357-1	1	
10356-1	1	
10355-1	1	
10354-1	1	
10353-1	1	
10352-1	1	
10351-1	1	
10350-1	1	
10349-1	1	
10348-1	1	
10347-1	1	
10346-1	1	
10345-1	1	
10344-1	1	
10343-1	1	
10342-1	1	
10341-1	1	
10340-1	1	
10339-1	1	
10338-1	1	
10337-1	1	
10336-1	1	
10335-1	1	
10334-1	1	
10333-1	1	
10332-1	1	
10331-1	1	
10330-1	1	
10329-1	1	
10328-1	1	
10327-1	1	
10326-1	1	
10325-1	1	
10324-1	1	
10323-1	1	
10322-1	1	
10321-1	1	
10320-1	1	
10319-1	1	
10318-1	1	
10317-1	1	
10316-1	1	
10315-1	1	
10314-1	1	
10313-1	1	
10312-1	1	
10311-1	1	
10310-1	1	
10309-1	1	
10308-1	1	
10307-1	1	
10306-1	1	
10305-1	1	
10304-1	1	
10303-1	1	
10302-1	1	
10301-1	1	
10300-1	1	
10299-1	1	
10298-1	1	
10297-1	1	
10296-1	1	
10295-1	1	
10294-1	1	
10293-1	1	
10292-1	1	
10291-1	1	
10290-1	1	
10289-1	1	
10288-1	1	
10287-1	1	
10286-1	1	
10285-1	1	
10284-1	1	
10283-1	1	
10282-1	1	
10281-1	1	
10280-1	1	
10279-1	1	
10278-1	1	
10277-1	1	
10276-1	1	
10275-1	1	
10274-1	1	
10273-1	1	
10272-1	1	
10271-1	1	
10270-1	1	
10269-1	1	
10268-1	1	
10267-1	1	
10266-1	1	
10265-1	1	
10264-1	1	
10263-1	1	
10262-1	1	
10261-1	1	
10260-1	1	
10259-1	1	
10258-1	1	
10257-1	1	
10256-1	1	
10255-1	1	
10254-1	1	
10253-1	1	
10252-1	1	
10251-1	1	
10250-1	1	
10249-1	1	
10248-1	1	
10247-1	1	
10246-1	1	
10245-1	1	
10244-1	1	
10243-1	1	
10242-1	1	
10241-1	1	
10240-1	1	
10239-1	1	
10238-1	1	
10237-1	1	
10236-1	1	
10235-1	1	
10234-1	1	
10233-1	1	
10232-1	1	
10231-1	1	
10230-1	1	
10229-1	1	
10228-1	1	
10227-1	1	
10226-1	1	
10225-1	1	
10224-1	1	
10223-1	1	
10222-1	1	
10221-1	1	
10220-1	1	
10219-1	1	
10218-1	1	
10217-1	1	
10216-1	1	
10215-1	1	
10214-1	1	
10213-1	1	
10212-1	1	
10211-1	1	
10210-1	1	
10209-1	1	
10208-1	1	
10207-1	1	
10206-1	1	
10205-1	1	
10204-1	1	
10203-1	1	
10202-1	1	
10201-1	1	
10200-1	1	
10199-1	1	
10198-1	1	
10197-1	1	
10196-1	1	
10195-1	1	
10194-1	1	
10193-1	1	
10192-1	1	
10191-1	1	
10190-1	1	
10189-1	1	
10188-1	1	
10187-1	1	
10186-1	1	
10185-1	1	
10184-1	1	
10183-1	1	
10182-1	1	
10181-1	1	
10180-1	1	
10179-1	1	
10178-1	1	
10177-1	1	
10176-1	1	
10175-1	1	
10174-1	1	
10173-1	1	
10172-1	1	
10171-1	1	
10170-1	1	
10169-1	1	
10168-1	1	
10167-1	1	
10166-1	1	
10165-1	1	
10164-1	1	
10163-1	1	
10162-1	1	
10161-1	1	
10160-1	1	
10159-1	1	
10158-1	1	
10157-1	1	
10156-1	1	
10155-1	1	
10154-1	1	
10153-1	1	
10152-1	1	
10151-1	1	
10150-1	1	
10149-1	1	
10148-1	1	
10147-1	1	
10146-1	1	
10145-1	1	
10144-1	1	
10143-1	1	
10142-1	1	
10141-1	1	
10140-1	1	
10139-1	1	
10138-1	1	
10137-1	1	
10136-1	1	
10135-1	1	
10134-1	1	
10133-1	1	
10132-1	1	
10131-1	1	
10130-1	1	
10129-1	1	
10128-1	1	
10127-1	1	
10126-1	1	
10125-1	1	
10124-1	1	
10123-1	1	
10122-1	1	
10121-1	1	
10120-1	1	
10119-1	1	
10118-1	1	
10117-1	1	
10116-1	1	
10115-1	1	
10114-1	1	
10113-1	1	
10112-1	1	
10111-1	1	
10110-1	1	
10109-1	1	
10108-1	1	
10107-1	1	
10106-1	1	
10105-1	1	
10104-1	1	
10103-1	1	
10102-1	1	
10101-1	1	
10100-1	1	
10099-1	1	
10098-1	1	
10097-1	1	
10096-1	1	
10095-1	1	
10094-1	1	
10093-1	1	
10092-1	1	
10091-1	1	
10090-1	1	
10089-1	1	
10088-1	1	
10087-1	1	
10086-1	1	
10085-1	1	
10084-1	1	
10083-1	1	
10082-1	1	
10081-1	1	
10080-1	1	
10079-1	1	
10078-1	1	
10077-1	1	
10076-1	1	
10075-1	1	
10074-1	1	
10073-1	1	
10072-1	1	
10071-1	1	
10070-1	1	
10069-1	1	
10068-1	1	
10067-1	1	
10066-1	1	
10065-1	1	
10064-1	1	
10063-1	1	
10062-1	1	
10061-1	1	
10060-1	1	
10059-1	1	
10058-1	1	
10057-1	1	
10056-1	1	
10055-1	1	
10054-1	1	
10053-1	1	
10052-1	1	
10051-1	1	
10050-1	1	
10049-1	1	
10048-1	1	
10047-1	1	
10046-1	1	
10045-1	1	
10044-1	1	
10043-1	1	
10042-1	1	
10041-1	1	
10040-1	1	
10039-1	1	
10038-1	1	
10037-1	1	
10036-1	1	
10035-1	1	
10034-1	1	
10033-1	1	
10032-1	1	
10031-1	1	
10030-1	1	
10029-1	1	
10028-1	1	
10027-1	1	
10026-1	1	
10025-1	1	
10024-1	1	
10023-1	1	
10022-1	1	
10021-1	1	
10020-1	1	
10019-1	1	
10018-1	1	
10017-1	1	
10016-1	1	
10015-1	1	
10014-1	1	
10013-1	1	
10012-1	1	
10011-1	1	
10010-1	1	
10009-1	1	
10008-1	1	
10007-1	1	
10006-1	1	
10005-1	1	
10004-1	1	
10003-1	1	
10002-1	1	
10001-1	1	
10000-1	1	

ITEM	QTY	DESCRIPTION
13422	1	CHECK LIST HOLDER (SEE NOTE 3)
13424	1	PILOT'S CHECK LIST (SEE NOTE 3)
86060-11	2	PIN
	1	KNOB "3004-S (PURCH - HARRY DAVIS MOULDING CO)
	1	FIRE EXTINGUISHER "TYPE A-20 (PURCH)
	1	*6721 FRICTION TAPE
	1	1082-133-L SAFETY WIRE
	1	1345-LONG
	1	32 LONG MOULDING DIE*1923
	1	2076-LONG CENTRAL RIDGE MDG
	1	17 LONG
	9	*90-M-1 FINNERMAN NUT
	9	*88-M-1
	1	*6E5048
	1	*6E2048
	2	*22 M20
	2	*22 M82
	17	*22 M62
	4	*28 M60
*0-32	1	HEX NUT
*0-32	4	*6 LONG RD HD MACH. SCR.
*8-32	19	*8 LONG OVAL HD MACH. SCR.
*8-32	2	*8 LONG RD HD MACH SCR.
*8-32	4	*8 LONG FL HD MACH SCR.
*8-32	1	*8 LONG RD HD MACH SCR.
*8-32	1	*8 LONG OVAL HD MACH SCR.

NOTE:
1. PARTS MARKED (L) USED ON LEFT SIDE ONLY
PARTS MARKED (R) USED ON RIGHT SIDE ONLY.
2.
3. INSTALL PILOT'S CHECK LIST 13424 & AIRPLANE CHECK LIST HOLDER 13422 IN PILOT'S COMPARTMENT.

REV.	ZONE	DESCRIPTION	DATE	APPROVED
A		ADDED ITEMS 13422, 13424 & 86060-11	6-5-68	

PIPER AIRCRAFT CORP. LOCK HAVEN, PENNA.

FUSELAGE ASSEMBLY (COMPLETE)

13388

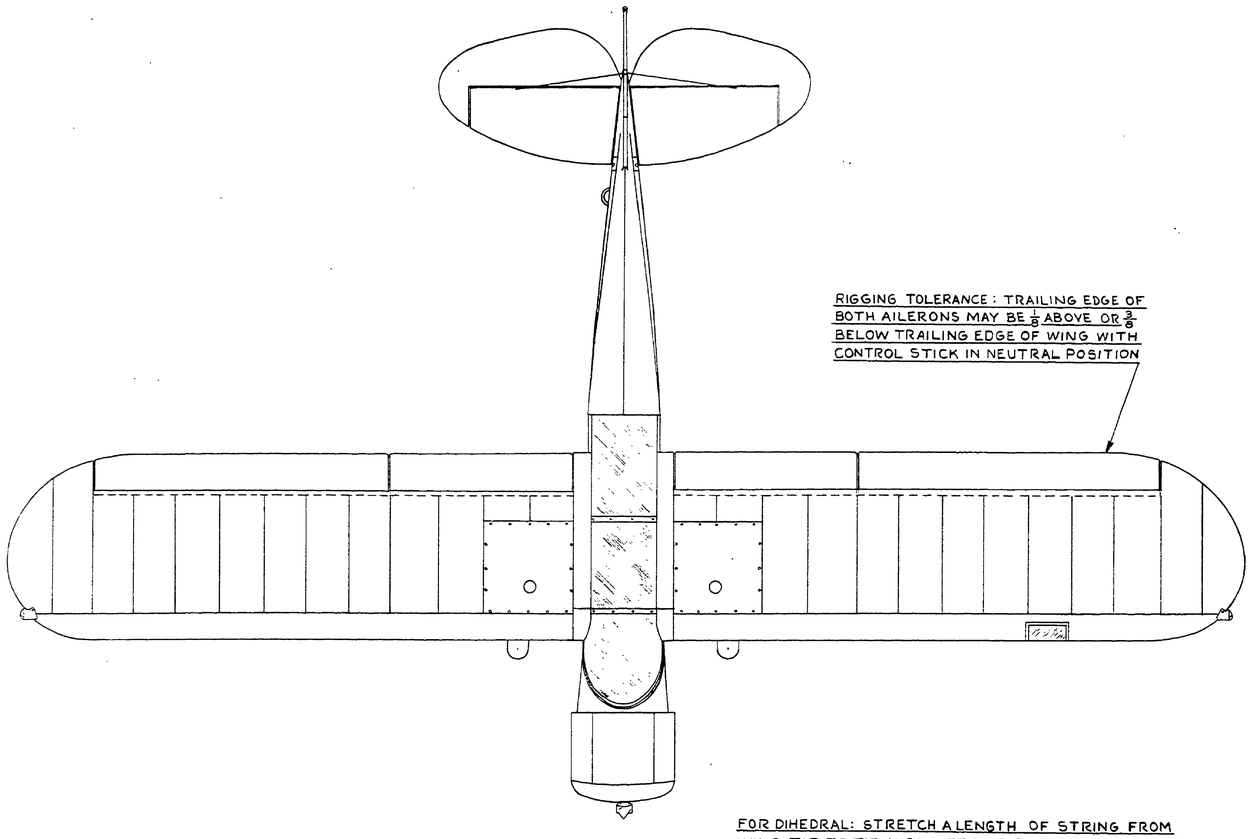

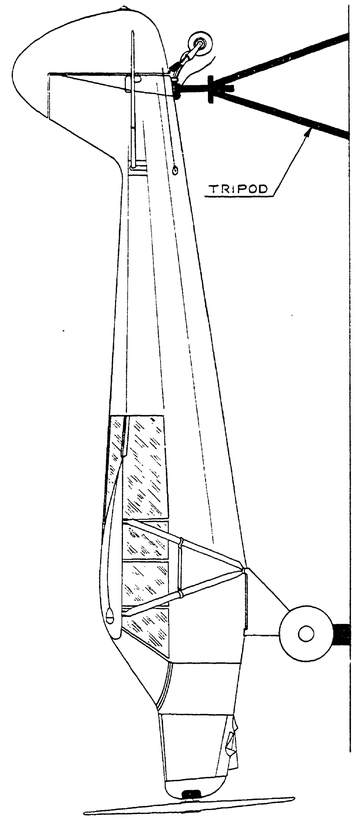

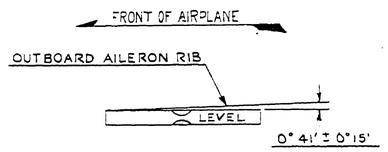

FIG. 2

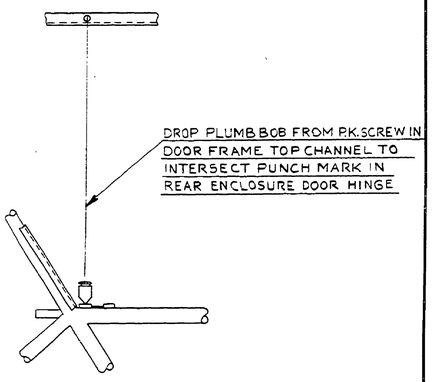

FIG. 1
LEVELING
3 IN. = 1 FT.

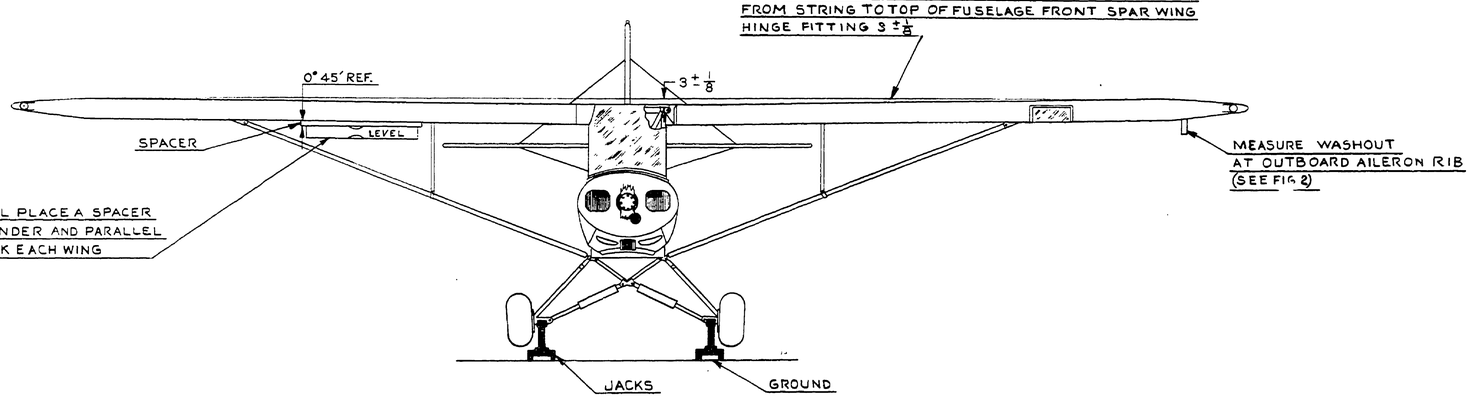

NOTE:
LEVEL AIRPLANE (LATERALLY & LONGITUDINALLY) (SEE FIG. 1)

LET.	REVISION	DATE	BY

MODEL	PER PLANE	NEXT ASSEMBLY	SUPERSEDES	SUP. BY

THIS DRAWING IS THE PROPERTY OF THE PIPER AIRCRAFT CORP. AND ITS POSSESSION BY UNAUTHORIZED PERSONS SHALL NOT BE CONSTRUED AS PERMISSION TO REPRODUCE FOR SALE, IN WHOLE OR IN PART, ANY DEVICES SHOWN THEREON.

PIPER AIRCRAFT CORP.
LOCK HAVEN, PENNA.

PART NO.	NO. REQ.	MATERIAL
SCALE 3 IN. = 1 FT. & NOTED		TOTAL WT.-LBS.
FINISH—PIPER SPECIFICATION #10		
MANUFACTURING PRACTICES—PIPER SPECIFICATION #9		

RIGGING DIAGRAM

DRAFTSMAN	CHECKER	STANDARDS
I.M.M 5-17-51	H.R.K 5-18-51	

13389

P. B. P. Co. No. 124

A872

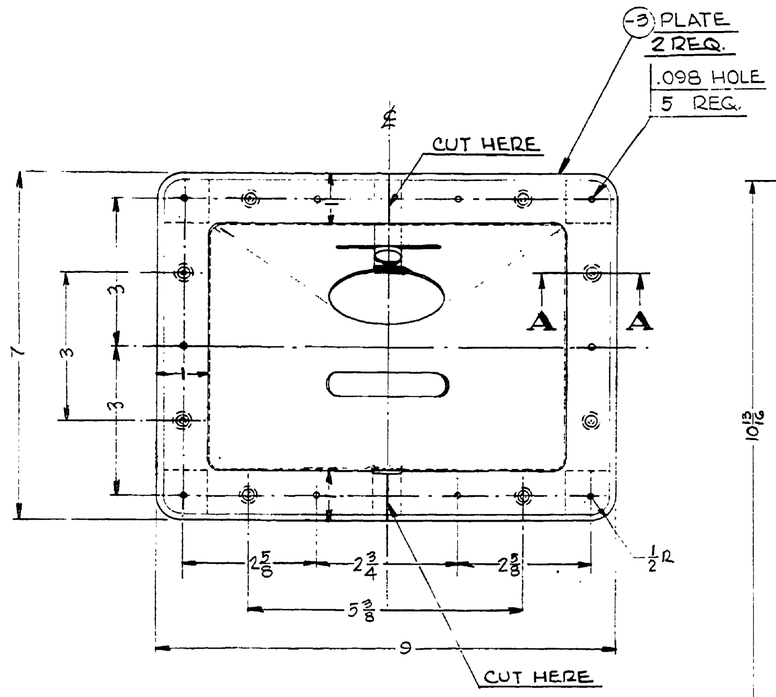

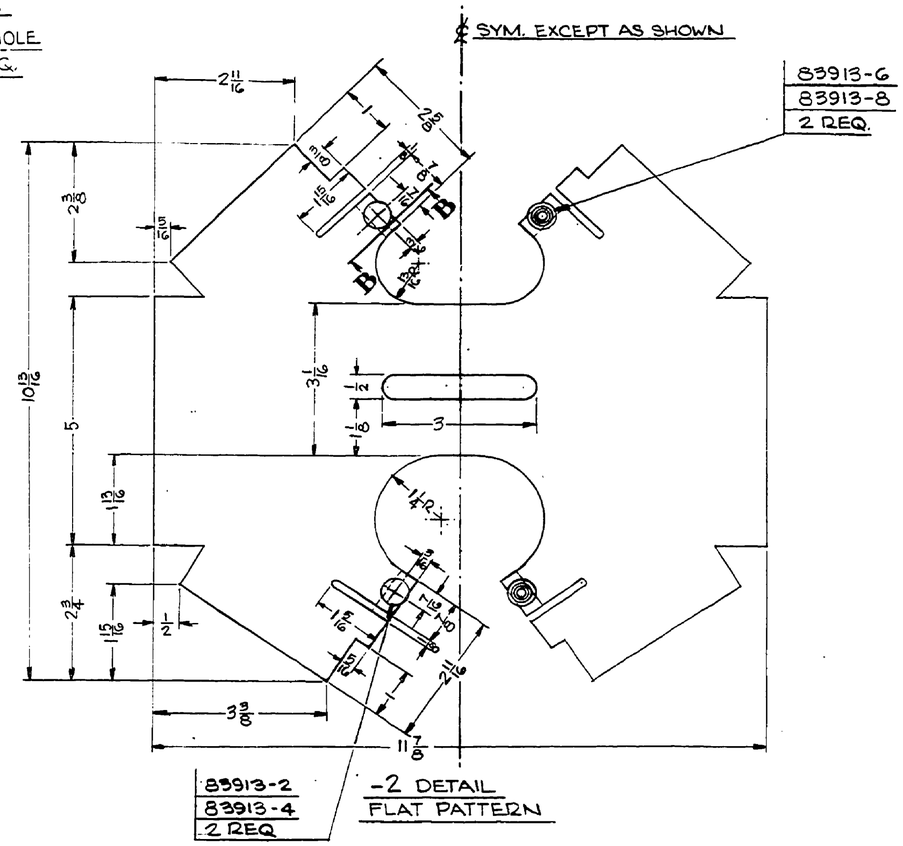

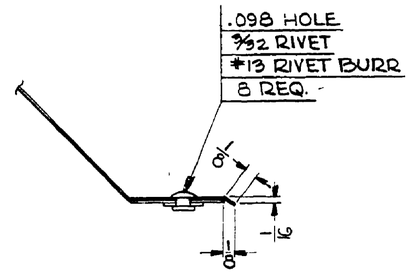

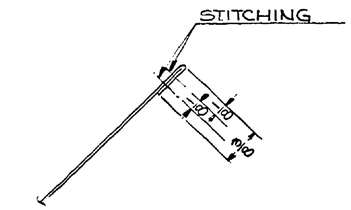

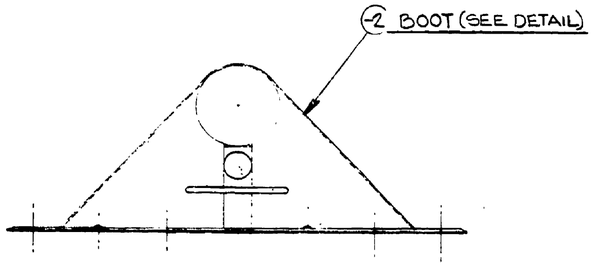

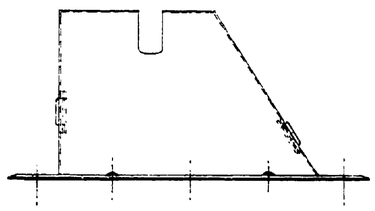

	1	15L	#20-4 SILK FIN. TAN THREAD
83913-8	2	EYELET	DURABLE DOT FASTENER
83913-6	2	STUD	
83913-4	2	SOCKET	
83913-2	2	BUTTON	
	8	3/32 x 3/16	2 S ALUM. BR. HD. RIVET
#13	8	RIVET BURR	
-3	2	.032 x 4 1/2 x 7	24 ST ALUM.
-2	1	10 13/16 x 11 7/8	#3370D-SPL-30 NAUGAHYDE
	NO. REQ.	SIZE	DESCRIPTION
PART No.			MATERIAL

SCALE 6 IN. = 1 FT. & NOTED — TOTAL WT.—LBS.

FINISH—PIPER SPECIFICATION #10

MANUFACTURING PRACTICES—PIPER SPECIFICATION #9

THIS DRAWING IS THE PROPERTY OF THE PIPER AIRCRAFT CORP. AND ITS POSSESSION BY UNAUTHORIZED PERSONS SHALL NOT BE CONSTRUED AS PERMISSION TO REPRODUCE FOR SALE, IN WHOLE OR IN PART, ANY DEVICES SHOWN THEREON

LET.	REVISION	DATE	BY

MODEL	PER PLANE	NEXT ASSEMBLY	SUPERSEDES	SUP. BY
J7A				

PIPER AIRCRAFT CORP.
LOCK HAVEN, PENNA.

BOOT ASSEMBLY—
CONTROL STICK

M.W.G.	H. R. K.		13392
5-8-51	5-14-51		
DRAFTSMAN	CHECKER	STANDARDS	

A782

BUSHING ASSEMBLY MUST BE FREE TO ROTATE ON SHAFT BETWEEN WASHERS.

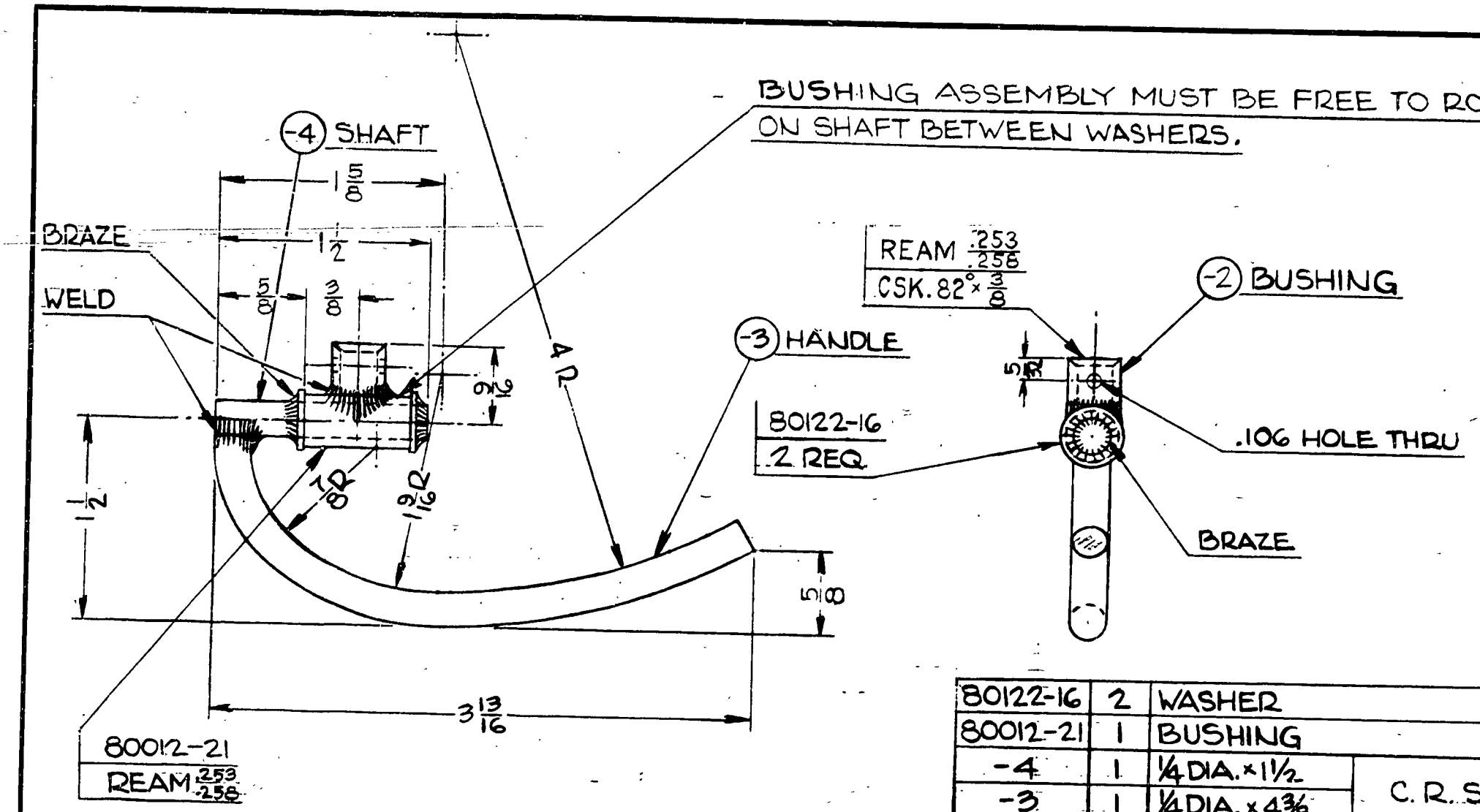

PART No.	No. REQ.	SIZE	MATERIAL / DESCRIPTION
80122-16	2	WASHER	
80012-21	1	BUSHING	
-4	1	1/4 DIA. x 1 1/2	C. R. STEEL
-3	1	1/4 DIA. x 4 3/8	C. R. STEEL
-2	1	3/8 x .065 x 3/8	#1025 STEEL TUBE

SCALE FULL SIZE — TOTAL WT. —LBS.

FINISH—PIPER SPECIFICATION #10

MANUFACTURING PRACTICES—PIPER SPECIFICATION #9

HANDLE ASSEMBLY— OUTSIDE DOOR

LET.	REVISION	DATE	BY

MODEL	PER PLANE	NEXT ASSEMBLY	SUPERSEDES	SUP. BY

THIS DRAWING IS THE PROPERTY OF THE PIPER AIRCRAFT CORP. AND ITS POSSESSION BY UNAUTHORIZED PERSONS SHALL NOT BE CONSTRUED AS PERMISSION TO REPRODUCE FOR SALE, IN WHOLE OR IN PART. ANY DEVICES SHOWN THEREON.

PIPER AIRCRAFT CORP.
LOCK HAVEN, PENNA.

DRAFTSMAN	CHECKER	STANDARDS
M.W.G. 5-9-51	H. R. K. 5-18-51	

13393

A 165

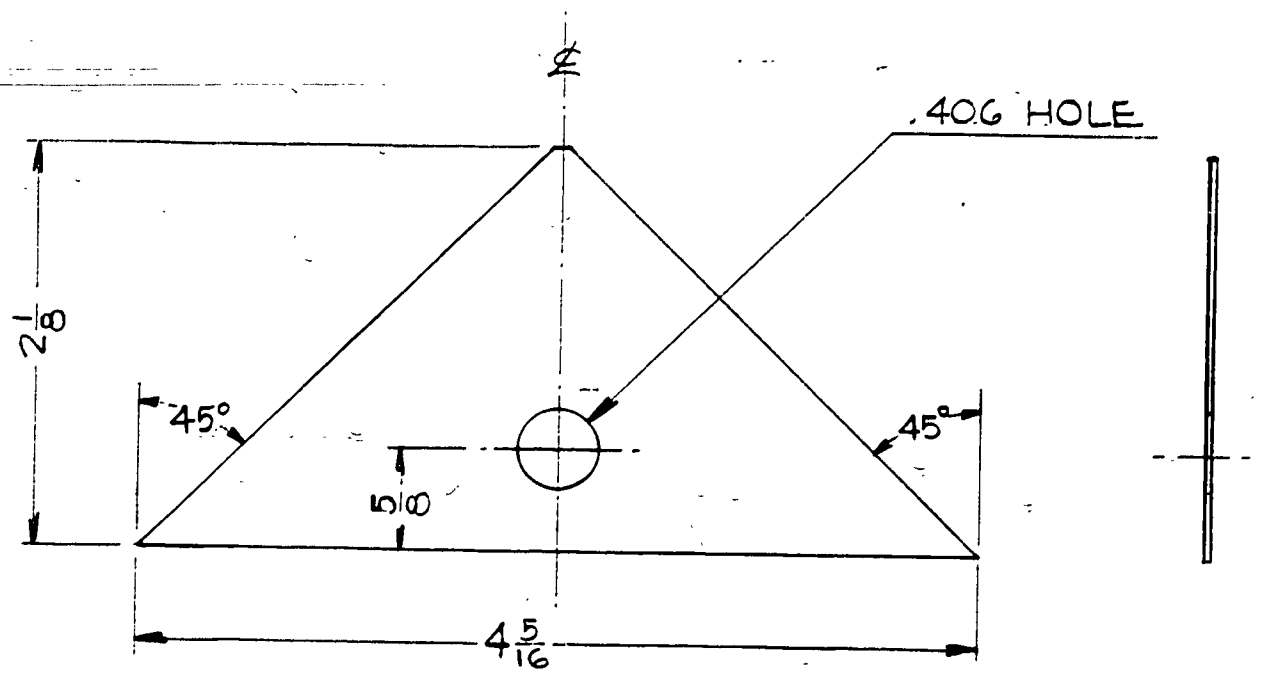

LET.	REVISION	DATE	BY	1-214 MODEL	PER PLANE	NEXT ASSEMBLY	SUPERSEDES	SUP. BY	

THIS DRAWING IS THE PROPERTY OF THE PIPER AIRCRAFT CORP. AND ITS POSSESSION BY UNAUTHORIZED PERSONS SHALL NOT BE CONSTRUED AS PERMISSION TO REPRODUCE FOR SALE, IN WHOLE OR IN PART. ANY DEVICES SHOWN THEREON.

PIPER AIRCRAFT CORP.
LOCK HAVEN, PENNA.

PART No.	No. REQ.	SIZE	MATERIAL
		.032 x 2 1/8 x 4 5/16	1025 STEEL
		SIZE	DESCRIPTION

SCALE FULL SIZE — TOTAL WT.-LBS.

FINISH—PIPER SPECIFICATION #10

MANUFACTURING PRACTICES—PIPER SPECIFICATION #9

PLATE - DOOR HANDLE TRIM

DRAFTSMAN	CHECKER	STANDARDS	
M.W.G. 5-10-51	H. R. K. 5-18-51		13394

166

A-166

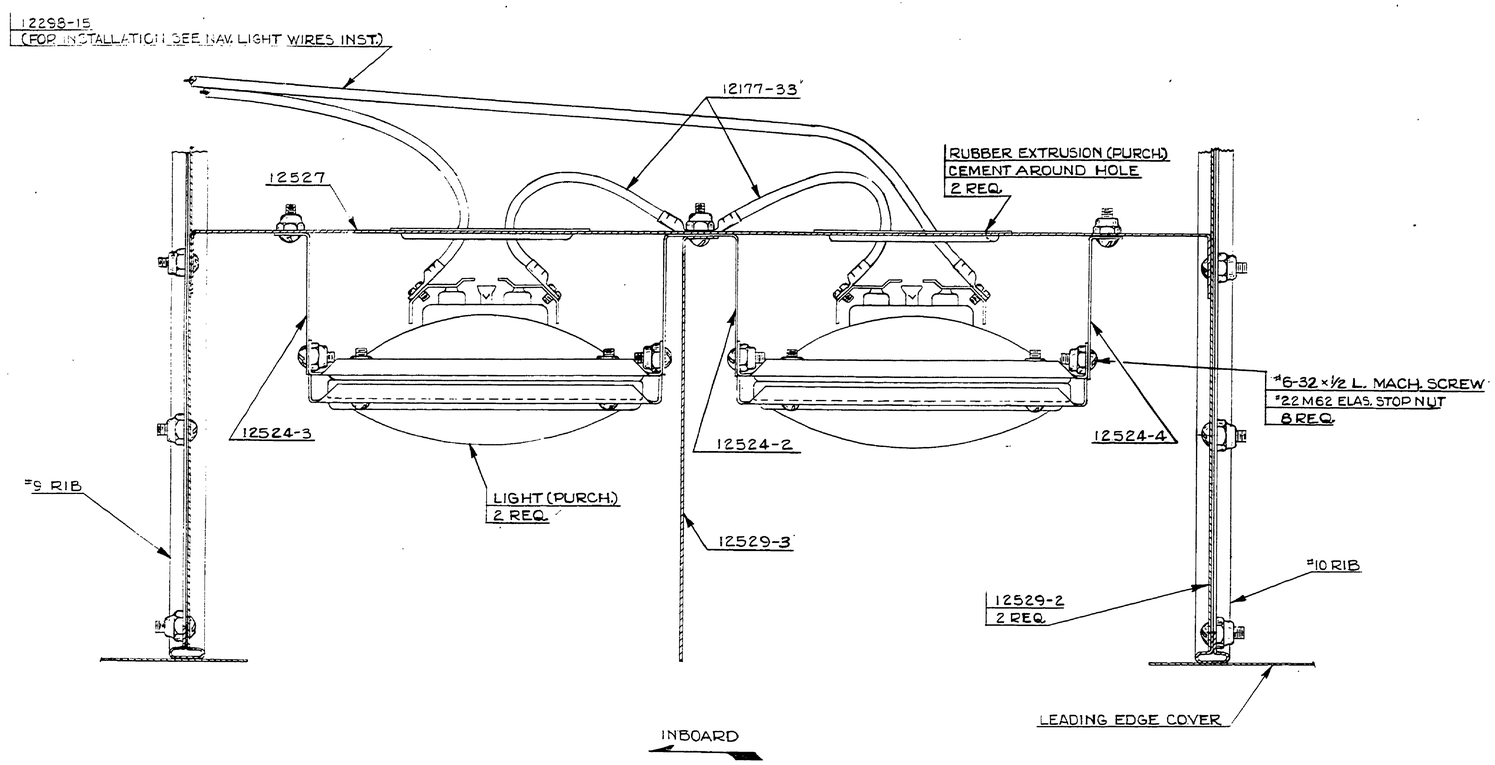

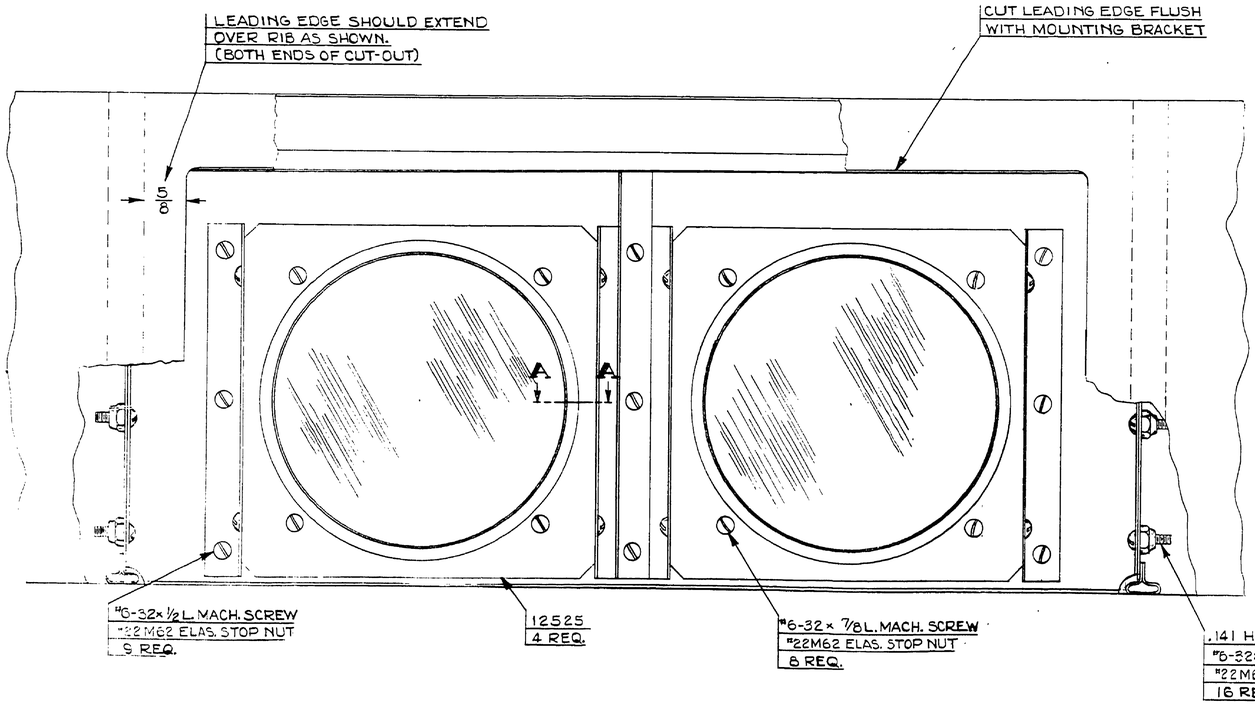

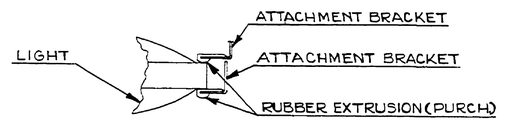

SECTION A-A

	1	72L	RUBBER EXTRUSION DIE #827 PURCH. B.F.GOODRICH CO.
	2	#4509 LIGHT 100W-12V. PURCH. GENERAL ELECTRIC CO.	
	41	#22 M62 ELASTIC STOP NUT	
#6-32	8	7/8L	RD. HD. MACH. SCREW
#6-32	33	1/2L	
2529-3	1		PLATE
12529-2	2		
12527	1		
12525	4		
12524-4	1		BRACKET
12524-3	1		
12524-2	1		
12298-15	1		WIRE HARNESS ASS'Y.
12177-33	2		WIRE ASS'Y.
PART NO.	No. REQ.	SIZE	DESCRIPTION MATERIAL

SCALE FULL SIZE — TOTAL WT.-LBS.

FINISH—PIPER SPECIFICATION #10

MANUFACTURING PRACTICES—PIPER SPECIFICATION #9

LET.	REVISION	DATE	BY

MODEL	PER PLANE	NEXT ASSEMBLY	SUPERSEDES	SUP. BY

THIS DRAWING IS THE PROPERTY OF THE PIPER AIRCRAFT CORP. AND ITS POSSESSION BY UNAUTHORIZED PERSONS SHALL NOT BE CONSTRUED AS PERMISSION TO REPRODUCE FOR SALE, IN WHOLE OR IN PART, ANY DEVICES SHOWN THEREON.

PIPER AIRCRAFT CORP.
LOCK HAVEN, PENNA.

LIGHT INSTALLATION - LANDING

DRAFTSMAN	CHECKER	STANDARDS
I. E. M. 5-14-51	H. R. K. 5-15-51	

13396

P. & F. Co. No. 124

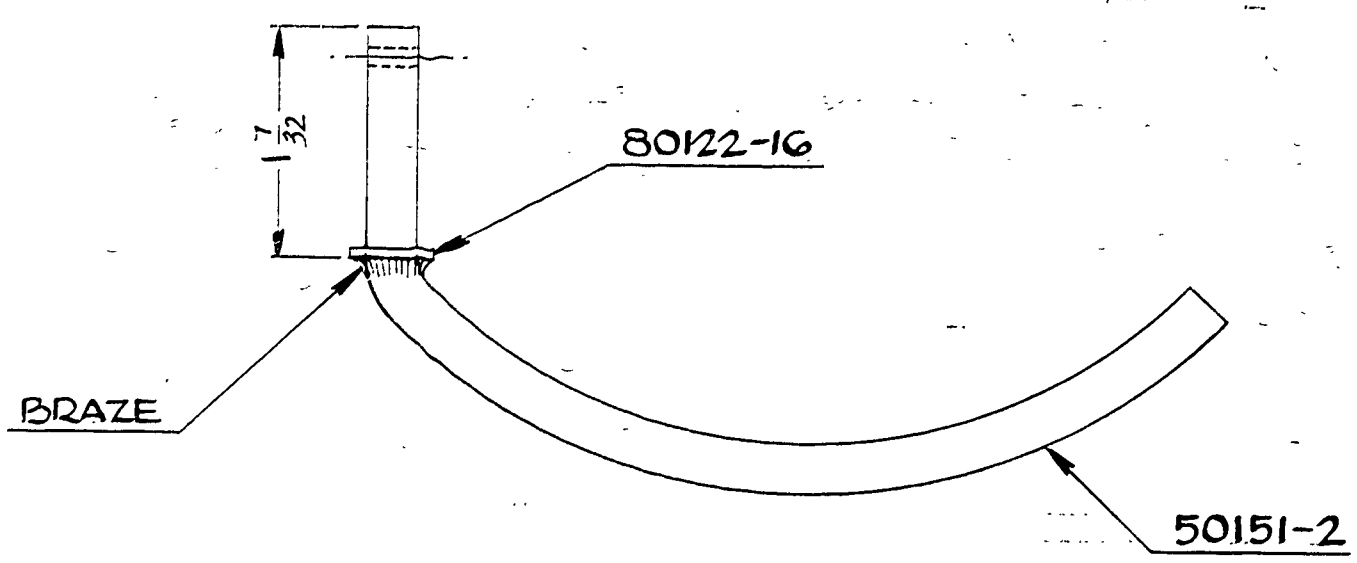

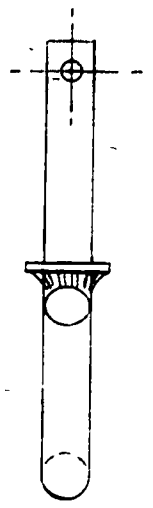

PART NO.	No. REQ.	NAME / MATERIAL
80122-16	1	WASHER
50151-2	1	HANDLE

SCALE FULL SIZE | TOTAL WT.–LBS.

FINISH–PIPER SPECIFICATION #10

MANUFACTURING PRACTICES–PIPER SPECIFICATION #9

HANDLE ASSEMBLY– INSIDE DOOR

LET.	REVISION	DATE	BY

MODEL	PER PLANE	NEXT ASSEMBLY	SUPERSEDES	SUP. BY

THIS DRAWING IS THE PROPERTY OF THE PIPER AIRCRAFT CORP. AND ITS POSSESSION BY UNAUTHORIZED PERSONS SHALL NOT BE CONSTRUED AS PERMISSION TO REPRODUCE FOR SALE, IN WHOLE OR IN PART, ANY DEVICES SHOWN THEREON.

PIPER AIRCRAFT CORP.
LOCK HAVEN, PENNA.

DRAFTSMAN	CHECKER	STANDARDS
M.W.G. 5-10-51		

13397

A167

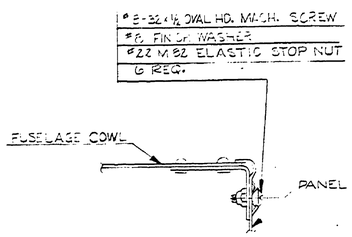

SECTION **A-A**
FULL SIZE

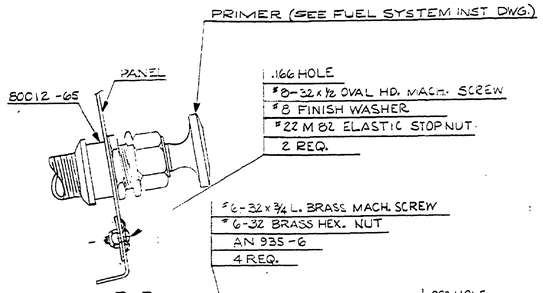

SECTION **B-B**
FULL SIZE

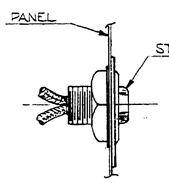

SECTION **C-C**
FULL SIZE

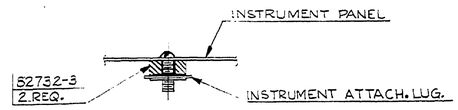

SECTION **D-D**
FULL SIZE

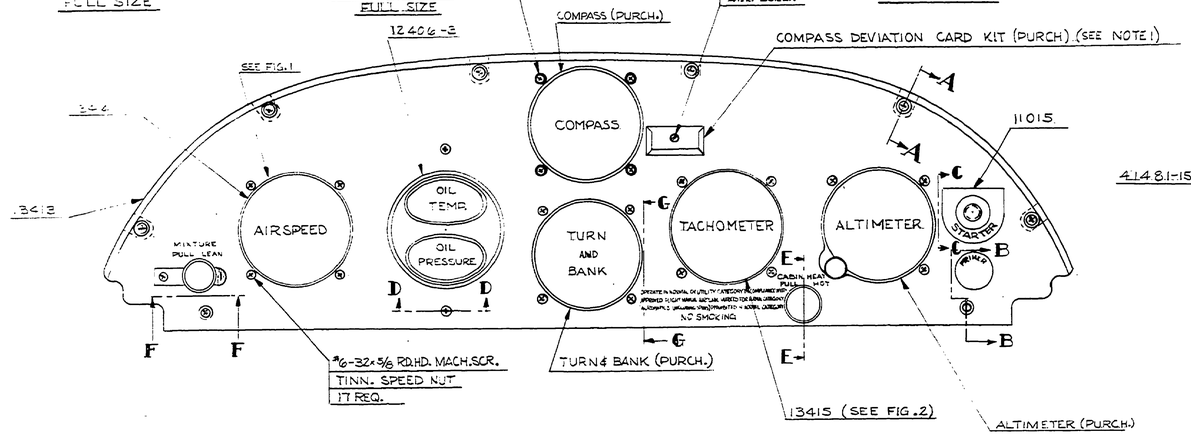

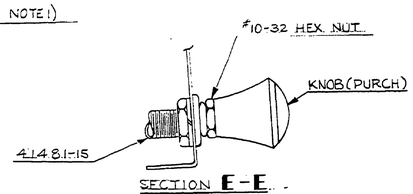

SECTION **E-E**
FULL SIZE

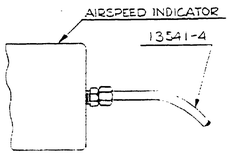

FIG. 1
AIRSPEED LINE ATTACH.

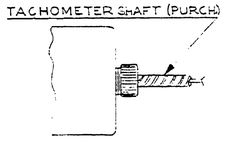

FIG. 2
TACHOMETER SHAFT INST.

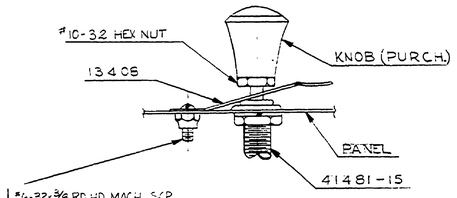

SECTION **F-F**
FULL SIZE

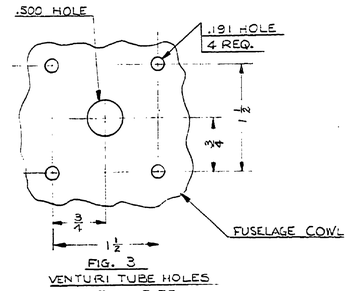

FIG. 3
VENTURI TUBE HOLES
FULL SIZE

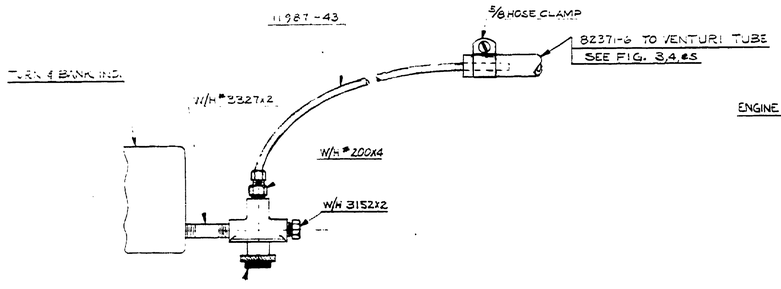

SECTION **G-G**
6 IN. = 1 FT.

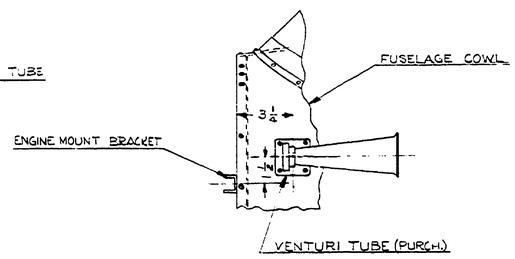

FIG. 4
VENTURI TUBE LOCATION
3 IN. = 1 FT.

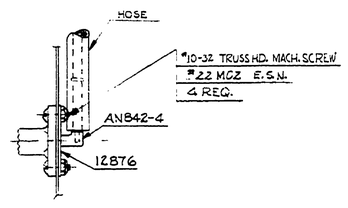

FIG. 5
VENTURI TUBE INST.
6 IN. = 1 FT.

NOTE:

1. COMPASS DEVIATION CARD KIT INCLUDES: COMPASS DEVIATION CARD, CARD HOLDER, CARD COVER.

	1	VENTURI TUBE #10017-2-A	PURCH. ECLIPSE - PIONEER
	17	TINNERMAN NUT #410-M-1	
	1	COMPASS DEVIATION CARD KIT	PUR. AIRPATH INST. CO. (SEE NOTE 1)
#4	1	¼L.	TYPE "A" STOVE HD. R.H. SCREW
	1	23L	TACH. SHAFT #3702Y PURCH. S.S. WHITE DENTAL MFG. CO.
	1	ALTIMETER U.S.A.F. TYPE #G13 (PURCH.)	
	1	TURN & BANK U.S.A.F. TYPE #1119 (PURCH.)	
	1	COMPASS U.S.A.F. TYPE #B-16 (PURCH.)	
	1	STARTER BUTTON #1575-D VIR. BRASS CO.	
	2	KNOB #3004-S	PUR. HARTFORD MOULDING CO.
	1	5/8 HOSE CLAMP	
	1	W/H #3327x2	NIPPLE
	1	W/H #3152x2	PLUG
	1	W/H #2004	INVERTED MALE CONNECTOR
AN5829-2	1	VALVE	
AN735-6	4	LOCK WASHER	
AN842-4	1	ELBOW	
#8	8	FINISH WASHER	
	4	#10 M82	
	8	#10 M82	ELASTIC STOP NUT
	1	#10 M82	
#10-32	2	HEX NUT	
#8-32	4	BRASS HEX. NUT	
#10-32	4	½L.	TRUSS HD. MACH. SCREW
#8-32	2	½L.	OVAL HD. MACH. SCREW
#6-32	4	¾L.	BRASS R.H. MACH. SCREW
#6-32	17	⅜L.	R.H. MIN. MACH. SCREW
#4-32	1	⅜L.	
82732-3	2	BUSHING	
82371-6	1	HOSE	
80012-65	1	BUSHING	
41481-15	2	CABLE ASSY.	
13541-4	1	AIR SPEED TUBE	
345	1	TACHOMETER ASSY.	
13414	1	AIRSPEED INDICATOR ASSY.	
13413	1	PANEL	
13406	1	PLATE	
12876	1	PLATE	
12406-3	1	OIL TEMP & OIL PRESS. GAGE ASSY.	
11987-43	1	TUBE ASSY.	
1015	1	PLACARD	
PART NO.	NO. REQ.	SIZE	DESCRIPTION / MATERIAL

SCALE 6 IN. = 1 FT & NOTED | TOTAL WT.-LBS.
FINISH—PIPER SPECIFICATION #10
MANUFACTURING PRACTICES—PIPER SPECIFICATION #8

LET.	REVISION	DATE	BY
A	REDRAWN & REVISED	10-5-51	C.B.

MODEL | PER PLANE | NEXT ASSEMBLY | SUPERSEDES | SUP. BY

THIS DRAWING IS THE PROPERTY OF THE PIPER AIRCRAFT CORP. AND ITS POSSESSION BY UNAUTHORIZED PERSONS SHALL NOT BE CONSTRUED AS PERMISSION TO REPRODUCE FOR SALE IN WHOLE OR IN PART. ANY DEVICES SHOWN THEREON.

PIPER AIRCRAFT CORP.
LOCK HAVEN, PENNA.

PANEL INSTALLATION-INSTRUMENT

DRAFTSMAN	CHECKER	STANDARDS
C.E.B. 7-26-51	C.E.K. 7-24-51	

13398

P. B. P. Co. No. 134

A874

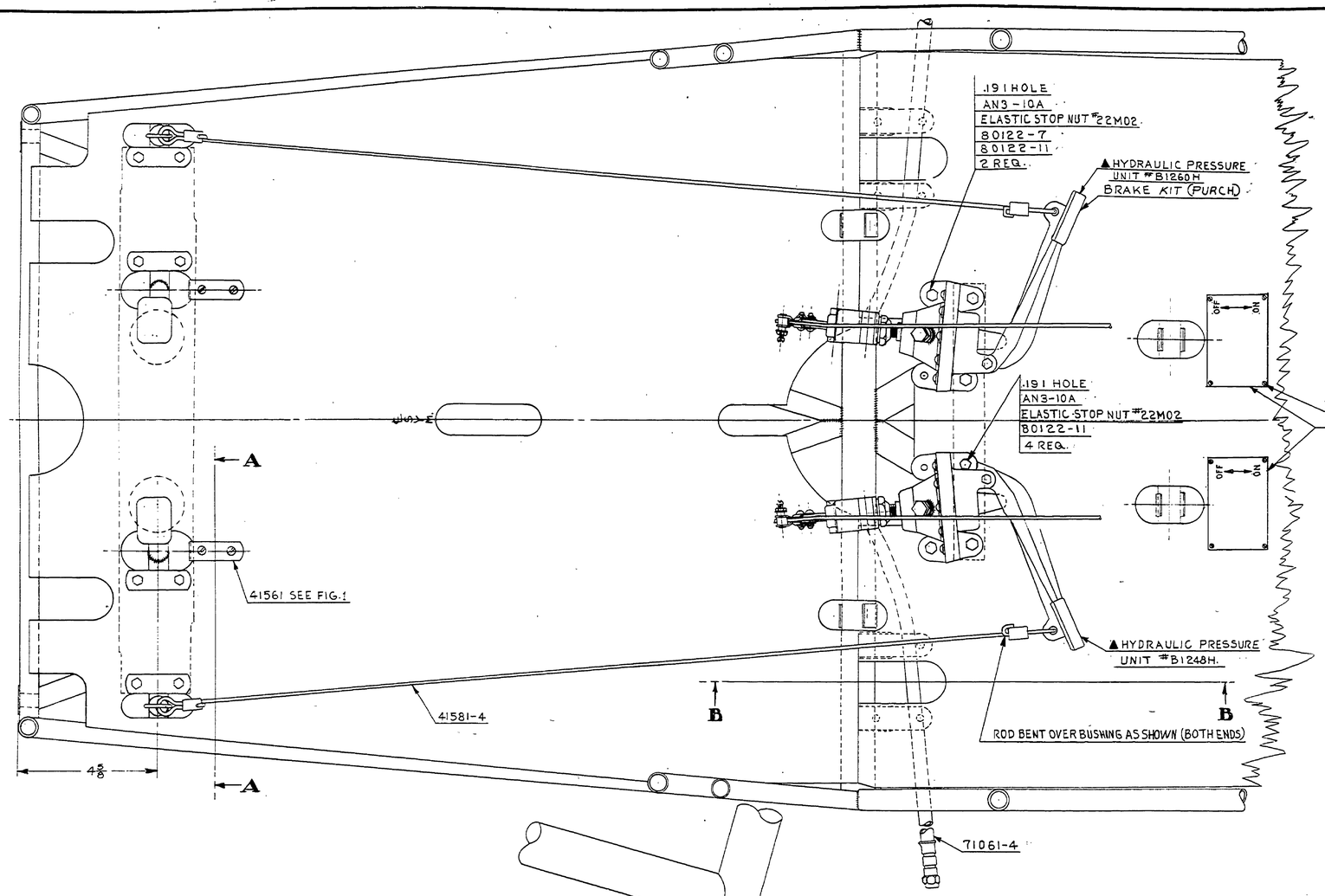

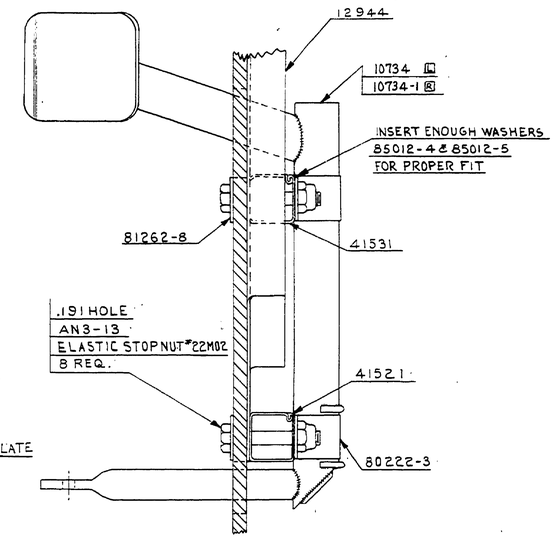

SECTION **A-A**
FULL SIZE

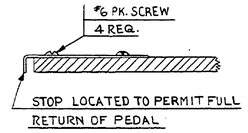

FIGURE 1
FULL SIZE

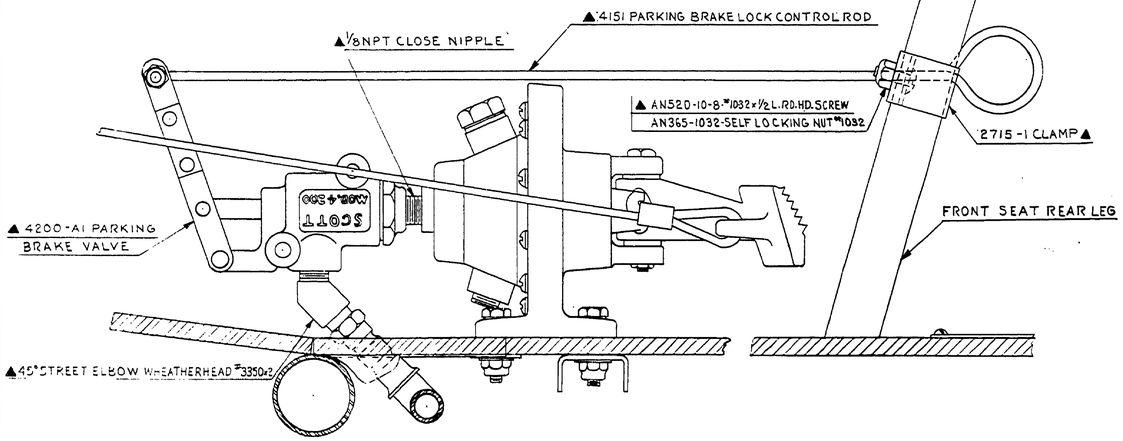

SECTION **B-B**
FULL SIZE

NOTES:
1. PARTS MARKED L USED ON LEFT INST. ONLY.
PARTS MARKED R USED ON RIGHT INST. ONLY.
2. USE UNIVIS 40 BRAKE FLUID FOR ALL OPERATING TEMPERATURES, CAPACITY 70CC PER AIRPLANE.
3. PARTS MARKED ▲ ARE INCLUDED IN BRAKE UNIT KIT #2715-A.

PART NO.	No. REQ.	SIZE / DESCRIPTION / MATERIAL
	1	BRAKE UNIT KIT #2715-A PURCH. SCOTT AVIATION CORP.
	14	ELASTIC STOP NUT #22M02
#6	4	5/8 LONG TYPE A STOVE HD. P.K. SCREW
AN3-13	8	BOLT
AN3-10A	6	
85012-5	SEE NOTE	WASHER
85012-4		
81262-8	4	LINK
80122-11	6	WASHER
80122-7	2	WASHER
80222-3	4	CLAMP
71061-4	2	HOSE ASSY.
41581-4	2	PEDAL TIE ROD
41561	2	PEDAL STOP
41531	2	PEDAL BLOCK (INBOARD)
41521	2	PEDAL BLOCK (OUTBOARD)
12944	1	FLOORBOARD REINF. CHANNEL
10734-1	1	RIGHT BRAKE PEDAL ASSY.
10734	1	LEFT BRAKE PEDAL ASSY.

SCALE 6 IN. = 1 FT. & NOTED — TOTAL WT.—LBS.
FINISH—PIPER SPECIFICATION #10
MANUFACTURING PRACTICES—PIPER SPECIFICATION #8

MODEL	PER PLANE	NEXT ASSEMBLY	SUPERSEDES	SUP. BY

THIS DRAWING IS THE PROPERTY OF THE PIPER AIRCRAFT CORP. AND ITS POSSESSION BY UNAUTHORIZED PERSONS SHALL NOT BE CONSTRUED AS PERMISSION TO REPRODUCE FOR SALE, IN WHOLE OR IN PART, ANY DEVICES SHOWN THEREON.

LET.	REVISION	DATE	BY

PIPER AIRCRAFT CORP.
LOCK HAVEN, PENNA.

BRAKE INSTALLATION

DRAFTSMAN	CHECKER	STANDARDS
I.M.M. 5-14-51	H.R.K. 5-16-51	

13399

P. & P. Co. No. 124

A875

AREAS

WING (TOTAL)	178.50 SQ.FT.
WING (EACH WING - INCLUDING AILERON & FLAP)	89.25 SQ.FT.
AILERON (TOTAL)	18.80 SQ.FT.
AILERON (PER AILERON)	9.40 SQ.FT.
FLAP (TOTAL)	11.5 SQ.FT.
FLAP (PER FLAP)	5.75 SQ.FT.
STABILIZER (TOTAL)	15.90 SQ.FT.
STABILIZER (PER STABILIZER)	7.95 SQ.FT.
ELEVATOR (TOTAL)	14.10 SQ.FT.
ELEVATOR (PER ELEVATOR)	7.05 SQ.FT.
VERTICAL TAIL (TOTAL)	11.42 SQ.FT.
FIN (TOTAL)	4.66 SQ.FT.
RUDDER (TOTAL)	6.76 SQ.FT.

ANGULAR MOVEMENTS OF CONTROL SURFACES

AILERON:	18° ± 2° UP	18° ± 2° DOWN
FLAP	0° UP	50° ± 2° DOWN
STABILIZER	2½° ± ½° UP	4° ± ½° DOWN
ELEVATOR	25° ± 2° UP	15° ± 2° DOWN
RUDDER	20° ± 2° RIGHT	20° ± 2° LEFT

NOTES:

1. ELEVATOR TRAVEL IS RELATIVE TO HORIZONTAL REFERENCE LINE.
2. AILERON TRAVEL IS RELATIVE TO TRAILING EDGE OF WING.
3. RUDDER TRAVEL IS RELATIVE TO ℄ OF AIRPLANE.
4. STABILIZER TRAVEL IS RELATIVE TO HORIZONTAL REFERENCE LINE.
5. FLAP TRAVEL IS RELATIVE TO TRAILING EDGE OF WING.

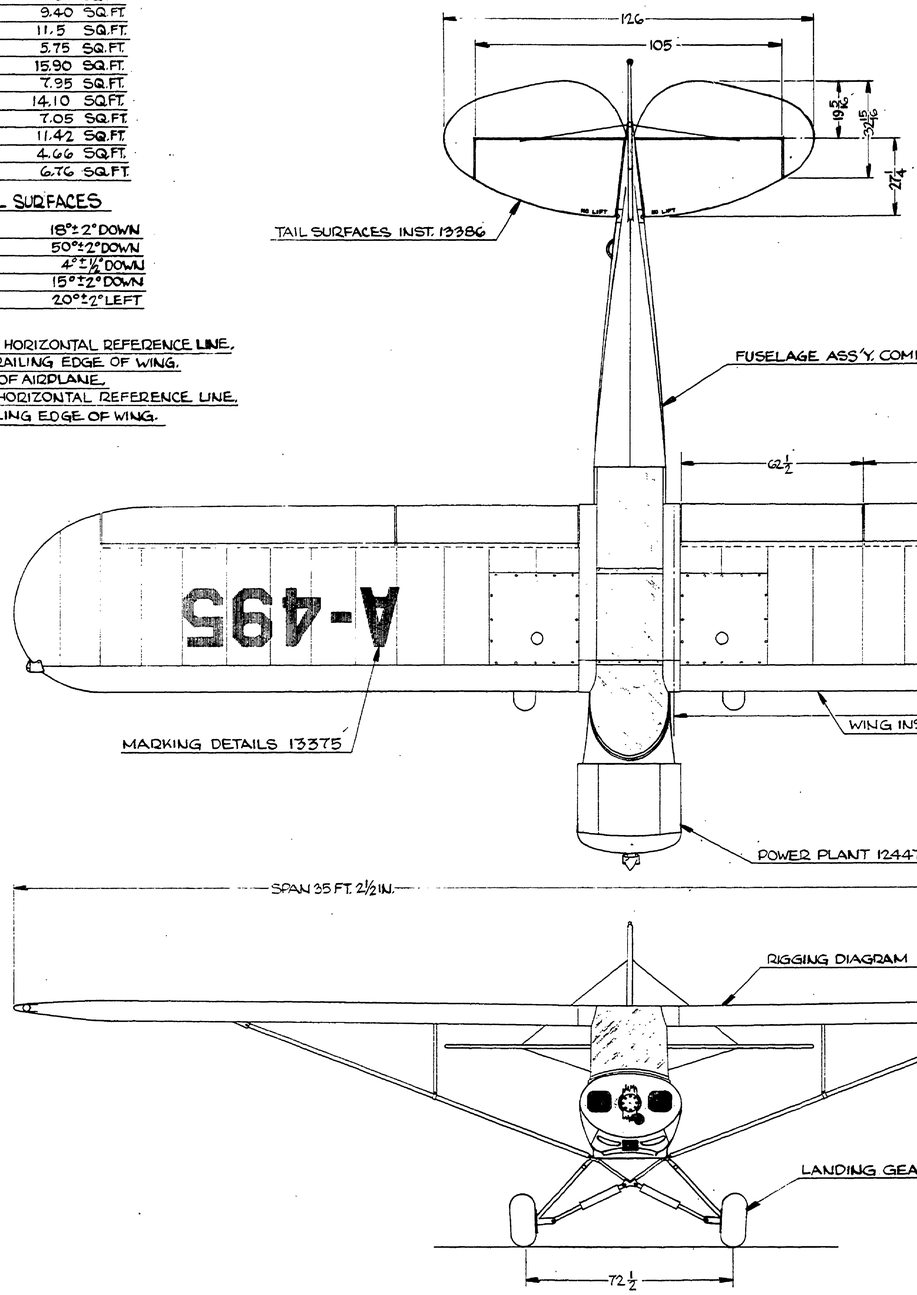

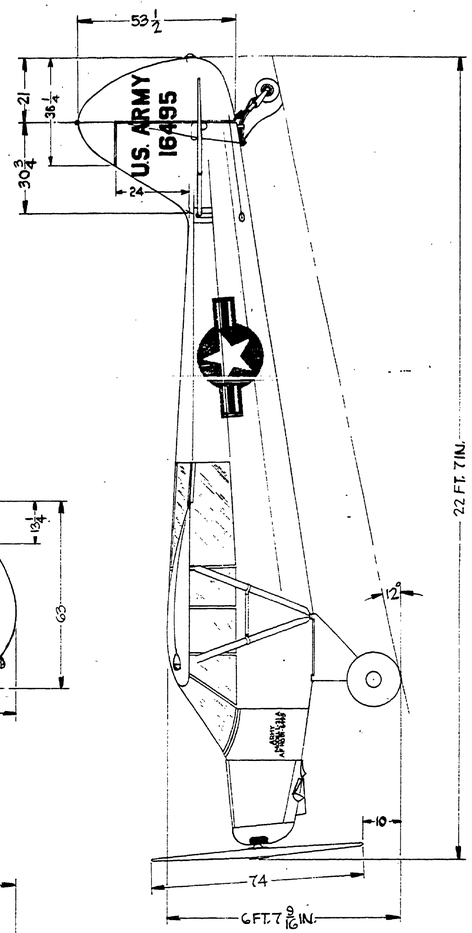

13388	1	FUSELAGE ASS'Y COMPLETE
13387	1	WING INST.
12447	1	POWER PLANT
13375	REF	MARKING DETAILS
13386	1	TAIL SURFACES INST.
13389	REF	RIGGING DIAGRAM
13385	1	LANDING GEAR INST.

PART NO.	NO. REQ.	NAME / MATERIAL
SCALE ½ IN. = 1 FT.		TOTAL WT.—LBS.
FINISH—PIPER SPECIFICATION #10		
MANUFACTURING PRACTICES—PIPER SPECIFICATION #8		

LET.	REVISION	DATE	BY

MODEL	PER PLANE	NEXT ASSEMBLY	SUPERSEDES	SUP. BY

THIS DRAWING IS THE PROPERTY OF THE PIPER AIRCRAFT CORP. AND ITS POSSESSION BY UNAUTHORIZED PERSONS SHALL NOT BE CONSTRUED AS PERMISSION TO REPRODUCE FOR SALE, IN WHOLE OR IN PART, ANY DEVICES SHOWN THEREON.

PIPER AIRCRAFT CORP.
LOCK HAVEN, PENNA.

L-21A COMPLETE AIRPLANE

DRAFTSMAN	CHECKER	STANDARDS
M.W.G. 5-4-51	H. R. K. 5-11-51	

13400

P. B. P. Co. No. 134

A876

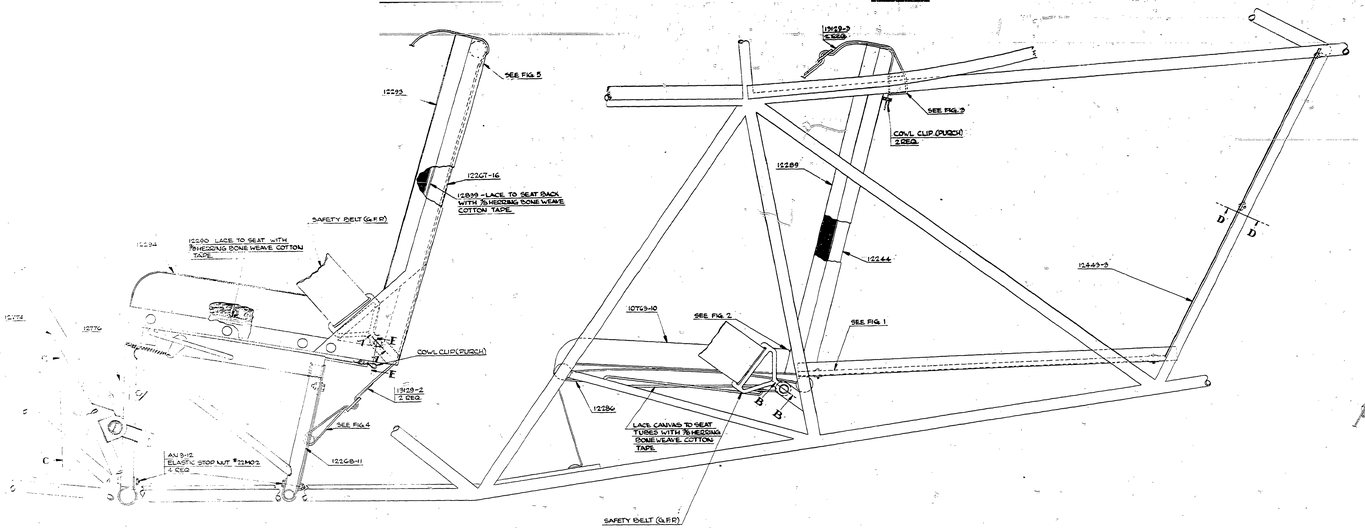

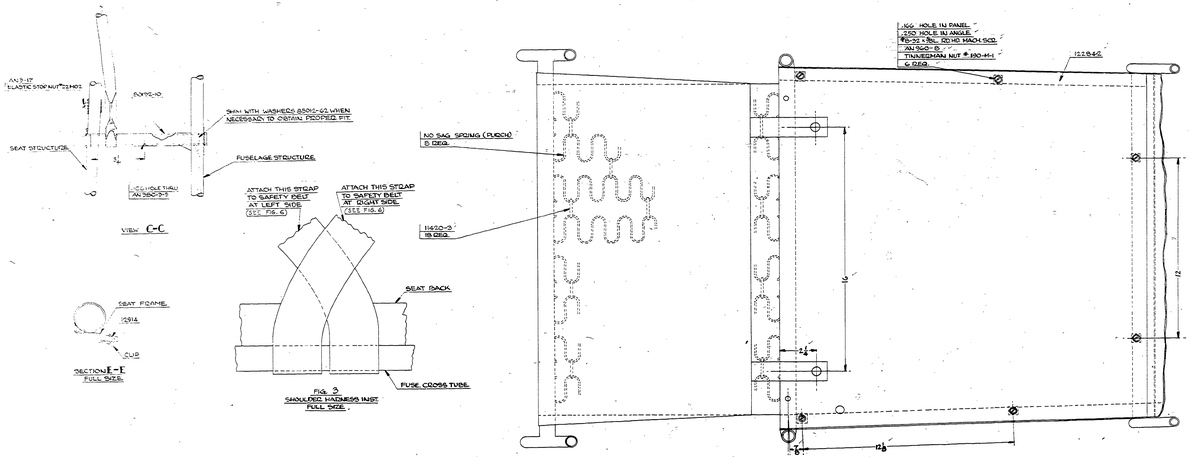

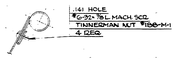

SECTION D-D
FULL SIZE.

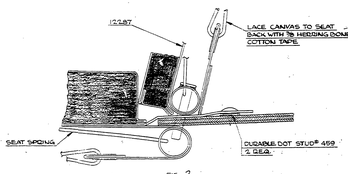

FIG. 2
DEAD SEAT BACK ATTACHMENT

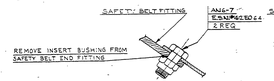

SECTION B-B
FULL SIZE.



SECTION A-A
FULL SIZE.

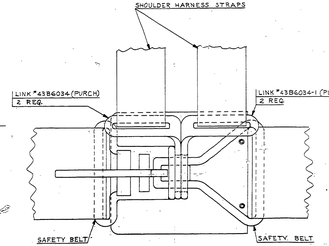

FIG. 6
SHOULDER HARNESS TO SAFETY BELT INST.
FULL SIZE

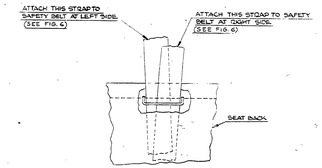

FIG. 5
SHOULDER HARNESS INST.
O.N.-1 PT.

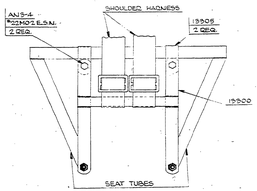

FIG. 4
SHOULDER HARNESS INSTALLATION
O.N.-1 PT.

B13

	1	LINCOLN, NEBR.	MATERIAL
	2	LANCASTER, PA.	MACHINE TOOL CORP.
AN3-4	2	BOLT	
	2	SAFETY BELT ANTI-MISHAP	
	2	COWL CLIP #22 PUSH, AIR ASSOCIATES	
	6	DURABLE DOT STUD # 499	
	6	NGA-1932	NO SAG SPRING (PUSH) MS21044-N08 HEDGEHOG SOCKET END
	1	1943-1951	COTTON TAPE
	4		THINNERMAN NUT # 420-416
	2		PLATE NUT # 21402
#6-32	4	SCR	FIL HD MACH SCR
MS-35	6	WSHR	
AN960-10		WASHER	
AN3502-3		SCR	
AN3-17		NUT	
AN6-7		FITTING	
AN3-12		NUT	
MS21042-08		NUT PL	
50192-10	1	TUBE	
13505	4	SHOULDER HARNESS CLAMP	
13300	1	SEAT BACK ASSY	
12329-2	2	COWL CLIP ASSY	
12329-3	2	COWL CLIP ASSY	
12316	1	SEAT FRAME PIN	
12839	1	CANVAS ASSY	
12276	1	SEAT BACK FRAME ASSY	
12274	1	SEAT CONTROL LEVER ASSY	
12296	1	CUSHION ASSY	
12293			
12280	1	CANVAS ASSY	
12269	1	CUSHION ASSY	
12287	1	CANVAS ASSY	
12286			
12443-3	1	PANEL	
12284-2			
12268-11	1	FRONT SEAT LEG ASSY	
12267-16	1	FRONT SEAT FRAME ASSY	
12244	1	REAR SEAT TRACK ASSY	
11450-3	16	LINK	
10763-10	1	CHANNEL ASSY	
DASH NO.		REVISION	DATE APPROVED

PIPER AIRCRAFT CORP.
LOCK HAVEN, PENNA.

SEATS INSTALLATION

13402

.166 HOLE
*8-32×1½L. RD. HD. MACH. SCREW
*22M82 ELASTIC STOP NUT
AN 960-10
2 REQ.

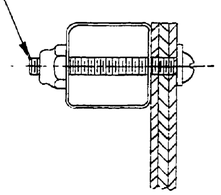

SECTION **A-A**
FULL SIZE

.191 HOLE
*10-32×¾L. FL. HD. MACH. SCREW
*22M02 ELASTIC STOP NUT
2 REQ.

82161-2
2 REQ.

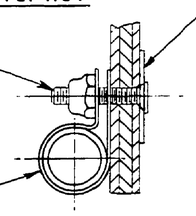

80032-52
2 REQ.

SECTION **B-B**
FULL SIZE

*4 P.K. SCREW
2 REQ.

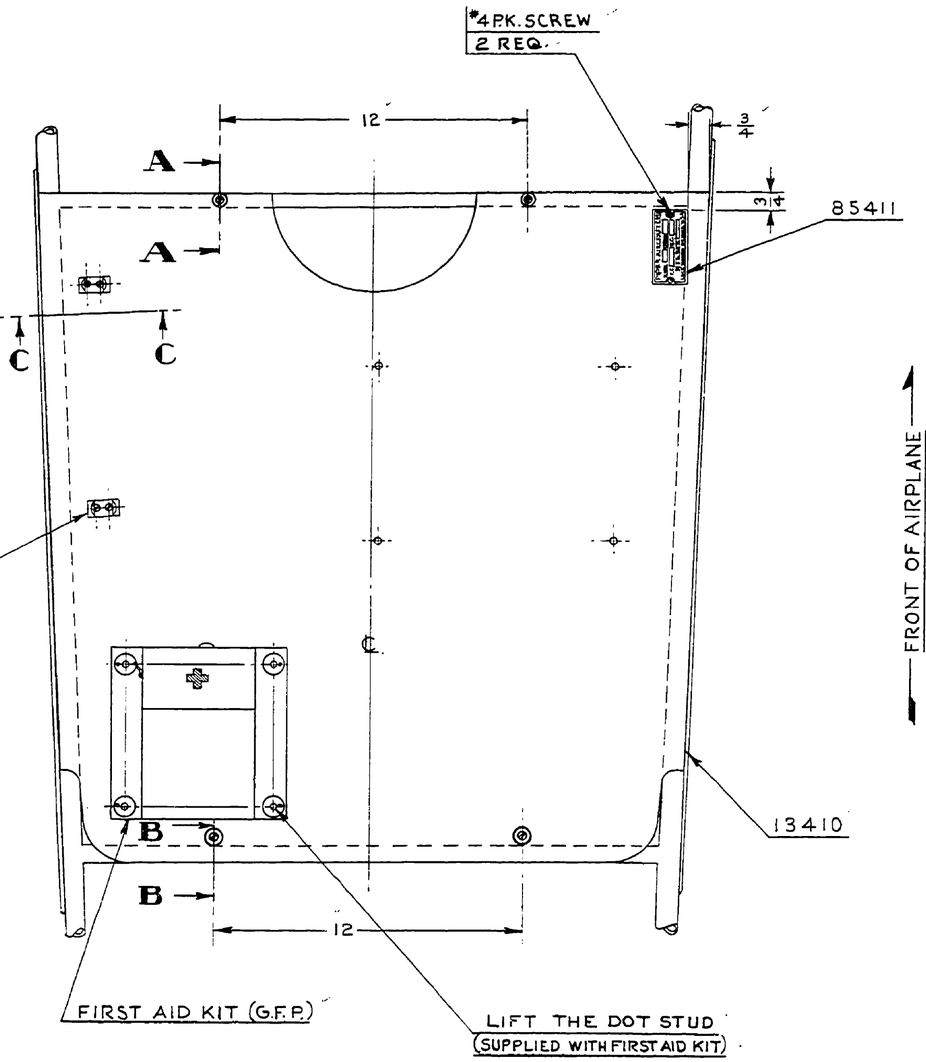

#6-32×⅝ RD. HD. MACH. SCREW
#22M62 ELASTIC STOP NUT
AN960-6
4 REQ.

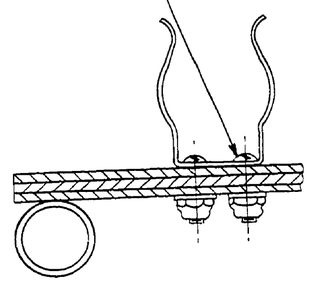

SECTION **C—C**
FULL SIZE

	1	FIRST AID KIT #42D7411 (G.F.P.)	
#4	2	¼L	TYPE "A" STOVE HD. P.K. SCREW
	2	#22M82	ELASTIC STOP NUT
	4	#22M62	
	2	#22M02	
#10-32	2	¾L.	FL. HD. MACH. SCREW
#8-32	2	1½L.	RD. HD. MACH. SCREW
#6-32	4	⅝L.	
AN960-10	2	WASHER	
AN960-6	4		
85411	1	SERIAL NUMBER PLACARD	
82161-2	2	WASHER	
80032-52	2	CLAMP	
13410	1	DECK	
11882	2	CONTROL STICK HOLDER	
PART No.	NO. REQ.	SIZE	DESCRIPTION / MATERIAL

SCALE 3 IN. = 1 FT. & NOTED | TOTAL WT.—LBS.
FINISH—PIPER SPECIFICATION #10
MANUFACTURING PRACTICES—PIPER SPECIFICATION #9

THIS DRAWING IS THE PROPERTY OF THE PIPER AIRCRAFT CORP. AND ITS POSSESSION BY UNAUTHORIZED PERSONS SHALL NOT BE CONSTRUED AS PERMISSION TO REPRODUCE FOR SALE, IN WHOLE OR IN PART, ANY DEVICES SHOWN THEREON

LET.	REVISION	DATE	BY

MODEL	PER PLANE	NEXT ASSEMBLY	SUPERSEDES	SUP. BY

PIPER AIRCRAFT CORP.
LOCK HAVEN, PENNA.

DECK INSTALLATION

I.M.M.	H. R. K.		
5-15-51	5-17-51		
DRAFTSMAN	CHECKER	STANDARDS	13403

783

A783

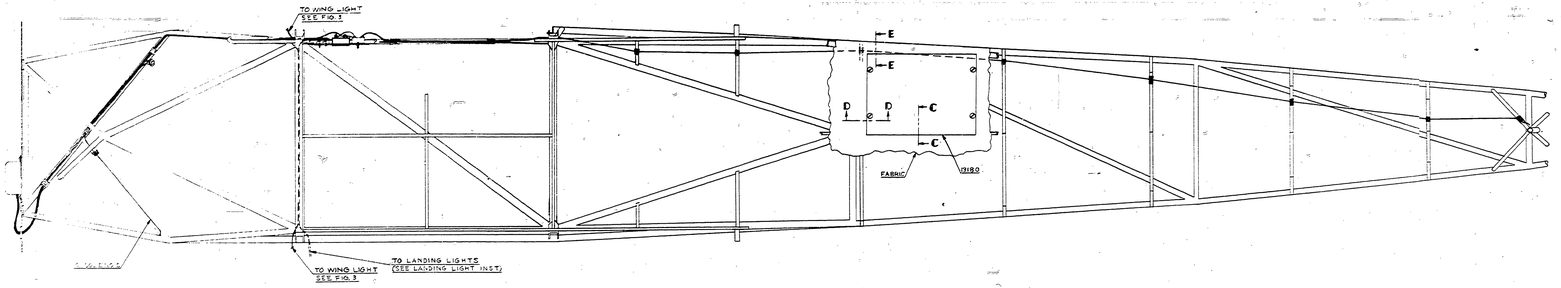

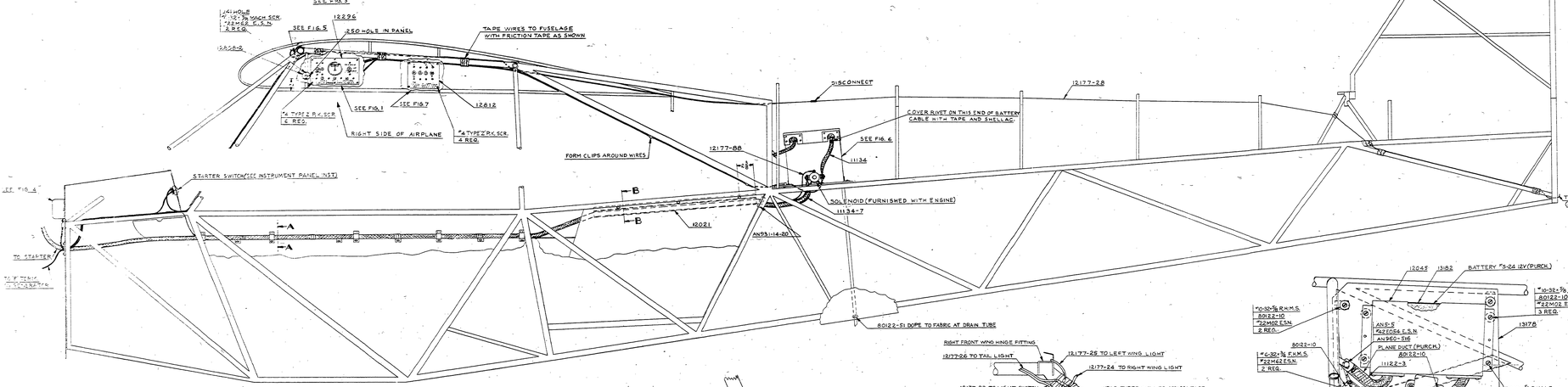

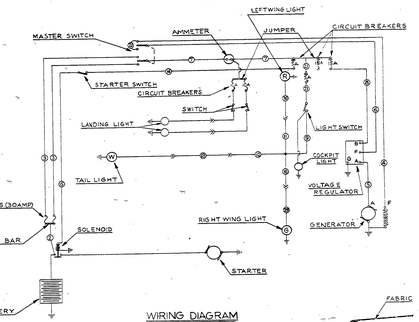

WIRING DIAGRAM

FIG. 6
BATTERY BOX INST.
6 IN. = 1 FT.

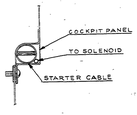

SECTION A-A
FULL SIZE

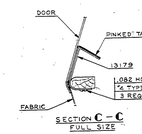

SECTION C-C
FULL SIZE

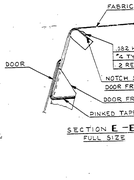

SECTION E-E
FULL SIZE

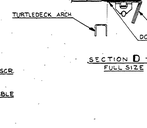

SECTION D-D
FULL SIZE

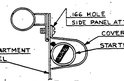

SECTION B-B
FULL SIZE

NOTE:
WRAP WIRES WITH FRICTION TAPE & SHELLAC WHERE CONTACTING SHARP EDGES OF ADJACENT STRUCTURE.

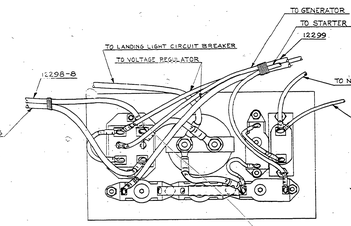

FIG. 1
SWITCH PANEL WIRING DETAIL
FULL SIZE

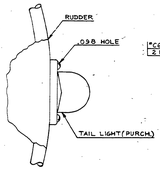

FIG. 2
TAIL LIGHT INST.
FULL SIZE

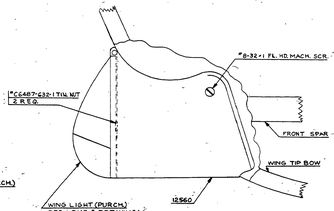

FIG. 3
WING LIGHT INST.
FULL SIZE

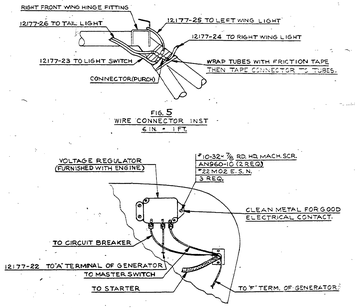

FIG. 5
WIRE CONNECTOR INST
6 IN. = 1 FT.

FIG. 4
VOLTAGE REGULATOR INST.
3 IN. = 1 FT.

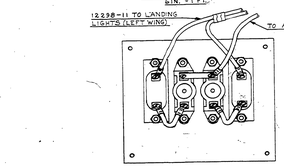

FIG. 7
SWITCH PANEL WIRING DETAIL
FULL SIZE

	1	CLEVIS 1/4" DIA. 1/4" FORK	
	1	1/4-20 FT. FRICTION TAPE	
	1	3/16-3-16 PLANE DUCT TYPE "H" PURCH. CRAMER ELEC. CO.	
	3	7.5 AMP FUSE (PURCH.)	
	1	CONNECTOR 7-5176 PURCH. AIRCRAFT MARINE PRODUCTS	
	1	WING LIGHT INSTL. WITH RED LENS	PURCH. GRIMES MFG. CO.
	1	WING LIGHT INSTL. WITH GR. LENS	
	1	BATTERY 6-24 12V PURCH.	
	1	READING STORAGE BATTERY CL.	
	A	*CC6487-632-1 TINN. NUT	
	1	*CC6537-1	
	A	*22MO2 ELASTIC STOP NUT	
	A	*22MH2	
*4	10	4-32 TYPE Z R.H. HD. R.K. SCR.	
*4	8	4-32 TYPE A "A" TYP. MACH. SCR.	
*6-32	2	6-32	SCR.
*6-32	2	6-32	
*6-32	3	6-32	
*8-32	3	8-32	RD. HD. MACH. SCR.
*8-32	6	8-32	
AN960-10	8	WASHER	
AN970-10	1	GROMMET	
AN3-5	1	BOLT	
30799-10	1	SLEEVE	
80122-51	1	WASHER	
80122-10	7		
13182	1	BATTERY BOX INST.	
3189	1	DOOR ASSY.	
13179	1	DOOR FRAME ASSY.	
13178	1	BATTERY MOUNTING BOARD	
12898-2	1	COCKPIT LIGHT ASSY.	
12812	1	PANEL ASSY.	
13560	2	LIGHT REST ASSY.	
12295	1		
11350-1	1	WIRE HARNESS ASSY.	
12298-B	1		
11236	1	SWITCH PANEL ASSY.	
12177-88	1		
12177-28	1		
12177-26	1		
12177-23	1	WIRE ASSY.	
12177-24	1		
12177-22	1		
12177-17	1		
12045	1	BATTERY BOX LID ASSY.	
12021	1	GUARD	
13198	1	FUSE BLOCK ASSY.	
11134-7	1	CABLE ASSY.	
11134	1	CABLE ASSY.	
11182-3	1	CABLE ASSY.	
10438	1	JUMPER	

NO.	DESCRIPTION
1	ADDED PART NO. 12177-88
2	ADDED PART NO. 12177-17
3	ADDED PART NO. 12177-28
4	ADDED PART NO. 12177-26
5	ADDED PART NO. 12177-24
6	ADDED PART NO. 12177-23
7	ADDED PART NO. 12177-22
8	ADDED PART NO. 12177-88
9	ADDED PART NO. 12177-17
10	ADDED PART NO. 12177-28
11	ADDED PART NO. 12177-26
12	ADDED PART NO. 12177-24
13	ADDED PART NO. 12177-23
14	ADDED PART NO. 12177-22
15	ADDED PART NO. 12177-88
16	ADDED PART NO. 12177-17
17	ADDED PART NO. 12177-28
18	ADDED PART NO. 12177-26
19	ADDED PART NO. 12177-24
20	ADDED PART NO. 12177-23
21	ADDED PART NO. 12177-22
22	ADDED PART NO. 12177-88
23	ADDED PART NO. 12177-17
24	ADDED PART NO. 12177-28
25	ADDED PART NO. 12177-26
26	ADDED PART NO. 12177-24
27	ADDED PART NO. 12177-23
28	ADDED PART NO. 12177-22
29	ADDED PART NO. 12177-88
30	ADDED PART NO. 12177-17
31	ADDED PART NO. 12177-28
32	ADDED PART NO. 12177-26
33	ADDED PART NO. 12177-24
34	ADDED PART NO. 12177-23
35	ADDED PART NO. 12177-22
36	ADDED PART NO. 12177-88
37	ADDED PART NO. 12177-17
38	ADDED PART NO. 12177-28
39	ADDED PART NO. 12177-26
40	ADDED PART NO. 12177-24
41	ADDED PART NO. 12177-23
42	ADDED PART NO. 12177-22
43	ADDED PART NO. 12177-88
44	ADDED PART NO. 12177-17
45	ADDED PART NO. 12177-28
46	ADDED PART NO. 12177-26
47	ADDED PART NO. 12177-24
48	ADDED PART NO. 12177-23
49	ADDED PART NO. 12177-22
50	ADDED PART NO. 12177-88
51	ADDED PART NO. 12177-17
52	ADDED PART NO. 12177-28
53	ADDED PART NO. 12177-26
54	ADDED PART NO. 12177-24
55	ADDED PART NO. 12177-23
56	ADDED PART NO. 12177-22
57	ADDED PART NO. 12177-88
58	ADDED PART NO. 12177-17
59	ADDED PART NO. 12177-28
60	ADDED PART NO. 12177-26
61	ADDED PART NO. 12177-24
62	ADDED PART NO. 12177-23
63	ADDED PART NO. 12177-22
64	ADDED PART NO. 12177-88
65	ADDED PART NO. 12177-17
66	ADDED PART NO. 12177-28
67	ADDED PART NO. 12177-26
68	ADDED PART NO. 12177-24
69	ADDED PART NO. 12177-23
70	ADDED PART NO. 12177-22
71	ADDED PART NO. 12177-88
72	ADDED PART NO. 12177-17
73	ADDED PART NO. 12177-28
74	ADDED PART NO. 12177-26
75	ADDED PART NO. 12177-24
76	ADDED PART NO. 12177-23
77	ADDED PART NO. 12177-22
78	ADDED PART NO. 12177-88
79	ADDED PART NO. 12177-17
80	ADDED PART NO. 12177-28
81	ADDED PART NO. 12177-26
82	ADDED PART NO. 12177-24
83	ADDED PART NO. 12177-23
84	ADDED PART NO. 12177-22
85	ADDED PART NO. 12177-88
86	ADDED PART NO. 12177-17
87	ADDED PART NO. 12177-28
88	ADDED PART NO. 12177-26
89	ADDED PART NO. 12177-24
90	ADDED PART NO. 12177-23
91	ADDED PART NO. 12177-22
92	ADDED PART NO. 12177-88
93	ADDED PART NO. 12177-17
94	ADDED PART NO. 12177-28
95	ADDED PART NO. 12177-26
96	ADDED PART NO. 12177-24
97	ADDED PART NO. 12177-23
98	ADDED PART NO. 12177-22
99	ADDED PART NO. 12177-88
100	ADDED PART NO. 12177-17

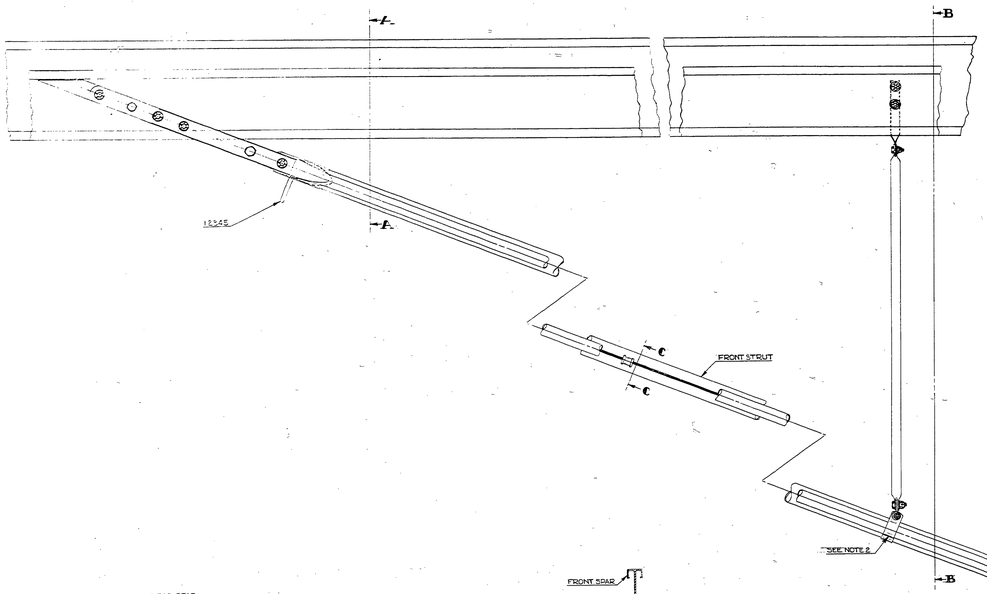

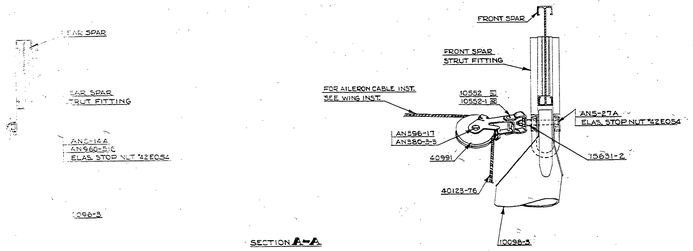

SECTION A-A

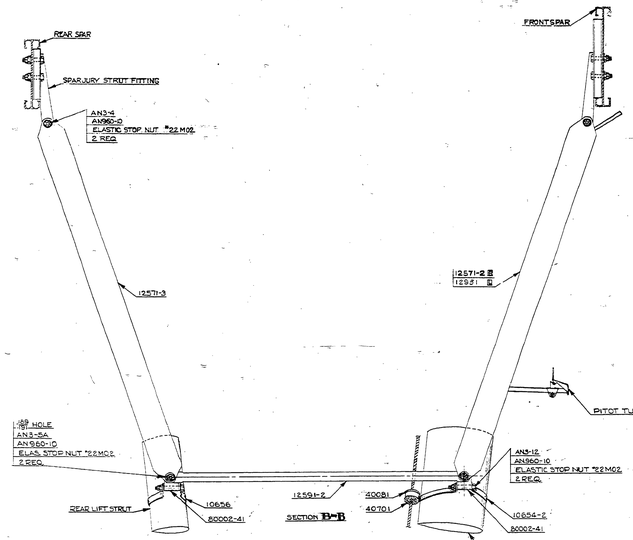

SECTION B-B

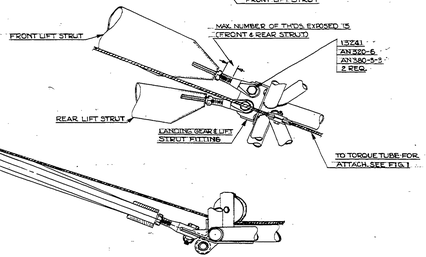

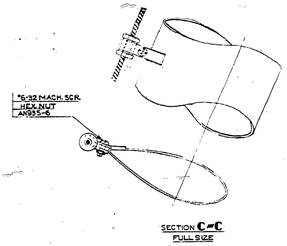

SECTION C-C
FULL SIZE

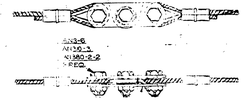

NOTES:
1. LEFT INSTALLATION SHOWN.
PARTS MARKED (L) USED IN LEFT INST. ONLY.
PARTS MARKED (R) USED IN RIGHT INST. ONLY.
2. ADJUST CLAMPS TO KEEP LIFT STRUTS STRAIGHT.

			AUTOMATIC PITCH CONTROL
			MODEL PA-PUR-[illegible] FLYING
			SERVICE, PEARSALL, TEXAS
		2	"ZZ6004 ELAS. STOP NUT
			"8ZM08"
REFER TO		1	HEX. NUT
"6-32			BAL. RD. HD. MACH. SCREW
AN960-			
AN7-		4	WASHER
AN7-			
AN-26-			FLAT HEAD
AN960-			
AN960-		6	COTTER PIN
AN6-		2	NUT
AN4-5A	1		
AN-12A			
AN-12	5		
AN-6	13		BOLT
AN3-5A	8		
AN3-4	8		
10831-2	2		LINK
10824-2	2		CLAMP
40991	1		PULLEY
40701	2		FAIRLEAD ASSEMBLY
13974	1		CABLE
40081	2		SNAP RING
12571-3	1		SPACER & BUSHING
12941	2		BOLT
12591-2	1		SPACER TUBE
12571-3	1		REAR JURY STRUT
12571-2	1		JURY STRUT ASSY.
1331			
2345	1		TIE DOWN FITTING ASSY.
10656	1		REAR STRUT CLAMP
10656-21	1		CLAMP ASSEMBLY
10655-1	1		PULLEY HOUSING ASSY.
2332	1		
12591-3	1		FRONT STRUT ASSY.
12596-3	1		REAR STRUT ASSY.
QTY.	NO.		PARTS LIST

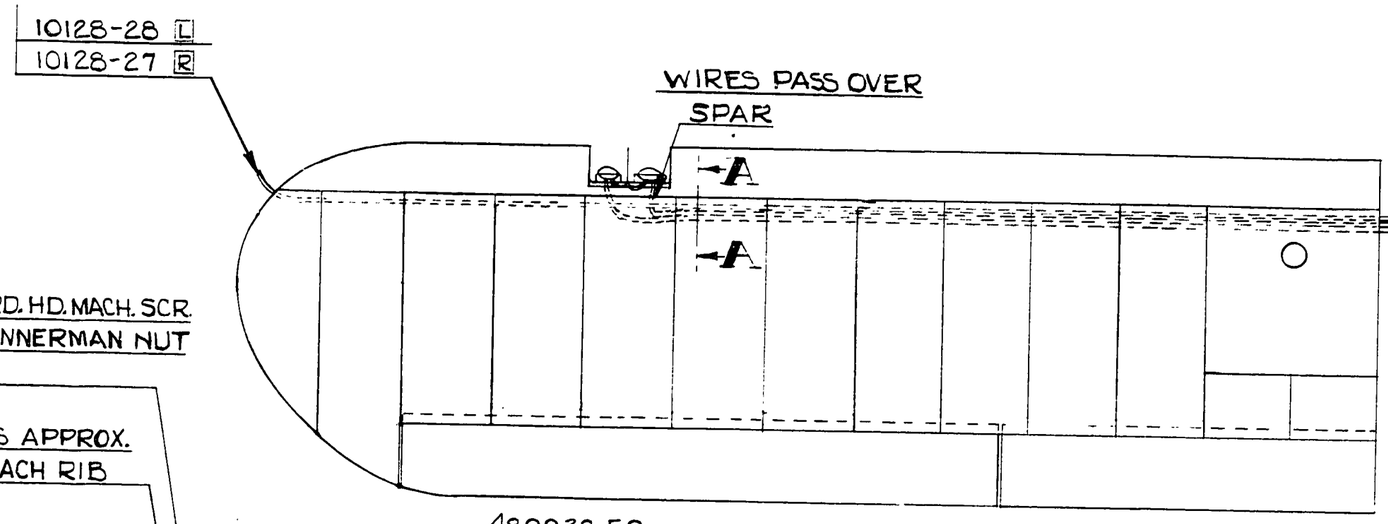

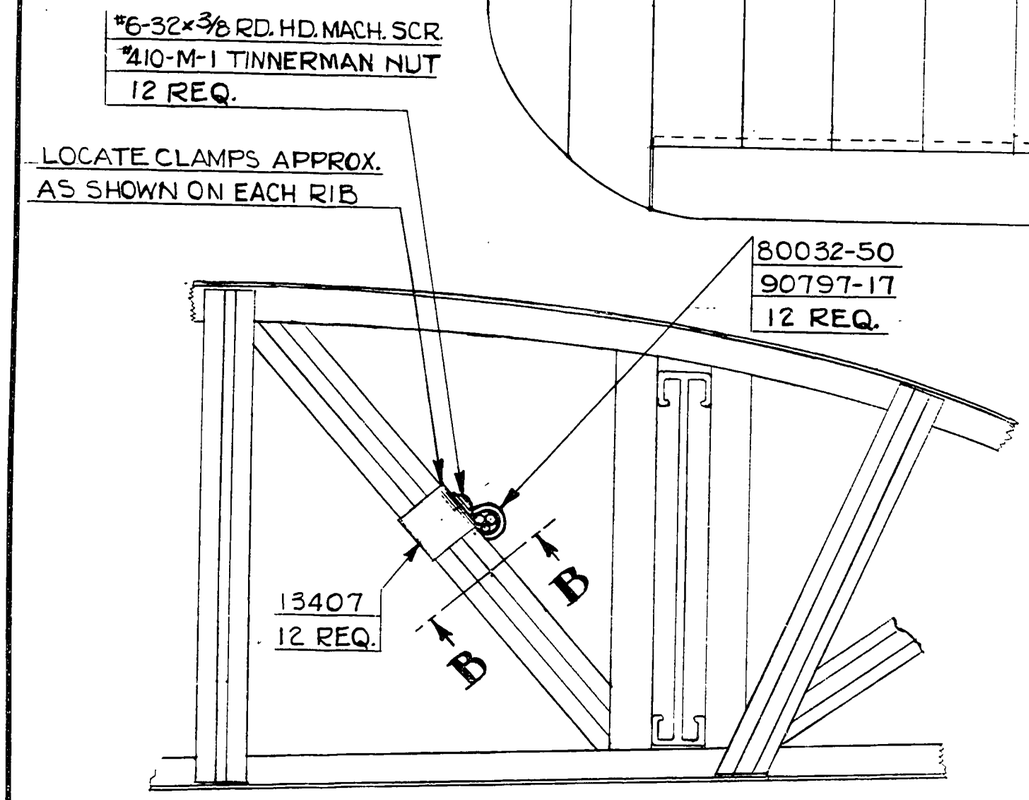

SECTION A-A
6 IN. = 1 FT.

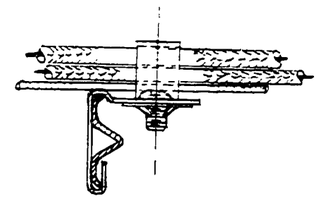

SECTION B-B
FULL SIZE

NOTE:

1. PARTS MARKED L USED ON LEFT INST. ONLY.
   PARTS MARKED R USED ON RIGHT INST. ONLY.

PART No.	No. REQ.	NAME / MATERIAL
	12	#410-M-1 TINNERMAN NUT
#6-32	12	3/8 L. RD HD. MACH. SCREW
90797-17	12	INSULATING SLEEVE
80032-50	12	OFFSET CLAMP
13407	12	CLAMP MOUNTING CLIP
10128-28	1 L	WIRE ASS'Y.
10128-27	1 R	

SCALE 1/2"=1FT. & NOTED | TOTAL WT.-LBS.
FINISH—PIPER SPECIFICATION #10
MANUFACTURING PRACTICES—PIPER SPECIFICATION #9

WIRE INSTALLATION—NAVIGATION LIGHT

THIS DRAWING IS THE PROPERTY OF THE PIPER AIRCRAFT CORP. AND ITS POSSESSION BY UNAUTHORIZED PERSONS SHALL NOT BE CONSTRUED AS PERMISSION TO REPRODUCE FOR SALE, IN WHOLE OR IN PART, ANY DEVICES SHOWN THEREON

LET.	REVISION	DATE	BY

MODEL	PER PLANE	NEXT ASSEMBLY	SUPERSEDES	SUP. BY
L-21A				

PIPER AIRCRAFT CORP.
LOCK HAVEN, PENNA.

DRAFTSMAN	CHECKER	STANDARDS	
J. E. M. 5-14-51	H. R. K. 5-15-51		13406

577

A577

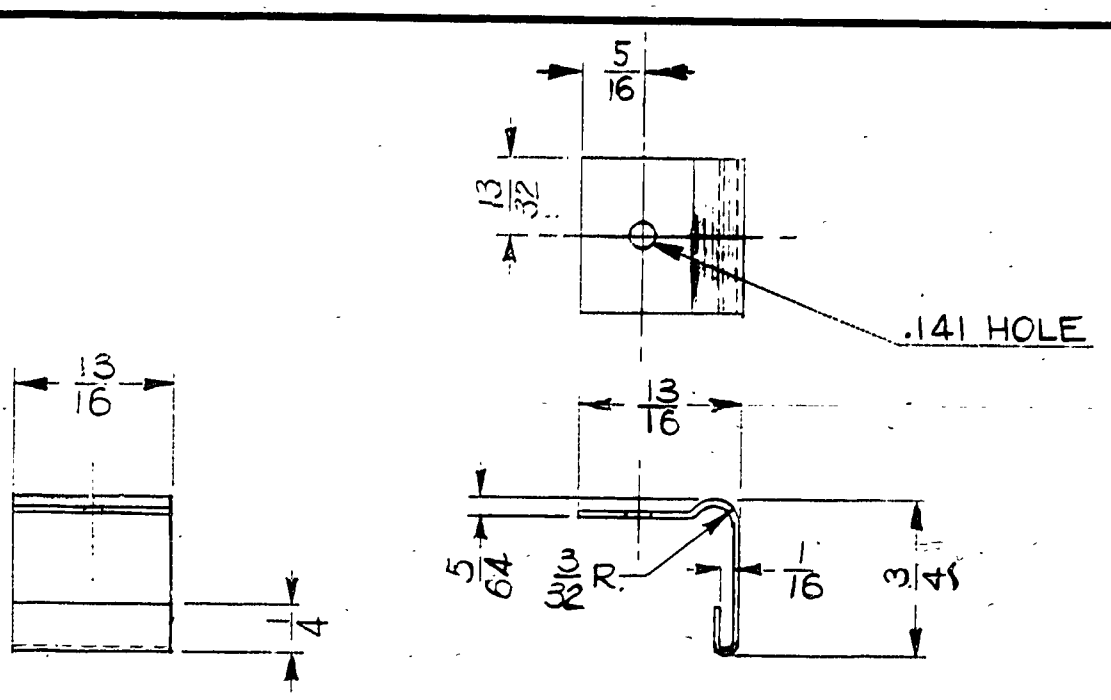

LET.	REVISION	DATE	BY	MODEL	PER PLANE	NEXT ASSEMBLY	SUPERSEDES	SUP. BY	

THIS DRAWING IS THE PROPERTY OF THE PIPER AIRCRAFT CORP. AND ITS POSSESSION BY UNAUTHORIZED PERSONS SHALL NOT BE CONSTRUED AS PERMISSION TO REPRODUCE FOR SALE, IN WHOLE OR IN PART, ANY DEVICES SHOWN THEREON.

PIPER AIRCRAFT CORP.
LOCK HAVEN, PENNA.

PART No.	No. REQ.	SIZE	DESCRIPTION
		.020 x 13/16 x 1 7/8	3S-½H. ALUM.
		MATERIAL	

SCALE FULL SIZE — TOTAL WT.–LBS.

FINISH–PIPER SPECIFICATION #10

MANUFACTURING PRACTICES–PIPER SPECIFICATION #9

CLIP-CLAMP MOUNTING

DRAFTSMAN	CHECKER	STANDARDS
I. E. M. 5-14-51	H. R. K. 5-15-51	

13407

168

A 168

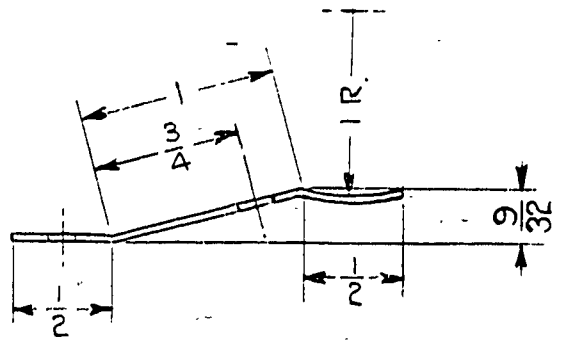

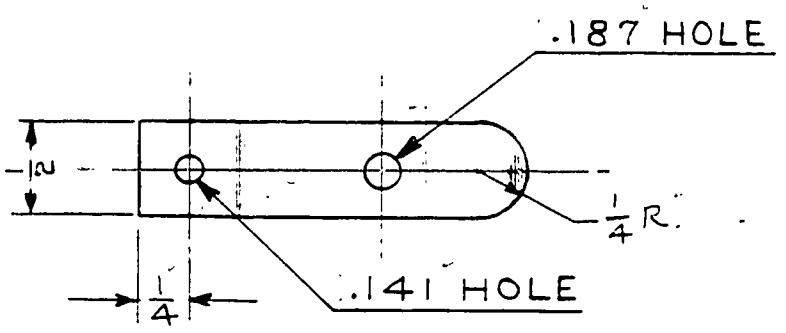

		.022 × 1/2 × 2	SPRING STEEL
		SIZE	DESCRIPTION
PART No.	No. REQ.	MATERIAL	
SCALE FULL SIZE		TOTAL WT.—LBS.	
FINISH—PIPER SPECIFICATION #10			
MANUFACTURING PRACTICES—PIPER SPECIFICATION #9			

PLATE—FLEXIBLE CONTROL LOCK

LET.	REVISION	DATE	BY

MODEL	PER PLANE	NEXT ASSEMBLY	SUPERSEDES	SUP. BY

THIS DRAWING IS THE PROPERTY OF THE PIPER AIRCRAFT CORP. AND ITS POSSESSION BY UNAUTHORIZED PERSONS SHALL NOT BE CONSTRUED AS PERMISSION TO REPRODUCE FOR SALE, IN WHOLE OR IN PART, ANY DEVICES SHOWN THEREON.

PIPER AIRCRAFT CORP.
LOCK HAVEN, PENNA.

DRAFTSMAN	CHECKER	STANDARDS	
I.M.M. 5-14-51	H.R.K. 5-21-51		13408

169

A169

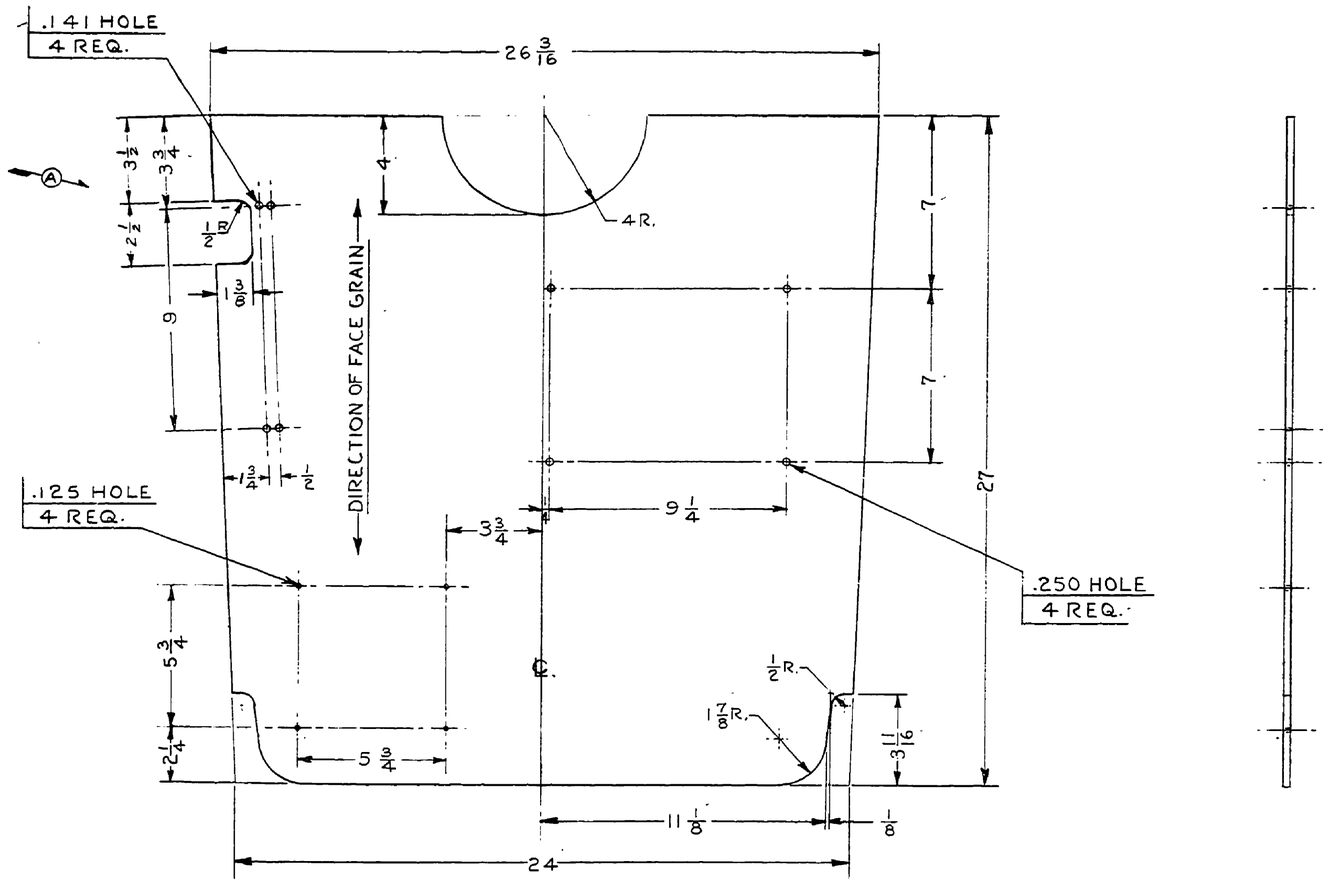

				THIS DRAWING IS THE PROPERTY OF THE PIPER AIRCRAFT CORP. AND ITS POSSESSION BY UNAUTHORIZED PERSONS SHALL NOT BE CONSTRUED AS PERMISSION TO REPRODUCE FOR SALE, IN WHOLE OR IN PART, ANY DEVICES SHOWN THEREON					
				L-21A					
				MODEL	PER PLANE	NEXT ASSEMBLY	SUPERSEDES	SUP. BY	
A	CUTOUT ADDED	6-28-51	C.B.	PIPER AIRCRAFT CORP. LOCK HAVEN, PENNA.					
LET.	REVISION	DATE	BY						

PART No.	No. REQ.	SIZE	DESCRIPTION
		1/4 × 26 3/16 × 27	3 PLY FIR PLYWOOD
		MATERIAL	
SCALE 3 IN. = 1 FT.		TOTAL WT.—LBS.	
FINISH—PIPER SPECIFICATION #10			
MANUFACTURING PRACTICES—PIPER SPECIFICATION #9			
DECK			
I. M. M. 5-15-51	H. R. K. 5-15-51		13410
DRAFTSMAN	CHECKER	STANDARDS	

A784

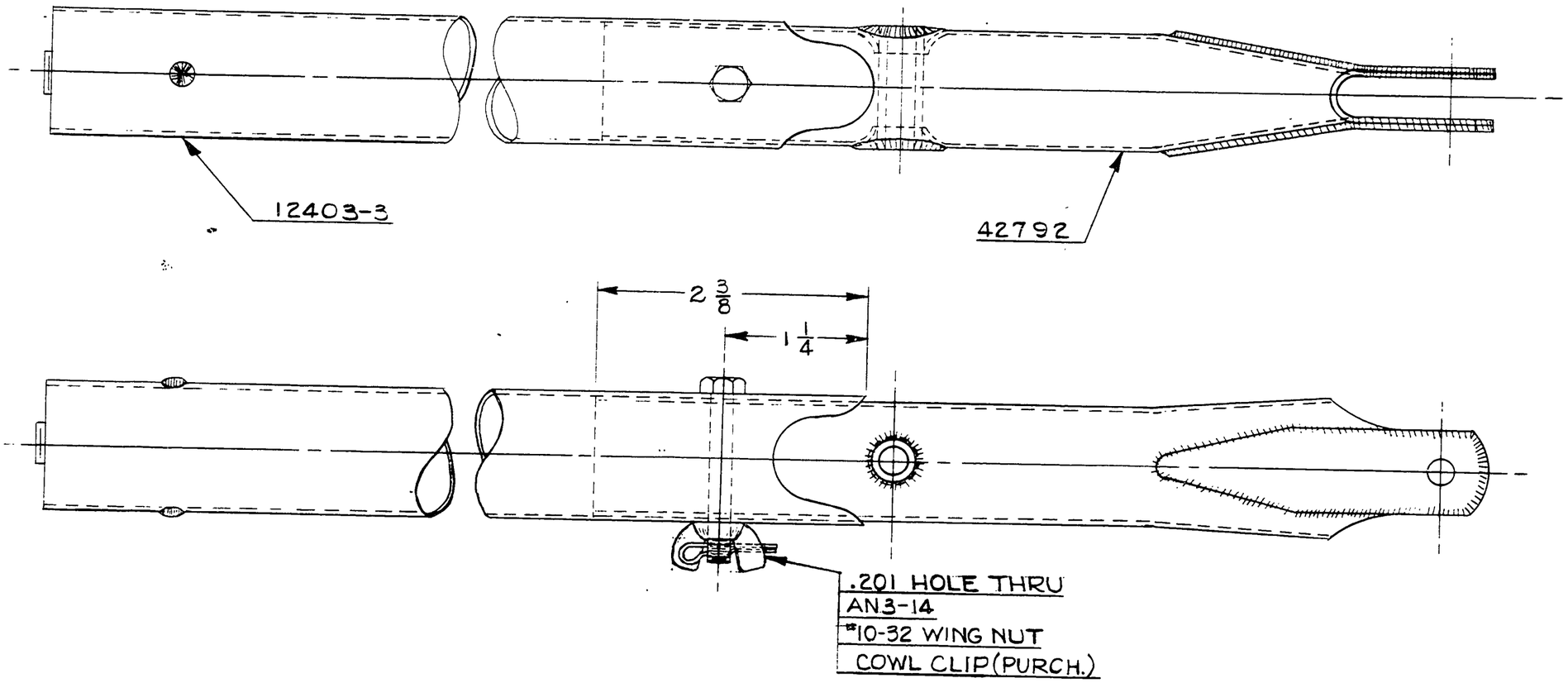

	1	COWL CLIP #62 PURCH. AIR ASSOCIATES
#10-32	1	WING NUT
AN3-14	1	BOLT
42792	1	STICK STUB ASS'Y.
12403-3	1	CONTROL STICK
PART No.	No. REQ.	MATERIAL

SCALE FULL SIZE | TOTAL WT.—LBS.

FINISH—PIPER SPECIFICATION #10

MANUFACTURING PRACTICES—PIPER SPECIFICATION #9

STICK ASSEMBLY—CONTROL

THIS DRAWING IS THE PROPERTY OF THE PIPER AIRCRAFT CORP. AND ITS POSSESSION BY UNAUTHORIZED PERSONS SHALL NOT BE CONSTRUED AS PERMISSION TO REPRODUCE FOR SALE, IN WHOLE OR IN PART, ANY DEVICES SHOWN THEREON

LET.	REVISION	DATE	BY

MODEL	PER PLANE	NEXT ASSEMBLY	SUPERSEDES	SUP. BY

PIPER AIRCRAFT CORP.
LOCK HAVEN, PENNA.

DRAFTSMAN	CHECKER	STANDARDS
L.E.M. 5-17-51	H.R.K. 5-18-51	

13412

578

A 578

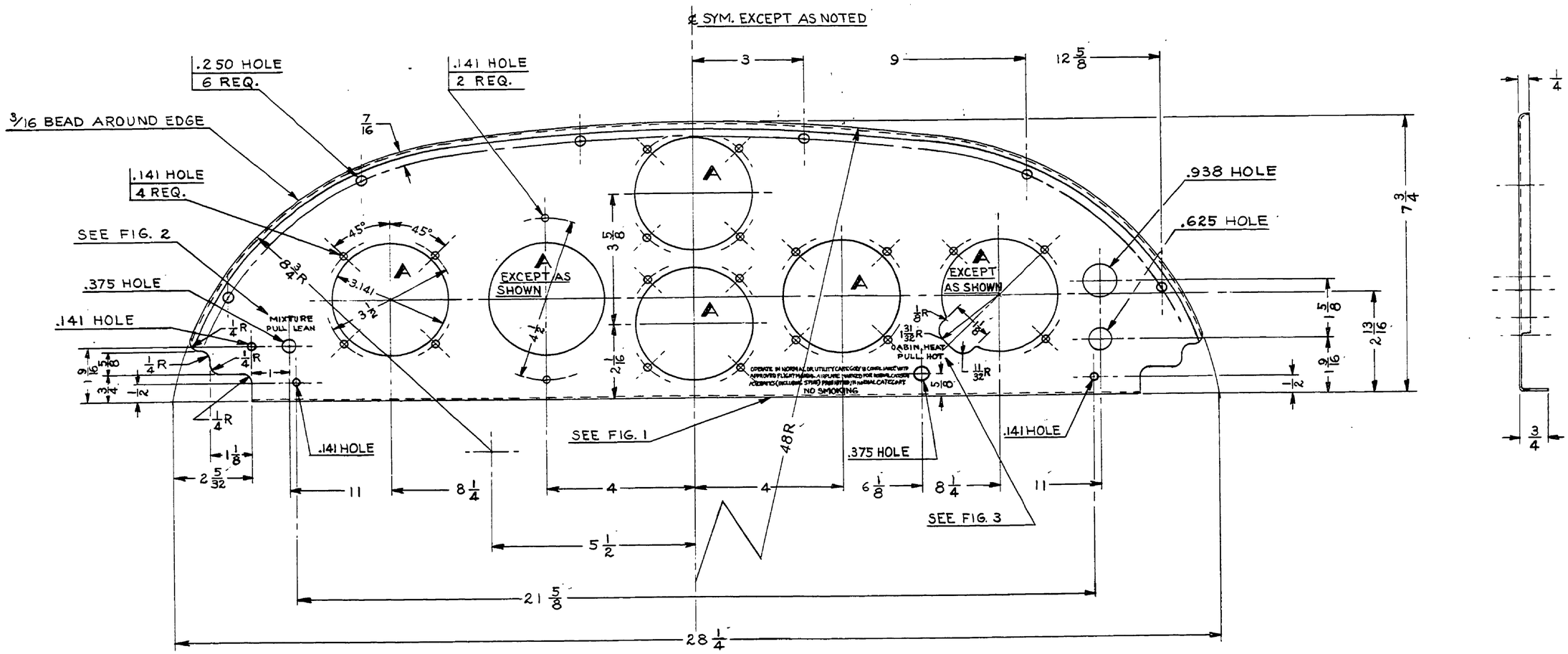

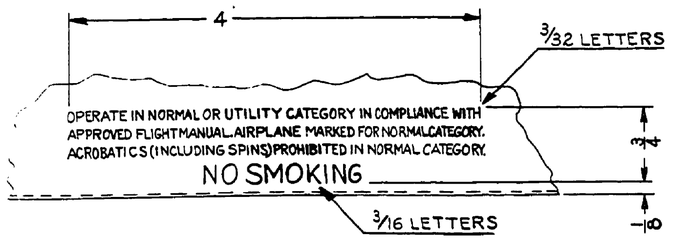

FIG. 1
FULL SIZE

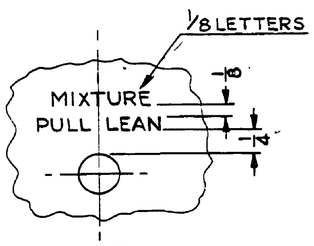

FIG. 2
FULL SIZE

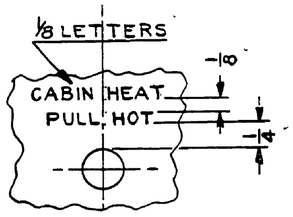

FIG. 3
FULL SIZE

NOTE:

1. DIMENSIONS ARE IDENTICAL FOR ALL HOLES MARKED WITH LETTER **A** (6 PLACES) EXCEPT AS SHOWN.

THIS DRAWING IS THE PROPERTY OF THE PIPER AIRCRAFT CORP. AND ITS POSSESSION BY UNAUTHORIZED PERSONS SHALL NOT BE CONSTRUED AS PERMISSION TO REPRODUCE FOR SALE, IN WHOLE OR IN PART, ANY DEVICES SHOWN THEREON

LET.	REVISION	DATE	BY
A	52S½H ALUM. WAS 3S½H ALUM.	6-28-51	M.G.

MODEL	PER PLANE	NEXT ASSEMBLY	SUPERSEDES	SUP. BY

PIPER AIRCRAFT CORP.
LOCK HAVEN, PENNA.

PART NO.	NO. REQ.	SIZE	DESCRIPTION
		.032 x 8 3/4 x 28 1/4	52S-1/2 H. ALUM.
		MATERIAL	

SCALE 6 IN. = 1 FT. & NOTED | TOTAL WT.—LBS.
FINISH—PIPER SPECIFICATION #10
MANUFACTURING PRACTICES—PIPER SPECIFICATION #9

PANEL-INSTRUMENT

DRAFTSMAN	CHECKER	STANDARDS
C. E. K. 5-18-51	H. R. K. 5-21-51	

13413

A

785

A785

STANDARD AIRSPEED INDICATOR ASSY. U.S.A.F. TYPE B-8
EXCEPT WITH FACE MARKED AS SHOWN & NOTED.

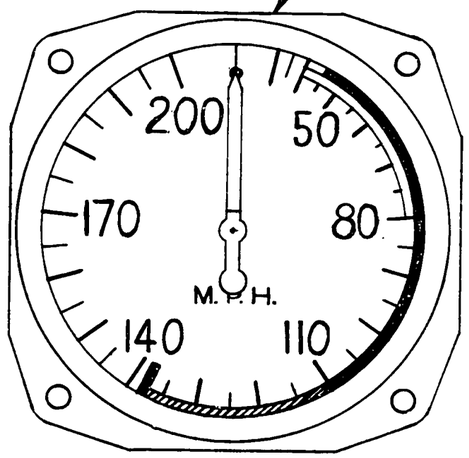

NOTES:

1. FACE MARKED AS FOLLOWS:
   - MAXIMUM DIVING SPEED - 138 M. P. H. - RED LINE
   - CAUTION SPEED 110 TO 138 - YELLOW ARC
   - NORMAL SPEED 45 TO 110 - GREEN ARC
   - FLAPS 40 TO 80 - WHITE ARC
2. ALL MARKINGS 1/16 STROKE
3. WHITE ARC TO BE INSIDE GREEN ARC.

LET.	REVISION	DATE	BY

THIS DRAWING IS THE PROPERTY OF THE PIPER AIRCRAFT CORP. AND ITS POSSESSION BY UNAUTHORIZED PERSONS SHALL NOT BE CONSTRUED AS PERMISSION TO REPRODUCE FOR SALE, IN WHOLE OR IN PART, ANY DEVICES SHOWN THEREON

MODEL	PER PLANE	NEXT ASSEMBLY	SUPERSEDES	SUP. BY

PIPER AIRCRAFT CORP.
LOCK HAVEN, PENNA.

PART No.	No. REQ.	MATERIAL

SCALE FULL SIZE — TOTAL WT.—LBS.
FINISH—PIPER SPECIFICATION #10
MANUFACTURING PRACTICES—PIPER SPECIFICATION #9

INDICATOR ASSEMBLY—
AIR SPEED

C. E. K.	H. R. K.		
5-18-51	5-18-51		13414
DRAFTSMAN	CHECKER	STANDARDS	

529

A579

STANDARD TACHOMETER ASSY. U.S.A.F. TYPE C-11
EXCEPT WITH FACE MARKED AS SHOWN & NOTED

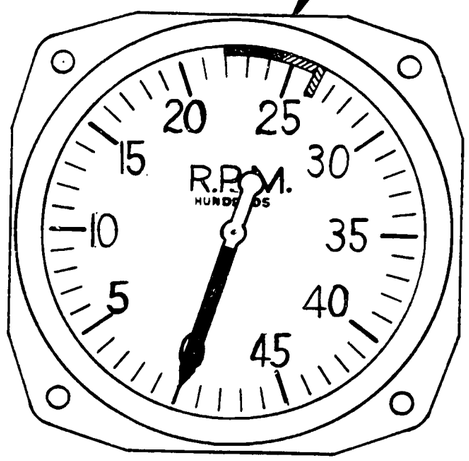

NOTES:

1. FACE MARKED AS FOLLOWS:
   MAXIMUM R.P.M. – 2600, RED LINE
   CAUTION-2450 TO 2600, YELLOW ARC
   NORMAL OPERATING - 2200 TO 2450
2. ALL MARKINGS 1/16 STROKE

THIS DRAWING IS THE PROPERTY OF THE PIPER AIRCRAFT CORP. AND ITS POSSESSION BY UNAUTHORIZED PERSONS SHALL NOT BE CONSTRUED AS PERMISSION TO REPRODUCE FOR SALE, IN WHOLE OR IN PART. ANY DEVICES SHOWN THEREON

LET.	REVISION	DATE	BY

MODEL	PER PLANE	NEXT ASSEMBLY	SUPERSEDES	SUP. BY
L 21A				

PIPER AIRCRAFT CORP.
LOCK HAVEN, PENNA.

PART No.	No. REQ.	MATERIAL
SCALE FULL SIZE		TOTAL WT.–LBS.
FINISH–PIPER SPECIFICATION #10		
MANUFACTURING PRACTICES–PIPER SPECIFICATION #9		

TACHOMETER ASSEMBLY

DRAFTSMAN	CHECKER	STANDARDS	
C. E. K. 5-18-51	H. R. K. 5-21-51		13415

580

A580

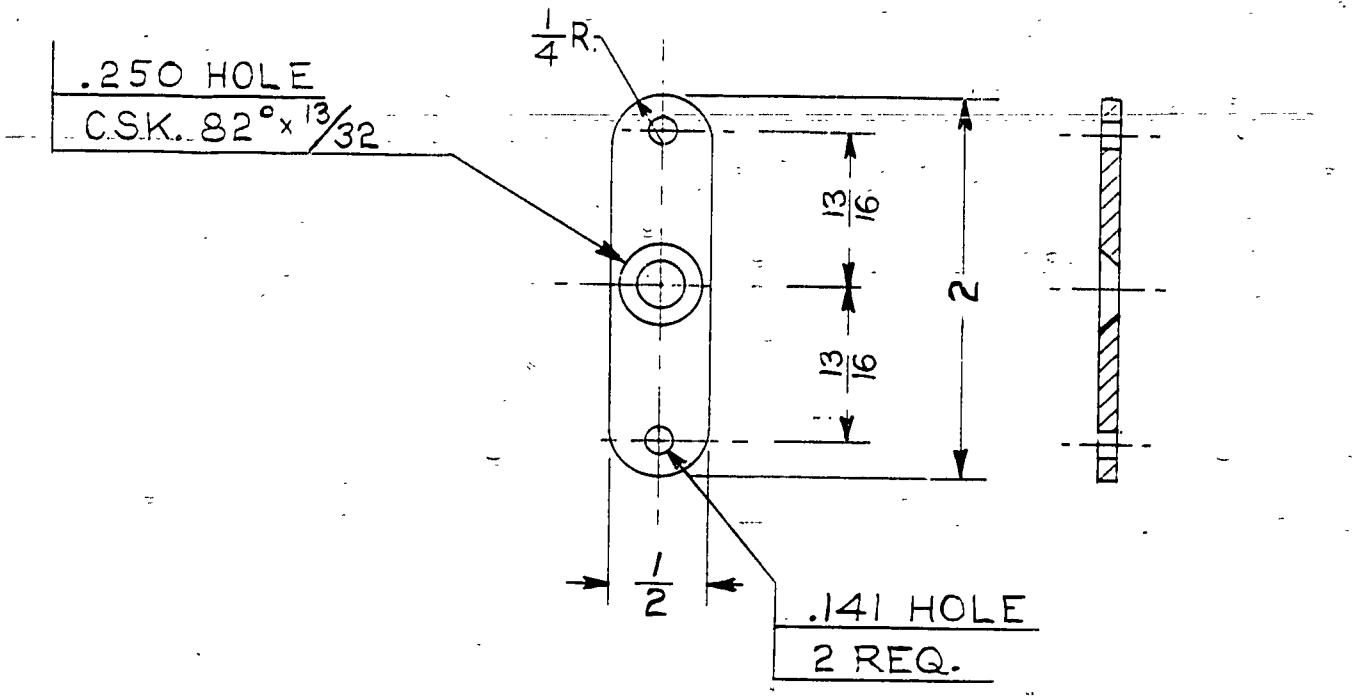

LET.	REVISION	DATE	BY	L-21A					
				MODEL	PER PLANE	NEXT ASSEMBLY	SUPERSEDES	SUP. BY	

THIS DRAWING IS THE PROPERTY OF THE PIPER AIRCRAFT CORP. AND ITS POSSESSION BY UNAUTHORIZED PERSONS SHALL NOT BE CONSTRUED AS PERMISSION TO REPRODUCE FOR SALE, IN WHOLE OR IN PART, ANY DEVICES SHOWN THEREON.

PIPER AIRCRAFT CORP.
LOCK HAVEN, PENNA.

PART No.	No. REQ.	SIZE	DESCRIPTION
		.095 x 1/2 x 2	#1025 STEEL
			MATERIAL

SCALE FULL SIZE — TOTAL WT.—LBS.

FINISH—PIPER SPECIFICATION #10

MANUFACTURING PRACTICES—PIPER SPECIFICATION #9

LINK

DRAFTSMAN	CHECKER	STANDARDS
H.R.K. 5-23-51	C.E.K. 5-23-51	

13417

170

A170

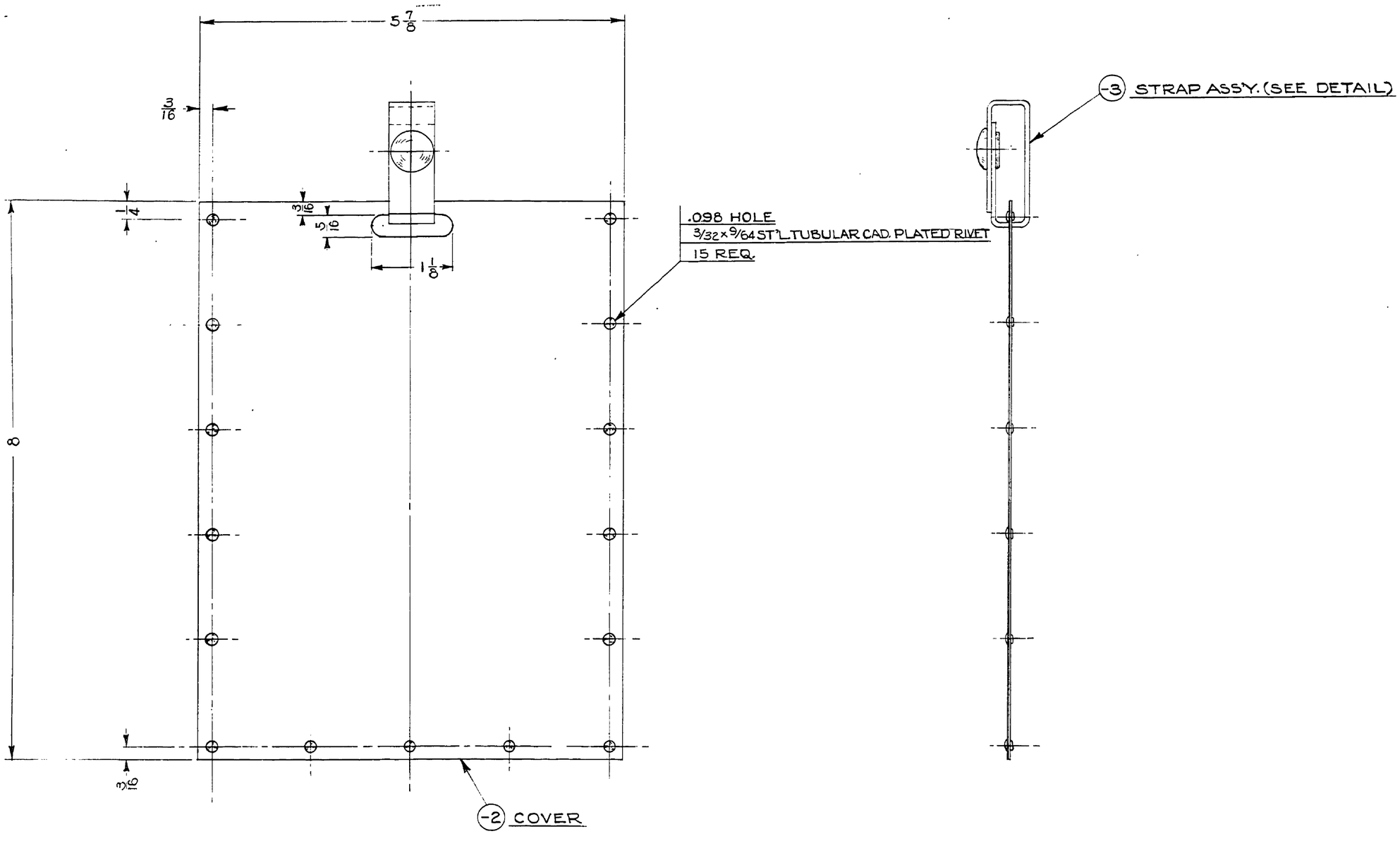

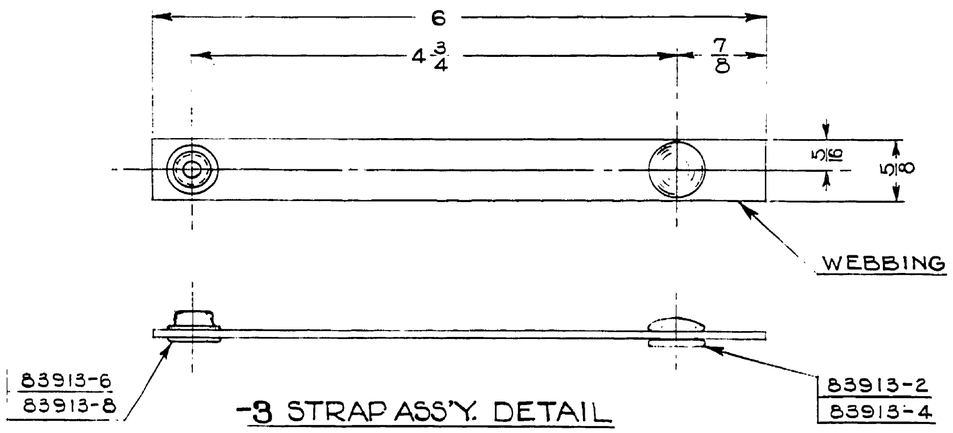

-3 STRAP ASS'Y. DETAIL

	NO. REQ.	SIZE	DESCRIPTION
	15	5/32 x 9/64	ST'L TUBULAR CAD PLATED RIVET
	1	1/16 x 5/8 x 6	OLIVE GREEN WEBBING - COMMERCIAL VATOD-BN-6182
83913-8	1		EYELET
83913-6	1		STUD
83913-4	1		SOCKET
83913-2	1		BUTTON
-3	–		STRAP ASS'Y. CONSISTS OF 83913-2, 83913-4, 83913-6, 83913-8 & WEBBING
-2	2	.015 x 5 7/8 x 8	CLEAR PYRALIN

PART NO. | MATERIAL

SCALE FULL SIZE | TOTAL WT.–LBS.

FINISH–PIPER SPECIFICATION #10

MANUFACTURING PRACTICES–PIPER SPECIFICATION #9

THIS DRAWING IS THE PROPERTY OF THE PIPER AIRCRAFT CORP. AND ITS POSSESSION BY UNAUTHORIZED PERSONS SHALL NOT BE CONSTRUED AS PERMISSION TO REPRODUCE FOR SALE, IN WHOLE OR IN PART, ANY DEVICES SHOWN THEREON

MODEL	PER PLANE	NEXT ASSEMBLY	SUPERSEDES	SUP. BY
J-3A				

LET.	REVISION	DATE	BY
A	REDRAWN & REVISED	6-20-51	L.E.M.

PIPER AIRCRAFT CORP.
LOCK HAVEN, PENNA.

HOLDER ASSEMBLY-AIRPLANE CHECK LIST

L. E. M.	H. R. K.		13422
6-20-51	6-20-51		
DRAFTSMAN	CHECKER	STANDARDS	

786

A786

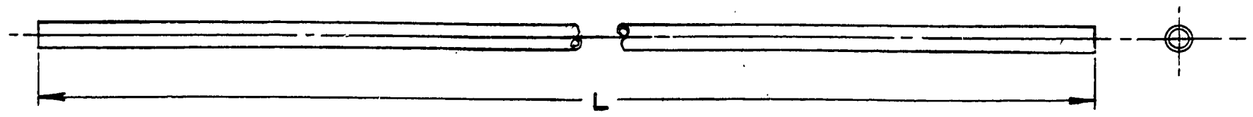

PART NO.	L	MATERIAL	MODEL	PER PLANE	NEXT ASSEMBLY
13541-2	62½	3S-0 ALUM. OR COPPER	J3	1	13112 15556
13541-3	33	3S-0 ALUM. OR COPPER	J3	1	10554
13541-4	4	COPPER	J3	1	54503
			J5C	2	54603
13541-5	17¼	COPPER	J3	1	12931
13541-6	23	3S-0 ALUM. OR COPPER			
13541-7	42	3S-0 ALUM. OR COPPER			
13541-8	67	3S-0 ALUM. OR COPPER	J5C	2	12411
13541-9	36	3S-0 ALUM. OR COPPER	J5C	2	54603
13541-10	28	3S-0 ALUM. OR COPPER			
13541-11	69	3S-0 ALUM. OR COPPER	J5C	1	24186
13541-12	76	3S-0 ALUM. OR COPPER	J5C	1	24186
13541-13	52	3S-0 ALUM OR COPPER			
13541-14	25	3S-0 ALUM OR COPPER			
13541-15	16	COPPER			

"This drawing is the property of the Piper Aircraft Corp. and its possession by unauthorized persons shall not be construed as permission to reproduce for sale, in whole or in part, any devices shown thereon."

LET.	REVISION	DATE	BY	MODEL	PER PLANE	NEXT ASSEMBLY	SUPERSEDES	SUP. BY
X	-15 ADDED	5-11-51	H.E.M.					
W	-14 ADDED	3-23-49	C.E.K.					
V	52 L WAS 50L	12-1-47	R.M.					
U	-13 ADDED	8-15-47	R.M.					
T	3S-0 ALUM. WAS 2S-0 ALUM.	10-17-46	C.E.K.					
S	J3NA.54503 WAS 24176 FOR-4	4-26-46	C.E.V.	NOTED	NOTED	NOTED		
R	J3.N.A.10554 WAS 24176 FOR-3	4-8-96	L.R.					
Q	J5C MODEL REF. CANC. FOR-9	12-10-45	H.M.M.					
P	REDRAWN & REVISED	11-9-45	L.R.					

PIPER AIRCRAFT CORP.
LOCK HAVEN, PENNA.

PART No.	No. REQ.	SIZE	DESCRIPTION / MATERIAL
		3/16 × .032 × NOTED	NOTED

SCALE FULL SIZE — TOTAL WT.–LBS.

FINISH—PIPER SPECIFICATION #10

MANUFACTURING PRACTICES—PIPER SPECIFICATION #9

TUBING—AIRSPEED

DRAFTSMAN	CHECKER	STANDARDS
L.R. 11-9-45	E.E.T. 11-23-45	

13541

5-82

A 582

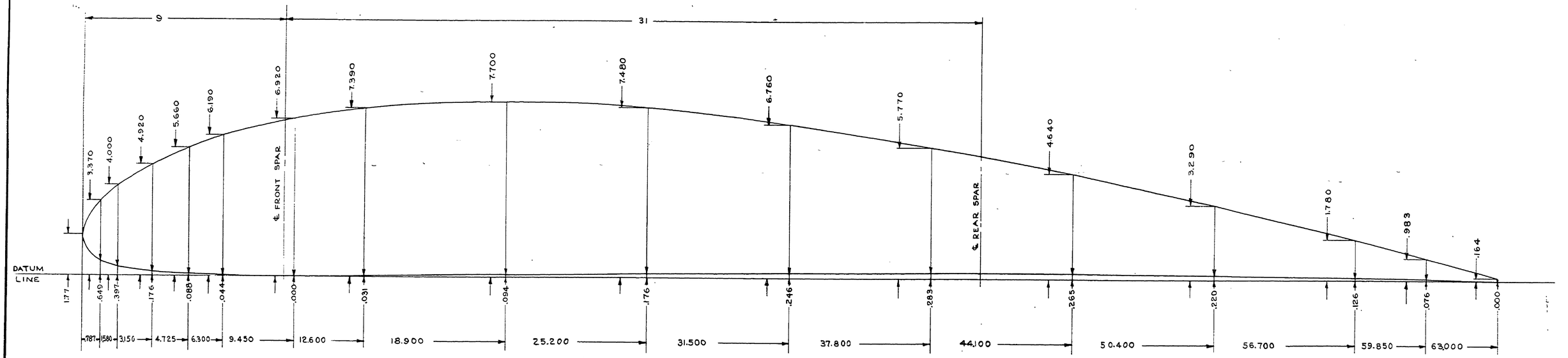

U.S.A. 35B AIRFOIL WITH UPPER ORDINATES INCREASED BY 4%

MODEL	NEXT ASSEMBLY
J5, J5C, J5D, HE-1	15252, 15812, 15881, 15822, 15832
L-4A, J3	12882, 15382, 15292, 15262, 15272, 13052
L-14	90462, 90466, 90518, 90452, 90465, 90467 15822, 15832, 90450, 90451, 90453, 90458

LET.	REVISION	DATE	BY
H	REDRAWN WITHOUT CHANGE	6-15-51	I.M.M.
G	J5C N.A. 10642 REM.	11-30-45	E.L.N.
F	L-14 N.A. 90467, 90518 ADDED	7-3-45	I.D.B.
E	L-14 N.A. 90462, 90465, 90466 ADDED	7-3-45	I.D.B.
D	L-14 N.A. 15822, 15832, 90450 ADDED	7-3-45	I.D.B.
C	L-14 MODEL REF. ADDED	3-17-45	E.L.N.
B	J5 MODEL REF. ADDED.	8-18-45	I.D.B.
A	REDRAWN & REVISED WAS 13812	4-21-45	J.E.C.

MODEL	PER PLANE	NEXT ASSEMBLY	SUPERSEDES	SUP. BY
NOTED		NOTED		

THIS DRAWING IS THE PROPERTY OF THE PIPER AIRCRAFT CORP. AND ITS POSSESSION BY UNAUTHORIZED PERSONS SHALL NOT BE CONSTRUED AS PERMISSION TO REPRODUCE FOR SALE, IN WHOLE OR IN PART, ANY DEVICES SHOWN THEREON.

PIPER AIRCRAFT CORP.
LOCK HAVEN, PENNA.

PART No. | No. REQ. | MATERIAL
SCALE 6 IN. = 1 FT. | TOTAL WT.—LBS.
FINISH—PIPER SPECIFICATION 810
MANUFACTURING PRACTICES—PIPER SPECIFICATION 29

RIB OUTLINE — WING FULL

DRAFTSMAN	CHECKER	STANDARDS
CROWLEY	L.E.K.	
4-21-43	4-28-43	

13814

A877

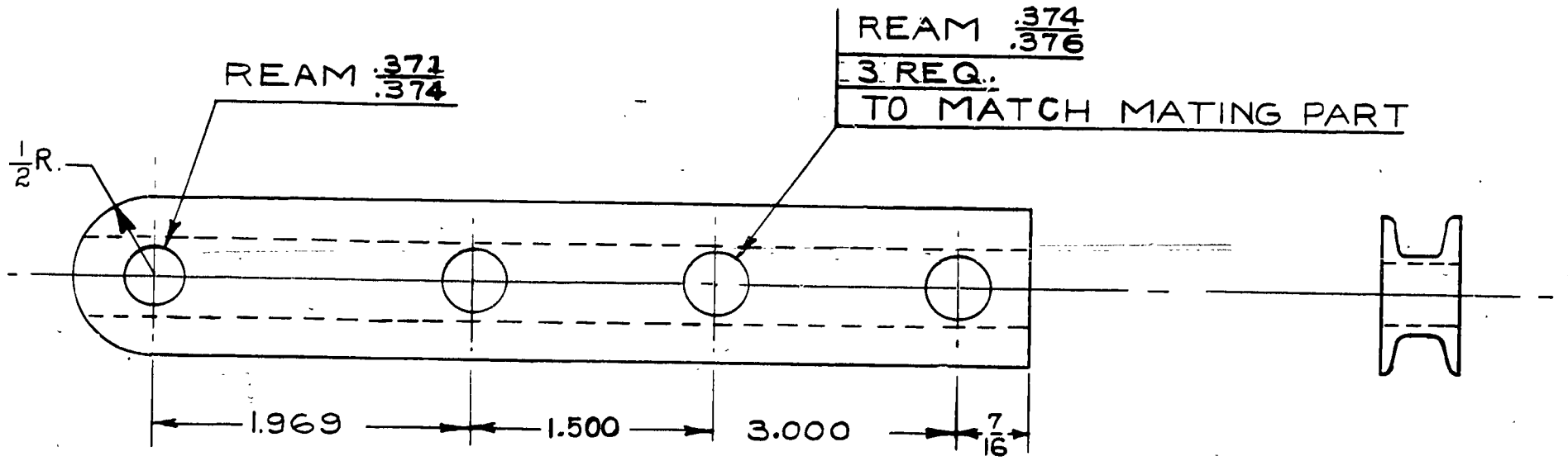

84931	DWG. REF. ONLY	FILLER BLOCK SECTION	
		5 13/16 LONG	PIPER SECTION 84931
PART No.	No. REQ.	SIZE	DESCRIPTION
		MATERIAL	
SCALE FULL SIZE		TOTAL WT.—LBS.	

FINISH—PIPER SPECIFICATION #10

MANUFACTURING PRACTICES—PIPER SPECIFICATION #9

THIS DRAWING IS THE PROPERTY OF THE PIPER AIRCRAFT CORP. AND ITS POSSESSION BY UNAUTHORIZED PERSONS SHALL NOT BE CONSTRUED AS PERMISSION TO REPRODUCE FOR SALE, IN WHOLE OR IN PART. ANY DEVICES SHOWN THEREON.

MODEL	PER PLANE	NEXT ASSEMBLY	SUPERSEDES	SUP. BY
J3	4	74302		

LET.	REVISION	DATE	BY
D	REDRAWN & REVISED	3-25-46	I.D.B

PIPER AIRCRAFT CORP.
LOCK HAVEN, PENNA.

DRAFTSMAN	CHECKER	STANDARDS
I. D. B 3-25-36	E. E. T. 3-25-46	

FITTING—REAR SPAR BUTT HINGE

14161

FOR METAL SPAR WING

171

PENCILTEX A. & B. SMITH CO., PGH., PA.

A171

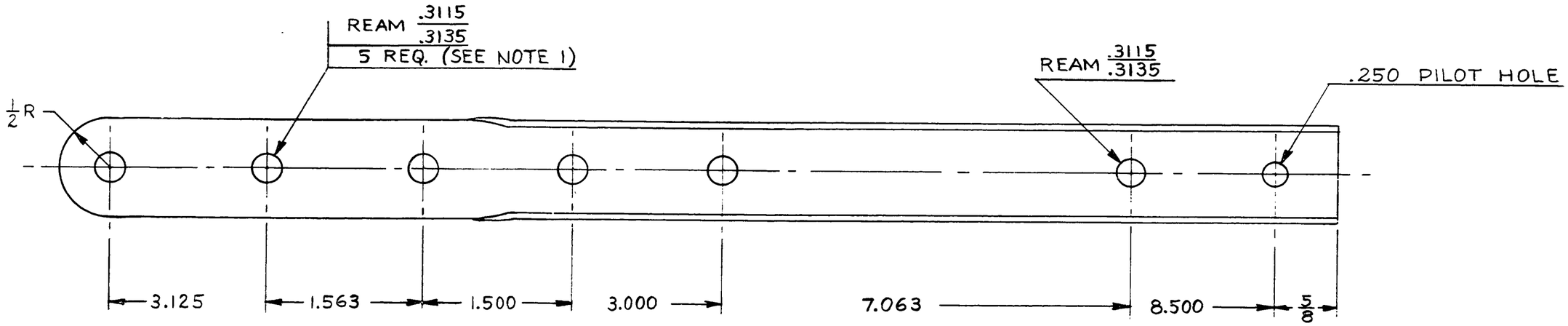

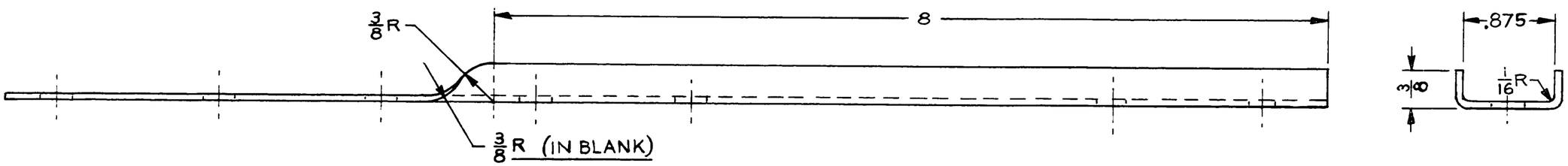

NOTE 1.
HOLES MUST COINCIDE WITH RELATED HOLES IN 14383 & 14461

LET	REVISION	DATE	BY
B	RERAWN WITHOUT CHANGE	6-12-51	C.K.
A	REDRAWN & REVISED	6-11-43	C.K.

THIS DRAWING IS THE PROPERTY OF THE PIPER AIRCRAFT CORP. AND ITS POSSESSION BY UNAUTHORIZED PERSONS SHALL NOT BE CONSTRUED AS PERMISSION TO REPRODUCE FOR SALE IN WHOLE OR IN PART ANY DEVICES SHOWN THEREON.

MODEL	PER PLANE	NEXT ASSEMBLY	SUPERSEDES	SUP. BY
J3	4	14192		
L-4A	4	14192		

PIPER AIRCRAFT CORP.
LOCK HAVEN, PENNA.

PART NO.	NO. REQ.	MATERIAL
		SIZE: .062 x 1 9/16 x 12 3/4 — DESCRIPTION: #1025 STEEL

SCALE FULL SIZE — TOTAL WT.—LBS.
FINISH—PIPER SPECIFICATION # 10
MANUFACTURING PRACTICES—PIPER SPECIFICATION # 9

FITTING — FRONT SPAR LIFT STRUT

DRAFTSMAN	CHECKER	STANDARDS
C. E. K. 6-11-43	L. E. K. 8-12-43	

14172

STP3

A 583

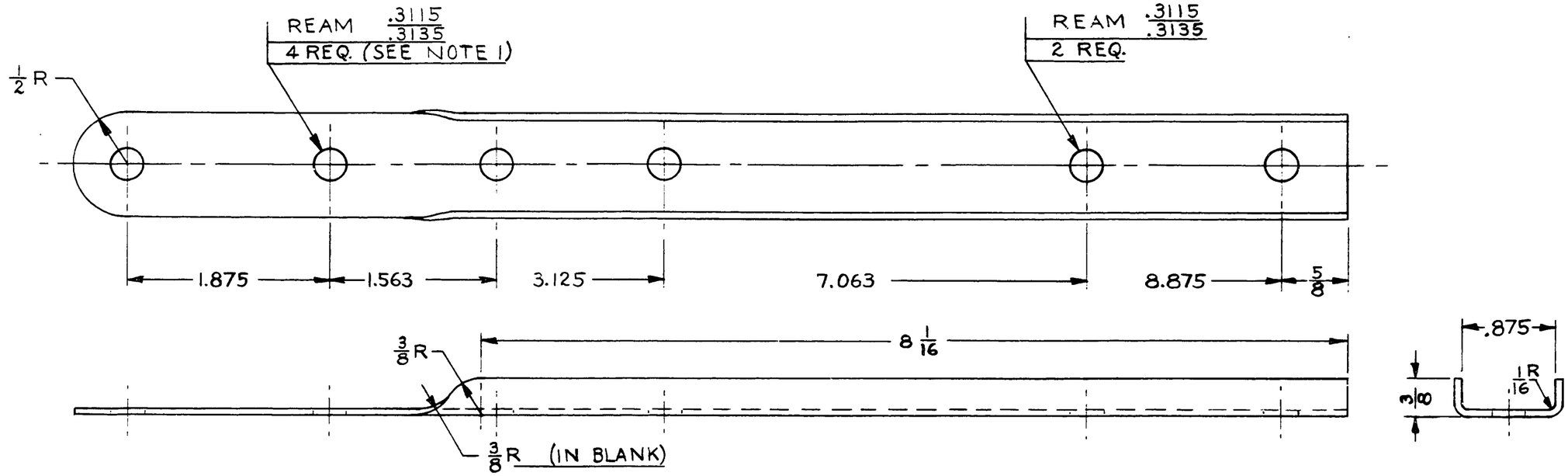

NOTE 1.
HOLES MUST COINCIDE WITH RELATED HOLES IN 14453 & 14271.

LET	REVISION	DATE	BY
B	REDRAWN WITHOUT CHANGE	6-12-51	C.K.
A	REDRAWN & REVISED	6-11-43	C.K.

MODEL	PER PLANE	NEXT ASSEMBLY	SUPERSEDES	SUP. BY
J3 / L4A	4 / 4	14283 / 14283		

THIS DRAWING IS THE PROPERTY OF THE PIPER AIRCRAFT CORP. AND ITS POSSESSION BY UNAUTHORIZED PERSONS SHALL NOT BE CONSTRUED AS PERMISSION TO REPRODUCE FOR SALE IN WHOLE OR IN PART ANY DEVICES SHOWN THEREON.

PIPER AIRCRAFT CORP.
LOCK HAVEN, PENNA.

PART NO.	NO. REQ.	SIZE	MATERIAL
		.062 x 1 9/16 x 11 7/8	*1025 STEEL

SCALE FULL SIZE | TOTAL WT.—LBS.
FINISH—PIPER SPECIFICATION # 10
MANUFACTURING PRACTICES—PIPER SPECIFICATION # 9

FITTING-REAR SPAR LIFT STRUT

DRAFTSMAN	CHECKER	STANDARDS
C. E. K. 6-11-43	L. E. K. 8-12-43	

14182

584

A 584

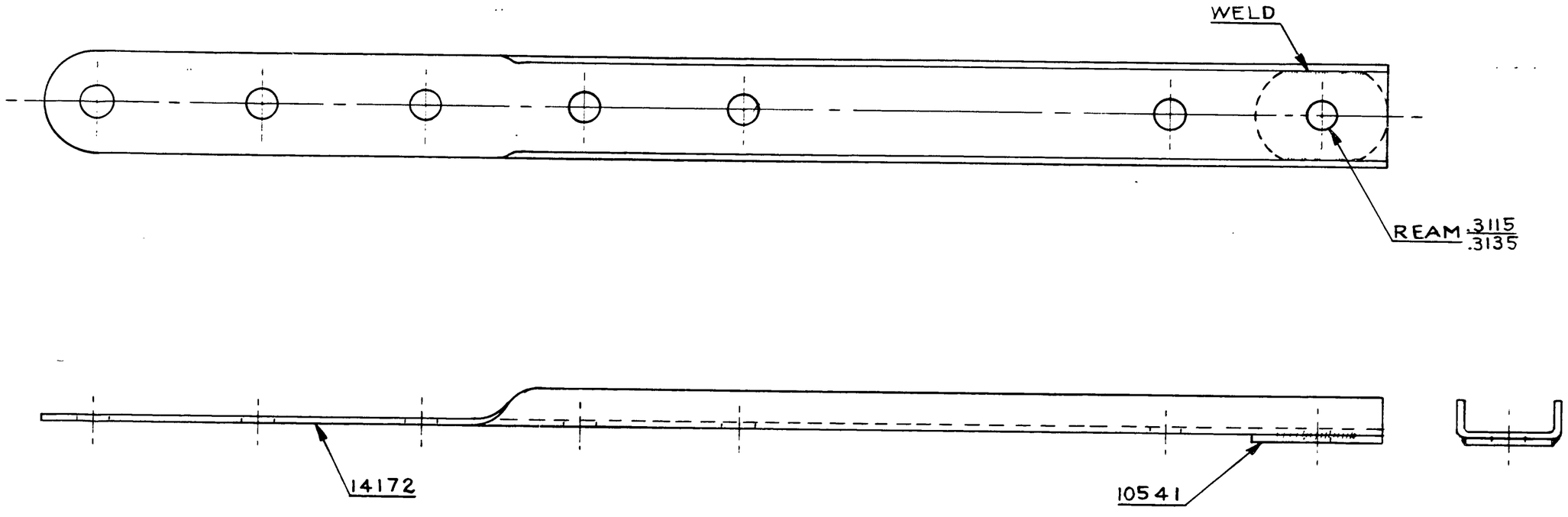

				C-AA	4	14433		
				J3	4	14433		
				MODEL	PER PLANE	NEXT ASSEMBLY	SUPERSEDES	SUP. BY

THIS DRAWING IS THE PROPERTY OF THE PIPER AIRCRAFT CORP. AND ITS POSSESSION BY UNAUTHORIZED PERSONS SHALL NOT BE CONSTRUED AS PERMISSION TO REPRODUCE FOR SALE IN WHOLE OR IN PART ANY DEVICES SHOWN THEREON.

LET	REVISION	DATE	BY
B	REDRAWN WITHOUT CHANGE	6-12-51	C.K.
A	REDRAWN & REVISED	8-9-43	RRF

PIPER AIRCRAFT CORP.
LOCK HAVEN, PENNA.

PART NO.	NO. REQ.	NAME / MATERIAL
-2	X	THIS PART OBSOLETE SEE DWG SAME NO. DATED 9-9-42
14172	1	LIFT STRUT FITTING
10541	1	PLATE

SCALE FULL SIZE — TOTAL WT.—LBS.

FINISH—PIPER SPECIFICATION # 10

MANUFACTURING PRACTICES—PIPER SPECIFICATION # 9

FITTING ASSEMBLY—FRONT SPAR LIFT STRUT

DRAFTSMAN	CHECKER	STANDARDS
R. FRANK 8-9-43	C. K. 8-11-43	

14192

5 5

A 585

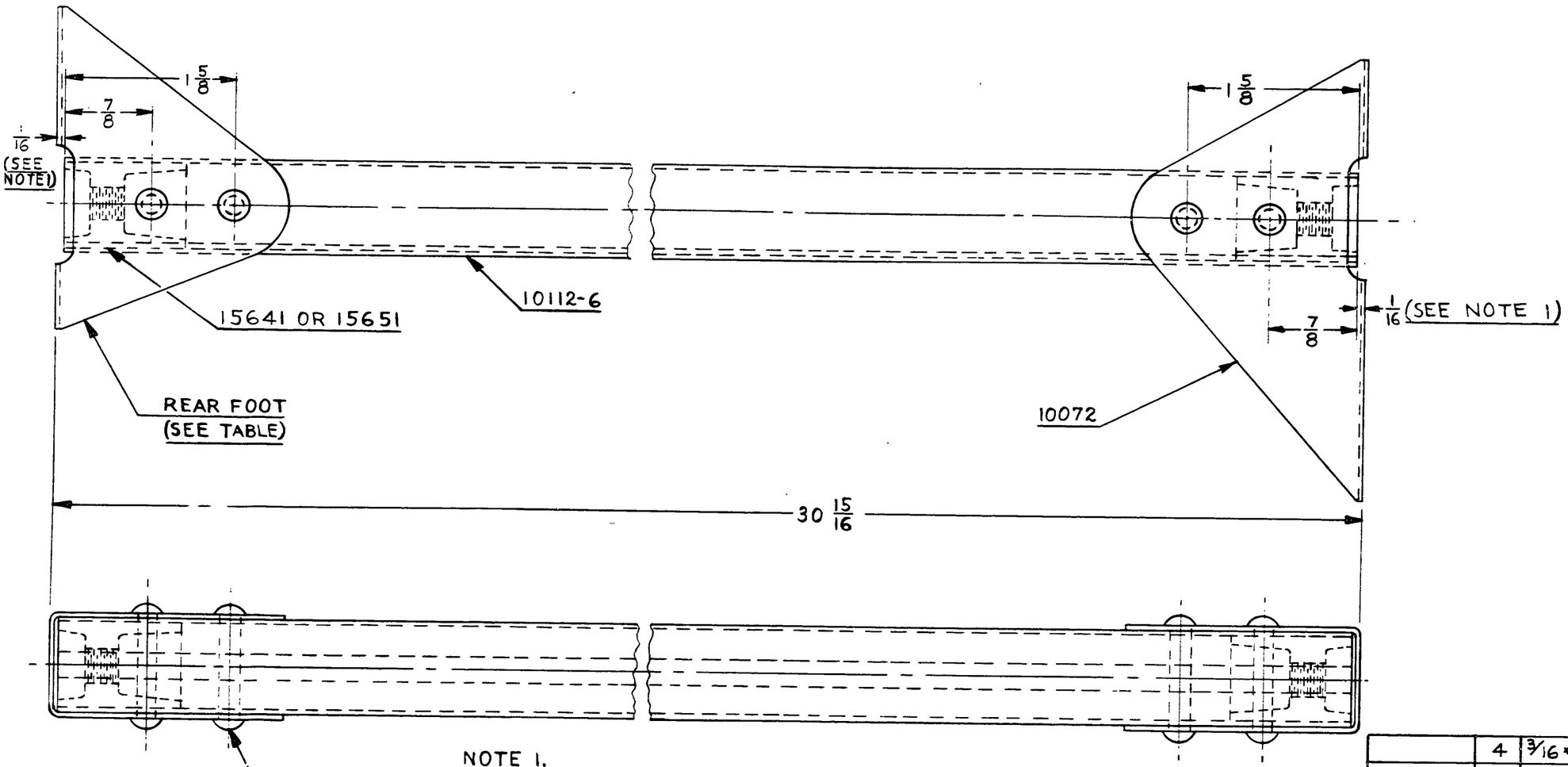

NOTE 1.

ENDS OF 10112-6 MAY BE MACHINED TO OBTAIN DIMENSIONS WHERE "SEE NOTE 1" IS INDICATED.

ASSY. NO.	REAR FOOT
14222	10062
14222-2	10062-2

PART NO.	NO. REQ.	SIZE	DESCRIPTION / MATERIAL
	4	3/16 x 1 1/8	53S-W ALUM. RD. HD. RIVET
15651 OR 15641	2		PLUG
10112-6	1		TUBE
10072	1		FRONT FOOT
10062-2 / 10062	1		REAR FOOT

SCALE FULL SIZE — TOTAL WT.—LBS.

FINISH—PIPER SPECIFICATION # 10

MANUFACTURING PRACTICES—PIPER SPECIFICATION # 9

MODEL	PER PLANE	NEXT ASSEMBLY	SUPERSEDES	SUP. BY

THIS DRAWING IS THE PROPERTY OF THE PIPER AIRCRAFT CORP. AND ITS POSSESSION BY UNAUTHORIZED PERSONS SHALL NOT BE CONSTRUED AS PERMISSION TO REPRODUCE FOR SALE IN WHOLE OR IN PART ANY DEVICES SHOWN THEREON.

LET	REVISION	DATE	BY
V	REDRAWN & REVISED	6-7-51	C.K.

PIPER AIRCRAFT CORP.
LOCK HAVEN, PENNA.

STRUT ASSEMBLIES—DRAG

DRAFTSMAN	CHECKER	STANDARDS
C. E. K. 6-7-51	H. R. K. 6-19-51	

14222

586

A 586

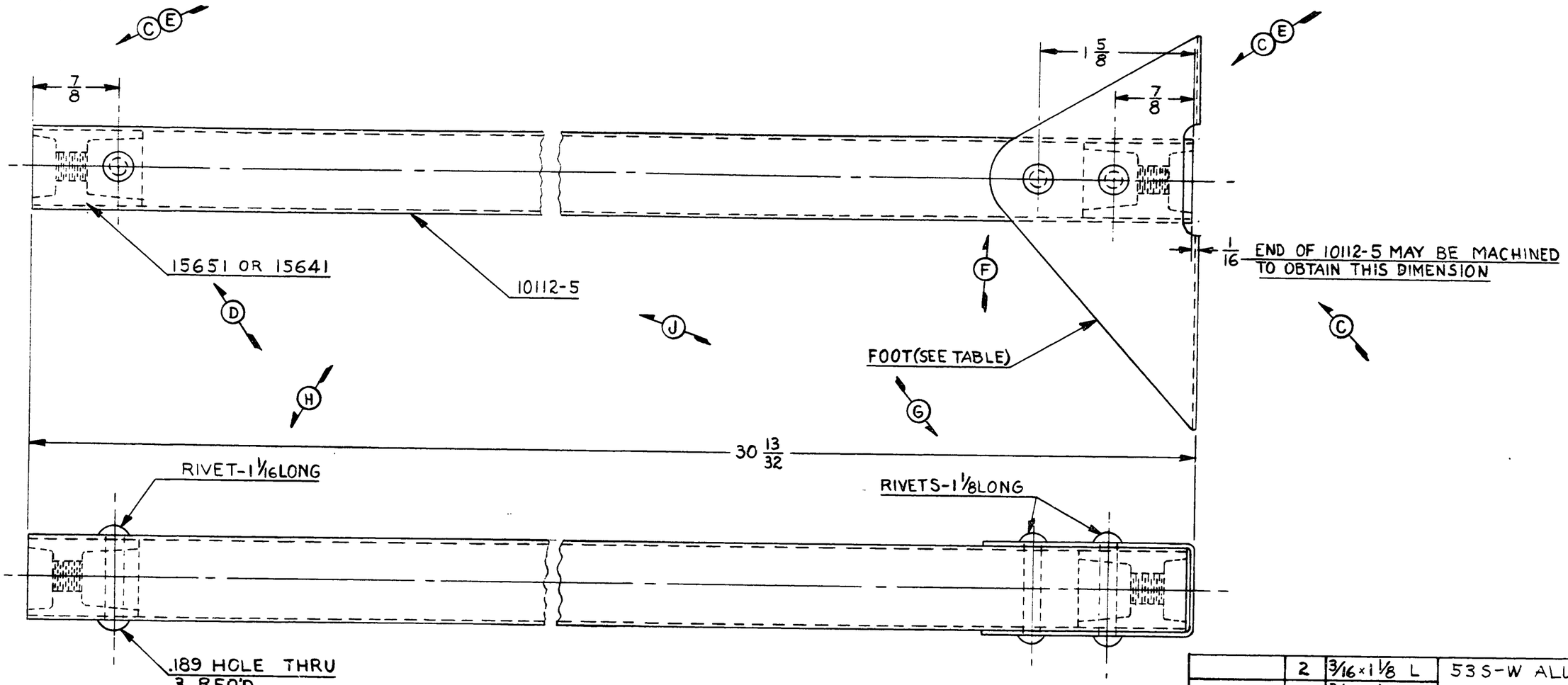

ASS'Y NO.	FOOT
14232	10072
14232-2	10072-2

M	REDRAWN WITHOUT CHANGE	6-11-51	C.K.						
L	- 2 ADDED	11-10-47	R.C.						
K	10112-11 REMOVED	8-21-46	B.C.						
J	10112-5 ALTERNATE ADDED	5-13-46	L.R.						
H	1 1/16 L. RIVET WAS 1 1/8 L	3-6-46	E.L.N.	L-4A	2	15556			
G	1 1/8 L. RIVET WAS 1 1/4 L	3-6-46	E.L.N.	J3	2	15556			
F	VIEW REVISED	3-6-46	E.L.N.	MODEL	PER PLANE	NEXT ASSEMBLY	SUPERSEDES	SUP. BY	
E	7/8 WAS .563	8-21-43	R.E.T.						
D	15651 WAS 12531; 15641 ALT. ADDED	8-21-43	R.E.T.						
C	1/16 DIM. & NOTE ADDED; .563 WAS 9/16	8-11-43	W.G.T.						
B	L-4B & T6-8 REF. REM'D.	6-28-43	C.K.						
A	J3, L-4A NEXT ASSY. 15556 WAS 14445	6-28-43	C.K.						
LET	REVISION	DATE	BY						

THIS DRAWING IS THE PROPERTY OF THE PIPER AIRCRAFT CORP. AND ITS POSSESSION BY UNAUTHORIZED PERSONS SHALL NOT BE CONSTRUED AS PERMISSION TO REPRODUCE FOR SALE IN WHOLE OR IN PART ANY DEVICES SHOWN THEREON.

PIPER AIRCRAFT CORP.
LOCK HAVEN, PENNA.

	NO. REQ.	SIZE	DESCRIPTION / MATERIAL
	2	3/16 × 1 1/8 L	53S-W ALUM.
	1	3/16 × 1 1/16 L	RD. HD. RIVET
15651 CR 15641	2		PLUG
10112-5	1		TUBE
10072-2 10072	1		FRONT FOOT(SEE TABLE)

PART NO.

SCALE FULL SIZE | TOTAL WT.—LBS.

FINISH—PIPER SPECIFICATION # 10

MANUFACTURING PRACTICES—PIPER SPECIFICATION # 9

STRUT ASSEMBLY— #1 DRAG

M. G. S.	McRAE		
9-9-42	10-21-42		**14232**
DRAFTSMAN	CHECKER	STANDARDS	

B

A587

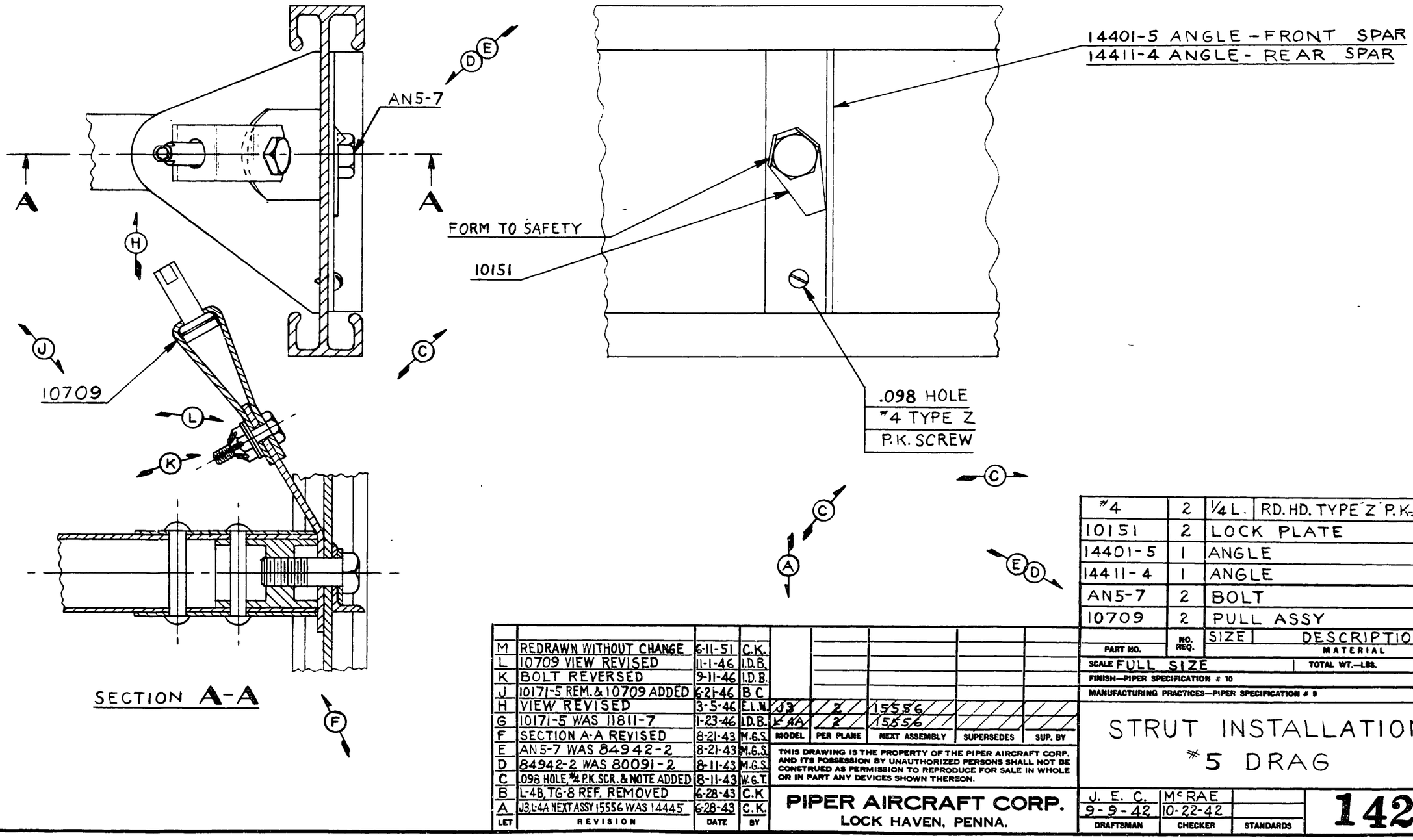

#4	2	1/4 L.	RD. HD. TYPE Z P.K. SCREW
10151	2	LOCK PLATE	
14401-5	1	ANGLE	
14411-4	1	ANGLE	
AN5-7	2	BOLT	
10709	2	PULL ASSY	
PART NO.	NO. REQ.	SIZE	DESCRIPTION MATERIAL

SCALE FULL SIZE | TOTAL WT.—LBS.

FINISH—PIPER SPECIFICATION # 10

MANUFACTURING PRACTICES—PIPER SPECIFICATION # 9

LET	REVISION	DATE	BY	MODEL	PER PLANE	NEXT ASSEMBLY	SUPERSEDES	SUP. BY
M	REDRAWN WITHOUT CHANGE	6-11-51	C.K.					
L	10709 VIEW REVISED	11-1-46	I.D.B.					
K	BOLT REVERSED	9-11-46	I.D.B.					
J	10171-5 REM. & 10709 ADDED	6-21-46	B C					
H	VIEW REVISED	3-5-46	E.L.N.	J3	2	15556		
G	10171-5 WAS 11811-7	1-23-46	I.D.B.	L-4A	2	15556		
F	SECTION A-A REVISED	8-21-43	M.G.S.					
E	AN5-7 WAS 84942-2	8-21-43	M.G.S.					
D	84942-2 WAS 80091-2	8-11-43	M.G.S.					
C	.098 HOLE, #4 P.K. SCR. & NOTE ADDED	8-11-43	W.G.T.					
B	L-4B, TG-8 REF. REMOVED	6-28-43	C.K.					
A	J3 L-4A NEXT ASSY 15556 WAS 14445	6-28-43	C.K.					

THIS DRAWING IS THE PROPERTY OF THE PIPER AIRCRAFT CORP. AND ITS POSSESSION BY UNAUTHORIZED PERSONS SHALL NOT BE CONSTRUED AS PERMISSION TO REPRODUCE FOR SALE IN WHOLE OR IN PART ANY DEVICES SHOWN THEREON.

PIPER AIRCRAFT CORP.
LOCK HAVEN, PENNA.

STRUT INSTALLATION — #5 DRAG

DRAFTSMAN	CHECKER	STANDARDS
J. E. C. 9-9-42	McRAE 10-22-42	

14242

588

A 588

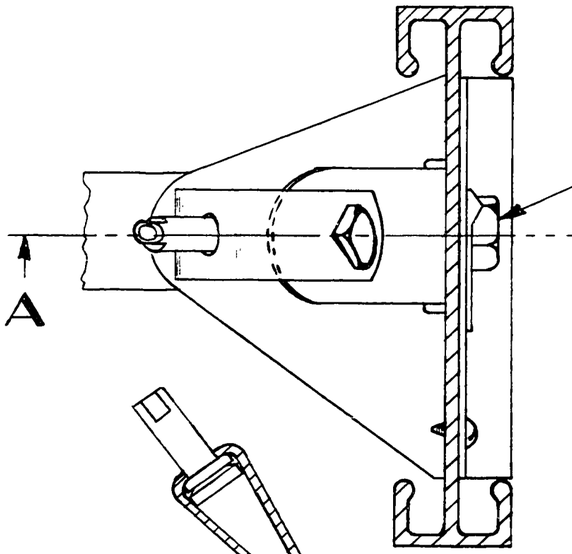

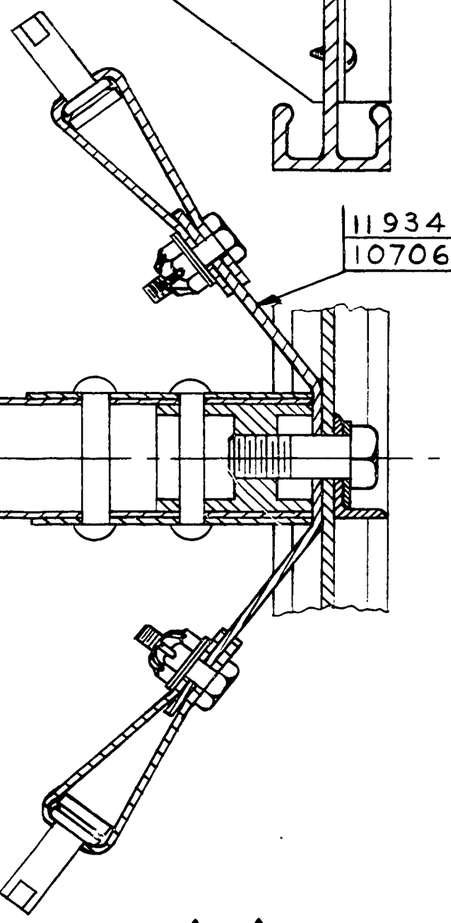

SECTION A-A

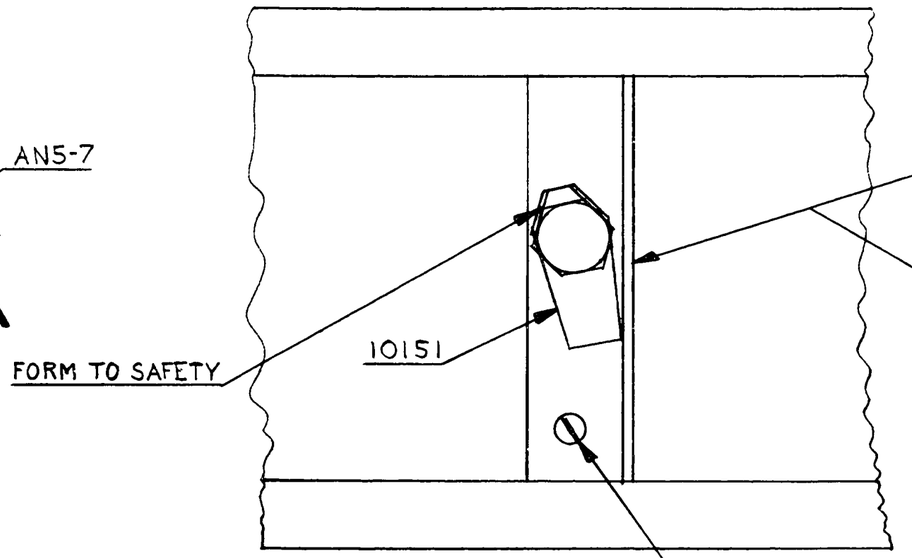

NOTE:
1. PULL ASS'Y 11934 USED IN PLACE OF 10706 ON PA-16 WING PANEL ASSY 11777-1.

PART NO.	NO. REQ.	SIZE	DESCRIPTION / MATERIAL
#4	2	1/4 L	RD. HD. TYPE Z P.K. SCREW
AN5-7	2		BOLT
14411-3 OR 14411-2	1		ANGLE
14401-4 OR 14401-3	1		ANGLE
11934	2		PULL ASSY. (SEE NOTE 1)
10706	2		PULL ASSY. (SEE NOTE 1)
10151	2		LOCK PLATE

SCALE FULL SIZE | TOTAL WT.—LBS.

FINISH—PIPER SPECIFICATION # 10

MANUFACTURING PRACTICES—PIPER SPECIFICATION # 9

STRUT INST.— #2 OR #3 DRAG

LET	REVISION	DATE	BY
N	REDRAWN & REVISED	6-11-51	C.K.

MODEL | PER PLANE | NEXT ASSEMBLY | SUPERSEDES | SUP. BY

THIS DRAWING IS THE PROPERTY OF THE PIPER AIRCRAFT CORP. AND ITS POSSESSION BY UNAUTHORIZED PERSONS SHALL NOT BE CONSTRUED AS PERMISSION TO REPRODUCE FOR SALE IN WHOLE OR IN PART ANY DEVICES SHOWN THEREON.

PIPER AIRCRAFT CORP.
LOCK HAVEN, PENNA.

DRAFTSMAN	CHECKER	STANDARDS
C. E. K. 6-11-51	H. R. K. 6-19-51	

14252

589

A 589

NOTE: THIS PART IDENTICAL TO PART 41251 EXCEPT FOR $\frac{.312}{.315}$ HOLE

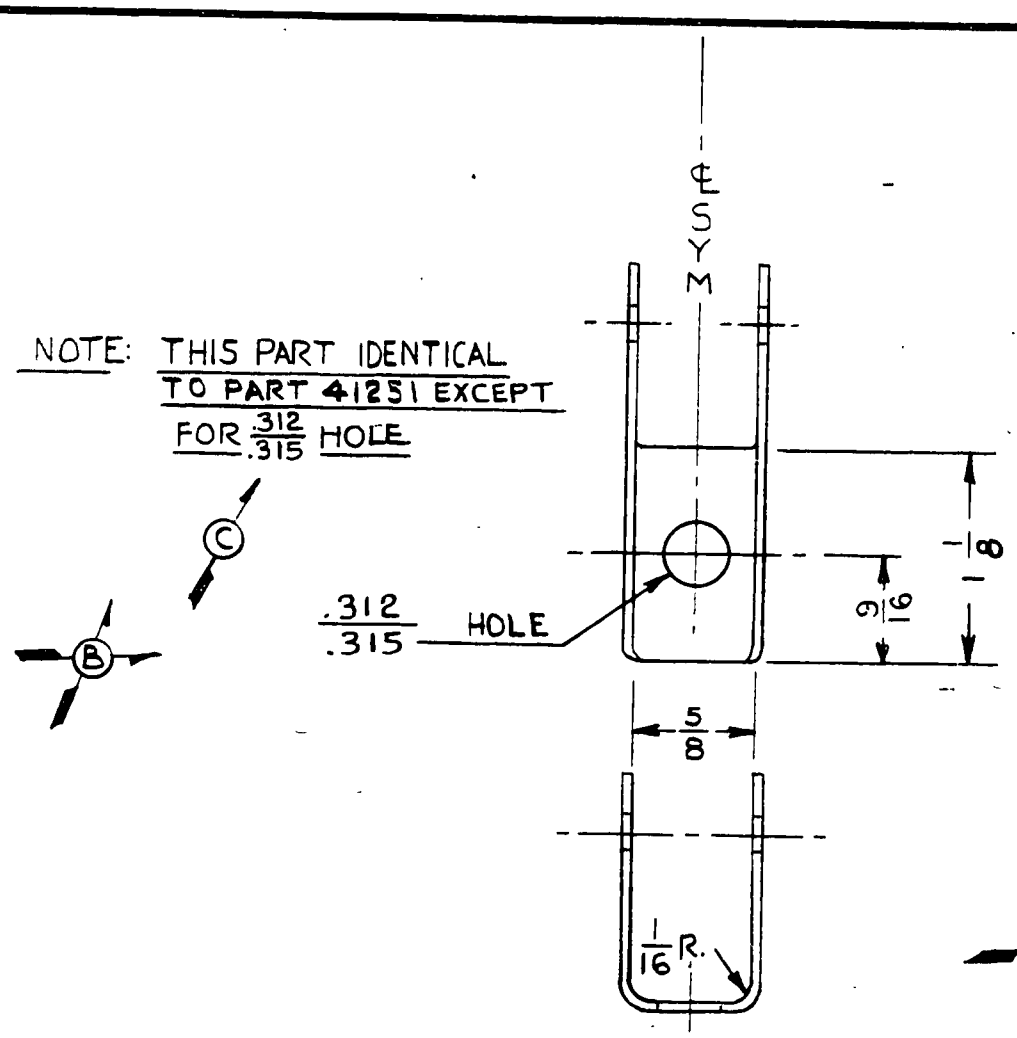

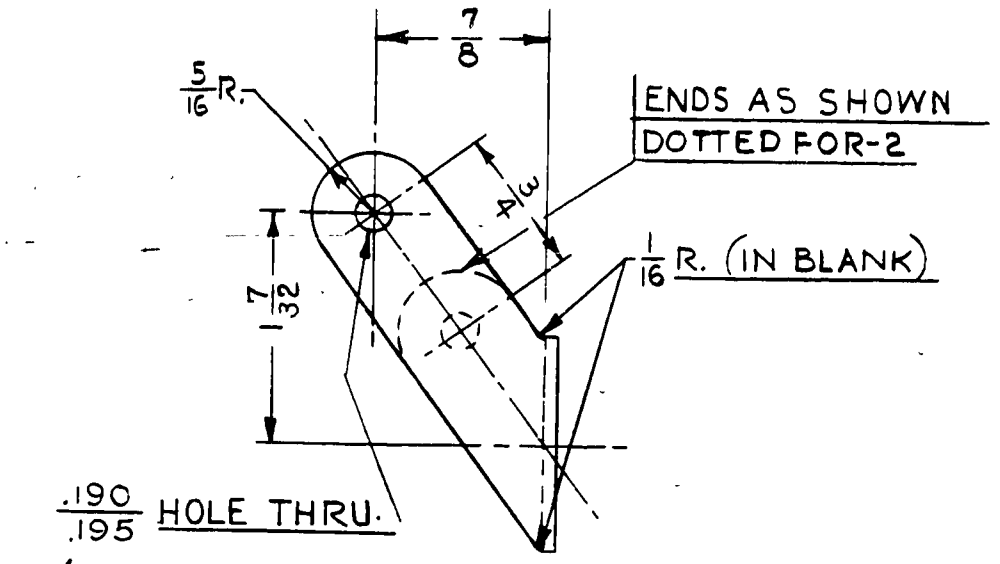

PART NO.	REMARKS
14261	SHOWN
14261-2	AS SHOWN DOTTED

Ⓓ

PART NO.	NO. REQ.	SIZE	MATERIAL
		.045 x 2 1/8 x 3 1/16	#1025 STEEL

SCALE FULL SIZE | TOTAL WT.—LBS.

FINISH—PIPER SPECIFICATION # 10

MANUFACTURING PRACTICES—PIPER SPECIFICATION # 9

FITTING—AILERON PULLEY BRACKET ATTACHMENT (UPPER)

MODEL	PER PLANE	NEXT ASSEMBLY	SUPERSEDES	SUP. BY
L-4A	2	14433		
J3	2	14439		

LET	REVISION	DATE	BY
E	REDRAWN WITHOUT CHANGE	6-12-51	I.M.M.
D	-2 ADDED	11-10-47	R.C.
C	.312/.315 WAS .312/.314	11-10-43	L.R.
B	TOLERENCE REVISED, NOTE ADDED	8-3-43	R.R.F.
A	L-4B & TG-8 REF. REMOVED	6-24-43	R.R.F.

THIS DRAWING IS THE PROPERTY OF THE PIPER AIRCRAFT CORP. AND ITS POSSESSION BY UNAUTHORIZED PERSONS SHALL NOT BE CONSTRUED AS PERMISSION TO REPRODUCE FOR SALE IN WHOLE OR IN PART ANY DEVICES SHOWN THEREON.

PIPER AIRCRAFT CORP.
LOCK HAVEN, PENNA.

DRAFTSMAN	CHECKER	STANDARDS
J.E.C 9-10-42	L.E.K. 10-23-42	

14261

A

A

172

A 172

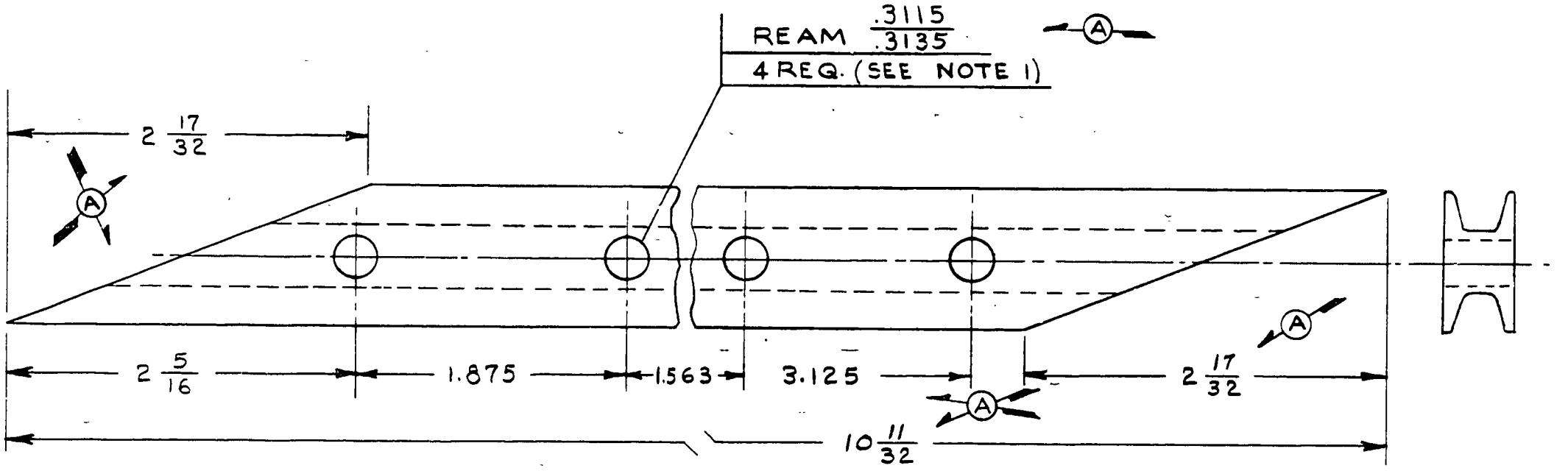

NOTE 1:
HOLES MUST COINCIDE WITH RELATED HOLES IN 14453 & 14182.

				MODEL	PER PLANE	NEXT ASSEMBLY	SUPERSEDES	SUP. BY
				L-4A	4	14283		
				J3	4	14283		
E	REDRAWN WITHOUT CHANGE	6-11-51	I.M.M.					
D	.469 +.006 −.015 DIM. REMOVED	8-23-43	M.G.S.					
C	SPEC. REVISED TO INCLUDE 84931	8-6-43	J.E.C.					
B	L-4B & TG-6 REF. REMOVED	6-24-43	R.R.F.					
A	DIM. REVISED & NOTE ADDED	6-11-43	C.K.					
LET	REVISION	DATE	BY					

THIS DRAWING IS THE PROPERTY OF THE PIPER AIRCRAFT CORP. AND ITS POSSESSION BY UNAUTHORIZED PERSONS SHALL NOT BE CONSTRUED AS PERMISSION TO REPRODUCE FOR SALE IN WHOLE OR IN PART ANY DEVICES SHOWN THEREON.

PIPER AIRCRAFT CORP.
LOCK HAVEN, PENNA.

84931	DWG. REF. ONLY	FILLER BLOCK SECTION
		10 11/32 L. — PIPER SECT. 84931
PART NO.	NO. REQ.	SIZE — DESCRIPTION
		MATERIAL
SCALE FULL SIZE		TOTAL WT.—LBS.
FINISH—PIPER SPECIFICATION # 10		
MANUFACTURING PRACTICES—PIPER SPECIFICATION # 9		

BLOCK — REAR SPAR LIFT STRUT FITTING FILLER

C.E.K.	McRAE		14271
9-8-42	10-22-42		
DRAFTSMAN	CHECKER	STANDARDS	

A 173

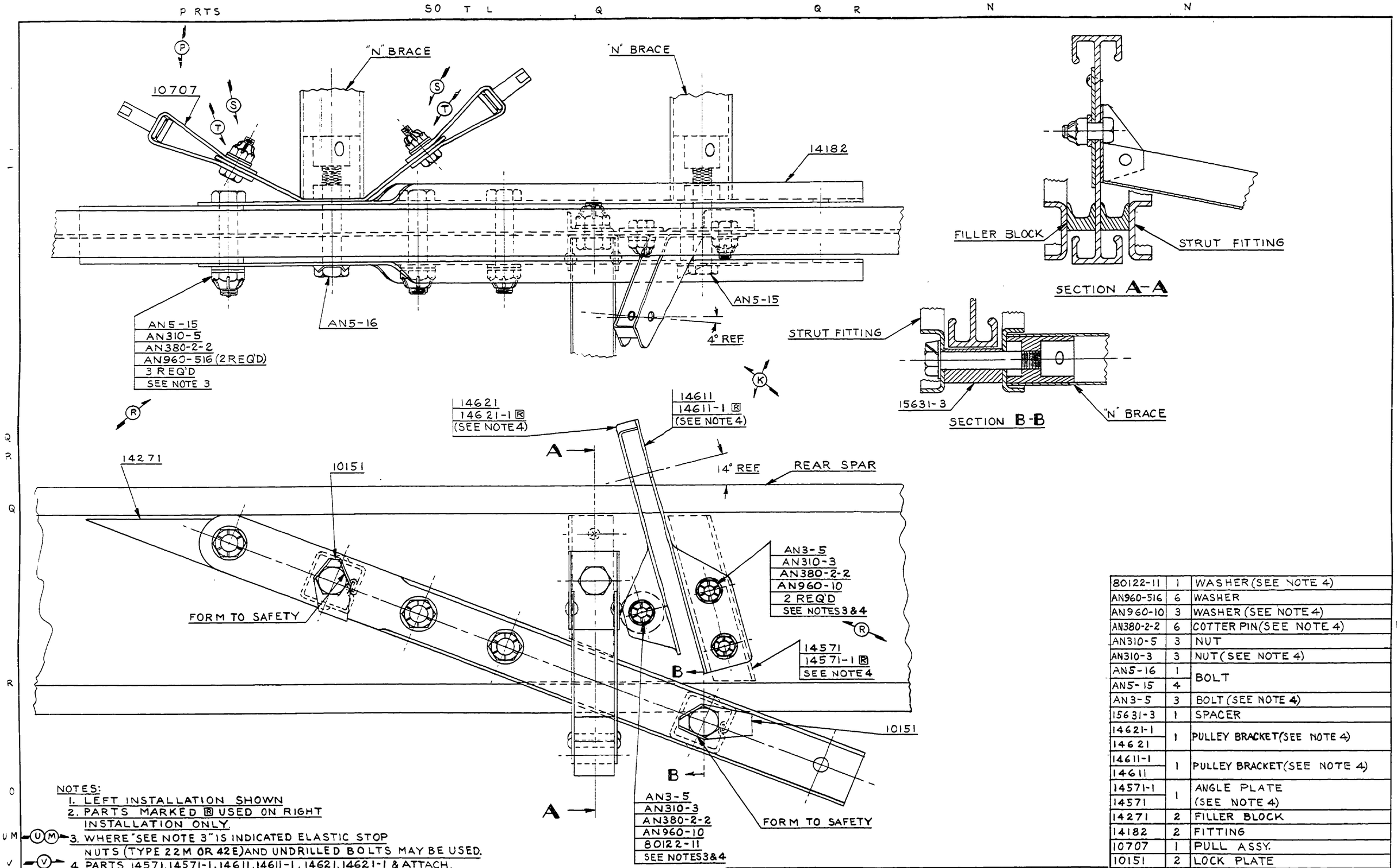

NOTES:
1. LEFT INSTALLATION SHOWN
2. PARTS MARKED R USED ON RIGHT INSTALLATION ONLY.
3. WHERE "SEE NOTE 3" IS INDICATED ELASTIC STOP NUTS (TYPE 22M OR 42E) AND UNDRILLED BOLTS MAY BE USED.
4. PARTS 14571, 14571-1, 14611, 14611-1, 14621, 14621-1 & ATTACH. NOT USED ON MODEL PA-15.

PART No.	No. REQ.	SIZE / MATERIAL	DESCRIPTION
80122-11	1	WASHER (SEE NOTE 4)	
AN960-516	6	WASHER	
AN960-10	3	WASHER (SEE NOTE 4)	
AN380-2-2	6	COTTER PIN (SEE NOTE 4)	
AN310-5	3	NUT	
AN310-3	3	NUT (SEE NOTE 4)	
AN5-16	1	BOLT	
AN5-15	4		
AN3-5	3	BOLT (SEE NOTE 4)	
15631-3	1	SPACER	
14621-1 / 14621	1	PULLEY BRACKET (SEE NOTE 4)	
14611-1 / 14611	1	PULLEY BRACKET (SEE NOTE 4)	
14571-1 / 14571	1	ANGLE PLATE (SEE NOTE 4)	
14271	2	FILLER BLOCK	
14182	2	FITTING	
10707	1	PULL ASSY.	
10151	2	LOCK PLATE	

SCALE FULL SIZE — TOTAL WT.—LBS.
FINISH—PIPER SPECIFICATION #10
MANUFACTURING PRACTICES—PIPER SPECIFICATION #9

LET.	REVISION	DATE	BY
V	NOTE 4 ADDED	11-10-47	R.C.
U	NOTE 3 REVISED	1-2-47	I.M.M.
T	10707 VIEW REVISED	11-1-46	I.D.B.
S	BOLTS REVERSED	9-13-46	I.D.B.
R	REF. TO NOTE 3 ADD.	7-1-46	R.D.M.
Q	80012-3, 80421 & ATTACH. REM.	7-1-46	R.D.M.
P	10707 ADDED	6-20-46	B.C.
O	10161-5 & 10912-6 REM.	6-20-46	B.C.
N	14291, 14291-1 & ATTACH. REM.	6-20-46	B.C.
M	NOTE 3 ADDED	6-19-46	C.E.K.
L	10161-5 WAS 11801-7	1-23-46	I.D.B.
K	14° & 4° REF. ANGLES ADDED	10-30-43	R.E.S.
J	REDRAWN & REVISED	8-24-43	R.R.F.
W	REDRAWN WITHOUT CHANGE	6-13-51	C.K.

THIS DRAWING IS THE PROPERTY OF THE PIPER AIRCRAFT CORP. AND ITS POSSESSION BY UNAUTHORIZED PERSONS SHALL NOT BE CONSTRUED AS PERMISSION TO REPRODUCE FOR SALE, IN WHOLE OR IN PART, ANY DEVICES SHOWN THEREON

MODEL	PER PLANE	NEXT ASSEMBLY	SUPERSEDES	SUP. BY
L-4A	L/R	15556		
J-3	L/R	15556		

PIPER AIRCRAFT CORP.
LOCK HAVEN, PENNA.

FITTING INSTALLATION — REAR SPAR LIFT STRUT

DRAFTSMAN	CHECKER	STANDARDS
R. FRANK 8-24-43	C. K. 8-24-43	

14283

787

A787

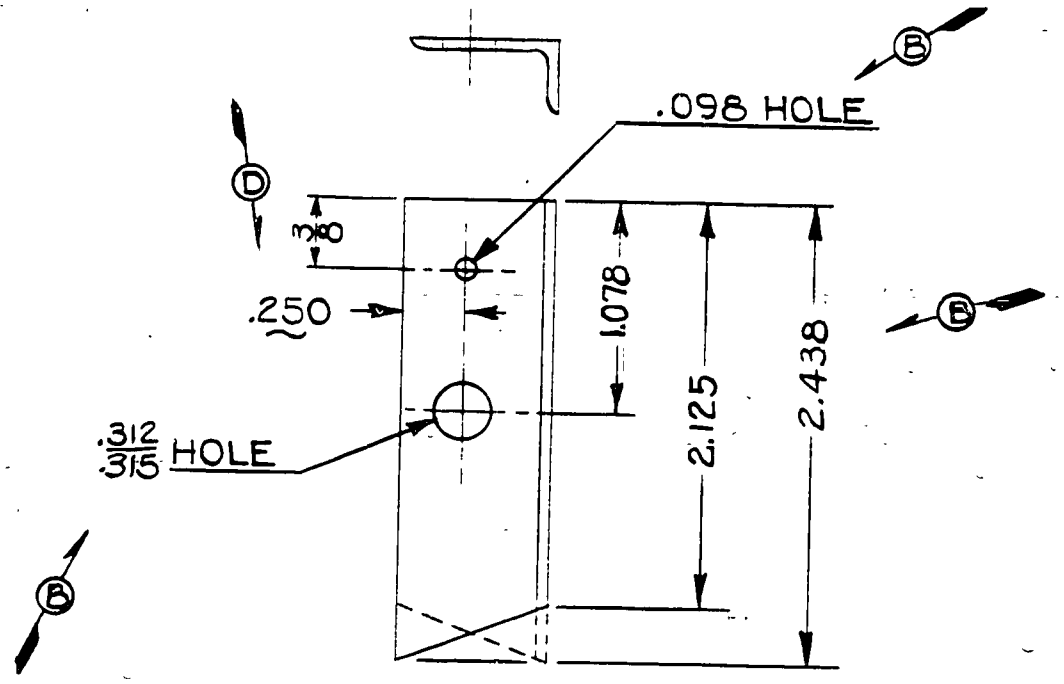

14291 L.H. (END SHOWN SOLID)
14291-1 R.H. (END SHOWN DOTTED)

©

A

LET	REVISION	DATE	BY
F	REDRAWN WITHOUT CHANGE	6-12-51	I.E.M.
E	U3.N.A.15556 WAS 14283	6-20-46	BC
D	.250 WAS 5/16	3-5-45	E.L.N.
C	SPEC. REVISED TO INCLUDE 84921	8-12-43	W.G.T.
B	DIM'S. REVISED. 098 HOLE ADDED	8-12-43	W.G.T.
A	L-4B; TG-8 REF. REMOVED	6-25-43	R.R.E.

MODEL	PER PLANE	NEXT ASSEMBLY	SUPERSEDES	SUP. BY
L-4A	N.-1R	14283		
U3	N.-1R	15556		

THIS DRAWING IS THE PROPERTY OF THE PIPER AIRCRAFT CORP. AND ITS POSSESSION BY UNAUTHORIZED PERSONS SHALL NOT BE CONSTRUED AS PERMISSION TO REPRODUCE FOR SALE IN WHOLE OR IN PART ANY DEVICES SHOWN THEREON.

PIPER AIRCRAFT CORP.
LOCK HAVEN, PENNA.

A

PART NO.	NO. REQ.	SIZE	DESCRIPTION / MATERIAL
84921	DWG. REF. ONLY	27/16L.	ANGLE SECTION — PIPER SECT. 84921

SCALE FULL SIZE — TOTAL WT.—LBS.
FINISH—PIPER SPECIFICATION # 10
MANUFACTURING PRACTICES—PIPER SPECIFICATION # 9

ANGLE – CENTER AILERON HINGE BRACKET ATTACHMENT

DRAFTSMAN	CHECKER	STANDARDS
C.E.K. 9-25-42	L.E.K. 10-22-42	

14291

174

A 174

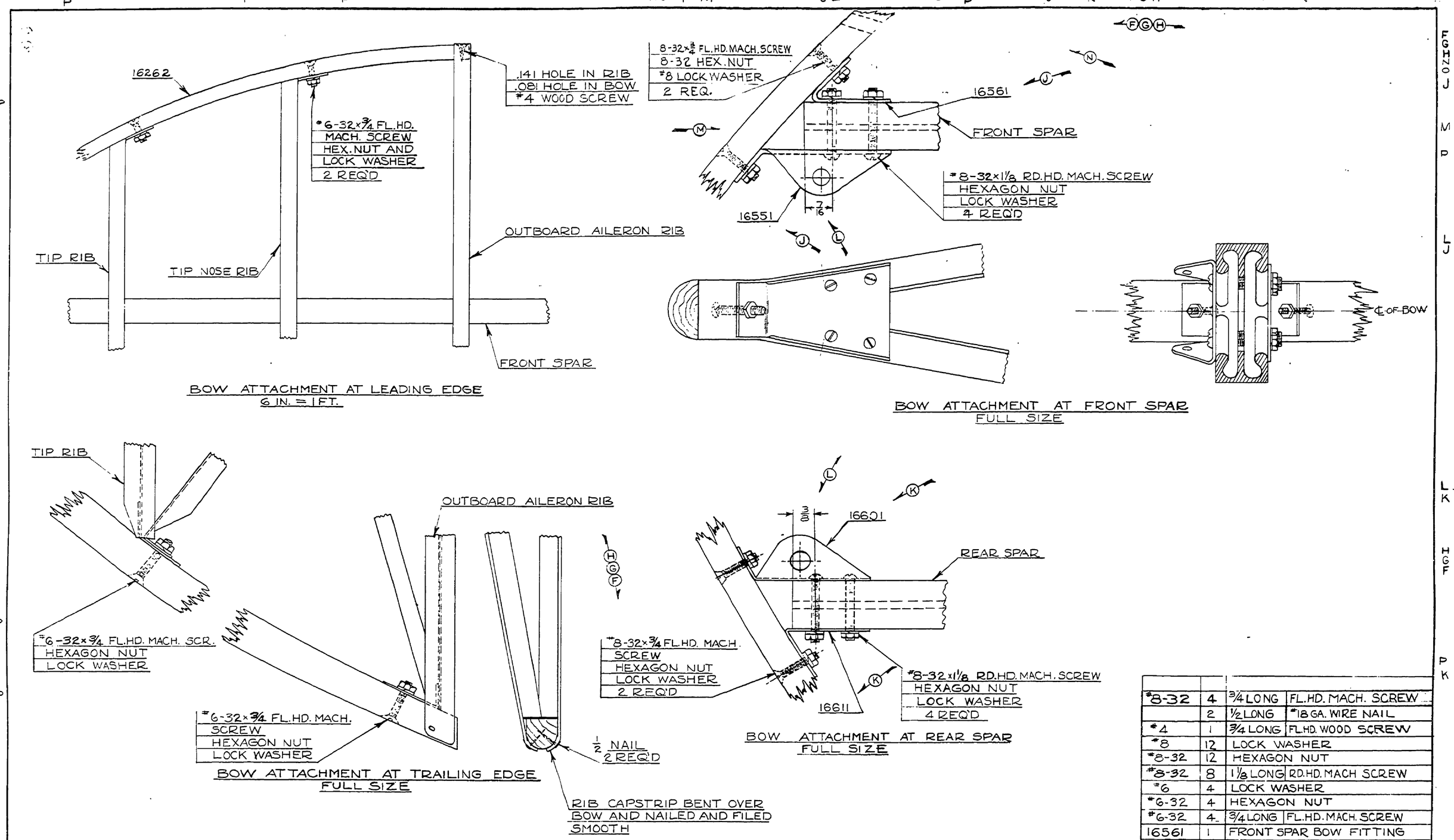

NOTES:
1. LEFT INSTALLATION SHOWN
2. SPAR TIPS TRIMMED TO FIT TIP BOW

PART No.	No. REQ.	SIZE	DESCRIPTION
#8-32	4	3/4 LONG	FL.HD. MACH. SCREW
	2	1/2 LONG	#18 GA. WIRE NAIL
#4	1	3/4 LONG	FL.HD. WOOD SCREW
#8	12	LOCK WASHER	
#8-32	12	HEXAGON NUT	
#8-32	8	1 1/8 LONG	RD.HD. MACH SCREW
#6	4	LOCK WASHER	
#6-32	4	HEXAGON NUT	
#6-32	4	3/4 LONG	FL.HD. MACH. SCREW
16561	1	FRONT SPAR BOW FITTING	
16551	1	FRONT SPAR BOW FITTING	
16262	1	BOW	
16601	1	REAR SPAR BOW FITTING	
16611	1	REAR SPAR BOW FITTING	

MATERIAL

SCALE FULL SIZE & NOTED | TOTAL WT. - LBS.

FINISH

LIMITS, SHOP PRACTICES AND FINISH, UNLESS OTHERWISE NOTED, TO BE IN ACCORDANCE WITH PIPER SPECIFICATIONS #9 AND #10.

LET.	REVISION	DATE	BY
P	.141 & .166 HOLE REF. REM.	10-2-46	C.E.K.
O	10128-29 REMOVED	6-4-46	HMZ
N	10128-29 ADDED	4-10-46	C.E.K.
M	SPAR END REVISED	2-8-46	B.C.
L	3/8 WAS 1/4 & 7/16 ADDED	2-8-46	B.C.
K	16601 WAS 10971 & 16611 WAS 10961	2-8-46	B.C.
J	16551 WAS 15781 & 16561 WAS 15791	2-8-46	B.C.
H	4 OF #8-32×3/4 L. WAS #6-32×3/4 L MACH. SCR. NUT & LOCK WASHER	2-8-46	B.C.
G	C'SK. 82° × .320 WAS 82° × 17/64	2-8-46	B.C.
F	.166 HOLE WAS .141	2-8-46	B.C.
E	REDRAWN & REVISED	10-2-43	R.F.

MODEL	PER SHIP	NEXT ASSEMBLY	SUPERSEDES	SUP. BY
L-4A	2	15556		
J3	2	15556		

PIPER AIRCRAFT CORP.
LOCK HAVEN, PENNA.

BOW INSTALLATION—
WING TIP

DRAWN	CHECKED	APPROVED
R. FRANK 10-2-43	C.K. 10-29-43	

14323

A788

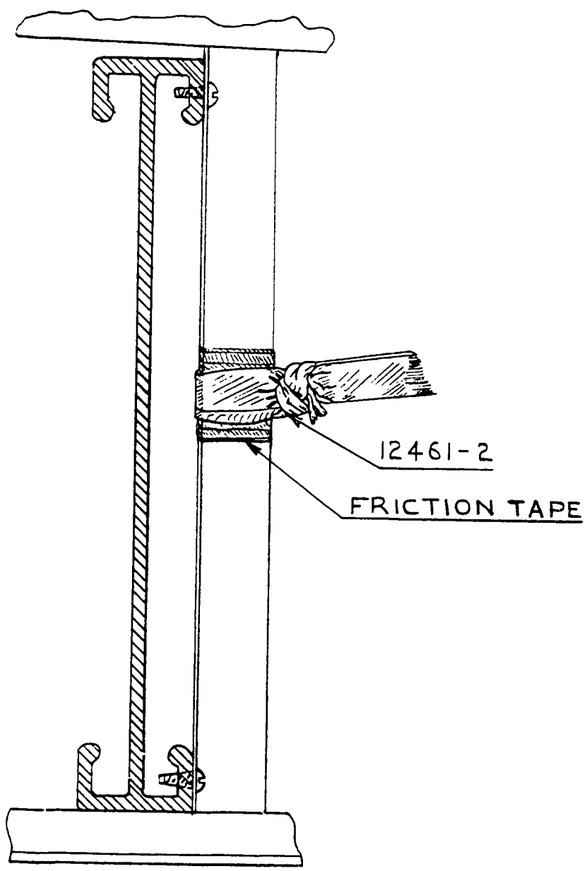

FIG. 1
FULL SIZE

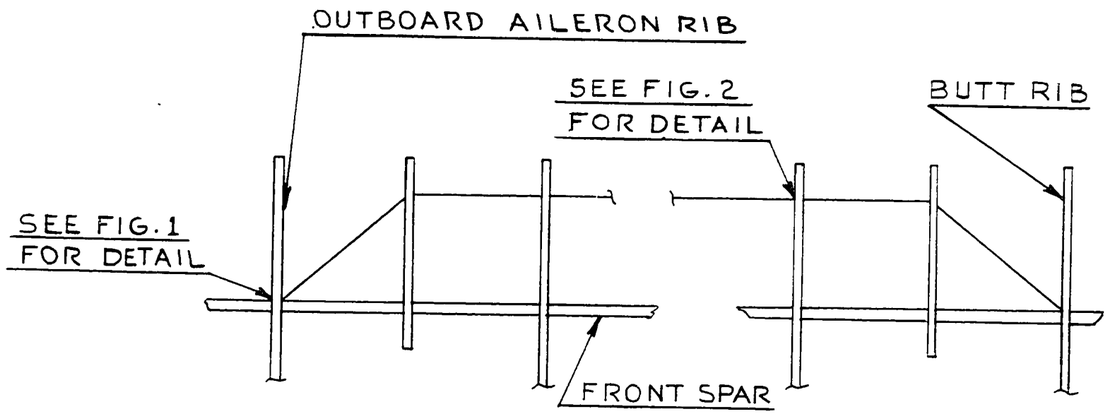

TOP VIEW OF WING PANEL

FRONT OF AIRPLANE

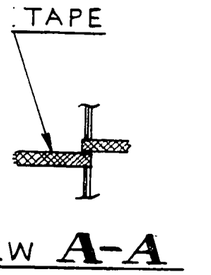

VIEW A-A

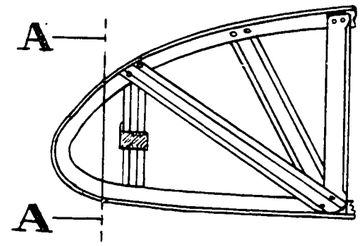

FIG. 2
3 IN. = 1 FT.

NOTE:
FRICTION TAPE APPLIED AS A BASE OVER WHICH COTTON TAPE IS WRAPPED & TIED.

THIS DRAWING IS THE PROPERTY OF THE PIPER AIRCRAFT CORP. AND ITS POSSESSION BY UNAUTHORIZED PERSONS SHALL NOT BE CONSTRUED AS PERMISSION TO REPRODUCE FOR SALE, IN WHOLE OR IN PART, ANY DEVICES SHOWN THEREON

LET.	REVISION	DATE	BY
D	REDRAWN & REVISED	6-12-51	I.M.M.

MODEL	PER PLANE	NEXT ASSEMBLY	SUPERSEDES	SUP. BY

PIPER AIRCRAFT CORP.
LOCK HAVEN, PENNA.

PART No.	No. REQ.	SIZE	DESCRIPTION / MATERIAL
12461-2	1	COTTON HERRINGBONE TAPE	
	2	4 LONG	FRICTION TAPE

SCALE 1 1/2 IN. = 1 FT. & NOTED — TOTAL WT.—LBS.
FINISH—PIPER SPECIFICATION #10
MANUFACTURING PRACTICES—PIPER SPECIFICATION #9

TAPE INSTALLATION — WING RIB NOSE

DRAFTSMAN	CHECKER	STANDARDS
I.M.M. 6-12-51	H.R.K. 6-22-51	

14351

590

A 590

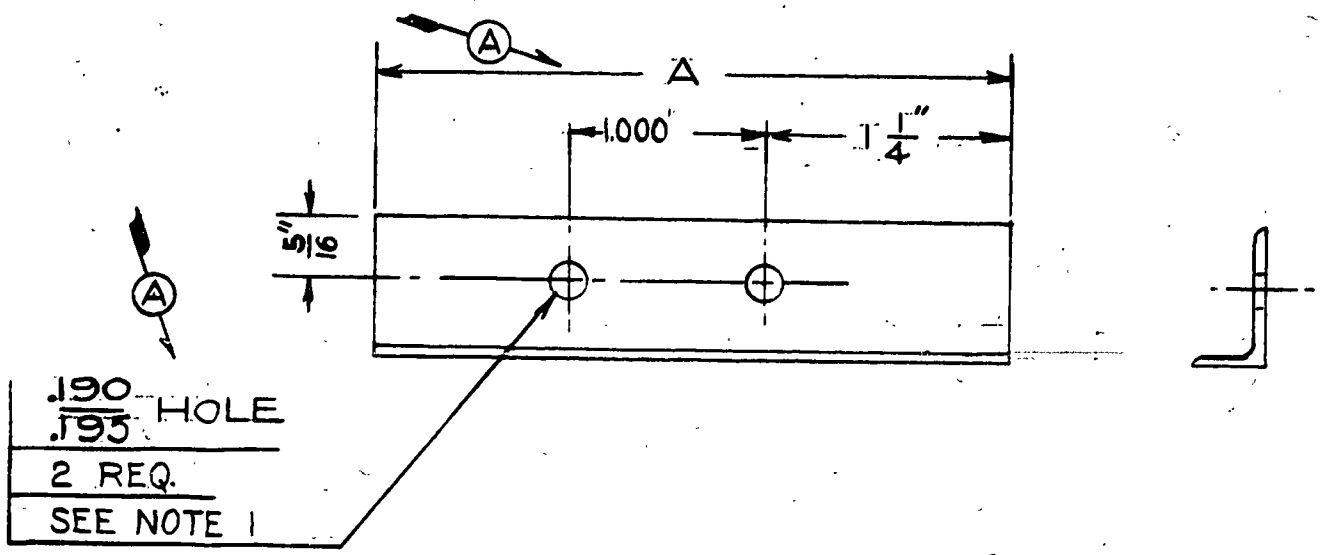

PART NO.	A	PER SHIP
14361-2	2 7/8"	2
14361-3	4 1/2"	2

NOTE 1.

HOLES IN -2 MUST COINCIDE WITH RELATED HOLES IN 14371-2 & 14453.

HOLES IN -3 MUST COINCIDE WITH RELATED HOLES IN 12581, 14371-3 & 14383

D LIMITS, SHOP PRACTICES AND FINISH, UNLESS OTHERWISE NOTED, TO BE IN ACCORDANCE WITH PIPER SPECIFICATIONS #9 AND #10.

LET.	REVISION	DATE	SR.	BY
D	J3, L4A NEXT ASSY. 15556 WAS 14421	8-7-43		M.G.S.
C	SPEC. REVISED TO INCLUDE 84921	8-6-43		I.O.B.
B	L-4B & TG-8 REF. REMOVED	6-25-43		RRF.
A	TOL'S. REVISED & NOTE 1 ADDED	6-16-43		C.K.

MODEL	PER SHIP	NEXT ASSEMBLY	SUPERSEDES	SUPERSEDED BY
L-4A	NOTED	15556		
J3	NOTED	15556		

PIPER AIRCRAFT CORP.
LOCK HAVEN, PENNA.

NO. 196-M ALBANENE A. & B. SMITH CO., PGH., PA.

84921	DWG. REF. ONLY	ANGLE SECTION
		NOTED — PIPER SECTION 84921
PART No.	No. REQ.	SIZE / DESCRIPTION / MATERIAL

SCALE FULL SIZE & NOTED

ANGLE - JURY STRUT FITTING ATTACHMENT

C.E.K.	L.E.K.	
9-25-42	10-28-42	
DRAWN	CHECKED	APPROVED

14361

FOR METAL SPAR WING

A 175

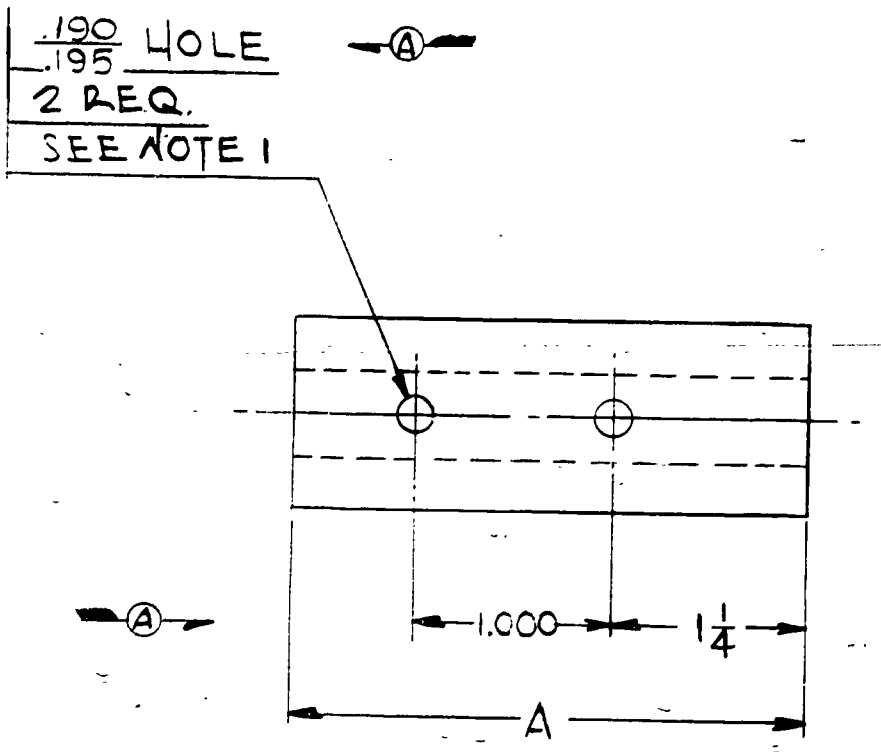

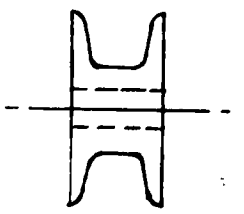

PART NO.	"A"	PER SHIP
14371-2	2 7/8	2
14371-3	4 1/2	2

NOTE 1.
HOLES IN -2 MUST COINCIDE WITH RELATED HOLES IN 14361-2 & 14453.
HOLES IN -3 MUST COINCIDE WITH RELATED HOLES IN 12581, 14361-3, & 14383.

LET	REVISION	DATE	BY
E	REDRAWN WITHOUT CHANGE	6-11-51	M.G.
D	J3, L-4A NEXT ASSY. 15556 WAS 14421	8-7-43	M.G.S.
C	SPEC. REV. TO INCLUDE B4931	8-5-43	I.D.B.
B	L-4B & TG-8 REF. REMOVED	6-25-43	R.R.F.
A	TOL'S, REV. & NOTE 1 ADDED	6-16-43	C.H.

MODEL	PER PLANE	NEXT ASSEMBLY	SUPERSEDES	SUP. BY
L-4A	NOTED	15556		
J3	NOTED	15556		

THIS DRAWING IS THE PROPERTY OF THE PIPER AIRCRAFT CORP. AND ITS POSSESSION BY UNAUTHORIZED PERSONS SHALL NOT BE CONSTRUED AS PERMISSION TO REPRODUCE FOR SALE IN WHOLE OR IN PART ANY DEVICES SHOWN THEREON.

PIPER AIRCRAFT CORP.
LOCK HAVEN, PENNA.

PART NO.	NO. REQ.	SIZE	DESCRIPTION / MATERIAL
84391	DWG. REF ONLY		FILLER BLOCK SECTION
		NOTED	PIPER SECTION 84931

SCALE FULL SIZE | TOTAL WT.—LBS.
FINISH—PIPER SPECIFICATION # 10
MANUFACTURING PRACTICES—PIPER SPECIFICATION # 9

BLOCK – JURY STRUT FITTING FILLER

DRAFTSMAN	CHECKER	STANDARDS
M.G.S. 9-28-42	L.E.K. 10-23-42	

14371

176

A 176

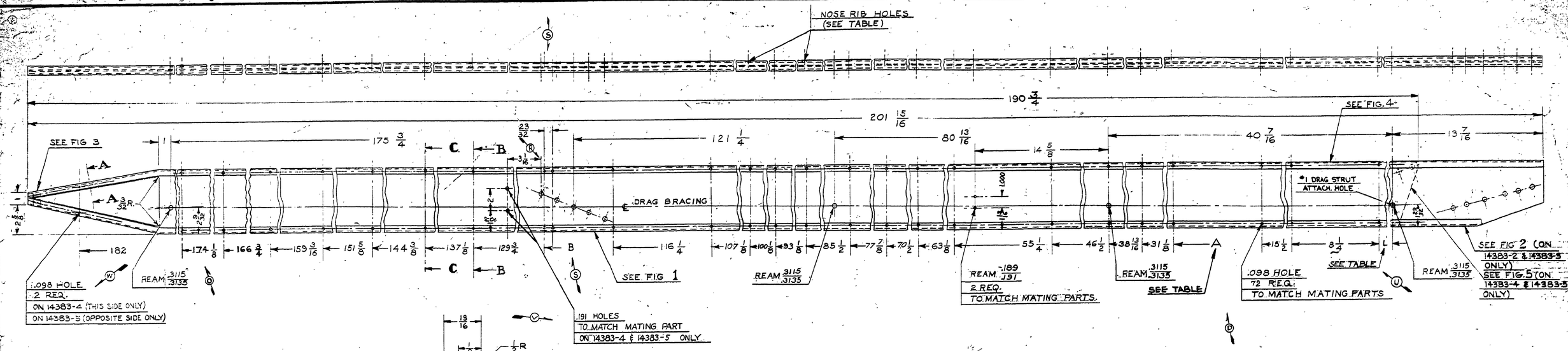

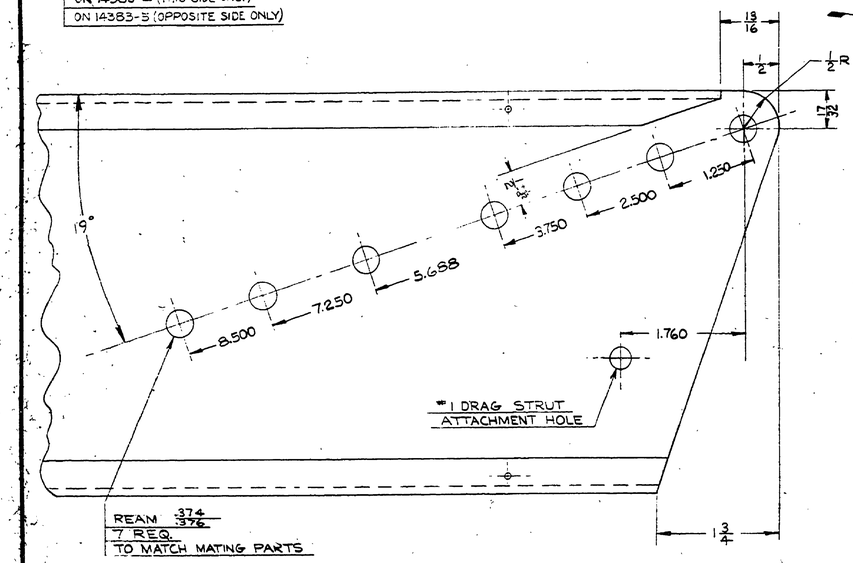

FIG. 5
SPAR END DETAIL
(ON 14383-4 & 14383-5 ONLY)
FULL SIZE

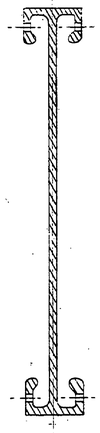

SECTION C-C
FULL SIZE

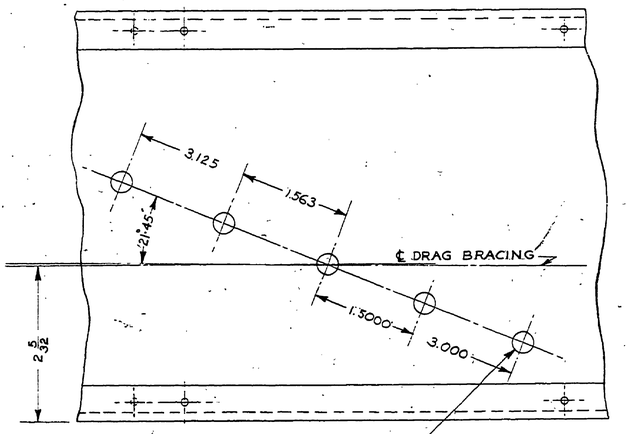

FIG. 1
FULL SIZE

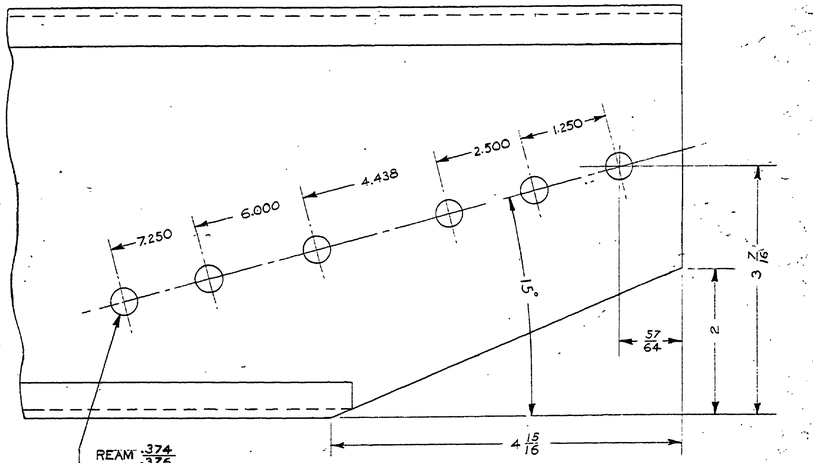

FIG. 2
FULL SIZE
SPAR END DETAIL
(ON 14383-2 & 14383-3 ONLY)

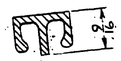

SECTION A-A
FULL SIZE

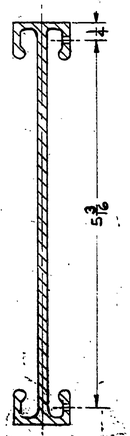

SECTION B-B
FULL SIZE

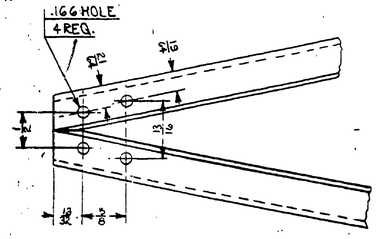

FIG. 3
DRILLING DETAIL
FULL SIZE

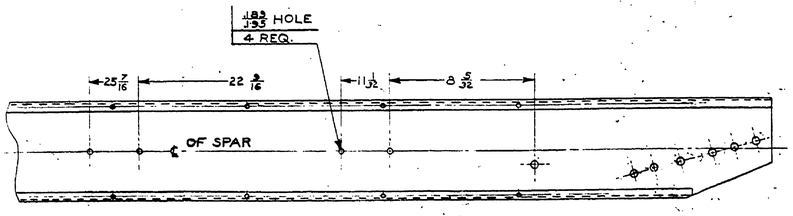

FIG. 4
FUEL TANK STRAP HOLE LOCATION DETAIL (-2, -4 & -5 ONLY)

PART NO.	L	A	B	REMARKS	MODEL	PER PLANE	NEXT ASSEMBLY
14383-2	1 5/8	23	122 3/16	NOSE RIB HOLES LOCATED AS SHOWN	J3	1	15336
14383-3	7/8	23 5/16	123 1/8	NOSE RIB HOLES LOCATED IN OPPOSITE SIDE OF SPAR CAPSTRIP	J4	1	15336
14383-4	1 5/8	23	122 3/16	NOSE RIB HOLES LOCATED AS SHOWN			
14383-5	7/8	23 5/16	123 1/8	NOSE RIB HOLES LOCATED IN OPPOSITE SIDE OF SPAR CAPSTRIP			

W	2 OF .098 HOLES ADDED	6-25-50	FCS
V	2 OF .191 HOLES ADDED	6-21-50	FCS
U	B & WAS 7	5-1-50	C.K.
T	FOR TANK STRAP HOLES ADD FOR -5	2-23-50	C.K.
S	4 OF .098 HOLES REAM, 'D' DIM. TAB.	1-16-48	K.D.
R	4 OF .098 HOLES ADDED	12-12-49	K.D.
Q	-C-, -5, FIG. 3 ADDED	3-24-49	K.D.
P	'A' WAS 23	2-23-49	K.D.
O	2 OF .098 HOLES ADDED	8-3-48	K.D.
N	REDRAWN & REVISED	11-25-47	K.D.
LTR.	REVISION	DATE	BY

THIS DRAWING IS THE PROPERTY OF THE PIPER AIRCRAFT CORP. AND ITS POSSESSION BY UNAUTHORIZED PERSONS SHALL NOT BE CONSTRUED AS PERMISSION TO REPRODUCE FOR SALE, IN WHOLE OR IN PART, ANY DEVICES SHOWN THEREON.

MODEL	PER PLANE	NEXT ASSEMBLY	SUPERSEDES	SUP. BY

PIPER AIRCRAFT CORP.
LOCK HAVEN, PENNA.

10741	NEW	SPAR SECTION	
	REVISED	NOTED	PIPER SEC. 10741
PART NO.	REQ'D	SIZE	DESCRIPTION
		MATERIAL	
SCALE 3 IN. = 1 FT. & NOTED		TOTAL WT.—LBS.	
FINISH—PIPER SPECIFICATION #10			
MANUFACTURING PRACTICES—PIPER SPECIFICATION #8			

SPAR – FRONT

DRAWN	DATE
R. D. M.	6-22-46
DRAFTSMAN	CHECKER	STANDARDS
	6-26-46	

14383

A878

Limits and shop practices, unless otherwise noted, to be in accordance with Piper Specification #9&#10

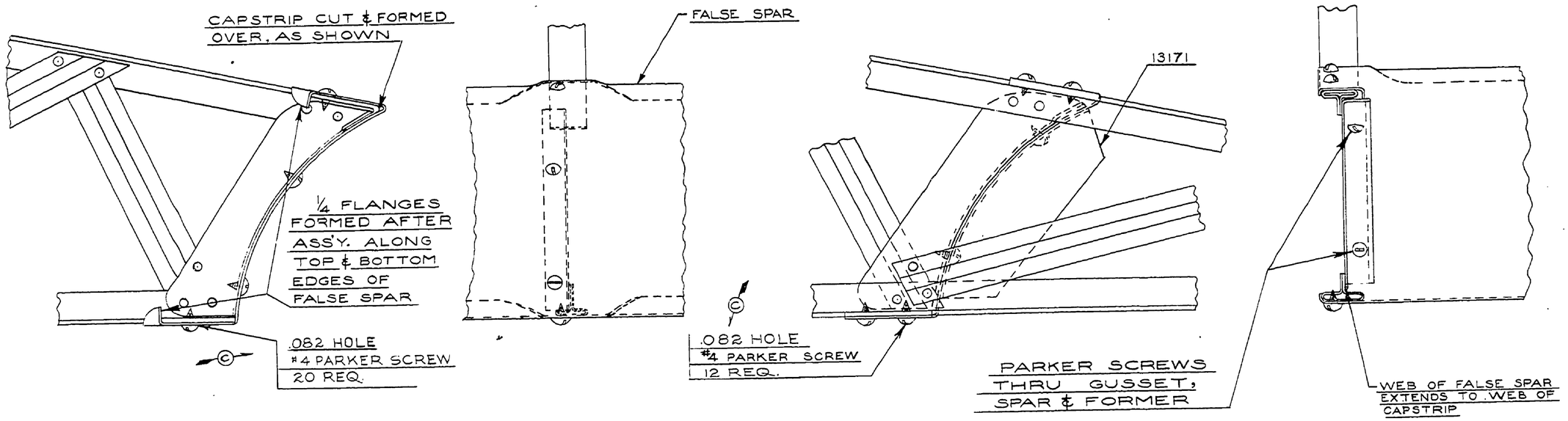

TYPICAL THREE-QUARTER RIB ATTACHMENT

TYPICAL INBOARD & OUTBOARD AILERON RIB ATTACHMENT

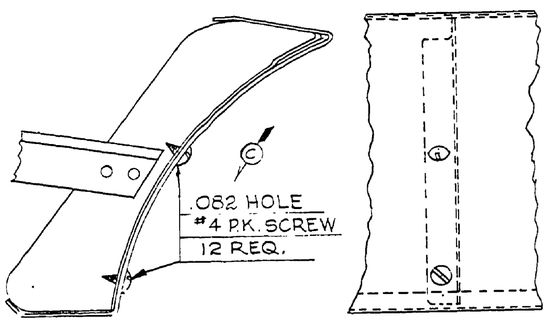

TYPICAL FALSE SPAR BRACE ATTACHMENT

PART No.	No. REQ.	SIZE	DESCRIPTION MATERIAL
#4	44	1/4 LONG	TYPE "A" PARKER SCREW
13171	2	GUSSET	

SCALE FULL SIZE

SPAR INSTALLATION — WING FALSE

MODEL	PER SHIP	NEXT ASSEMBLY	SUPERSEDES	SUPERSEDED BY
1-4A	2	15598		
1-3	2	15556		

REV.	REVISION	DATE	SR.	BY
C	.082 HOLE WAS .093	8-5-43		C.E.K.
B	1-4B T68 REF. REMOVED	6-28-43		C.K.
A	1-3 1-4A NEXT ASSY 15556 WAS 14445	6-28-43		C.K.

PIPER AIRCRAFT CORP.
LOCK HAVEN, PENNA.

DRAWN	CHECKED	APPROVED
J. CROWLEY 9-28-42	C.E.V. 10-22-42	

14393

FOR METAL SPAR WING 789

NO. 196-M ALBANENE A. & B. SMITH CO., PGH., PA.

A789

B8

B8

AN935-4	20	LOCKWASHER	
AN960-516	4	WASHER	
AN960-10	10		
AN380-2-2	3	COTTER PIN	
AN315-4	2	NUT	
AN315-6	1		
AN310-3	2		
AN3-6	1		
AN3-5	2		
AN3-4	4	BOLT	
AN3-10	1		
AN3-6	1		
AN3-5A	2		
AN3-4	06		
B11612-2	2	NOSE	
B11612-8	3	WASHER	
B11612-4	2	LINK	
504021	1	PULLEY	
502021	1	WASHER	
20102-7	2		
600103	1	SPACER	
13257	2	SEALING STRIP	
		"EAR-O-PRENE" PREF. ITM. CC.	
502033-3	1		
10701	4	FAIR LEAD BRACKET	
502402	1		
600079-3	1	BELLCRANK ASSY.	
4081	2	SNAP RING	
14693	1	RIB REPAIRS	
14192-1	1		
14192	1	TIP NOSE RIB	
15722	1	LEADING EDGE, REINF.	
12721-1	1	TIP LEADING EDGE COVER	
12723	1		
14093-1	1	W BRACE ASSY	
13403	1		
13728	1	NOSE RIB ASSY	
15572-1	1	FALSE SPAR	
15572	1		
13552-1	1	FALSE SPAR	
13552	1		
15482-1	1	LEADING EDGE COVER	
15482	1		
12472-1	1	TRAILING EDGE COVER	
14941-7	2	MAIN RIB	
14942	1	MAIN SPAR INST.	
14241	1	STRUT ASSY	
14439-1	1	REAR SPAR	
14432	1		
14435	1	LIFT STRUT FTG. INST.	
4393	1	FALSE SPAR INST.	
14383-5	1	FRONT SPAR	
14381	1		
14371-3	1	FILLER BLOCK	
14371-2	1		
14361-3	1	ANGLE	
14361-2	1		
14337	1	RIB NOSE TAPE INST.	
14332	1	TIP BOW INST.	
14302	16	BUTT FITTING INST.	
14291-1	1	ANGLE	
14291	1		
14283	1	LIFT STRUT FITTING INST.	
14282	2	DRAG STRUT INST.	
14232-1	1	DRAG STRUT	
14222-2	2	DRAG STRUT	
13052	1	AFT SPAR FITTING	
13052-1	1	LEADING EDGE COVER	
13022	2	NOSE RIB ASSY.	
13042-3	1		
13042-2	1	RIB ASSY	
13022-2	8		
12252-2	8		
12002	1	RIB ASSY	
12784	16	TRUSS SPAR	
12783	16	FALSE SPAR	
12781	1	FILL NO. SCR.	
12761	2	FITTING	
12751	1	RIB CENTER TAPE INST.	
12551	1	LEADING EDGE ATTACH.	
12542-6	1		
13506	10	LANDING LIGHT INST.	
12541-1	1	FAIRING	
12540	1	BRACE	
12847	10	BRACE ASSY.	
12431	10	CATCH	
12424	1	BUTT FITTING INST.	
12028	1	CHANNEL	
11692-2	1	CABLE ASSY	
11692-1	1	STOP	
11677	1	ROD	
11673-3	1	LEADING EDGE COVER	
11672-2	2	ANGLE	
11672	1	BRACKET	
11670-2	2	FALSE SPAR	
11668	1	PLATE	
11539-1	1	RIB ASSY.	
11539	16		
11941-6	4	DRAG WIRES	
	1	FUEL SEL. STOP NUT	
10652-7	1	BUTT FITTING INST.	
10703-4	2	WING BRACKET ASSY.	
10703	3	HINGE BRKT. ASSY.	
10702-3	1		
10702-2	1	TIP RIB	
10633-2	16	RIB ASSY.	
10633-1	2	FUEL TANK STRAP	
10632-1	2		
10631-3	1	DRAG STRUT INST.	
10631	1	DRAG BRACE TUBE	
10630-5	1	RIB ASSY.	
10630-2	1		
10629	1	FABRIC FORMER	
10291	3	ANGLE	
10289-28	15	RIB ASSY.	
10218-271	8	RIB ASSY.	

AN960-8	2	WASHER	
AN960-10	1		
AN960-10L	1		
AN960-516L	1		
AN3-5A	2	BOLT	
AN3-4	1		
AN3-3A	1		
AN3-3	1		
AN315-3	1	NUT	
AN315-4	1		
AN315-6	1		
AN320-2	1	COTTER PIN	
AN380-2-2	1		
AN960-10	1	WASHER	
AN960-10L	1		
AN960-516	1		
AN960-516L	1		
81362-14	1	BELLCRANK	
80622-7	1	FLAP CONTROL ROD	
80622-6	1		
80622-5	1		
80622-4	1		
80622-3	1		
80622-2	1		
80622-1	1		
80621-2	1		
80621-1	1		
80620-2	1		
80620-1	1		

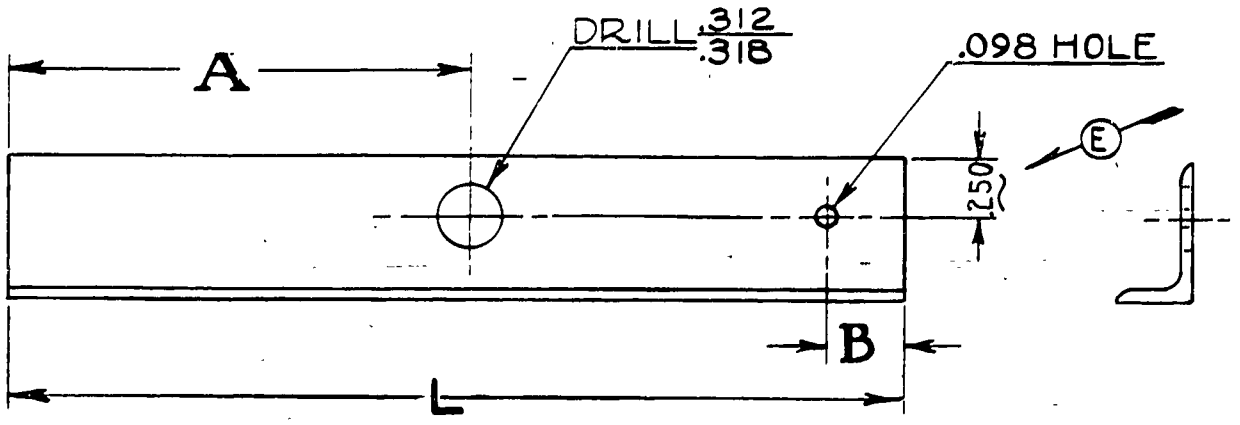

PART NO.	A	B	MODEL	PER SHIP	NEXT ASSEMBLY	L
14401-2	1.350	13/16	J3, L-4A	2	14312	4.528
14401-3	1.444	11/16	J3, L-4A	2	14252	4.528
14401-4	1.538	9/16	J3, L-4A	2	14252	4.528
14401-5	1.725	3/8	J3, L-4A	2	14242	4.528
14401-6	1.462	9/16				3.250
14401-7	3/8	3/8				1 7/8
14401-8	1.350	1/2				3 1/8

LIMITS, SHOP PRACTICES AND FINISH. UNLESS OTHERWISE NOTED, TO BE IN ACCORDANCE WITH PIPER SPECIFICATIONS #9 AND #10.

LET.	REVISION	DATE	BY
H	-8 ADDED	2-14-49	RM
G	-7 ADDED	7-2-48	RC
F	-6 & "L" ADDED	11-10-47	RC
E	.250 WAS .313	3-5-46	E.L.N.
D	REDRAWN & REVISED	10-12-43	R.F.

MODEL	PER SHIP	NEXT ASSEMBLY	SUPERSEDES	SUP. BY
NOTED	NOTED	NOTED		

PIPER AIRCRAFT CORP.
LOCK HAVEN, PENNA.

84921	DWG. REF. ONLY	ANGLE SECTION
		4 17/32 — PIPER SECTION 84921
PART No.	No. REQ.	SIZE — DESCRIPTION
		MATERIAL

SCALE FULL SIZE — TOTAL WT.-LBS.
FINISH

ANGLE - FRONT SPAR

R. FRANK	C.K.		14401
10-12-43	10-21-43		
DRAWN	CHECKED	APPROVED	

FOR METAL SPAR. WING.

A177

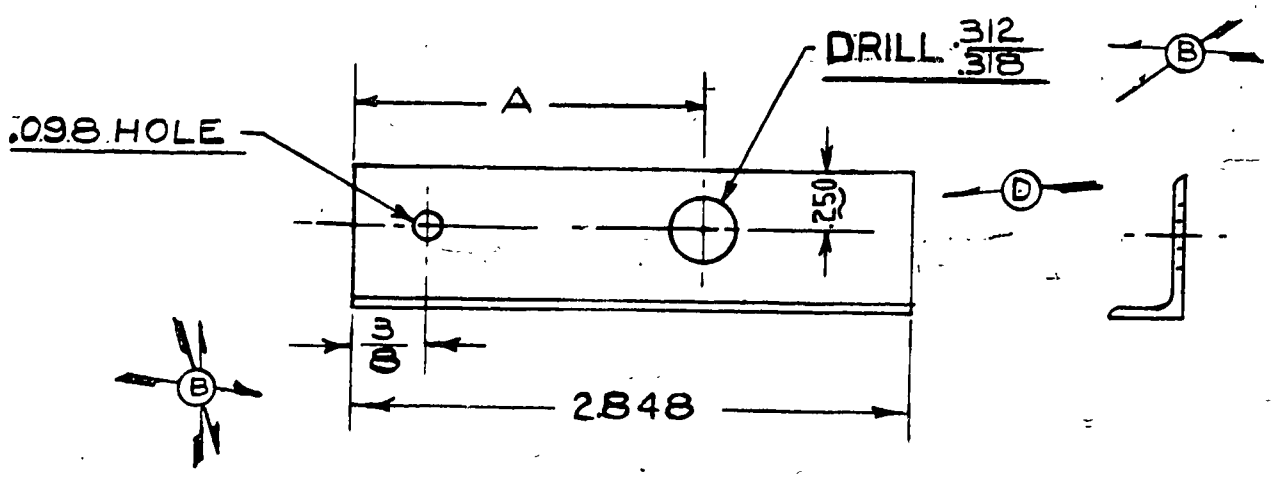

PART NO.	"A"	MODEL	PER SHIP	NEXT ASSEMBLY
14411 -2	1.897	J3,L4A	2	14252
14411 -3	1.850	J3,L4A	2	14253
14411 -4	1.725	J3,L4A	2	14242

LIMITS, SHOP PRACTICES AND FINISH, UNLESS OTHERWISE NOTED, TO BE IN ACCORDANCE WITH PIPER SPECIFICATIONS #9 AND #10.

LET.	REVISION	DATE	SR.	BY
D	.250 WAS .313	3-5-43		E.L.N.
C	SPEC. REVISED TO INCLUDE 84921	8-10-43		I.O.B.
B	.098 HOLE ADDED, DIMS. REVISED	8-10-43		I.O.B.
A	L-4B & TG-8 REF. REMOVED	6-25-43		R.R.F.

NO. 105-M ALBANENE A. & B. SMITH CO., PGH., PA.

NOTED MODEL	NOTED PER SHIP	NOTED NEXT ASSEMBLY	SUPERSEDES	SUPERSEDED BY

PIPER AIRCRAFT CORP.
LOCK HAVEN, PENNA.

84921	DWG. REF. ONLY	ANGLE SECTION
		2⅞ LONG — PIPER SECTION 84921
PART No.	No. REQ.	SIZE — DESCRIPTION
		MATERIAL

SCALE FULL SIZE

ANGLE — REAR SPAR

C.E.K.	McRAE	
9-28-42	10-23-42	
DRAWN	CHECKED	APPROVED

14411

FOR METAL SPAR WING

A

A178

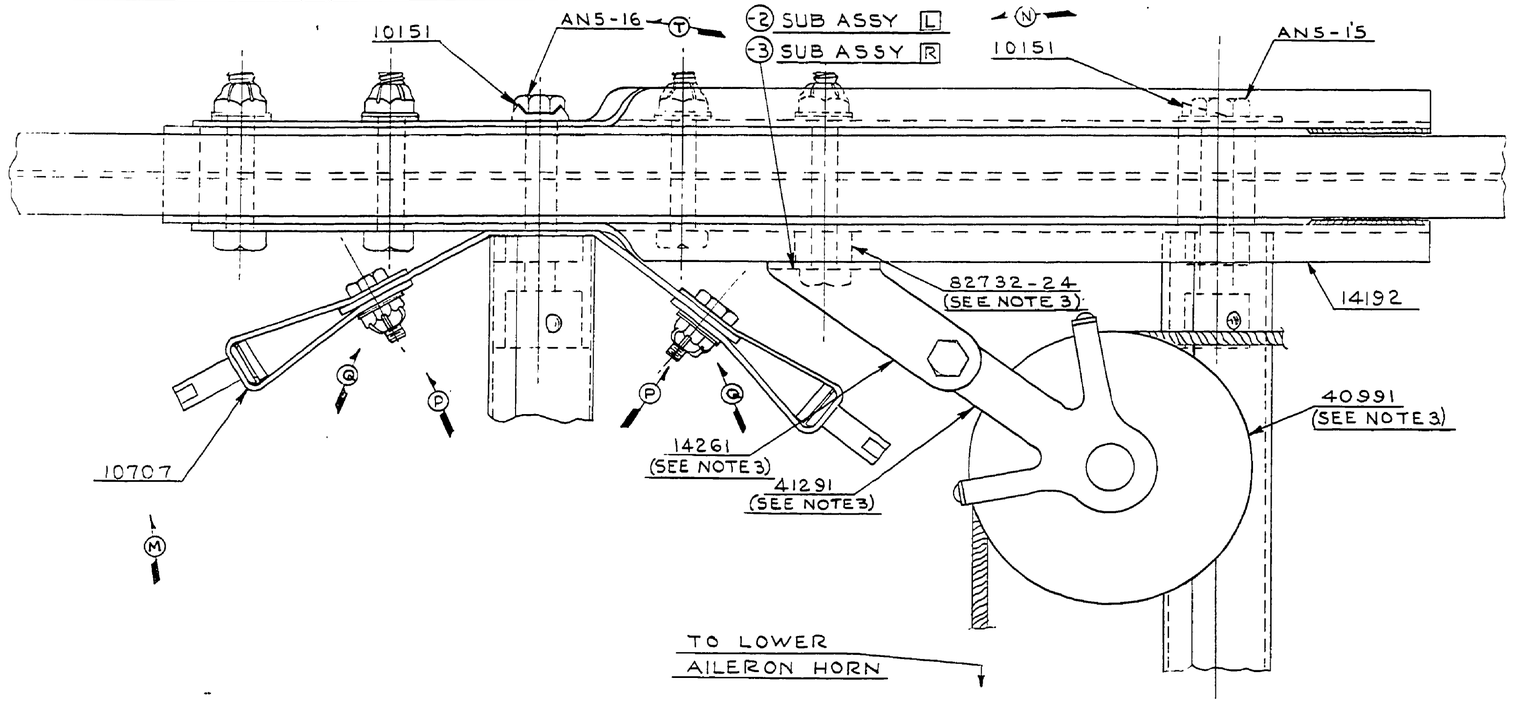

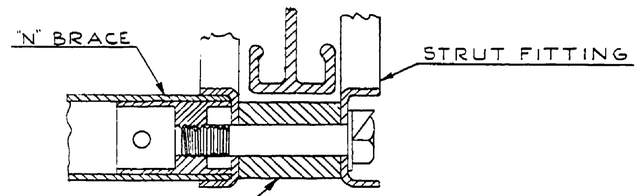

SECTION **A—A**

NOTE
LEFT INSTALLATION SHOWN

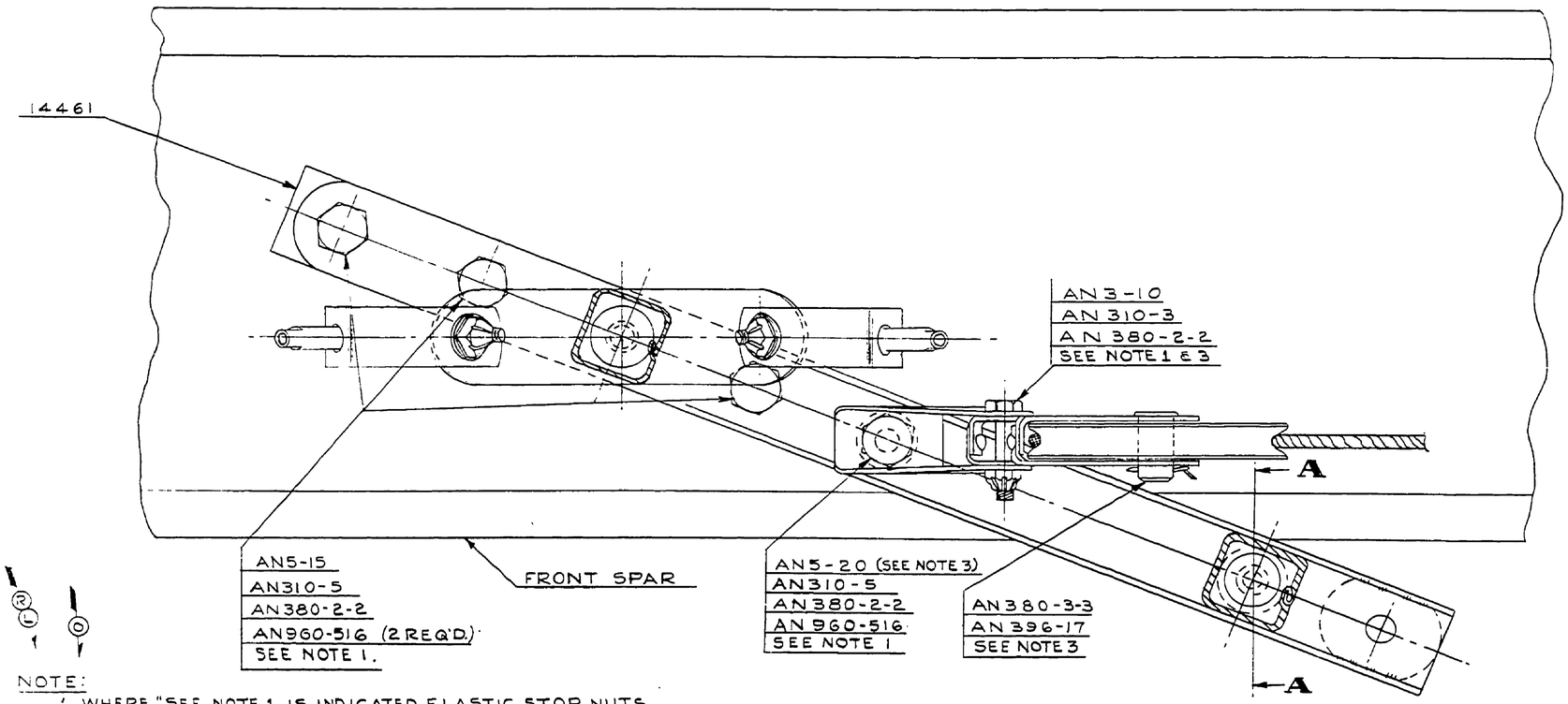

NOTE:

1. WHERE "SEE NOTE 1 IS INDICATED ELASTIC STOP NUTS (TYPE 22M OR 42E) AND UNDRILLED BOLTS MAY BE USED.
2. PART MARKED L USED ON LEFT INST. ONLY
   PART MARKED R USED ON RIGHT INST ONLY
3. PARTS 14261, 40991, 41291, 82732-24, AN380-3-3, AN396-17, AN3-10, AN310-3 & AN5-20 NOT USED ON MODEL PA-15.

LET.	REVISION	DATE	BY
U	REDRAWN WITHOUT CHANGE	6-18-51	I.M.M.
T	AN5-16 WAS AN5-17, 10T AND 63-516 ADD	6-29-48	R.M.
S	NOTE 3 ADDED	11-10-47	R.C.
R	NOTE 1 REVISED	1-2-47	I.M.
Q	10707 VIEW REVISED	11-1-46	I.D.B.
P	BOLTS REVERSED	9-13-46	I.D.B.
O	NOTE 2 ADDED	6-24-46	B.C.
N	-2 & -3 SUB ASS'Y. ADD	6-24-46	B.C.
M	10161-5 REM. & 10707 ADD	6-24-46	B.C.
L	NOTE 1 ADDED	6-18-46	C.E.K.
K	10161-5 WAS 11801-7	1-23-46	I.D.B.
J	REDRAWN & REVISED	8-23-43	J.C.

THIS DRAWING IS THE PROPERTY OF THE PIPER AIRCRAFT CORP. AND ITS POSSESSION BY UNAUTHORIZED PERSONS SHALL NOT BE CONSTRUED AS PERMISSION TO REPRODUCE FOR SALE, IN WHOLE OR IN PART, ANY DEVICES SHOWN THEREON

MODEL	PER PLANE	NEXT ASSEMBLY	SUPERSEDES	SUP. BY
J-4A	2	19996		
J-3	2	19996		

PIPER AIRCRAFT CORP.
LOCK HAVEN, PENNA.

PART NO.	No. REQ.	NAME / MATERIAL
-3	—	SUB ASSY. CONSISTS OF 41291
-2	—	14261, AN3-10, AN310-3 & AN380-2-2
AN960-516	7	WASHERS
AN396-17	1	FLAT HEAD PIN (SEE NOTE 3)
AN380-3-3	1	COTTER PIN (SEE NOTE 3)
AN380-2-2	5	COTTER PIN
AN310-5	4	NUT
AN310-3	1	NUT (SEE NOTE 3)
AN5-20	1	BOLT (SEE NOTE 3)
AN5-16	1	BOLTS
AN5-15	4	
AN3-10	1	BOLT (SEE NOTE 3)
82732-24	1	BUSHING (SEE NOTE 3)
41291	1	PULLEY HOUSING (SEE NOTE 3)
40991	1	PULLEY (SEE NOTE 3)
15631-2	1	SPACER
14461	2	FILLER BLOCKS
14261	1	PULLEY BRACKET (SEE NOTE 3)
14192	2	STRUT FITTING ASS'Y
10707	1	PULL ASS'Y
10151	2	LOCK PLATE

SCALE FULL SIZE | TOTAL WT.—LBS.
FINISH—PIPER SPECIFICATION #10
MANUFACTURING PRACTICES—PIPER SPECIFICATION #9

FITTINGS INST. — FRONT SPAR LIFT STRUT

DRAFTSMAN	CHECKER	STANDARDS
C. ROWLEY 8-23-43	C.K. 8-23-43	

14433

SRL O

A790

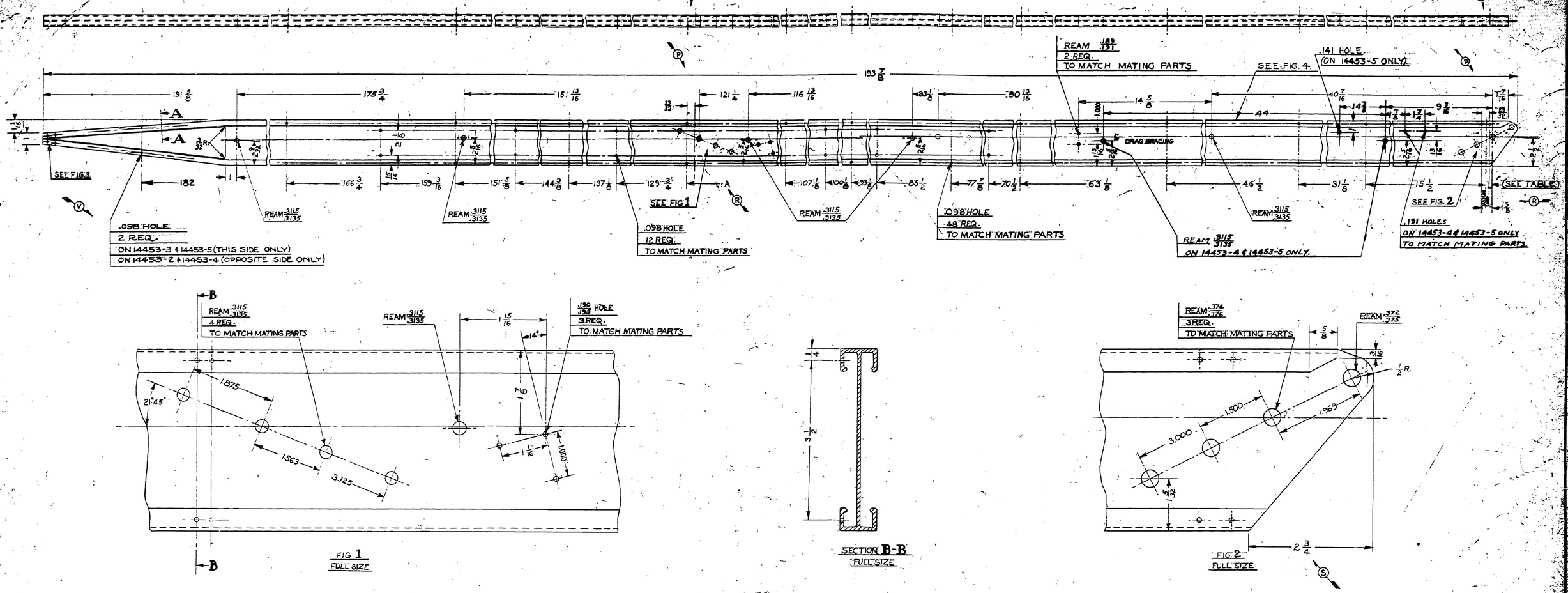

FIG 1
FULL SIZE

FIG. 2
FULL SIZE



SECTION A-A
FULL SIZE

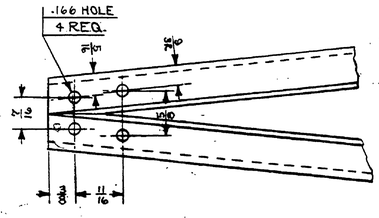

FIG. 3
DRILLING DETAIL
FULL SIZE

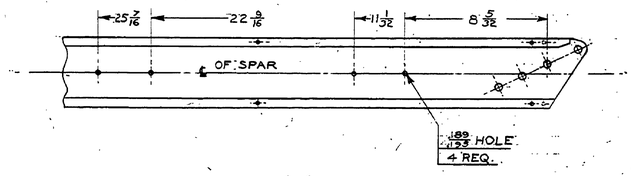

FIG. 4
FUEL TANK STRAP HOLE LOCATION DETAIL (-2,-3,-4 & -5 ONLY)

PART NO.	L	A	REMARKS.
14453-2	1 5/8	122 3/8	
14453-3	7/8	123 1/8	
14453-4	1 5/8	122 3/8	WITH ADDITIONAL HOLES AS NOTED
14453-5	7/8	123 1/8	

LTR.	REVISION	DATE	BY
V	2 OF .098 HOLES ADD.	12-26-50	F.C.S.
U	FUEL TANK STRAP HOLES ADDED FOR -3	5-2-50	C.K.
T	FUEL TANK STRAP HOLES ADD. FOR -5	2-21-50	C.K.
S	2 3/4 WAS 13/16	2-13-50	C.K.
R	8 OF .098 HOLES ADDED FOR -4 & -5 DIM. TAB. LOCATED, DATUM CHANGED	4-13-50	K.D.
Q	[illegible]	[illegible]	[illegible]
P	8 OF .098 HOLES ADDED	[illegible]	[illegible]
O	REDRAWN & REVISED	[illegible]	[illegible]

THIS DRAWING IS THE PROPERTY OF THE PIPER AIRCRAFT CORP. AND ITS POSSESSION BY UNAUTHORIZED PERSONS SHALL NOT BE CONSTRUED AS PERMISSION TO REPRODUCE FOR SALE, IN WHOLE OR IN PART, ANY DEVICES SHOWN THEREON.

MODEL	PER PLANE	NEXT ASSEMBLY	SUPERSEDES	SUP. BY

PIPER AIRCRAFT CORP.
LOCK HAVEN, PENNA.

PART NO.	NO. REQ.	SIZE	DESCRIPTION / MATERIAL
10743			SPAR SECTION
		194 LONG	PIPER SEC. 10743

SCALE 3 IN. = 1 FT. & NOTED — TOTAL WT.—LBS.
FINISH—PIPER SPECIFICATION #10
MANUFACTURING PRACTICES—PIPER SPECIFICATION #9

SPAR-REAR

DRAFTSMAN	CHECKER	STANDARDS
R.D.M. 6-26-46	R.E.T. 6-27-46	

14453

A879

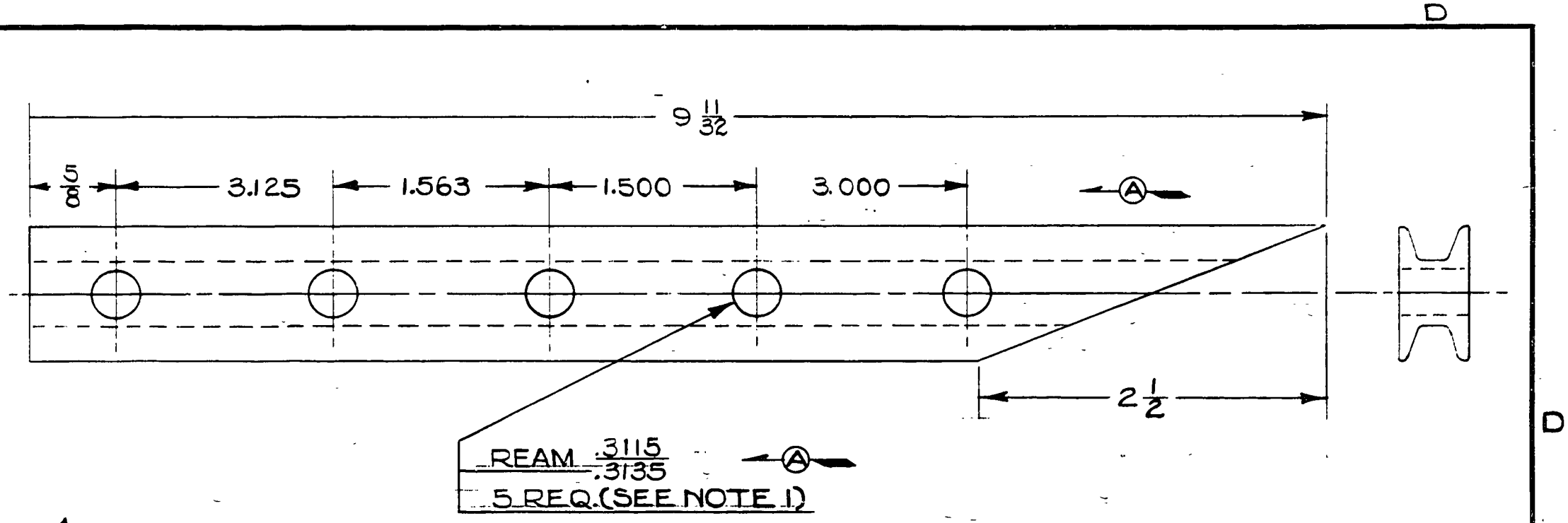

NOTE 1

HOLES SHALL COINCIDE WITH RELATED HOLES IN 14383 & 14172.

LET	REVISION	DATE	BY
E	REDRAWN WITHOUT CHANGE	6-12-51	LEM
D	.469 +.008 -.015 DIM. REMOVED	8-23-43	MGS
C	SPEC. REVISED TO INCLUDE 84931	8-5-43	CEK
B	L-4B & TG-8 REF. REMOVED	6-25-43	RRE
A	DIM'S. REVISED & NOTE ADDED	6-11-43	C.K.

MODEL	PER PLANE	NEXT ASSEMBLY	SUPERSEDES	SUP. BY
L-4A	1	14433		
J3	4	14438		

THIS DRAWING IS THE PROPERTY OF THE PIPER AIRCRAFT CORP. AND ITS POSSESSION BY UNAUTHORIZED PERSONS SHALL NOT BE CONSTRUED AS PERMISSION TO REPRODUCE FOR SALE IN WHOLE OR IN PART ANY DEVICES SHOWN THEREON.

PIPER AIRCRAFT CORP.
LOCK HAVEN, PENNA.

84931	DWG REF ONLY	FILLER BLOCK SECTION
		9 11/32 LONG — PIPER SECT. 84931
PART NO.	NO. REQ.	SIZE — DESCRIPTION / MATERIAL

SCALE FULL SIZE — TOTAL WT.—LBS.

FINISH—PIPER SPECIFICATION # 10

MANUFACTURING PRACTICES—PIPER SPECIFICATION # 9

BLOCK- FRONT SPAR LIFT STRUT FITTING FILLER

DRAFTSMAN	CHECKER	STANDARDS
C.E.K. 9-8-42	McRAE 10-22-42	

14461

179

A 179

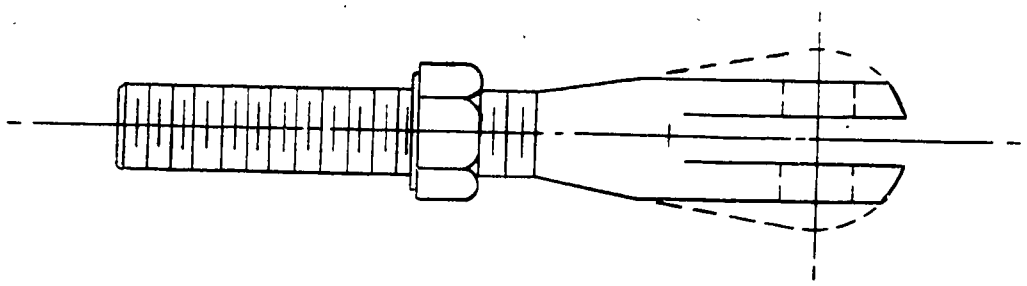

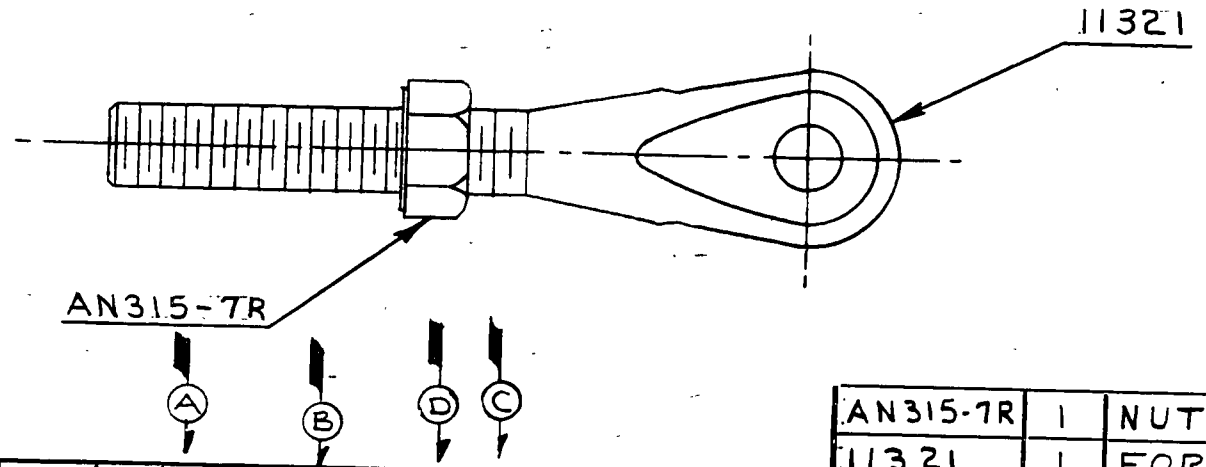

AN315-7R	1	NUT	
11321	1	FORK	
PART NO.	NO. REQ.	NAME / MATERIAL	

SCALE FULL SIZE | TOTAL WT.—LBS.

FINISH—PIPER SPECIFICATION # 10

MANUFACTURING PRACTICES—PIPER SPECIFICATION # 9

FORK ASSEMBLY— LIFT STRUT

MODEL	PER PLANE	NEXT ASSEMBLY	SUPERSEDES	SUP. BY
J5C	4	10098, 10096		
L-14	4	11341, 12542		
HE-1	4	12542, 11341		
J5B	4	12542, 11341		
J5	4	12542, 11341		

LET	REVISION	DATE	BY
E	REDRAWN WITHOUT CHANGE	6-12-51	I.M.M.
D	J5C N.A. 10098, 10096 WAS 12542, 11341	10-1-45	L.E.K
C	L-14 N.A. 11341 & 12542 WAS 90138	6-13-45	I.M.M
B	L-14 PER SHIP 4 WAS 2	6-13-45	I.M.M
A	L-14 MODEL REF. ADDED	3-17-45	E.L.N

THIS DRAWING IS THE PROPERTY OF THE PIPER AIRCRAFT CORP. AND ITS POSSESSION BY UNAUTHORIZED PERSONS SHALL NOT BE CONSTRUED AS PERMISSION TO REPRODUCE FOR SALE IN WHOLE OR IN PART ANY DEVICES SHOWN THEREON.

PIPER AIRCRAFT CORP.
LOCK HAVEN, PENNA.

DRAFTSMAN	CHECKER	STANDARDS	
J. CROWLEY 10-13-42	R.C.M. 10-13.42		**14481**

180

A180

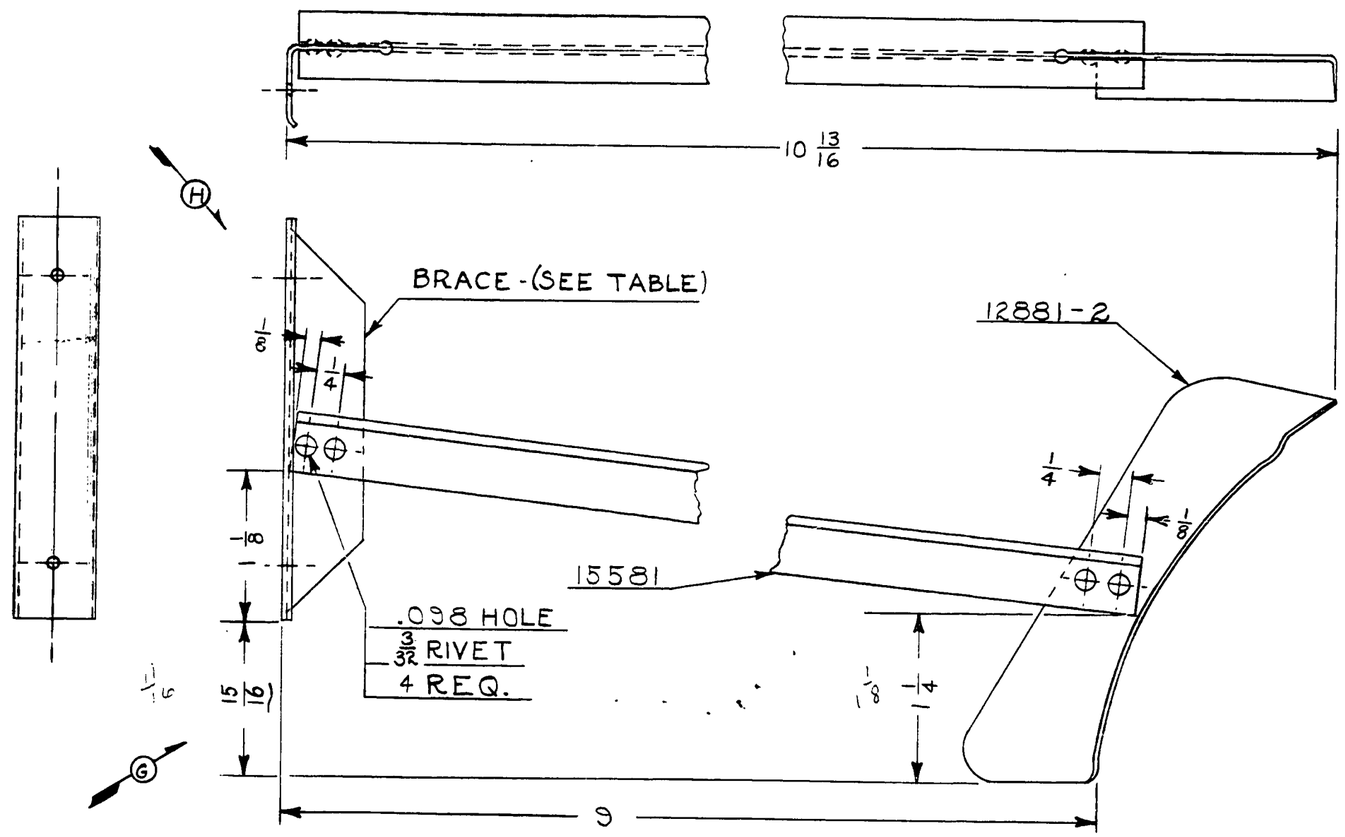

ASSEMBLY NO.	BRACE NO.
14541	13131-2
14541-2	12736

H

LET.	REVISION	DATE	BY
H	-2, 12736 & TABLE ADDED	11-21-46	K.D.
G	15/16 WAS 1 1/8	2-21-46	HMZ
F	REDRAWN & REVISED	1-31-46	HMZ

THIS DRAWING IS THE PROPERTY OF THE PIPER AIRCRAFT CORP. AND ITS POSSESSION BY UNAUTHORIZED PERSONS SHALL NOT BE CONSTRUED AS PERMISSION TO REPRODUCE FOR SALE, IN WHOLE OR IN PART. ANY DEVICES SHOWN THEREON

MODEL	PER PLANE	NEXT ASSEMBLY	SUPERSEDES	SUP. BY
J-3	1-2	15596		

PIPER AIRCRAFT CORP.
LOCK HAVEN, PENNA.

PART NO.	NO. REQ.	SIZE	DESCRIPTION
12736	1	BRACE	ON 14541-2 ONLY
15581	1	BRACE	
13131-2	1	BRACE	ON 14541 ONLY
12881-2	1	FORMER	
	4	3/32 X 9/64 L.	STEEL TUBULAR CADMIUM PLATED RIVETS

MATERIAL

SCALE FULL SIZE — TOTAL WT.—LBS.

FINISH—PIPER SPECIFICATION #10

MANUFACTURING PRACTICES—PIPER SPECIFICATION #9

BRACE ASS'Y.-AILERON FALSE SPAR

HMZ 1-31-46	C.E.T. 1-31-46	
DRAFTSMAN	CHECKER	STANDARDS

14541

591

A591

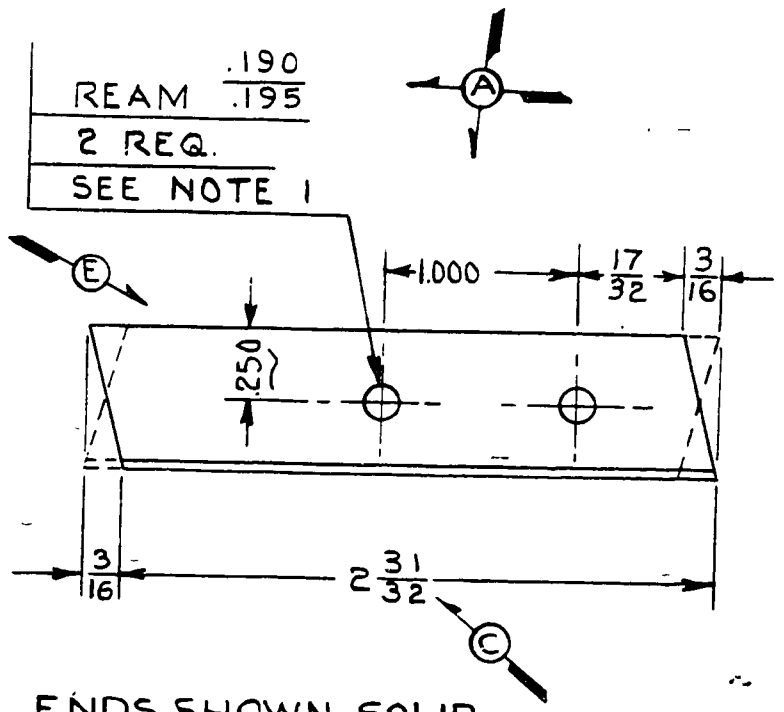

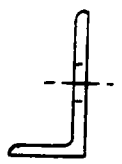

14571 L.H. ENDS SHOWN SOLID.
14571-1 R.H. ENDS SHOWN DOTTED.

NOTE 1:
HOLES MUST COINCIDE WITH RELATED HOLES IN 14611 & 14453.

LET	REVISION	DATE	BY
F	REDRAWN WITHOUT CHANGE	6-11-51	I.M.M.
E	.250 WAS 5/16	3-5-46	E.L.N.
D	SPEC. REVISED TO INCLUDE 84921	8-5-43	J.E.C.
C	2 31/32 WAS 3 7/32	8-5-43	J.E.C.
B	L-4B & TG-8 REF. REMOVED	6-26-43	R.R.F.
A	TOL'S. REVISED & NOTE ADDED	6-15-43	C.K.

MODEL	PER PLANE	NEXT ASSEMBLY	SUPERSEDES	SUP. BY
L-4A	1 L. 1 R.	14283		
J-3	1 L. 1 R.	14283		

THIS DRAWING IS THE PROPERTY OF THE PIPER AIRCRAFT CORP. AND ITS POSSESSION BY UNAUTHORIZED PERSONS SHALL NOT BE CONSTRUED AS PERMISSION TO REPRODUCE FOR SALE IN WHOLE OR IN PART ANY DEVICES SHOWN THEREON.

PIPER AIRCRAFT CORP.
LOCK HAVEN, PENNA.

PART NO.	NO. REQ.	SIZE	DESCRIPTION / MATERIAL
84921	DWG. REF. ONLY		ANGLE SECTION
		3 5/32 L.	PIPER SECT. 84921

SCALE FULL SIZE | TOTAL WT.—LBS.
FINISH—PIPER SPECIFICATION # 10
MANUFACTURING PRACTICES—PIPER SPECIFICATION # 9

ANGLE—AILERON PULLEY BRACKET ATTACH.

DRAFTSMAN	CHECKER	STANDARDS
R. FRANK 10-17-42	C.E.V. 10-22-42	

14571

181

A 181

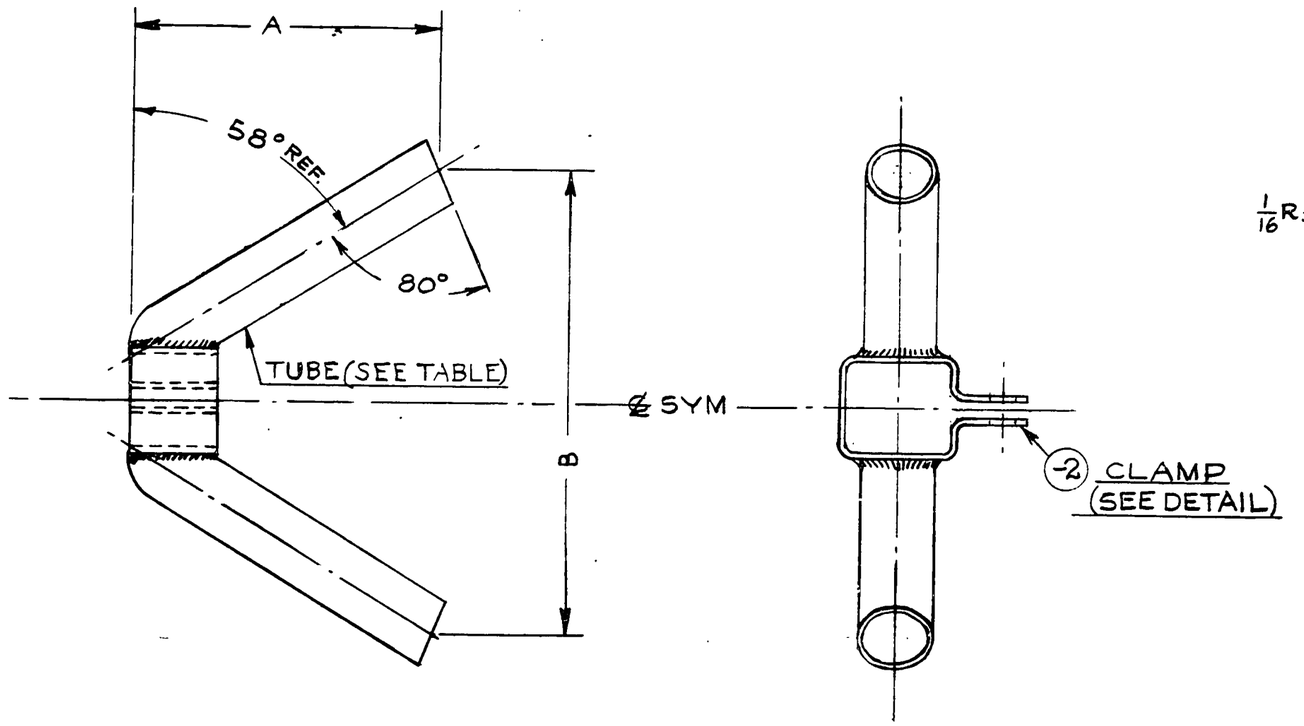

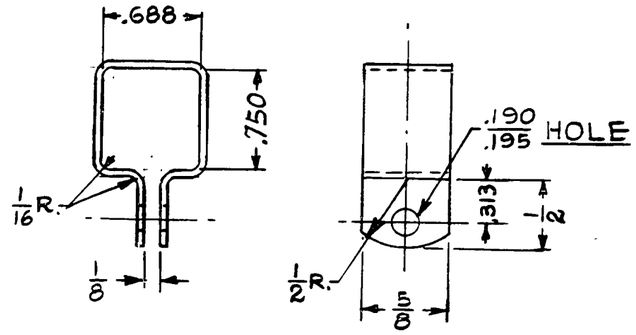

-2 DETAIL

ASSY. NO.	TUBE NO.	A	B
14581	14581-3	2 3/32	3 7/16
14581-5	14581-6	1 11/16	2 3/4

(F)

-6	2	½ × .028 × 2⅛	*1025 STEEL TUBE
-3		½ × .028 × 2⅝	
~~-4~~		~~½ × .028 × 3⅜~~	~~*1025 STEEL TUBE~~
-2	1	.045 × ⅝ × 3⅜	*1025 STEEL
PART NO.	NO. REQ.	SIZE	DESCRIPTION / MATERIAL

SCALE: FULL SIZE — TOTAL WT.—LBS.

FINISH—PIPER SPECIFICATION #10

MANUFACTURING PRACTICES—PIPER SPECIFICATION #9

STOP ASSEMBLY-AILERON HORN

THIS DRAWING IS THE PROPERTY OF THE PIPER AIRCRAFT CORP. AND ITS POSSESSION BY UNAUTHORIZED PERSONS SHALL NOT BE CONSTRUED AS PERMISSION TO REPRODUCE FOR SALE, IN WHOLE OR IN PART, ANY DEVICES SHOWN THEREON.

MODEL	PER PLANE	NEXT ASSEMBLY	SUPERSEDES	SUP. BY
~~J3~~	~~2~~	~~14582~~		

LET.	REVISION	DATE	BY
F	-5-6 & TABLE ADDED	9-13-49	C.K.
E	REDRAWN & REVISED	5-21-46	C.E.K.

PIPER AIRCRAFT CORP.
LOCK HAVEN, PENNA.

DRAFTSMAN	CHECKER	STANDARDS
C.E.K. 5-21-46	R.E.T. 5-22-46	

14581

592

A 592

NOTE. 1 STOP MOVED ALONG AILERON HINGE BRACKET UNTIL UPPER STOP TUBE JUST CLEARS AILERON SPAR WITH AILERON IN FULL UP POSITION.

2. FILE OFF FACE OF LOWER TUBE UNTIL 0 TO 1/8 CLEARANCE IS OBTAINED BETWEEN AILERON HORN AND LOWER STOP TUBE WITH AILERON IN FULL DOWN POSITION.

3 WHERE "SEE NOTE 3" IS INDICATED, ELASTIC STOP NUTS (TYPE 22M OR 42E) AND UNDRILLED BOLTS MAY BE USED.

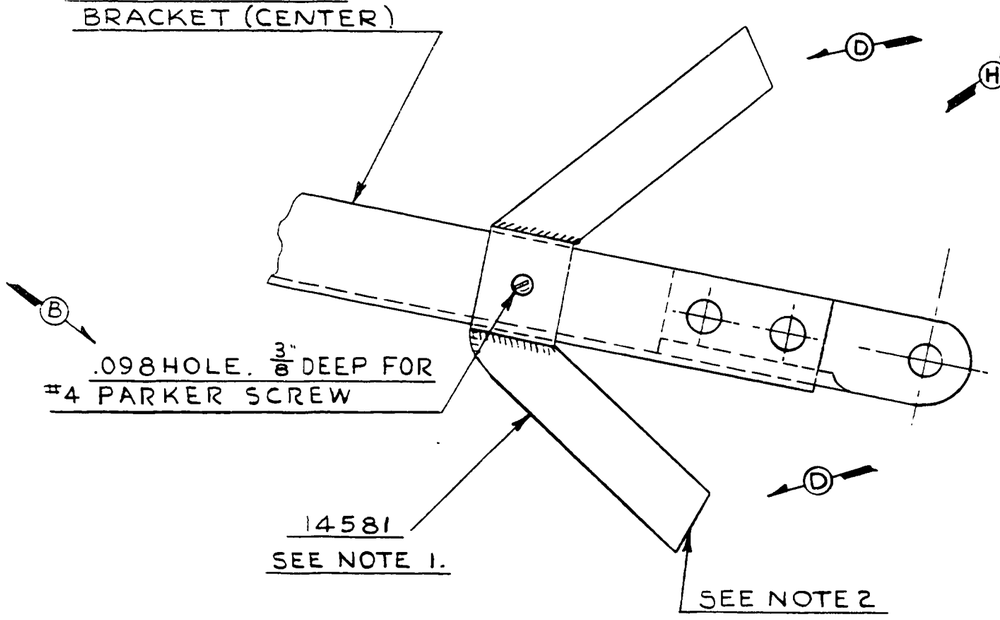

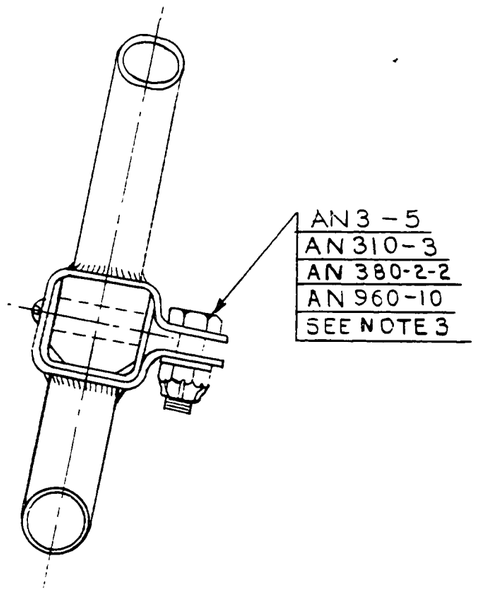

LET	REVISION	DATE	BY
J	REDRAWN WITHOUT CHANGE	6-15-51	I.M.M.
H	NOTE 3 REVISED	1-2-47	I.M.M.
G	REMOVED 14601	8-23-46	J.E.H.
F	NOTE 3 ADDED	6-18-46	C.E.K.
E	NOTE 2 REVISED	5-20-46	E.L.N.
D	VIEW REVISED	3-14-46	D.A.W.
C	1/8 WAS 1/16 IN NOTE 2	3-14-46	D.A.W.
B	.098 HOLE WAS .094. NOTE 2 REVISED	8-5-43	R.R.F.
A	L-4B, TG-8 REF. REMOVED	5-28-45	C.K.

MODEL	PER PLANE	NEXT ASSEMBLY	SUPERSEDES	SUP. BY
L-4A	2	6251		
J3	2	6259		

THIS DRAWING IS THE PROPERTY OF THE PIPER AIRCRAFT CORP. AND ITS POSSESSION BY UNAUTHORIZED PERSONS SHALL NOT BE CONSTRUED AS PERMISSION TO REPRODUCE FOR SALE IN WHOLE OR IN PART ANY DEVICES SHOWN THEREON.

PIPER AIRCRAFT CORP.
LOCK HAVEN, PENNA.

PART NO.	NO. REQ.	SIZE	DESCRIPTION / MATERIAL
AN960-10	1		WASHER
AN380-2-2	1		COTTER PIN
AN310-3	1		NUT
AN3-5	1		BOLT
14581	1		STOP ASS'Y.
#4	1	1/4 LONG	TYPE "Z" PARKER SCREW

SCALE FULL SIZE | TOTAL WT.—LBS.
FINISH—PIPER SPECIFICATION # 10
MANUFACTURING PRACTICES—PIPER SPECIFICATION # 9

STOP INSTALLATION — AILERON HORN

DRAFTSMAN	CHECKER	STANDARDS
C.E.K. 10-19-42	L.E.K 10-23-42	

14592

A 593

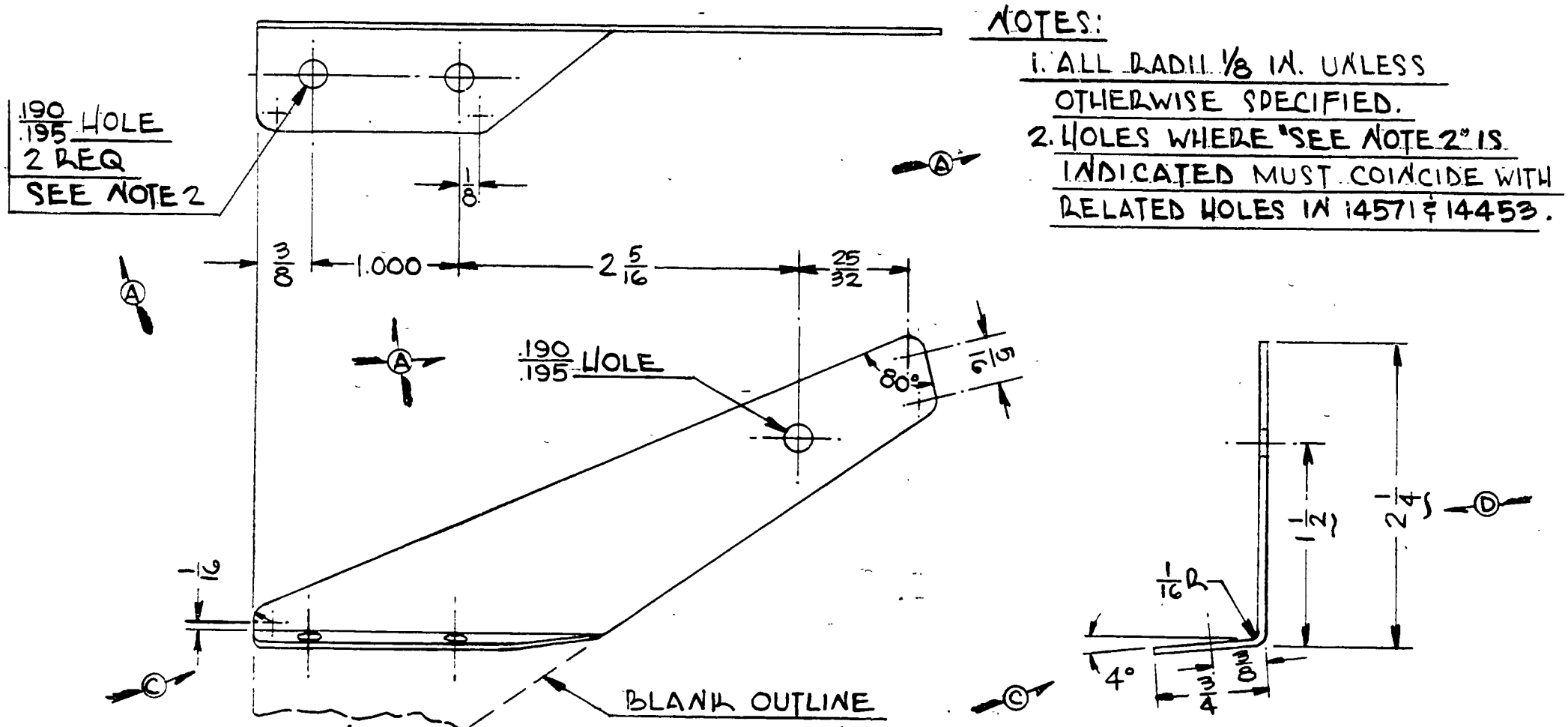

NOTES:

1. ALL RADII 1/8 IN. UNLESS OTHERWISE SPECIFIED.
2. HOLES WHERE "SEE NOTE 2" IS INDICATED MUST COINCIDE WITH RELATED HOLES IN 14571 & 14453.

14611 L.H. SHOWN
14611-1 R.H. OPPOSITE

LET	REVISION	DATE	BY
F	REDRAWN WITHOUT CHANGE	6-11-51	M.G.
E	23/32 WAS 23/32, 80° WAS 90°	11-2-43	R.E.S.
D	1½ WAS 1 7/16, 2¼ WAS 2 1/8	10-28-43	C.E.K.
C	VIEWS REV., 4° ADDED	10-28-43	C.E.K.
B	L-4B, TG-8 REF. REMOVED	6-15-43	C.K.
A	TOL'S. REV. & NOTE 2 ADDED	6-15-43	C.K.

MODEL	PER PLANE	NEXT ASSEMBLY	SUPERSEDES	SUP. BY
L-4A	1 & 1R	14283		
J3	1 & 1R	14283		

THIS DRAWING IS THE PROPERTY OF THE PIPER AIRCRAFT CORP. AND ITS POSSESSION BY UNAUTHORIZED PERSONS SHALL NOT BE CONSTRUED AS PERMISSION TO REPRODUCE FOR SALE IN WHOLE OR IN PART ANY DEVICES SHOWN THEREON.

PIPER AIRCRAFT CORP.
LOCK HAVEN, PENNA.

PART NO.	NO. REQ.	SIZE	DESCRIPTION / MATERIAL
		.045 x 1 3/8 x 5 3/16	#1025 STEEL

SCALE FULL SIZE | TOTAL WT.—LBS.

FINISH—PIPER SPECIFICATION # 10

MANUFACTURING PRACTICES—PIPER SPECIFICATION # 9

BRACKET - AILERON PULLEY (INBOARD HALF)

DRAFTSMAN	CHECKER	STANDARDS
C.L.W. 10-23-42	R.C.M. 10-23-42	

14611

182

A 182

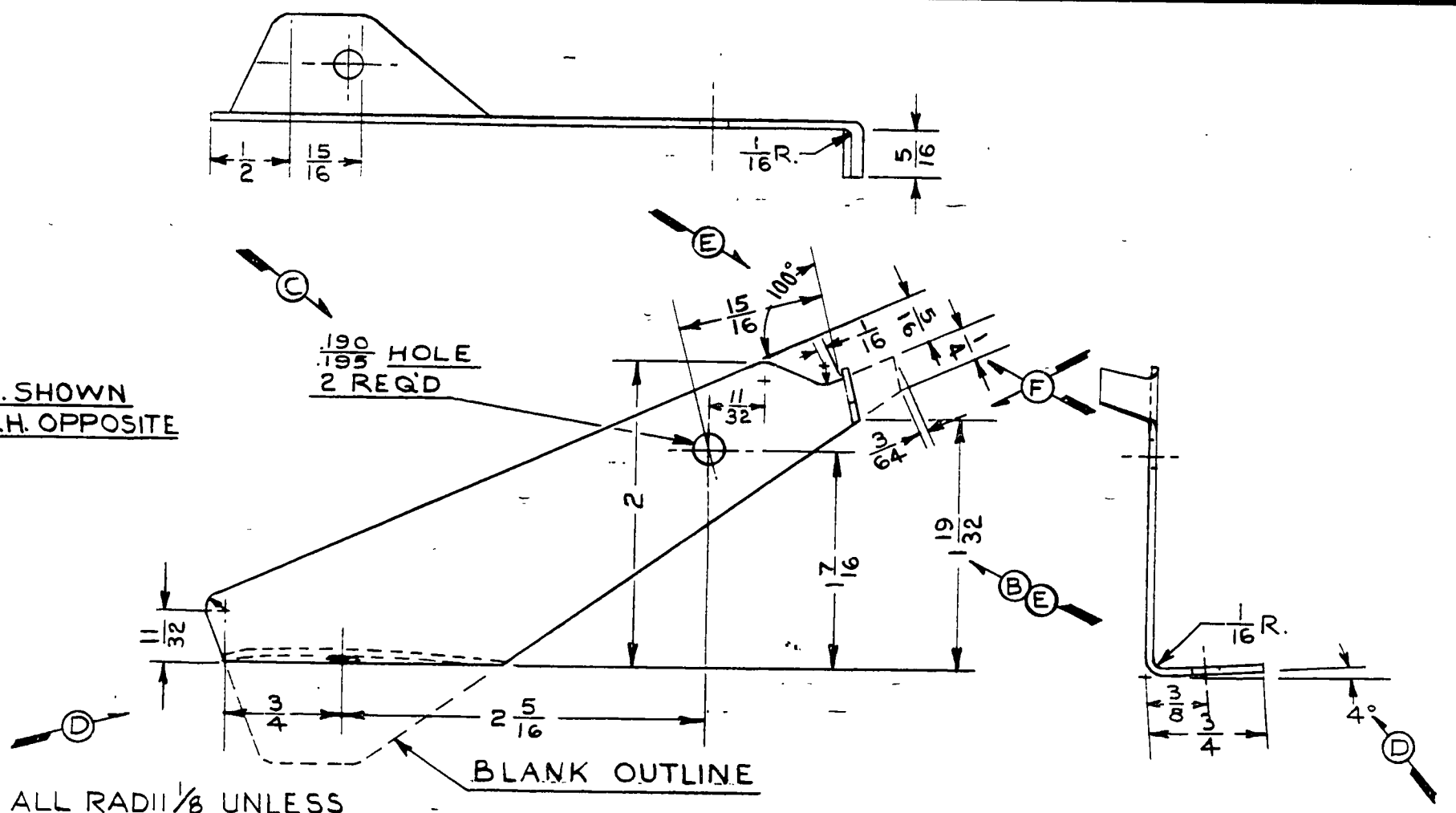

14621 L.H. SHOWN
14621-1 R.H. OPPOSITE

NOTE: ALL RADII 1/8 UNLESS OTHERWISE SPECIFIED.

LET	REVISION	DATE	BY
G	REDRAWN WITHOUT CHANGE	6-11-51	I.M.M.
F	1/4 WAS 7/32, 3/64 DIM. ADDED	10-28-43	R.E.S.
E	119/32 WAS 1 5/8, 100° WAS 90°	10-28-43	R.E.S.
D	VIEWS REVISED, 4° ADDED	10-28-43	C.E.K.
C	.190/.195 HOLE WAS .191 ±.002	8-5-43	R.E.S.
B	1 5/8 & 90° DIMS. ADDED	8-5-43	R.E.S.
A	L-4B, TG-8 REF. REMOVED	6-28-43	C.K.

MODEL	PER PLANE	NEXT ASSEMBLY	SUPERSEDES	SUP. BY
L-4A	1L.1R.	14283		
J3	1L.1R.	14283		

THIS DRAWING IS THE PROPERTY OF THE PIPER AIRCRAFT CORP. AND ITS POSSESSION BY UNAUTHORIZED PERSONS SHALL NOT BE CONSTRUED AS PERMISSION TO REPRODUCE FOR SALE IN WHOLE OR IN PART ANY DEVICES SHOWN THEREON.

PIPER AIRCRAFT CORP.
LOCK HAVEN, PENNA.

PART NO.	NO. REQ.	SIZE	DESCRIPTION
		.045 x 1 7/16 x 4 3/4	1025 STEEL
		MATERIAL	

SCALE FULL SIZE | TOTAL WT.—LBS.

FINISH—PIPER SPECIFICATION # 10

MANUFACTURING PRACTICES—PIPER SPECIFICATION # 9

BRACKET—AILERON PULLEY (OUTBOARD HALF)

DRAFTSMAN	CHECKER	STANDARDS
R. FRANK 10-23-42	R.C.M. 10-23-42	

14621

A

183

A 183

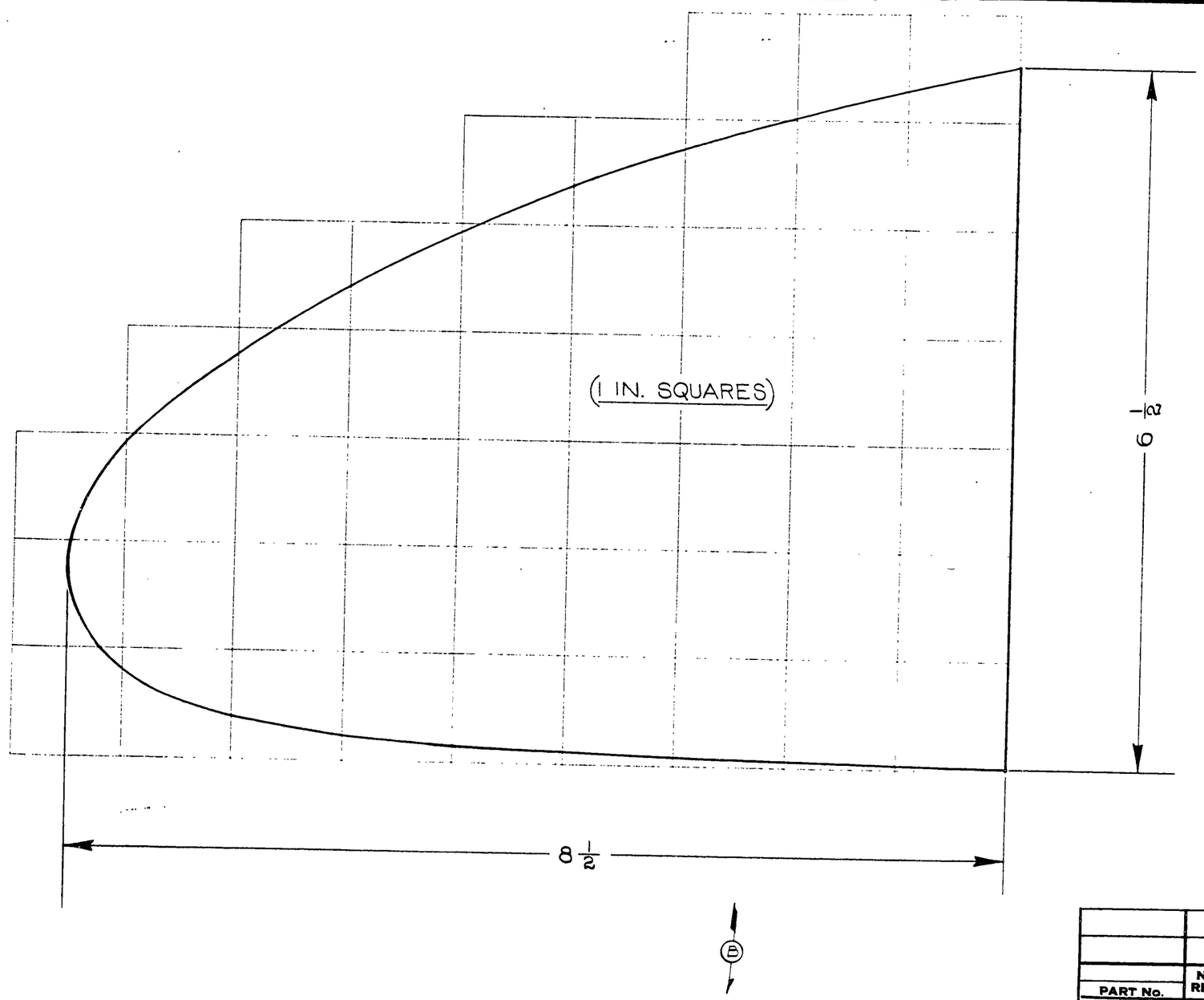

PART No.	No. REQ.	MATERIAL
SCALE FULL SIZE		TOTAL WT.—LBS.

FINISH—PIPER SPEC. #10

MANUFACTURING PRACTICES—PIPER SPEC. #9

OUTLINE – NOSE PLATE

LET.	REVISION	DATE	BY
B	L-14 MODEL REF. ADDED	7-3-45	H.R.K
A.	REDRAWN & REVISED	5-23-44	A.I.N.

MODEL	PER PLANE	NEXT ASSEMBLY	SUPERSEDES	SUP. BY
L-14		10632		
J5C		10632 10133		

PIPER AIRCRAFT CORP.
LOCK HAVEN, PENNA.

DRAFTSMAN	CHECKER	STANDARDS
A.I. NOVOSEL 5-23-44	R.E.T. 5-24-44	

14642

NO. 190-L ALBANENE A. & B. SMITH CO., PGH., PA.

594

A 594

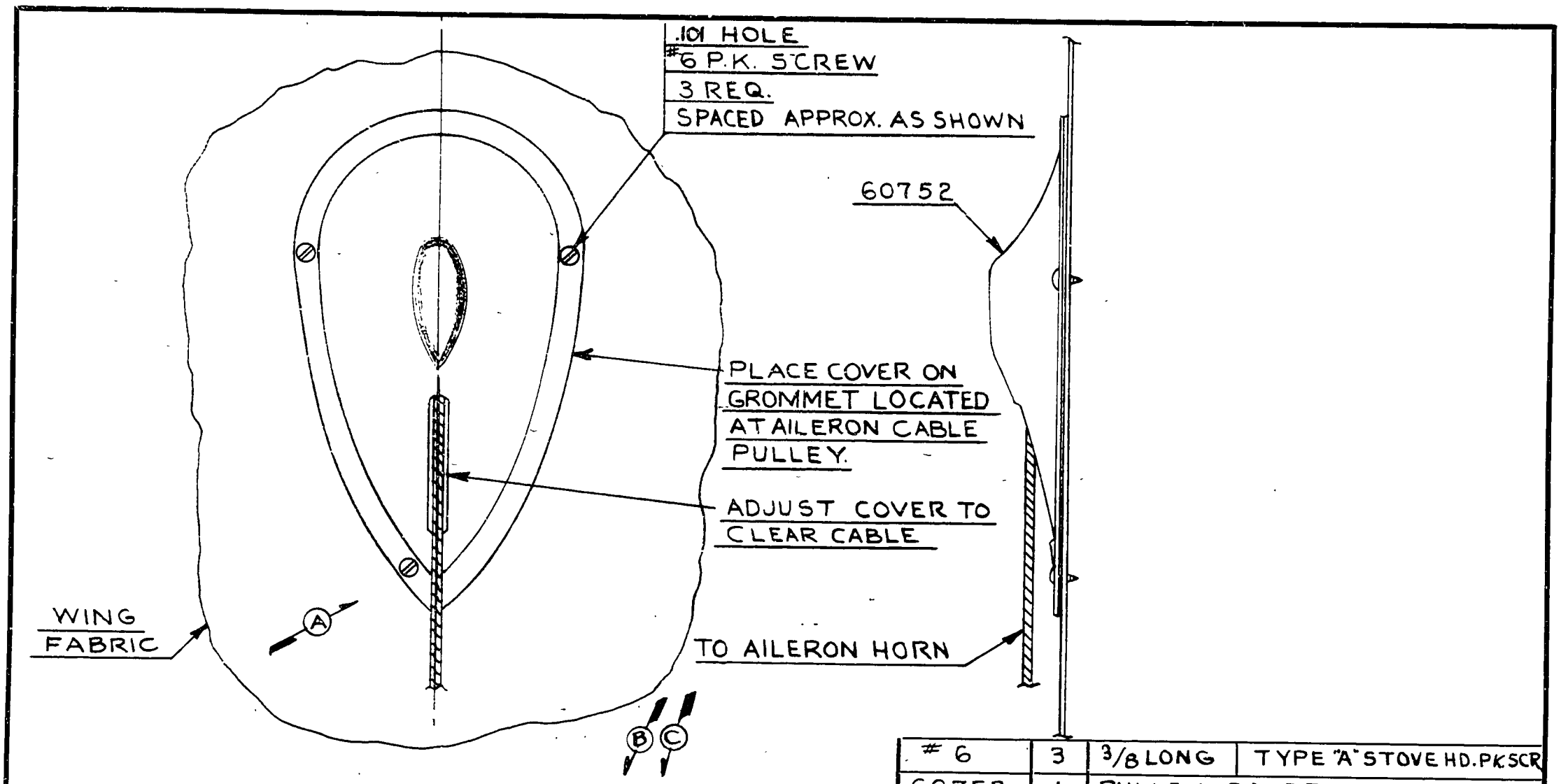

#6	3	3/8 LONG	TYPE "A" STOVE HD. PK SCR
60752	1	PULLEY COVER	
PART NO.	NO. REQ.	SIZE	DESCRIPTION
		MATERIAL	
SCALE 6 IN. = 1 FT.		TOTAL WT.—LBS.	

FINISH—PIPER SPECIFICATION # 10

MANUFACTURING PRACTICES—PIPER SPECIFICATION # 9

COVER INST. — WING PULLEY

MODEL	PER PLANE	NEXT ASSEMBLY	SUPERSEDES	SUP. BY
J3	2	16375		
L-4A	2	14936		
L-4B	2	13411		
TG8	2	14151		

LET	REVISION	DATE	BY
D	REDRAWN WITHOUT CHANGE	6-13-51	I.M.M
C	J3 NEXT ASSY. 16375 WAS 13411	12-10-43	R.E.T.
B	L-4A NEXT ASSY 14935 WAS 13411	7-20-43	R.E.S
A	SCREW RELOCATED	4-1443	J.E.C

THIS DRAWING IS THE PROPERTY OF THE PIPER AIRCRAFT CORP. AND ITS POSSESSION BY UNAUTHORIZED PERSONS SHALL NOT BE CONSTRUED AS PERMISSION TO REPRODUCE FOR SALE IN WHOLE OR IN PART ANY DEVICES SHOWN THEREON.

PIPER AIRCRAFT CORP.
LOCK HAVEN, PENNA.

DRAFTSMAN	CHECKER	STANDARDS
McRAE 2-9-43	C.E.V. 2-11-43	

14881

A 184

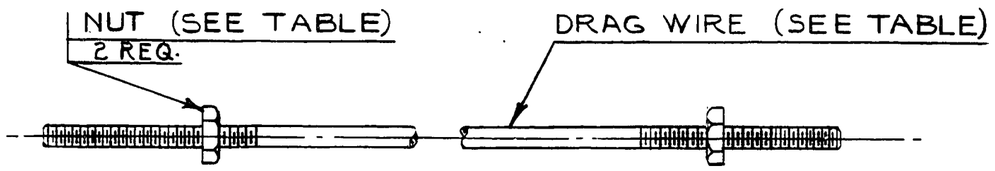

ASSY NO.	DRAG WIRE NO.	NUT	MODEL	PER SHIP	NEXT ASSEMBLY
14941-2	12861-2	#6-40-*1010 STL. CAD. PLATED HEX NUT			
14941-3	12861-3		J3	4	13004
14941-4	12861-4		J3	10	13004
14941-5	12861-5		J3	6	13004
14941-6	12861-6		J3	16	15556
14941-7	12861-7		J3	4	15556
14941-8	10191-3		J5C	4	14766
14941-9	10181-2	#10-32-*1010 STL. CAD. PLATED HEX NUT	J5C	8	14766
14941-10	10181-3		J5C	8	14766
14941-11	10181-6				

THIS DRAWING IS THE PROPERTY OF THE PIPER AIRCRAFT CORP. AND ITS POSSESSION BY UNAUTHORIZED PERSONS SHALL NOT BE CONSTRUED AS PERMISSION TO REPRODUCE FOR SALE, IN WHOLE OR IN PART, ANY DEVICES SHOWN THEREON

LET	REVISION	DATE	BY
H	-11 ADDED	6-30-48	RC
G	REDRAWN & REVISED	3-15-46	I.D.B.

MODEL	PER PLANE	NEXT ASSEMBLY	SUPERSEDES	SUP. BY
NOTED	NOTED	NOTED		

PIPER AIRCRAFT CORP.
LOCK HAVEN, PENNA.

SEE TABLE	2	NUT
SEE TABLE	1	DRAG WIRE
PART No.	No. REQ.	NAME / MATERIAL
SCALE		TOTAL WT.—LBS.

FINISH—PIPER SPECIFICATION #10
MANUFACTURING PRACTICES—PIPER SPECIFICATION #9

WIRE ASSEMBLIES WING DRAG

DRAFTSMAN	CHECKER	STANDARDS
I.D.B. 3-15-46	E.E.T. 3-20-46	

14941

595

A 595

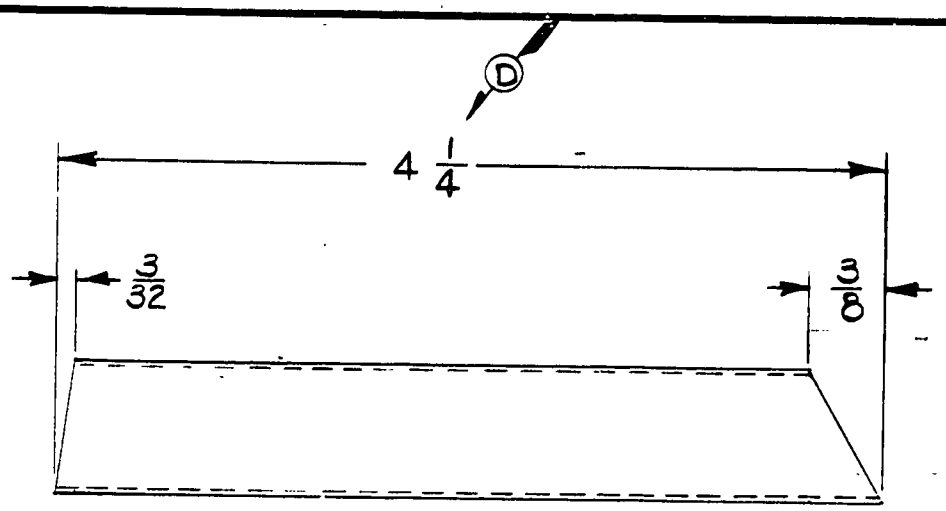

PART NO.	MATERIAL	MODEL	WING ASS'Y.	PERSHIP	NEXT ASSEMBLY	SUPERSEDES
15041	PIPER SECTION 84761	L-4A		22	13042, 13028, 13052, 12902, 16621	11982-20
		J3	WOOD SPAR WING	22		
			METAL SPAR WING	24		
15041-2	PIPER SECTION 84761-2	L-4A		20	12662	11982-26
		J3	WOOD SPAR WING	20	12662	
			METAL SPAR WING	22	12662, 15712	

LET	REVISION	DATE	BY
E	REDRAWN WITHOUT CHANGE	6-13-51	I.E.M.
D	4 1/4 WAS 4 3/16	5-21-46	C.E.W.
C	METAL SPAR REF. ADDED FOR J3	11-3-43	R.E.T.
B	J3 MODEL REF. ADDED	8-18-43	I.D.B.
A	15041-2 ADDED	6-4-43	R.R.F.

NOTED MODEL	NOTED PER PLANE	NOTED NEXT ASSEMBLY	NOTED SUPERSEDES	SUP. BY

THIS DRAWING IS THE PROPERTY OF THE PIPER AIRCRAFT CORP. AND ITS POSSESSION BY UNAUTHORIZED PERSONS SHALL NOT BE CONSTRUED AS PERMISSION TO REPRODUCE FOR SALE IN WHOLE OR IN PART ANY DEVICES SHOWN THEREON.

PIPER AIRCRAFT CORP.
LOCK HAVEN, PENNA.

84761	DWG REF ONLY	RIB BRACE SECTION	
		4 1/4 LONG	NOTED
PART NO.	NO. REQ.	SIZE	DESCRIPTION
		MATERIAL	

SCALE FULL SIZE — TOTAL WT.—LBS.

FINISH—PIPER SPECIFICATION # 10

MANUFACTURING PRACTICES—PIPER SPECIFICATION # 9

BRACE—WING RIB #1 VERTICAL

I.D.B.	L.E.K.		15041
5-3-43	5-13-43		
DRAFTSMAN	CHECKER	STANDARDS	

185

A 185

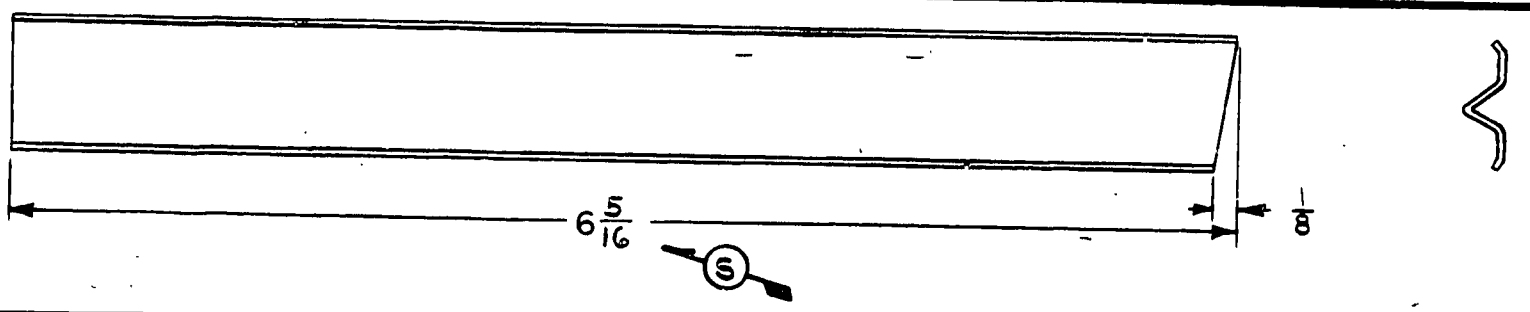

PART NO.	MODEL	PER PLANE	NEXT ASSEMBLY	WING ASSEMBLY
15051	J5C	~~24~~	10702, 10642, 10692	~~WOOD SPAR WING~~
		24	10732, 10227, 10722, 10108, 10109	METAL SPAR WING
	J3	22	12902, 13042	WOOD SPAR WING
		24	13052, 13022	METAL SPAR WING
	L-4A	22	12902, 13042, 13052, 13022	WOOD SPAR WING
	L-14	24	90450, 90451, 90453, 90452	
			90462, 90463, 90465, 90478	
			90466, 90520, 90519, 90467	
			90522, 90521, 90524, 90523	
15051-1	J5C	~~24~~	10708, 10648, 10692	~~WOOD SPAR WING~~
		24	10732, 10227, 10722, 10108, 10109	METAL SPAR WING
	J3	22	12902, 13042	WOOD SPAR WING
		24	13052, 13022	METAL SPAR WING
	L-4A	22	12902, 13042, 13052, 13022	WOOD SPAR WING
	L-14	24	90450, 90451, 90453, 90452,	
			90462, 90463, 90465, 90478	
			90466, 90520, 90519, 90467	
			90522, 90521, 90524, 90523	

(P) ~~WOOD SPAR WING~~

(K)(L)(M)(N)(Q)(R) METAL SPAR WING

15051 SHOWN

15051-1 OPPOSITE

LET.	REVISION	DATE	BY	NOTES	MODEL	PER PLANE	NEXT ASSEMBLY	SUPERSEDES	SUP. BY
S	6 5/16 WAS 6 1/4	5-21-46	CEV.						
R	J5C N.A. 10227 WAS 10672	12-4-45	LEK						
Q	J5C N.A. 10108 WAS 10652	12-4-45	LEK						
P	J5C WOOD SPAR REF. CANCELED	11-30-45	J.D.B.						
O	J5C N.A. 10109 REMOVED	10-31-45	LEK						
N	J5C N.A. 10672 WAS 10227	10-31-45	LEK						
M	J5C N.A. 10652 WAS 10108	10-31-45	LEK	NOTED	NOTED	NOTED	NOTED	1982-5	
L	J5C N.A. 10227 WAS 10672	10-19-45	R.E.S.						
K	J5C N.A. 10108 WAS 10652	10-5-45	H.R.K.						
J	REDRAWN & REVISED	3-20-45	HMZ.						

PENCILTEX - A. B. SMITH CO., PGH., PA.

PIPER AIRCRAFT CORP.
LOCK HAVEN, PENNA.

84761	DWG. REF. ONLY	RIB BRACE SECTION
		6 5/16 L. PIPER SECTION 84761-2
PART No.	No. REQ.	SIZE / DESCRIPTION / MATERIAL
SCALE FULL SIZE		TOTAL WT.—LBS.

FINISH—PIPER SPECIFICATION #10

MANUFACTURING PRACTICES—PIPER SPECIFICATION #9

BRACE- WING RIB
#4 VERTICAL

DRAFTSMAN	CHECKER	STANDARDS
H.M.Z. 3-20-45	R.E. TITUS 3-21-45	

15051

186

A 186

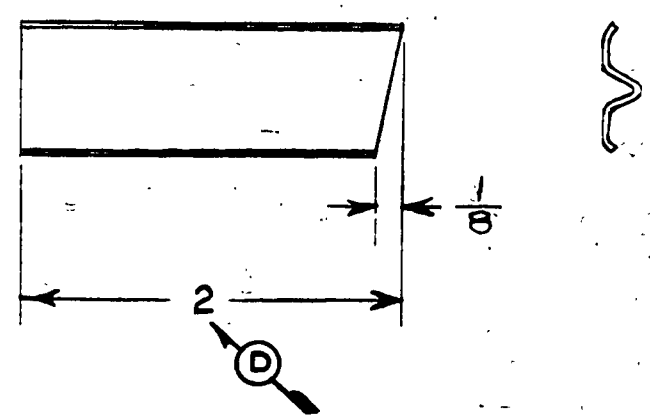

15061 L.H. SHOWN
15061-1 R.H. OPPOSITE

LIMITS, SHOP PRACTICES AND FINISH, UNLESS OTHERWISE NOTED, TO BE IN ACCORDANCE WITH PIPER SPECIFICATIONS #9 AND #10.

PART No.	No. REQ.	SIZE	DESCRIPTION / MATERIAL
84761	DWG. REF. ONLY		RIB BRACE SECTION
		2 LONG	PIPER SECTION 84761-2

SCALE FULL SIZE

BRACE- WING RIB
#5 VERTICAL

LET.	REVISION	DATE	SR.	BY
D	2 WAS 1 15/16	5-21-46		C.E.V.
C	J3 MODEL REF. ADDED	8-18-43		I.D.B.
B	1L,1R & 12902 NEXT ASSY. ADDED	7-29-43		M.G.S.
A	84761-2 WAS 84761	6-3-43		R.R.F.

MODEL	PER SHIP	NEXT ASSEMBLY	SUPERSEDES	SUPERSEDED BY
L4A, J3	8L	13052		
	2L, 2R	13042, 12902	11982-9	

PIPER AIRCRAFT CORP.
LOCK HAVEN, PENNA.

DRAWN	CHECKED	APPROVED
I.D.B. 5-3-43	L.E.K. 5-13-43	

15061

NO. 186-M ALBANENE A. & B. SMITH CO., PGH., PA.

187

A 187

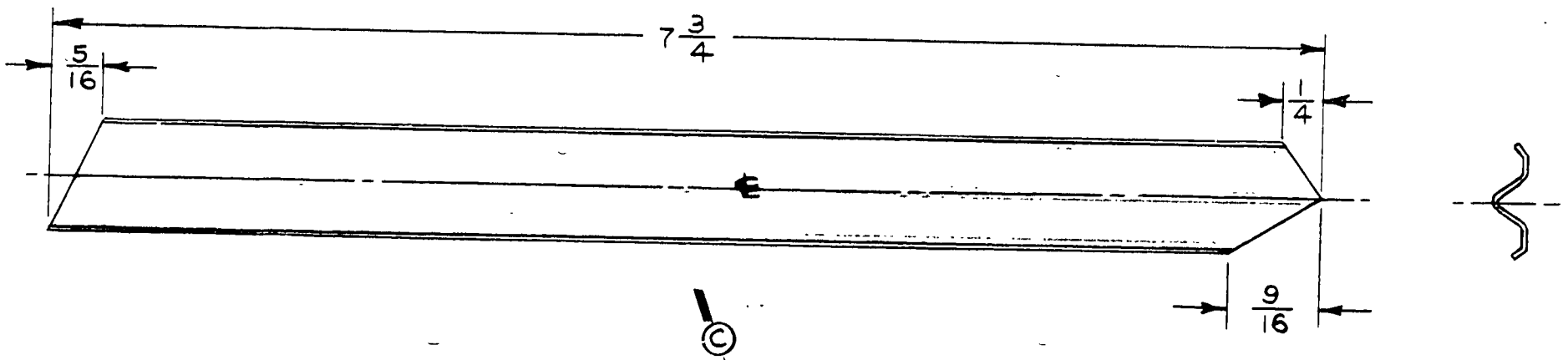

PART NO.	MATERIAL	MODEL	WING ASS'Y.	PER SHIP	NEXT ASSEMBLY	SUPERSEDES
15101	PIPER SECTION 84761	J-4A		22	13042, 13022, 13052, 12902, 16621	1982-34
		J3	WOOD SPAR WING	22		
			METAL SPAR WING	24		
15101-2	PIPER SECTION 84761-2	J4A; J3		20	12662	1982-25

LET	REVISION	DATE	BY
D	REDRAWN WITHOUT CHANGE	6-14-51	I.M.M.
C	METAL SPAR REF. ADDED FOR J3	11-4-43	R.E.T.
B	J3 MODEL REF. ADDED	8-18-43	I.D.B.
A	15101-2 ADDED	6-4-43	R.R.F.

NOTED MODEL	NOTED PER PLANE	NOTED NEXT ASSEMBLY	NOTED SUPERSEDES	SUP. BY

THIS DRAWING IS THE PROPERTY OF THE PIPER AIRCRAFT CORP. AND ITS POSSESSION BY UNAUTHORIZED PERSONS SHALL NOT BE CONSTRUED AS PERMISSION TO REPRODUCE FOR SALE IN WHOLE OR IN PART ANY DEVICES SHOWN THEREON.

PIPER AIRCRAFT CORP.
LOCK HAVEN, PENNA.

84761	DWG. REF. ONLY	RIB BRACE SECTION
		7 3/4 LONG — NOTED
PART NO.	NO. REQ.	SIZE — DESCRIPTION
		MATERIAL

SCALE FULL SIZE | TOTAL WT.—LBS.

FINISH—PIPER SPECIFICATION # 10

MANUFACTURING PRACTICES—PIPER SPECIFICATION # 9

BRACE—WING RIB #1 DIAGONAL

R. FRANK	L.E.K.	
5-1-43	5-13-43	
DRAFTSMAN	CHECKER	STANDARDS

15101

188

A 188

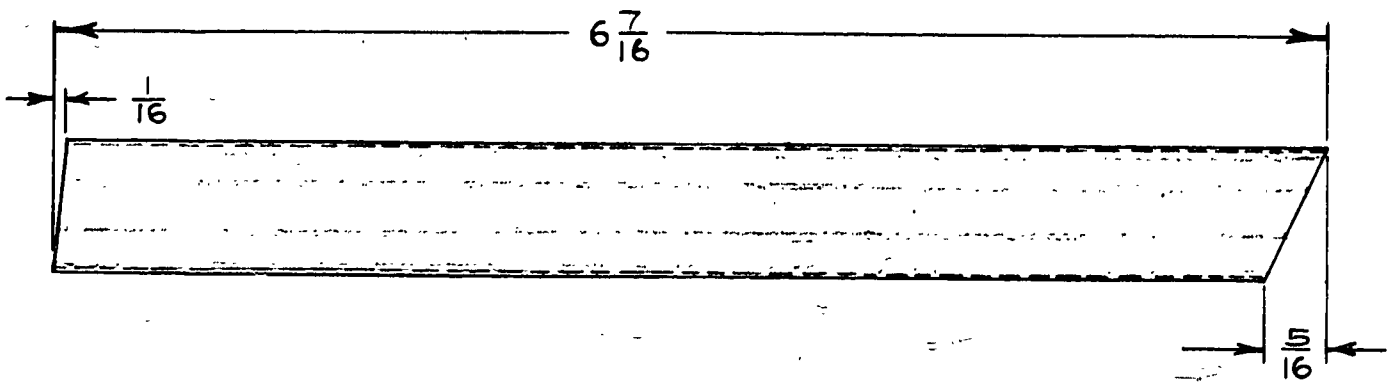

SPECIAL "PER SHIP" TABLE FOR J3

WING ASS'Y	PER SHIP
WOOD SPAR WING	23
METAL SPAR WING	24

LIMITS, SHOP PRACTICES AND FINISH, UNLESS OTHERWISE NOTED, TO BE IN ACCORDANCE WITH PIPER SPECIFICATIONS #9 AND #10.

LET.	REVISION	DATE	SR.	BY
C	METAL SPAR REF. ADDED FOR J3	11-4-43		R.E.T.
B	J3 MODEL REF. ADDED	6-18-43		I. D.B.
A	84761-2 WAS 84761	6-3-43		R.F.F.

MODEL	PER SHIP	NEXT ASSEMBLY	SUPERSEDES	SUPERSEDED BY
J3	SEE TABLE	12902, 13042		
L-4A	22	13852, 13902, 16621	11982-22	

PIPER AIRCRAFT CORP.
LOCK HAVEN, PENNA.

84761	DWG. REF. ONLY	RIB BRACE SECTION
		6 7/16 L PIPER SECTION 84761-2
PART No.	No. REQ.	SIZE DESCRIPTION MATERIAL

SCALE FULL SIZE

BRACE — WING RIB
2 DIAGONAL

R FRANK	L. E. K.	
5-1-43	5-13-43	
DRAWN	CHECKED	APPROVED

15111

NO. 105-N ALBANENE A. & B. SMITH CO., PGH., PA.

A 189

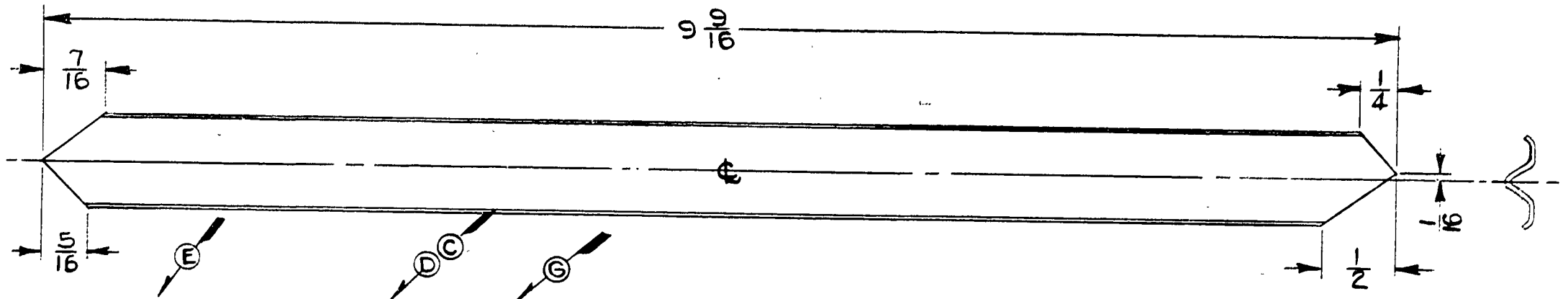

MODEL	PER SHIP	NEXT ASSEMBLY	WING ASSEMBLY
J-5C	22	10712, 10732, 10842,	WOOD SPAR WING
	20	10702, 10692, 10109	METAL SPAR WING
J3	22	12902, 13042,	WOOD SPAR WING
	24	13052, 13022	METAL SPAR WING
L-4A	22	12902, 13042, 13052, 13022	WOOD SPAR WING
L-14	18	90453, 90458, 90465, 90468, 90478, 90520, 90519, 90528, 90521	

LET	REVISION	DATE	BY
H	REDRAWN WITHOUT CHANGE	6-14-51	I.E.M.
G	J5C WOOD SPAR REF. CAN.	11-30-45	D.A.W.
F	J5C N.A. 10109 REMOVED	10-31-45	L.E.K.
E	L-14 MODEL REF. ADDED	3-20-45	H.M.Z.
D	METAL SPAR REF. ADDED FOR J5C	11-23-43	I.M.M.
C	METAL SPAR REF. ADDED FOR J3	11-4-43	I.D.B.
B	J5C MODEL REF. ADDED	10-19-43	I.D.B.
A	J3 MODEL REF. ADDED	8-18-43	I.D.B.

MODEL	PER PLANE	NEXT ASSEMBLY	SUPERSEDES	SUP. BY
NOTED	NOTED	NOTED	11582-31	

THIS DRAWING IS THE PROPERTY OF THE PIPER AIRCRAFT CORP. AND ITS POSSESSION BY UNAUTHORIZED PERSONS SHALL NOT BE CONSTRUED AS PERMISSION TO REPRODUCE FOR SALE IN WHOLE OR IN PART ANY DEVICES SHOWN THEREON.

PIPER AIRCRAFT CORP.
LOCK HAVEN, PENNA.

PART NO.	NO. REQ.	SIZE	DESCRIPTION / MATERIAL
84761	DWG REF. ONLY		RIB BRACE SECTION
		9 9/16 L.	PIPER SECTION 84761

SCALE FULL SIZE | TOTAL WT.—LBS.
FINISH—PIPER SPECIFICATION # 10
MANUFACTURING PRACTICES—PIPER SPECIFICATION # 9

BRACE—WING RIB
#3 DIAGONAL

DRAFTSMAN	CHECKER	STANDARDS
R. FRANK 5-3-43	L.E.K. 5-13-43	

15121

F

190

A 190

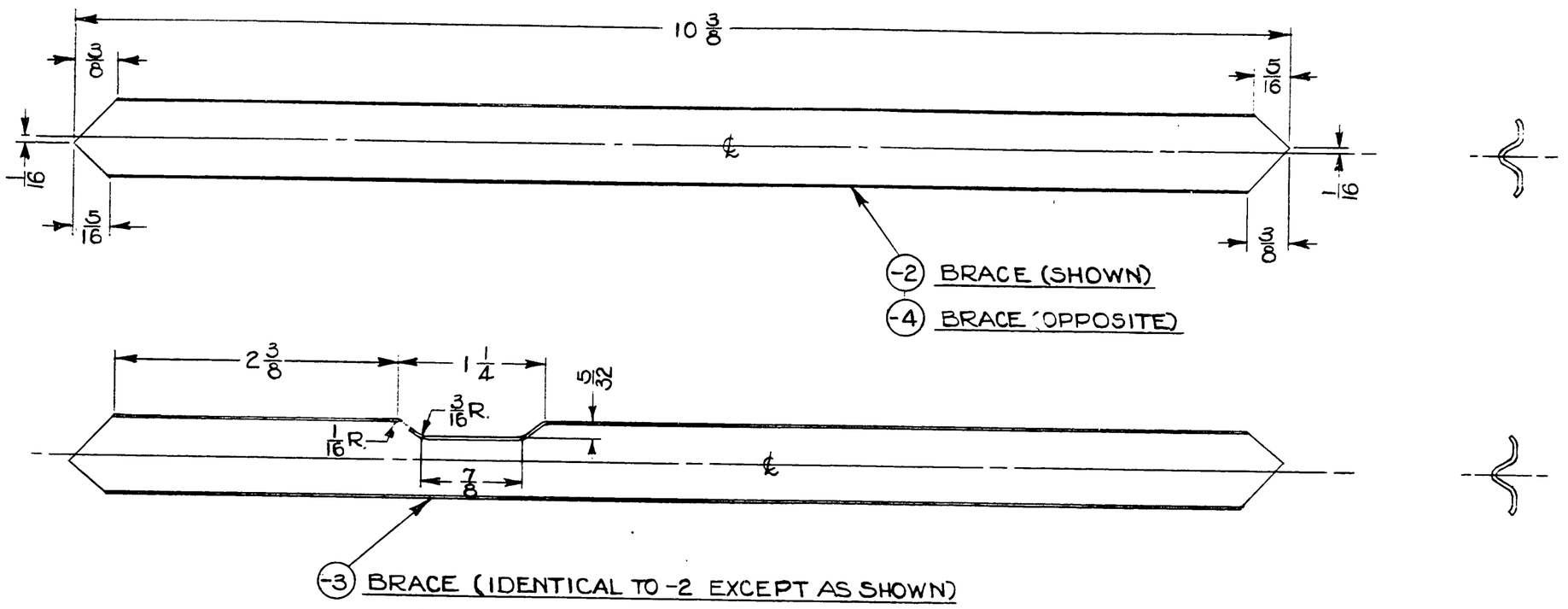

				MODEL	PER PLANE	NEXT ASSEMBLY	SUPERSEDES	SUP. BY

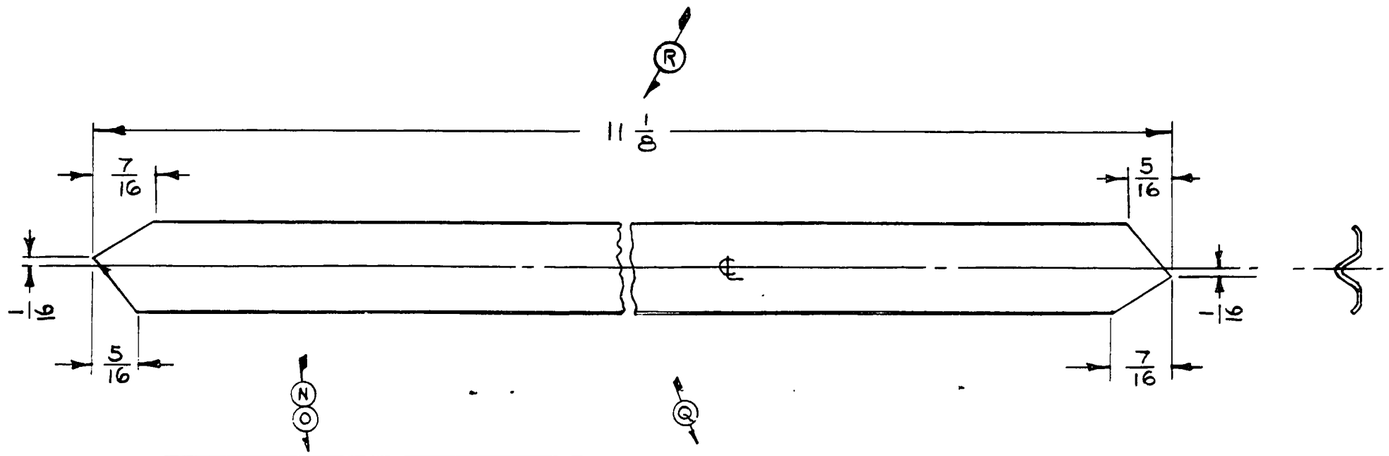

MODEL	PER SHIP	NEXT ASSEMBLY	WING ASSEMBLY
J5C	20L&2R	10732, 10648, 10722, 10692, 10227 10702,	
J3	22L	12902, 13042	WOOD SPAR WING
	24L	13052, 13082	METAL SPAR WING

P

15141 LH. SHOWN
15141-1 R.H. OPPOSITE

LET.	REVISION	DATE	BY
S	J3 N.A. 12902 WAS 12092	6-7-46	JEH
R	11⅛ DIM. WAS 11 1/16	5-22-46	CEV.
Q	J5C N.A. 10227 WAS 10672	12-4-45	LEK.
P	J5C NA 10652 REM.; -1 ADDED	12-4-45	LEK.
O	20L&2R WAS 24 FOR J5C	12-4-45	LEK.
N	'L' ADDED TO PER SHIP FOR J3	12-4-45	LEK.
M	REDRAWN & REVISED	11-1-45	LEK.

THIS DRAWING IS THE PROPERTY OF THE PIPER AIRCRAFT CORP. AND ITS POSSESSION BY UNAUTHORIZED PERSONS SHALL NOT BE CONSTRUED AS PERMISSION TO REPRODUCE FOR SALE, IN WHOLE OR IN PART, ANY DEVICES SHOWN THEREON

MODEL	PER PLANE	NEXT ASSEMBLY	SUPERSEDES	SUP. BY
NOTED	NOTED	NOTED	N982-84	

PIPER AIRCRAFT CORP.
LOCK HAVEN, PENNA.

84761	DWG REF ONLY	RIB BRACE SECTION	
		11⅞L	PIPER SECTION 84761
PART No.	NO. REQ.	SIZE	DESCRIPTION
			MATERIAL
SCALE FULL SIZE			TOTAL WT.—LBS.

FINISH—PIPER SPECIFICATION #10
MANUFACTURING PRACTICES—PIPER SPECIFICATION #9

BRACE—WING RIB #5 DIAGONAL

L.E.K.	H.R.K.		15141
11-1-45	11-8-45		
DRAFTSMAN	CHECKER	STANDARDS	

597

A 597

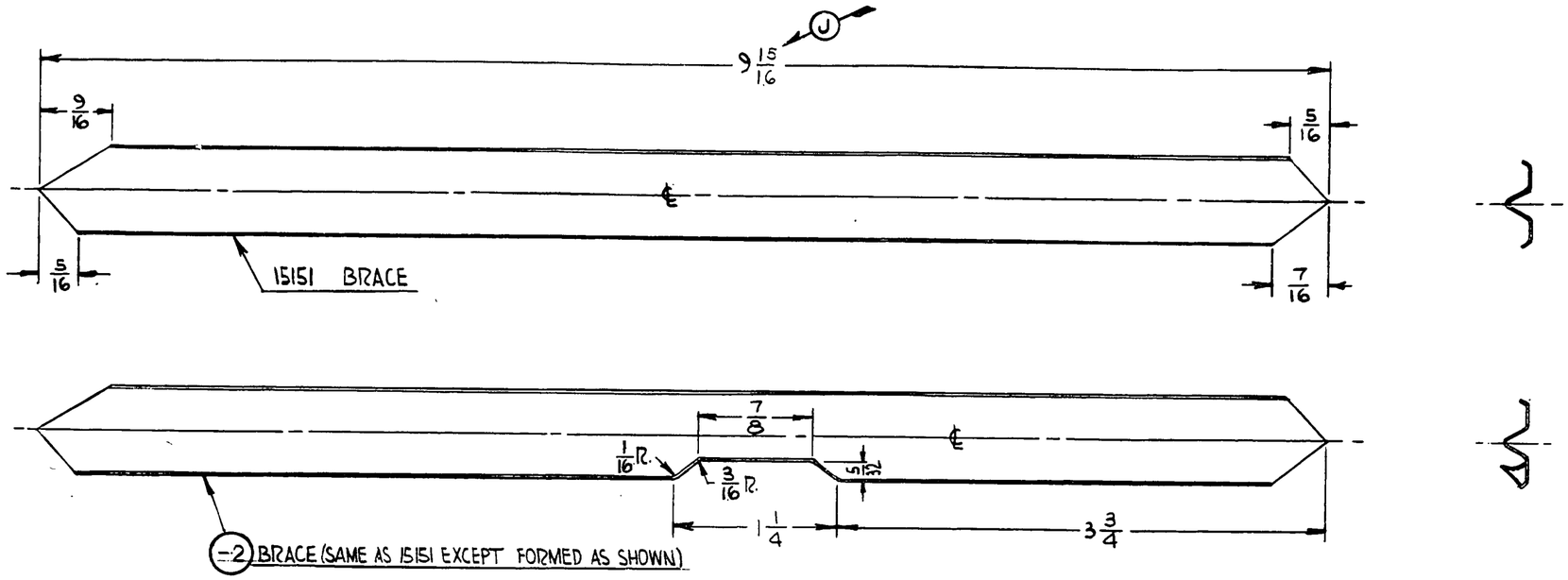

PART NO.	MODEL	PER SHIP	NEXT ASSEMBLY	WING ASSEMBLY
15151	J5C	18	10642, 10692, 10702, 10732, 10109	METAL SPAR WING
	J3	20	13042 13052 13082	WOOD SPAR WING
		22	13042 13052 13082	METAL SPAR WING
15151-2	J3	2	12502	

LET.	REVISION	DATE	BY
J	9 15/16 DIM. WAS 9 7/8	5-22-46	C.E.V.
H	REDRAWN & REVISED	3-6-46	L.R.

THIS DRAWING IS THE PROPERTY OF THE PIPER AIRCRAFT CORP. AND ITS POSSESSION BY UNAUTHORIZED PERSONS SHALL NOT BE CONSTRUED AS PERMISSION TO REPRODUCE FOR SALE, IN WHOLE OR IN PART, ANY DEVICES SHOWN THEREON

MODEL	PER PLANE	NEXT ASSEMBLY	SUPERSEDES	SUP. BY
NOTED	NOTED	NOTED	11382-31	

PIPER AIRCRAFT CORP.
LOCK HAVEN, PENNA.

84761	DWG. REF. NUMBER	RIB BRACE SECTION	
-2	X	9 15/16 L.	PIPER SECTION 84761
	X	9 15/16 L.	PIPER SECTION 84761
PART NO.	NO. REQ.	SIZE	DESCRIPTION
		MATERIAL	
SCALE FULL SIZE		TOTAL WT.-LBS.	
FINISH—PIPER SPECIFICATION #10			
MANUFACTURING PRACTICES—PIPER SPECIFICATION #9			

BRACE-WING RIB #6 DIAGONAL

L.R.	I.D.B.		
3-6-46	3-11-46		
DRAFTSMAN	CHECKER	STANDARDS	15151

598

A 598

SPECIAL "PER SHIP" TABLE FOR J3	
WING ASSY.	PER SHIP
WOOD SPAR WING	21-L, 1-R
METAL SPAR WING	23-L, 1-R

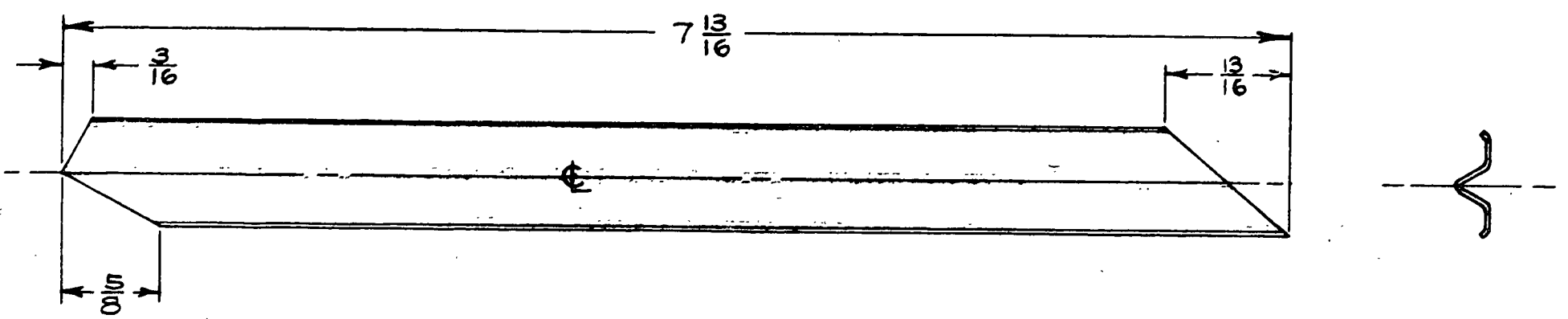

15161 L.H. SHOWN
15161-1 R.H. OPPOSITE

LIMITS, SHOP PRACTICES AND FINISH, UNLESS OTHERWISE NOTED, TO BE IN ACCORDANCE WITH PIPER SPECIFICATIONS #9 AND #10.

LET.	REVISION	DATE	SR.	BY
D	METAL SPAR REF. ADDED FOR J3	11-4-43		R.E.T.
C	J3 MODEL REF. ADDED	8-18-43		I.D.B.
B	L-4A PER SHIP 21 L & 1 R WAS 22	7-30-43		M.G.S.
A	15161-1 ADDED	7-30-43		M.G.S.

MODEL	PER SHIP	NEXT ASSEMBLY	SUPERSEDES	SUPERSEDED BY
J3	SEE TABLE	12902, 13042		
L-4A	21 L, 1 R	13952, 13082	11982-36	

PIPER AIRCRAFT CORP.
LOCK HAVEN, PENNA.

PART No.	No. REQ.	SIZE	DESCRIPTION / MATERIAL
84761	DWG. REF. ONLY		RIB BRACE SECTION
		7 13/16 L.	PIPER SECTION 84761

SCALE FULL SIZE

BRACE — WING RIB
7 DIAGONAL

DRAWN	CHECKED	APPROVED
R. FRANK 5-3-43	L.E.K. 5-13-43	

15161

NO. 100-M ALBANENE A. & B. SMITH CO., PGH., PA.

A 191

A 191

SPECIAL PER SHIP TABLE FOR J3	
WING ASS'Y.	PER SHIP
WOOD SPAR WING	21-L, 1-R
METAL SPAR WING	23-L, 1-R

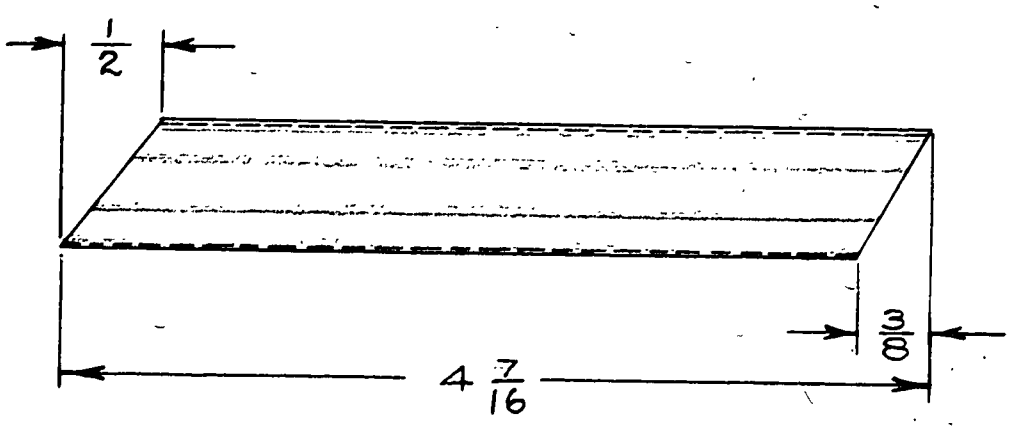

15171 L.H. SHOWN
15171-1 R.H. OPPOSITE

LIMITS, SHOP PRACTICES AND FINISH. UNLESS OTHERWISE NOTED, TO BE IN ACCORDANCE WITH PIPER SPECIFICATIONS #9 AND #10.

LET.	REVISION	DATE	BR.	BY
E	METAL SPAR REF. ADDED FOR J3	11-4-43		R.E.T.
D	J3 MODEL REF. ADDED	8-18-43		I.D.B
C	L-4A PER SHIP 21L-1R WAS 22	7-30-43		M.G.S.
B	15171-1 ADDED	7-30-43		M.G.S.
A	84761-2 WAS 84761	6-3-43		R.D.F.

MODEL	PER SHIP	NEXT ASSEMBLY	SUPERSEDES	SUPERSEDED BY
J3	SEE TABLE	12902, 13042		
L-4A	21L, 1R	13052, 13082	11982-26	

PIPER AIRCRAFT CORP.
LOCK HAVEN, PENNA.

84761	DWG. REF. ONLY	RIB BRACE SECTION	
		4 7/16 L.	PIPER SECTION 84761-2
PART No.	No. REQ.	SIZE	DESCRIPTION
		MATERIAL	

SCALE FULL SIZE

BRACE-WING RIB
#8 DIAGONAL

A 192

A 192

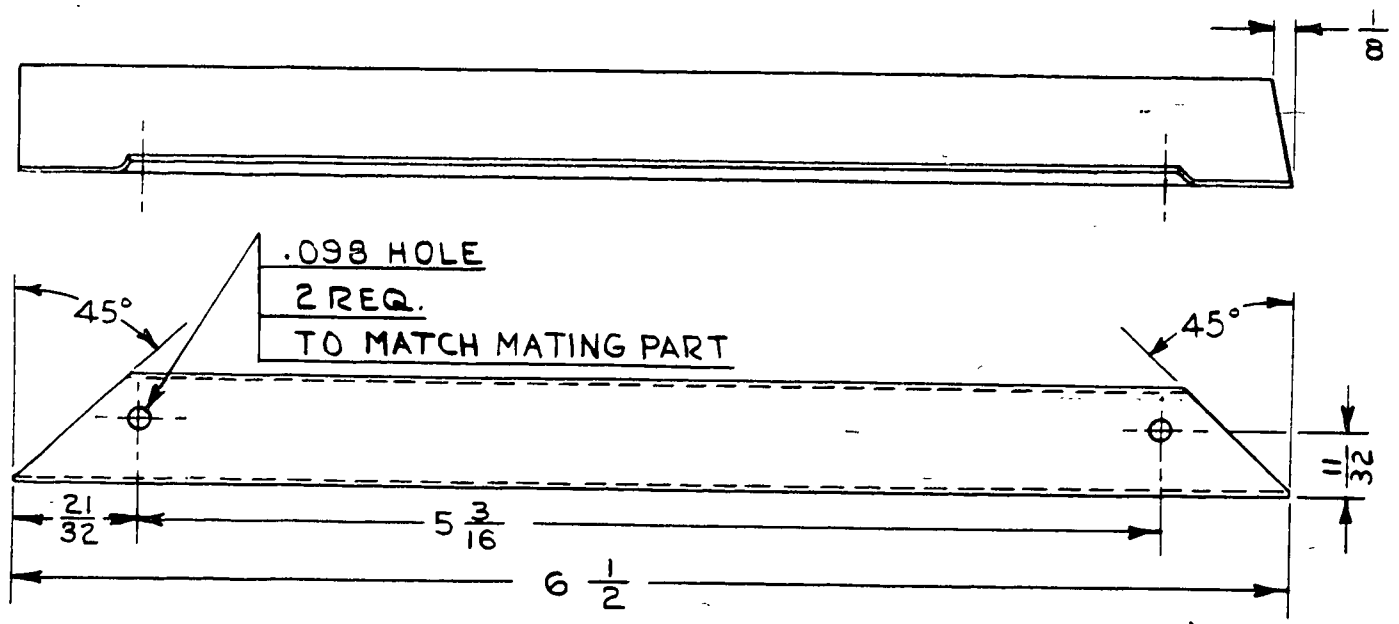

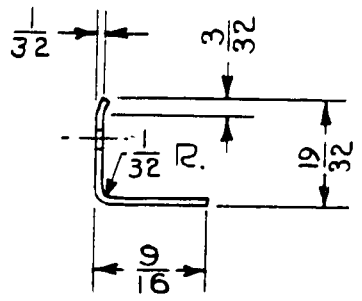



SPECIAL "PER SHIP" TABLE FOR J3	
WING ASSEMBLY	PER SHIP
WOOD SPAR WING	40
METAL SPAR WING	42





LET	REVISION	DATE	BY
F	REDRAWN WITHOUT CHANGE	6-14-51	I.M.M.
E	J3 N.A. 15712 REM.	3-4-46	L.R.
D	METAL SPAR WING 42 P/S WAS 44	3-4-46	L.R.
C	HOLES ADDED	1-23-44	H.M.Z.
B	METAL SPAR REF. ADDED FOR J3	11-3-43	I.D.B.
A	J3 MODEL REF. ADDED	8-18-43	I.D.B.

MODEL	PER PLANE	NEXT ASSEMBLY	SUPERSEDES	SUP. BY
J3	SEE TABLE	13042, 13022, 12902		
		13052, 12662, 16621		
		13042, 16621		
		13022, 12902	12632-3	
L4A	40	13052, 12662	12692-4	

THIS DRAWING IS THE PROPERTY OF THE PIPER AIRCRAFT CORP. AND ITS POSSESSION BY UNAUTHORIZED PERSONS SHALL NOT BE CONSTRUED AS PERMISSION TO REPRODUCE FOR SALE IN WHOLE OR IN PART ANY DEVICES SHOWN THEREON.

PIPER AIRCRAFT CORP.
LOCK HAVEN, PENNA.

PART NO.	NO. REQ.	SIZE	MATERIAL
		.020 x 1 1/8 x 6 1/2	NICRAL OR 61S-TAL

SCALE FULL SIZE | TOTAL WT.—LBS.

FINISH—PIPER SPECIFICATION # 10

MANUFACTURING PRACTICES—PIPER SPECIFICATION # 8

BRACE—WING RIB
#1 ANGLE

DRAFTSMAN	CHECKER	STANDARDS
R. FRANK 5-4-43	L.E.K. 5-13-43	

15191

193

A 193

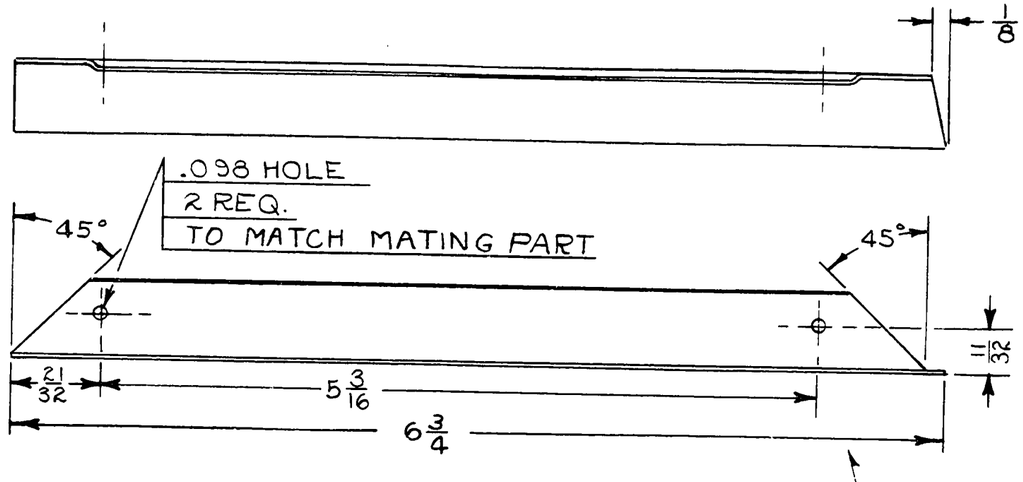

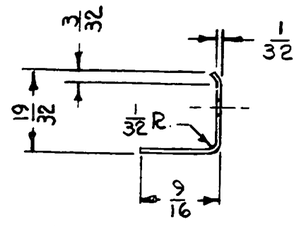

MODEL	PER PLANE	NEXT ASSEMBLY	WING ASSEMBLY
J5C	20	10702, 10718, 10108, 10692, 10732, 10109	
J3	20	12902, 13042,	WOOD SPAR WING
	18	13052, 13022	METAL SPAR WING

LET.	REVISION	DATE	BY
M	J5C; 20 WAS 22. N.A. 10642 REMOVED-J3; 18 WAS 22	6-6-46	RSC
L	HOLES ADDED	1-23-46	WMZ
K	J5C N.A. 10108 WAS 10652	12-5-45	LEK
J	REDRAWN & REVISED	11-1-45	LEK

THIS DRAWING IS THE PROPERTY OF THE PIPER AIRCRAFT CORP. AND ITS POSSESSION BY UNAUTHORIZED PERSONS SHALL NOT BE CONSTRUED AS PERMISSION TO REPRODUCE FOR SALE, IN WHOLE OR IN PART, ANY DEVICES SHOWN THEREON

MODEL	PER PLANE	NEXT ASSEMBLY	SUPERSEDES	SUP. BY
NOTED	NOTED	NOTED	12682-5	

PIPER AIRCRAFT CORP.
LOCK HAVEN, PENNA.

PART No.	No. REQ.	SIZE	MATERIAL
		.020 × 1 1/8 × 6 3/4	NICRAL OR 61S-T ALUM.

DESCRIPTION

SCALE FULL SIZE — TOTAL WT.—LBS.

FINISH—PIPER SPECIFICATION #10

MANUFACTURING PRACTICES—PIPER SPECIFICATION #9

BRACE — WING RIB #2 ANGLE

DRAFTSMAN	CHECKER	STANDARDS
L.E.K. 11-1-45	H.R.K. 11-8-45	

15201

599

A 599

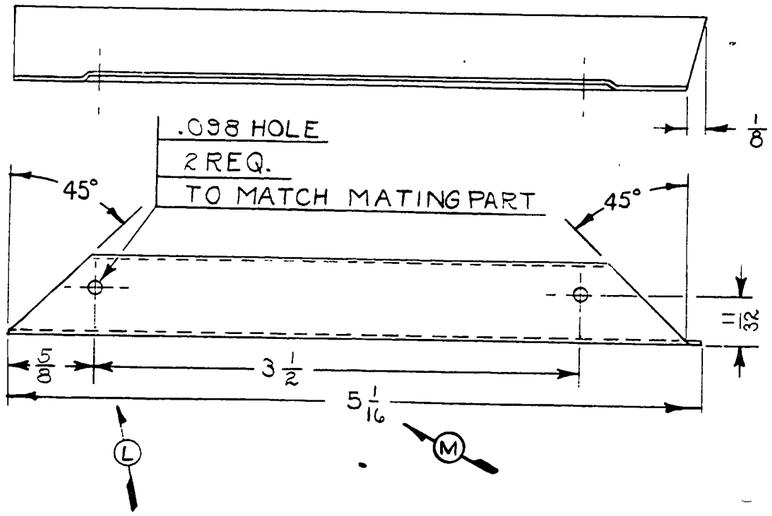

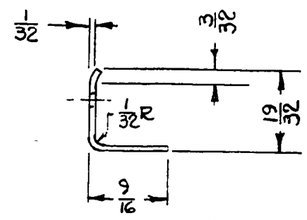

MODEL	PER PLANE	NEXT ASSEMBLY	WING ASSEMBLY
J5C	20	10692, 10702, 10718, 10732, 10108, 10109	
J3	18	12902, 13048,	WOOD SPAR WING
	18	13052, 13028	METAL SPAR WING

LET.	REVISION	DATE	BY
Q	12902 WAS 12092	6-6-46	JEH
P	18 P.P. FOR J3 WAS 20	6-6-46	JEH
O	REMOVED N.A. 10642 FOR J5C	6-6-46	JEH
N	20 P.P. FOR J5C WAS 22	6-6-46	JEH
M	5 7/16 DIM. WAS 5	5-22-46	CE
L	HOLES ADDED	1-24-46	HMZ
K	J5C N.A. 10108 WAS 10652	12-5-45	LEK
J	REDRAWN & REVISED	11-1-45	LEK

THIS DRAWING IS THE PROPERTY OF THE PIPER AIRCRAFT CORP. AND ITS POSSESSION BY UNAUTHORIZED PERSONS SHALL NOT BE CONSTRUED AS PERMISSION TO REPRODUCE FOR SALE, IN WHOLE OR IN PART, ANY DEVICES SHOWN THEREON

MODEL	PER PLANE	NEXT ASSEMBLY	SUPERSEDES	SUP. BY
NOTED	NOTED	NOTED	12692-6	

PIPER AIRCRAFT CORP.
LOCK HAVEN, PENNA.

PART No.	No. REQ.	SIZE	DESCRIPTION / MATERIAL
		.020 × 1 1/8 × 5 1/16	NICRAL OR 61S-T ALUM.

SCALE FULL SIZE — TOTAL WT.—LBS.

FINISH—PIPER SPECIFICATION #10

MANUFACTURING PRACTICES—PIPER SPECIFICATION #9

BRACE — WING RIB #3 ANGLE

DRAFTSMAN	CHECKER	STANDARDS
L.E.K. 11-1-45	H.R.K. 11-8-45	

15211

A600

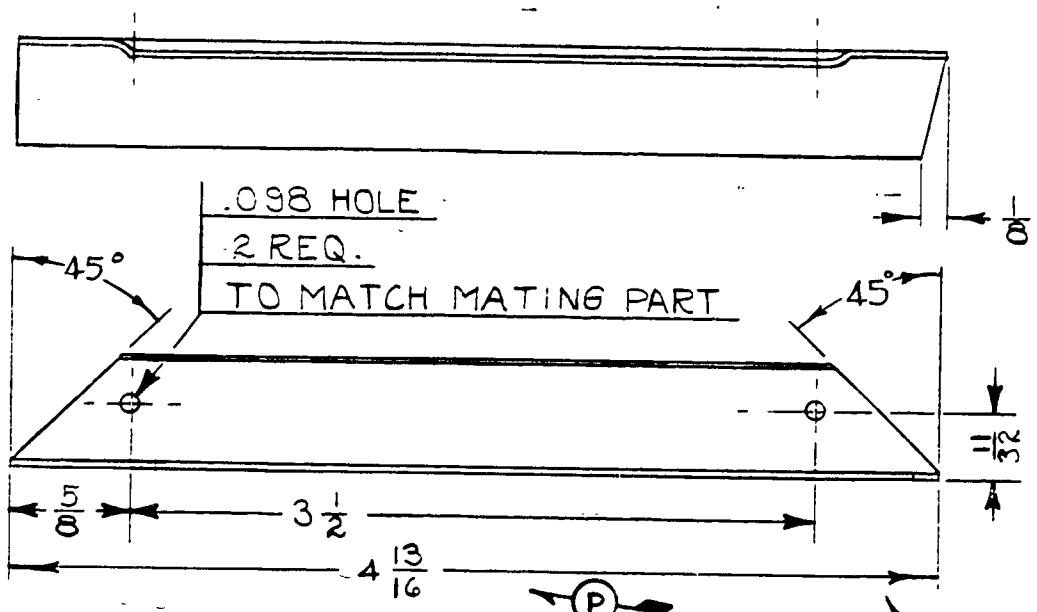

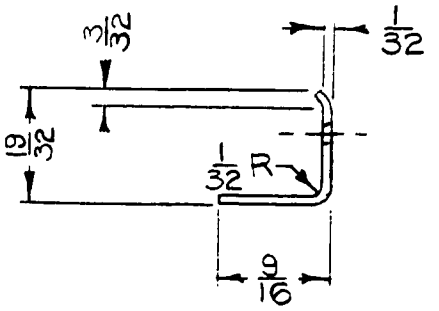

MODEL	PER PLANE	NEXT ASSEMBLY	WING ASSEMBLY
J5C	26	10542, 10652, 10692, 10108, 10109, 10119	WOOD SPAR WING
	26	10702, 10712, 10732, 13452	METAL SPAR WING
J3	18	12902, 13042, 13052	WOOD SPAR WING
	20	13022	METAL SPAR WING
L-4A	18	12902, 13042, 13052 13022	WOOD SPAR WING
L-14	26	90453, 90452, 90462, 90463 90465, 90468, 90478, 90518, 90466, 90520 90519, 90467, 90522, 90521	

LET.	REVISION	DATE	BY
P	4 13/16 WAS 4 3/4	5-21-46	C.E.V.
O	HOLES ADDED	1-23-46	HMZ
N	J5C N.A. 10108 WAS 10652	12-4-45	L.E.K.
M	J5C WOOD SPAR REF. CAN.	11-30-45	D.A.W.
L	J5C N.A. 10109 REMOVED	10-31-45	L.E.K.
K	J5C N.A. 10652 WAS 10108	10-31-45	L.E.K.
J	J5C N.A. 10108 WAS 10652	10-5-45	H.R.K.
H	L-14 NA 90456, 90517 REMOVED	6-13-45	J.B.M.
G	REDRAWN & REVISED	3-21-45	E.L.N.

MODEL	PER PLANE	NEXT ASSEMBLY	SUPERSEDES	SUP. BY
NOTED	NOTED	NOTED	12692-7	

PENCILTEX A. B. B. SMITH CO., PGH., PA.

PIPER AIRCRAFT CORP.
LOCK HAVEN, PENNA.

PART No.	No. REQ.	SIZE	DESCRIPTION
		.020 × 1 1/8 × 4 13/16	NICRAL OR 61S-T AL.
		MATERIAL	

SCALE FULL SIZE — TOTAL WT.—LBS.

FINISH—PIPER SPECIFICATION #10

MANUFACTURING PRACTICES—PIPER SPECIFICATION #9

BRACE - WING RIB #4 ANGLE

DRAFTSMAN	CHECKER	STANDARDS
E.L.N. 3-21-45	R.E.TITUS 3-21-45	

15221

H L 10-19

194

A 194

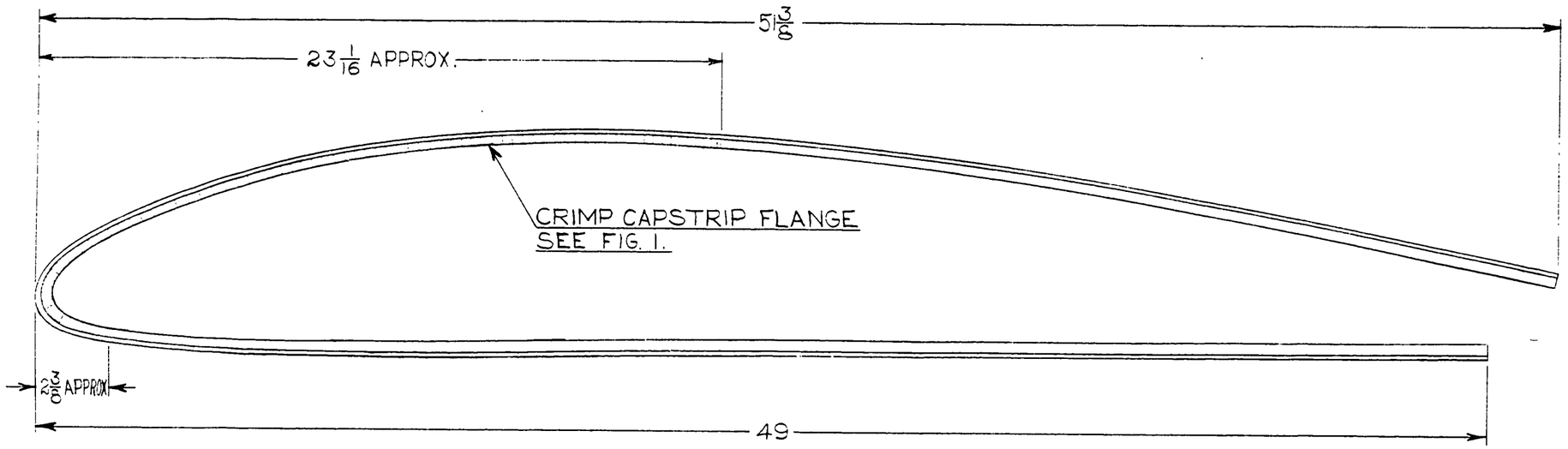

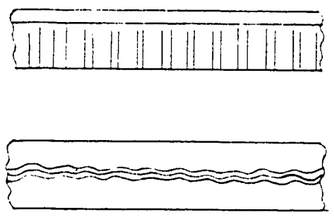

FIG. 1
FULL SIZE

SPECIAL PER SHIP TABLE FOR J3	
WING ASSEMBLY	PER SHIP
WOOD SPAR WING	10
METAL SPAR WING	12

NOTE:
1. FOR CAPSTRIP CONTOUR SEE DRAWING 13814.

LIMITS, SHOP PRACTICES AND FINISH, UNLESS OTHERWISE NOTED, TO BE IN ACCORDANCE WITH PIPER SPECIFICATIONS #9 AND #10.

LET.	REVISION	DATE	SR.	BY
C	NOTCH & LUG REMOVED	2-4-43		C.E.V.
B	METAL SPAR REF ADDED FOR J3	11-4-43		I.D.B.
A	J3 MODEL REF ADDED	8-19-43		I.D.B.

MODEL	PER SHIP	NEXT ASSEMBLY	SUPERSEDES	SUPERSEDED BY
J3	SEE TABLE	13022		
L-4A	10	13022	11991-3	

PIPER AIRCRAFT CORP.
LOCK HAVEN, PENNA.

PART No.	No. REQ.	SIZE	DESCRIPTION / MATERIAL
13814	DWG. REF. ONLY		WING FULL RIB OUTLINE
84771	DWG. REF. ONLY		RIB CAPSTRIP SECTION
X	X	103 3/8 L.	PIPER SECTION 84771

SCALE 3" = 1 FT. & NOTED

CAPSTRIP - WING THREE QUARTER RIB

DRAWN	CHECKED	APPROVED	
H.R.K. 5-4-43	L.E.K. 5-15-43		15262

A

A601

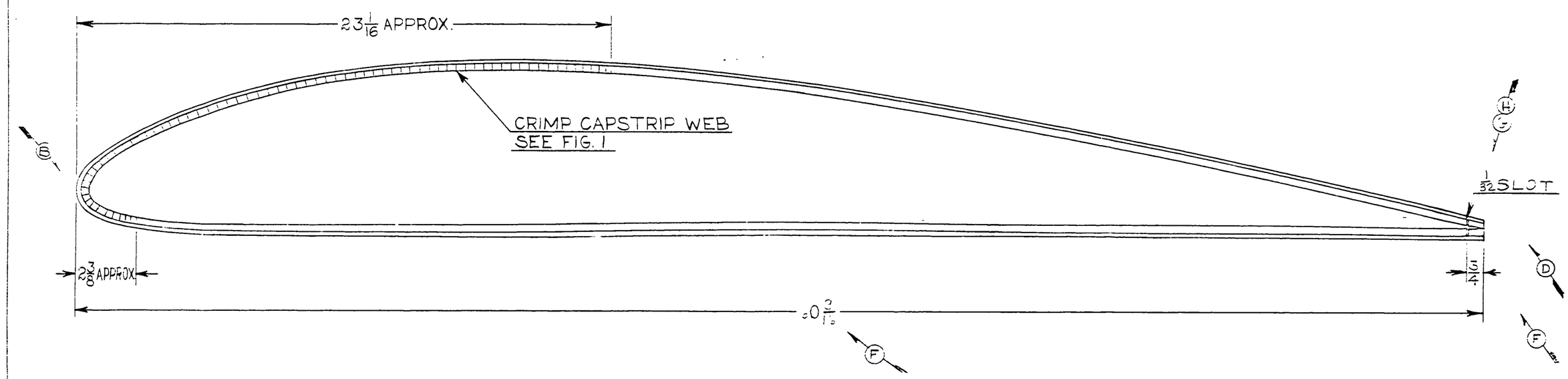

NOTE:
1. FOR CAPSTRIP CONTOUR SEE DRAWING 13814.

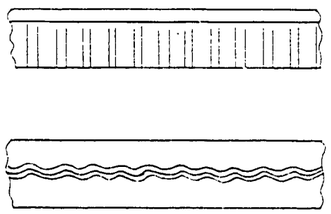

FIG. 1
FULL SIZE

LET.	REVISION	DATE	SR.	BY
H	VIEW REVISED	3-4-46		L.R.
G	NOTCH REM. & SLIT ADDED	2-3-44		C.E.V.
F	3/4 WAS 1 3/16 & 2 3/4 WAS 1	12-8-43		C.E.V.
E	1/32 R. REMOVED	10-15-43		C.J.H.
D	.098 HOLE REMOVED; 1/32 R. ADDED	9-10-43		I.D.B.
C	J3 MODEL RE-ADDED	8-18-43		I.D.B.
B	VIEW REVISED	7-30-43		M.G.S.
A	1 1/16, 5/8 & 1/2 R. REMOVED	7-30-43		M.G.S.

MODEL	PER SHIP	NEXT ASSEMBLY	SUPERSEDES	SUPERSEDED BY
J3	2	12902	11991-9	

PIPER AIRCRAFT CORP.
LOCK HAVEN, PENNA.

LIMITS, SHOP PRACTICES AND FINISH, UNLESS OTHERWISE NOTED, TO BE IN ACCORDANCE WITH PIPER SPECIFICATIONS #0 AND #30.

PART NO.	No. REQ.	SIZE	DESCRIPTION / MATERIAL
13814	DWG. REF. ONLY		WING FULL RIB OUTLINE
84771	DWG. REF. ONLY		RIB CAPSTRIP SECTION
		124 5/16 L.	PIPER SECTION 84771

SCALE 3" = 1 FT. & NOTED

CAPSTRIP – WING AILERON OUTBOARD RIB

DRAWN	CHECKED	APPROVED
H.R.K. 5-5-43	L.R. 5-5-43	

15272

A602

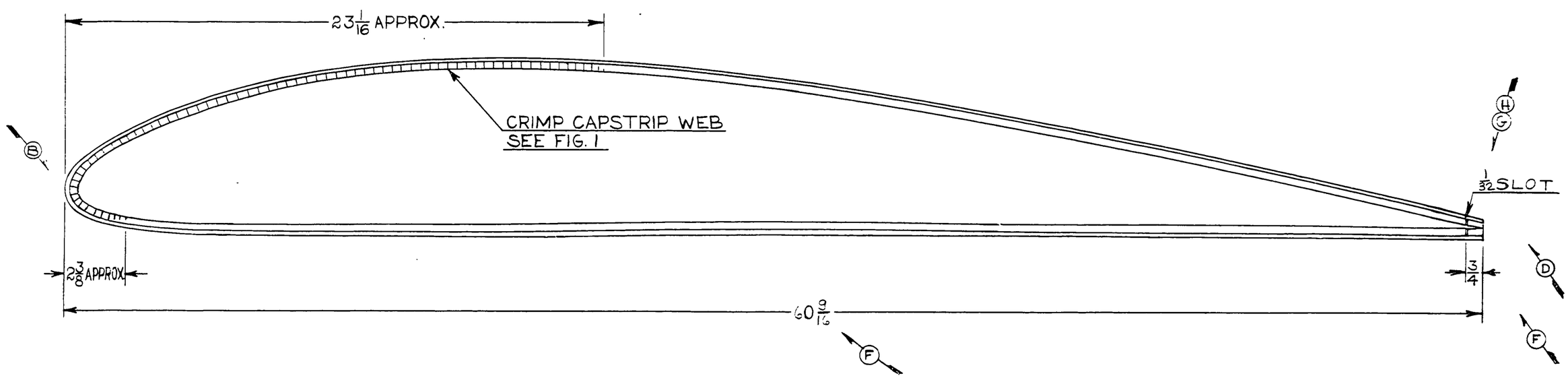

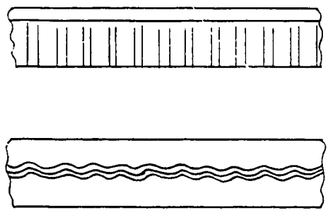

FIG. 1
FULL SIZE

NOTE:
1. FOR CAPSTRIP CONTOUR SEE DRAWING 13814.

LIMITS, SHOP PRACTICES AND FINISH, UNLESS OTHERWISE NOTED, TO BE IN ACCORDANCE WITH PIPER SPECIFICATIONS #0 AND #10.

LET.	REVISION	DATE	SR.	BY
H	VIEW REVISED	3-4-46		L.R.
G	NOTCH REMLE SLOT ADDED	2-8-46		C.E.V.
F	3/4" WAS 1 9/16 & 60 7/8" WAS 61	2-8-46		C.E.V.
E	1/32R. REMOVED	10-15-43		C.J.H.
D	.098 HOLE REMOVED, 1/32 R. ADDED	9-10-43		I.D.B.
C	J3 MODEL REF. ADDED	8-18-43		I.D.B.
B	VIEW REVISED	7-30-43		M.G.S.
A	1 11/16, 5/8 & 1/2R. REMOVED	7-30-43		M.G.S.

MODEL	PER SHIP	NEXT ASSEMBLY	SUPERSEDES	SUPERSEDED BY
J3A, J3	2	12902	11991-9	

PIPER AIRCRAFT CORP.
LOCK HAVEN, PENNA.

PART NO.	No. REQ.	SIZE	DESCRIPTION / MATERIAL
13814	DWG REF ONLY		WING FULL RIB OUTLINE
84771	DWG REF ONLY		RIB CAPSTRIP SECTION
		124 5/16 L.	PIPER SECTION 84771

SCALE 3" = 1 FT. & NOTED

CAPSTRIP – WING
AILERON OUTBOARD RIB

DRAWN	CHECKED	APPROVED
H.R.K. 5-5-43	L.E.K. 5-13-43	

15272

A602

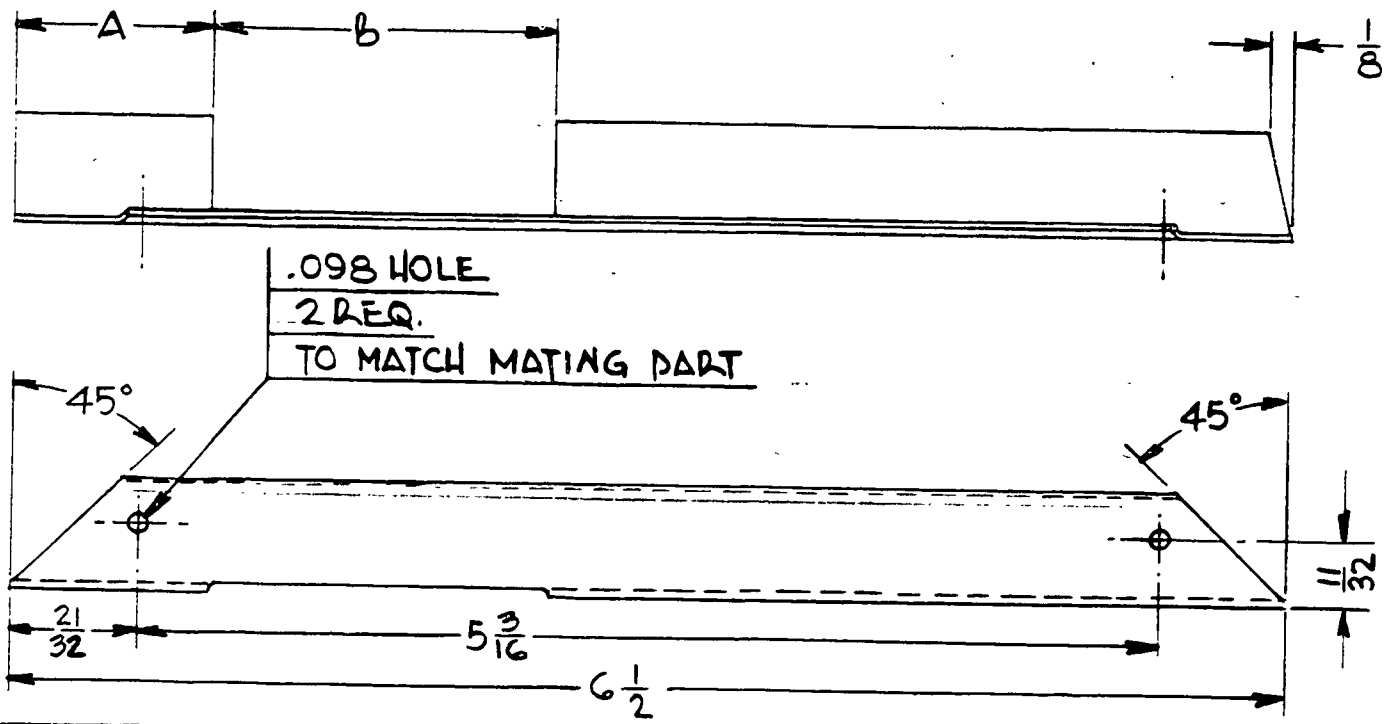

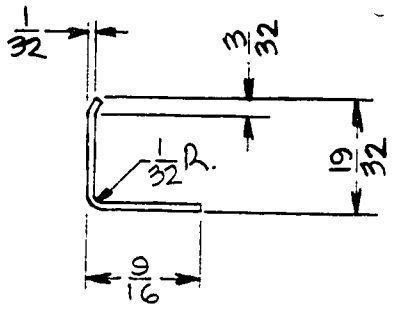

PART NO.	A	B	MODEL	PER PLANE	NEXT ASSEMBLY
15311	1	1 3/4	J3, L-4A	2	13022
15311-2	7/16	1 3/4	J3, L-4A	2	15712
15311-3	1	4 1/2	J3	2	13022

LET	REVISION	DATE	BY
D	REDRAWN WITHOUT CHANGE	6-12-51	M.G.
C	-2, -3, & TABLE ADDED	3-5-46	CLW
B	HOLES ADDED	1-23-46	HMZ
A	J3 MODEL REF ADDED	8-18-43	I.D.B

MODEL	PER PLANE	NEXT ASSEMBLY	SUPERSEDES	SUP. BY

THIS DRAWING IS THE PROPERTY OF THE PIPER AIRCRAFT CORP. AND ITS POSSESSION BY UNAUTHORIZED PERSONS SHALL NOT BE CONSTRUED AS PERMISSION TO REPRODUCE FOR SALE IN WHOLE OR IN PART ANY DEVICES SHOWN THEREON.

PIPER AIRCRAFT CORP.
LOCK HAVEN, PENNA.

PART NO.	NO. REQ.	SIZE	DESCRIPTION / MATERIAL
		.020 × 1 1/8 × 6 1/2	NICRALOR GIS-T ALUM.

SCALE FULL SIZE | TOTAL WT.—LBS.

FINISH—PIPER SPECIFICATION # 10

MANUFACTURING PRACTICES—PIPER SPECIFICATION # 9

BRACE—WING SPECIAL 3/4 RIB #1 ANGLE

DRAFTSMAN	CHECKER	STANDARDS
E. FRANK 5-6-43	L.E.K. 5-13-43	

15311

195

A 195

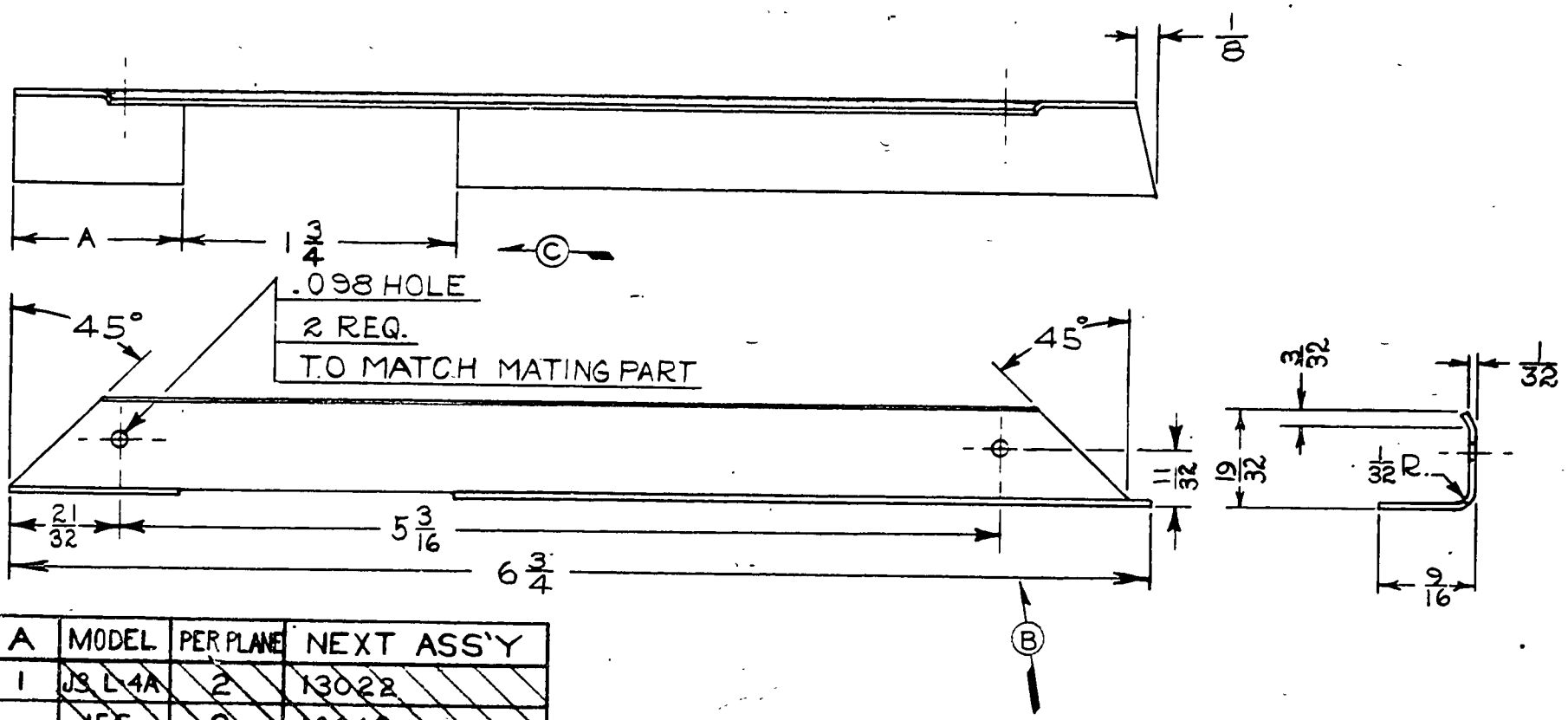

ASS'Y NO.	A	MODEL	PER PLANE	NEXT ASS'Y
15321	1	J3 L-4A	2	13022
15321-2	2	J5C	2	10642
		J3	2	13022

LIMITS, SHOP PRACTICES AND FINISH. UNLESS OTHERWISE NOTED, TO BE IN ACCORDANCE WITH PIPER SPECIFICATIONS #9 AND #10.

LET.	REVISION	DATE	SR.	BY
E	J5C MODEL REF. ADD.-2	3-6-46		C.E.V.
D	TABLE & -2 ADDED	3-6-46		C.E.V.
C	1¾ WAS 1⅝	3-6-46		C.E.V.
B	HOLES ADDED	1-23-46		H.M.Z.
A	J3 MODEL REF. ADDED	8-20-43		I.D.B.

MODEL	PER SHIP	NEXT ASSEMBLY	SUPERSEDES	SUPERSEDED BY
NOTED	NOTED	NOTED		

PIPER AIRCRAFT CORP.
LOCK HAVEN, PENNA.

PART NO.	No. REQ.	SIZE	MATERIAL
		.020 x 1⅛ x 6¾	NICRAL OR 61S-T AL.

SCALE FULL SIZE

BRACE—WING SPECIAL ¾ RIB #2 ANGLE

DRAWN	CHECKED	APPROVED
R. FRANK 5-6-43	L. E. K. 5-13-43	

15321

NO. 100-M ALDANENE — A. & B. SMITH CO., PGH., PA.

196

A 196

SPECIAL "PER SHIP" TABLE FOR J3	
WING ASSEMBLY	PER SHIP
~~WOOD SPAR WING~~	~~20~~
~~METAL SPAR WING~~	~~22~~

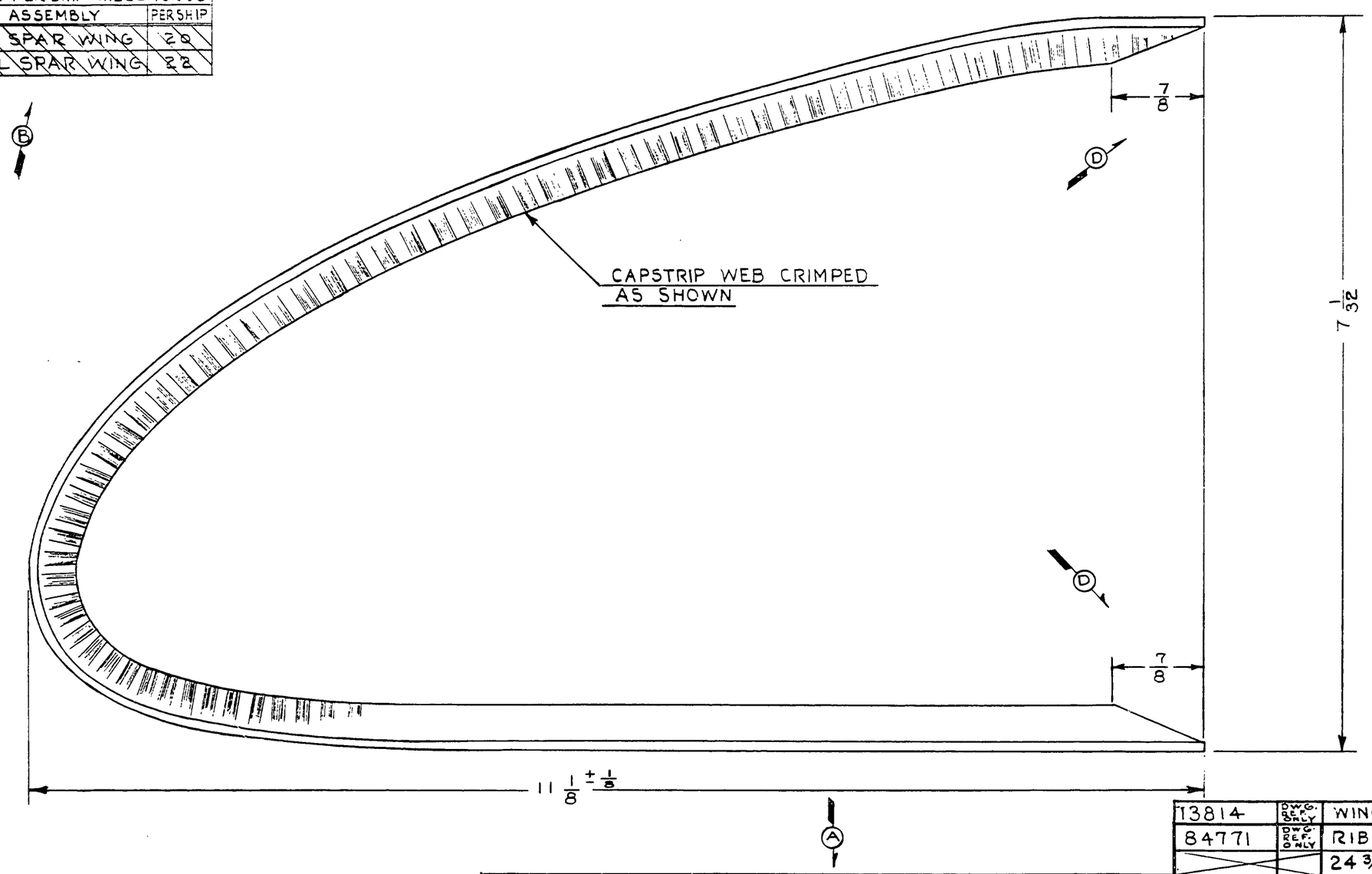

NOTE:
FOR CAPSTRIP CONTOUR SEE DRAWING 13814.

13814	DWG. REF. ONLY	WING FULL RIB OUTLINE	
84771	DWG. REF. ONLY	RIB CAPSTRIP SECTION	
		24 3/4 L.	PIPER SECTION 84771
PART NO.	NO. REQ.	SIZE	DESCRIPTION
		MATERIAL	

SCALE FULL SIZE — TOTAL WT.—LBS.

FINISH—PIPER SPECIFICATION # 13

MANUFACTURING PRACTICES—PIPER SPECIFICATION # 9

MODEL	PER PLANE	NEXT ASSEMBLY	SUPERSEDES	SUP. BY
~~J3~~	~~SEE TABLE~~	~~12662 15712~~	~~11991-7~~	
~~L-4A~~	~~20~~	~~12662~~	~~11991-7~~	

LET	REVISION	DATE	BY
E	REDRAWN WITHOUT CHANGE	6-18-51	I.M.M.
D	ENDS ANGLED TO 7/8 DIM.	3-4-46	L.R.
C	REMOVED 3/32, 7/8 & 1/4 DIM.	2-7-46	C.E.V.
B	METAL SPAR REF ADDED FOR J3	11-3-43	R.E.T.
A	J3 MODEL REF. ADDED	8-18-43	I.D.B.

THIS DRAWING IS THE PROPERTY OF THE PIPER AIRCRAFT CORP. AND ITS POSSESSION BY UNAUTHORIZED PERSONS SHALL NOT BE CONSTRUED AS PERMISSION TO REPRODUCE FOR SALE IN WHOLE OR IN PART ANY DEVICES SHOWN THEREON.

PIPER AIRCRAFT CORP.
LOCK HAVEN, PENNA.

CAPSTRIP—WING NOSE RIB

DRAFTSMAN	CHECKER	STANDARDS
M. G. S. 5-5-43	L. E. K. 5-11-43	

15382

603

A603

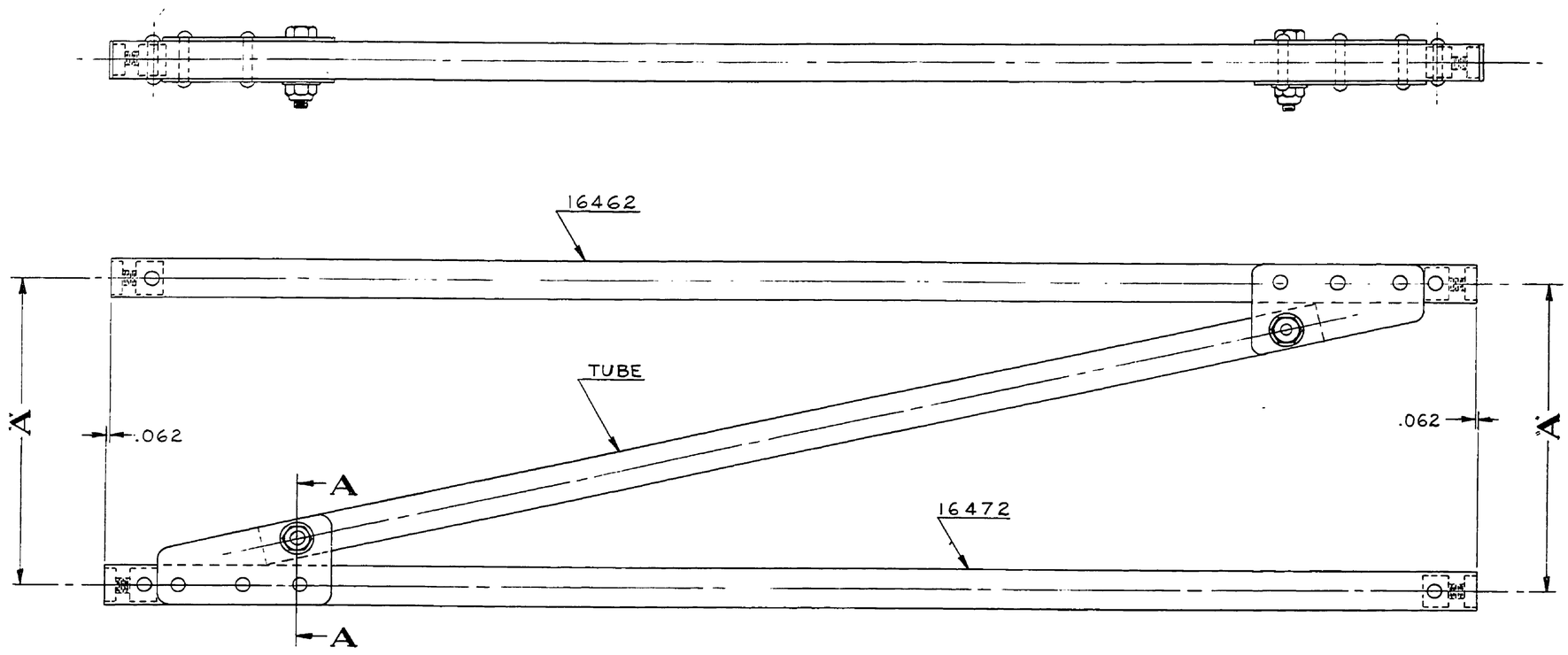

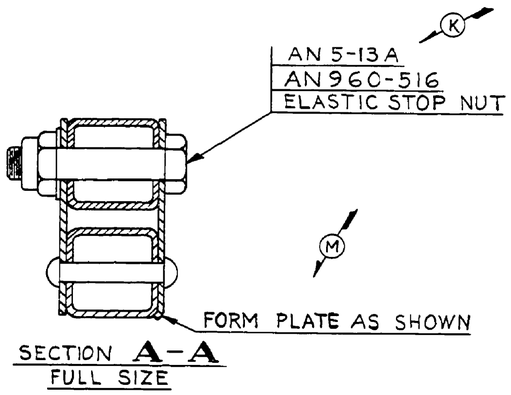

SECTION **A**–**A**
FULL SIZE

PART NO.	TUBE	A	REMARKS
15403	10112-7	7.063	L.H. SHOWN
15403-1	10112-7	7.063	R.H. OPPOSITE
15403-4	11771	5.563	L.H. SHOWN
15403-5	11771	5.563	R.H. OPPOSITE

PART NO.	NO. REQ.	SIZE / DESCRIPTION / MATERIAL
AN5-13A	2	BOLT
-3	—	THESE PARTS OBSOLETE: SEE DWG.
-2	—	OF SAME NO. DATED 6-10-46
AN960-516	2	WASHER
	2	*42E054 ELASTIC STOP NUT
11771	1	BRACE TUBE
10112-7	1	
16472	1	TUBE ASSY.
16462	1	TUBE ASSY.

SCALE 6 IN. = 1 FT. & NOTED — TOTAL WT.—LBS.
FINISH—PIPER SPECIFICATION #10
MANUFACTURING PRACTICES—PIPER SPECIFICATION #9

BRACE ASSEMBLY—
STRUT POINT "N"

LET.	REVISION	DATE	BY
N	REDRAWN WITHOUT CHANGE	5-23-50	C.K.
M	NOTE ADDED	3-2-50	C.K.
L	-4 & -5 ADDED	3-24-48	R.C.
K	AN5-13A WAS AN5-13	1-2-47	I.M.
J	REDRAWN & REVISED	9-25-46	B.C.

MODEL: AV-1B 15556 — PER PLANE — NEXT ASSEMBLY — SUPERSEDES — SUP. BY

THIS DRAWING IS THE PROPERTY OF THE PIPER AIRCRAFT CORP. AND ITS POSSESSION BY UNAUTHORIZED PERSONS SHALL NOT BE CONSTRUED AS PERMISSION TO REPRODUCE FOR SALE, IN WHOLE OR IN PART, ANY DEVICES SHOWN THEREON

PIPER AIRCRAFT CORP.
LOCK HAVEN, PENNA.

B. B. C.	I. D. B.		
9-25-46	9-26-46		15403
DRAFTSMAN	CHECKER	STANDARDS	

791

M K

A791

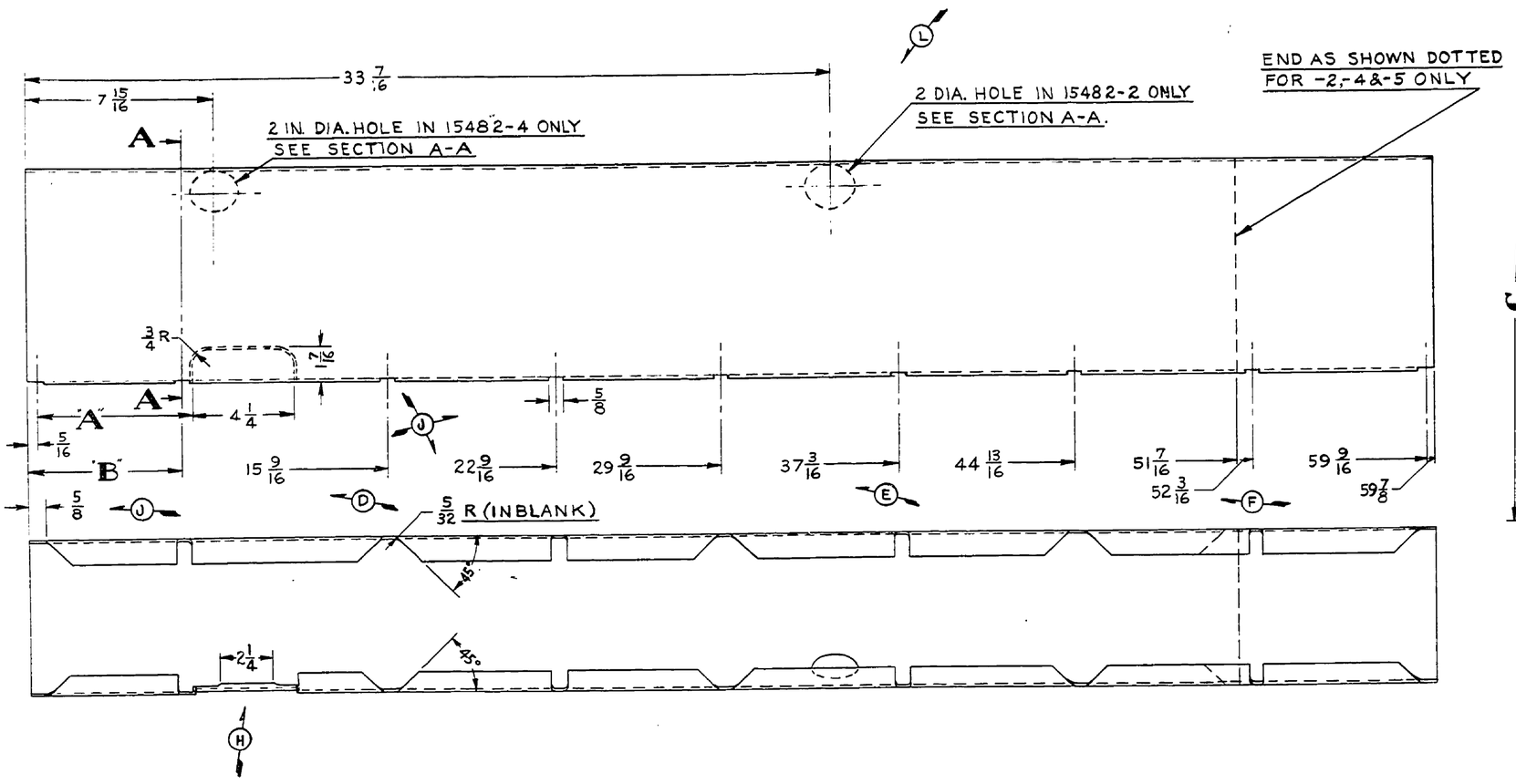

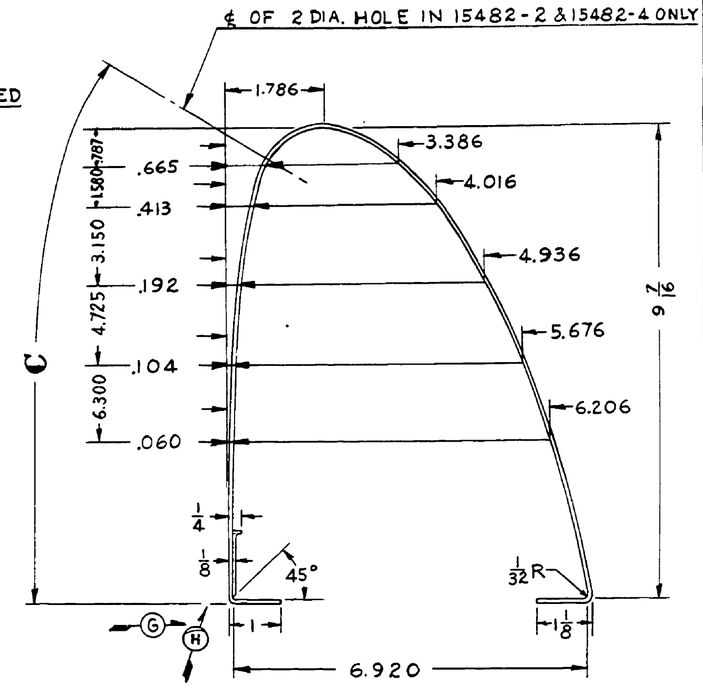

SECTION A-A
6 IN. = 1 FT.

PART NO.	A	B	C	REMARKS
15482	7	6 7/16		L.H. SHOWN
15482-1	7	6 7/16		R.H. OPPOSITE
15482-2	6	5 9/16	9 1/8	L.H. SHOWN & NOTED
15482-3	6	5 9/16		R.H. SAME AS 15482-1 EXCEPT 'A' & 'B' DIMENSION
15482-4	6	5 9/16	8 1/2	R.H. OPPOSITE TO 15482-2 WITH 2 DIA. HOLE NOTED
15482-5	6	5 9/16		L.H. SAME AS 15482-2 WITHOUT 2 DIA. HOLE

LET.	REVISION	DATE	BY
O	REDRAWN WITHOUT CHANGE	5-29-50	C.K.
N	8 1/2 .. AS 9 1/8 ON -4	11-18-49	C.K.
M	-4 & -5 ADDED	6-30-49	R.R.
L	2 DIA. HOLE ADDED	1-25-49	H.K.
K	-2 & -3 ADDED	3-23-48	R.C.
J	3/8 R REMOVED; 5/16 & 3/32 R ADDED	6-16-46	I.D.B.
H	FLANGE REV.; 2 1/4 & 8 1/8 DIM. ADDED	3-12-46	E.L.N.
G	1 WAS 5/8 & 23 5/8 WAS 23 7/16	2-22-46	B.C.
F	44 3/8 WAS 44 5/8 & 52 3/8 WAS 52 1/16	2-22-46	B.C.
E	22 5/8 WAS 22 1/16 & 37 3/8 WAS 37 1/16	2-22-46	B.C.
D	6 1/16 WAS 6 5/16 & 15 5/16 WAS 15 5/16	2-22-46	B.C.
C	REDRAWN & REVISED	7-23-45	K.E.K.

THIS DRAWING IS THE PROPERTY OF THE PIPER AIRCRAFT CORP. AND ITS POSSESSION BY UNAUTHORIZED PERSONS SHALL NOT BE CONSTRUED AS PERMISSION TO REPRODUCE FOR SALE, IN WHOLE OR IN PART, ANY DEVICES SHOWN THEREON

MODEL	PER PLANE	NEXT ASSEMBLY	SUPERSEDES	SUP. BY
J-4A	1	15556		
J3	1	15556		

PIPER AIRCRAFT CORP.
LOCK HAVEN, PENNA.

PART NO.	NO. REQ.	SIZE	DESCRIPTION
		.016 × 23 9/16 × NOTED	3S-1/2H ALUM.
		MATERIAL	

SCALE 3 IN. = 1 FT. & NOTED | TOTAL WT.—LBS.
FINISH—PIPER SPECIFICATION #10
MANUFACTURING PRACTICES—PIPER SPECIFICATION #9

COVER—LEADING EDGE CENTER

DRAFTSMAN	CHECKER	STANDARDS
C. E. K. 7-23-45	R. E. T. 7-24-45	

15482

A792

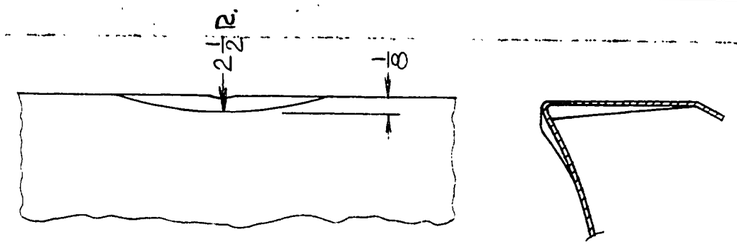

FIG. 1
FULL SIZE

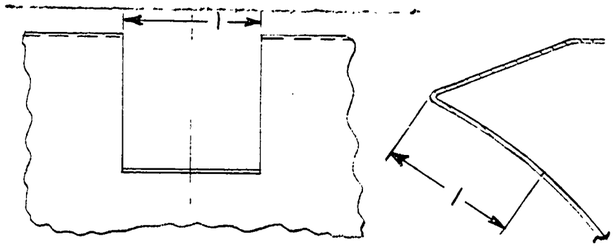

FIG. 2

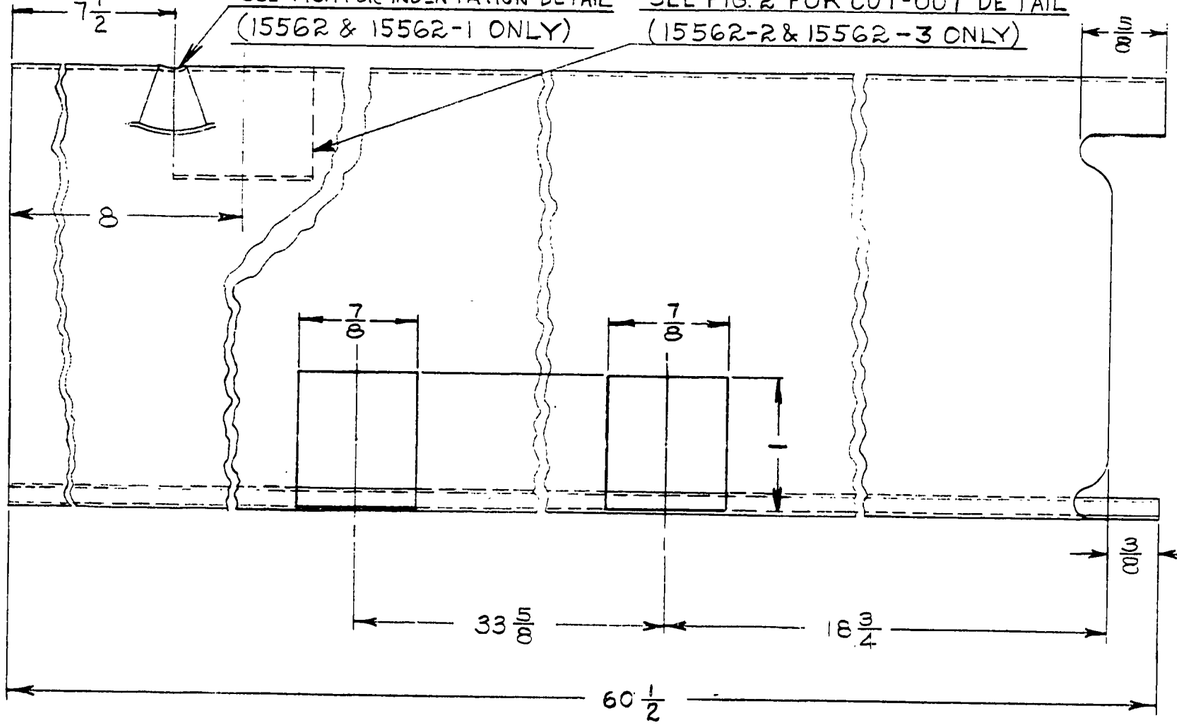

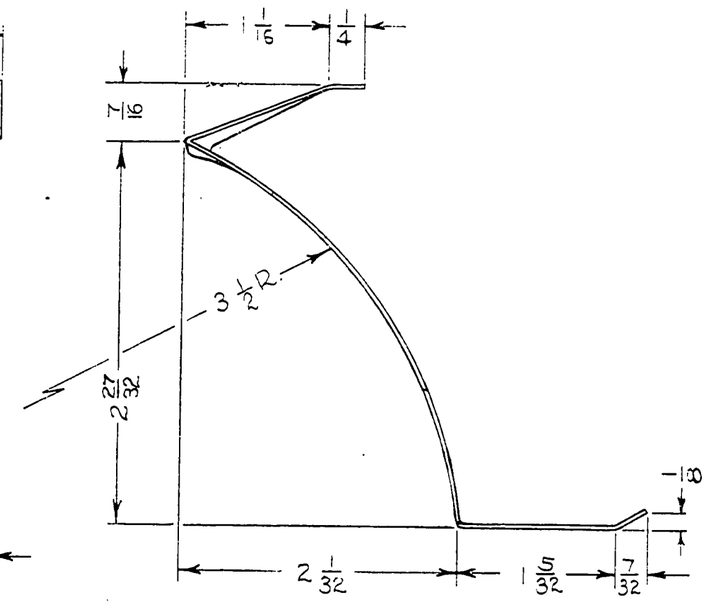

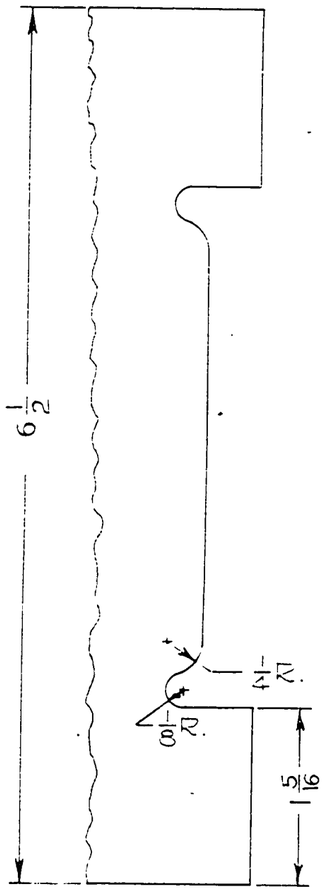

FLAT PATTERN
OF CUTOUT END

15562 L.H. SHOWN & NOTED
15562-1 R.H. OPPOSITE & NOTED
15562-2 L.H. SHOWN & NOTED
15562-3 R.H. OPPOSITE & NOTED

ALL BEND RADII ARE 1/32 IN.

LIMITS. SHOP PRACTICES AND FINISH. UNLESS OTHERWISE NOTED. TO BE IN ACCORDANCE WITH PIPER SPECIFICATIONS #9 AND #10.

LET.	REVISION	DATE	BY
C	-2 & -3 ADDED	11-6-42	H.K.
B	INDENTATION ADDED	2-22-46	L.R.
A	7/8 × 1 HOLES WERE 1 DIA. HOLES	2-22-46	L.R.

MODEL	PER SHIP	NEXT ASSEMBLY	SUPERSEDES	SUP. BY
J3	L18	15556		
L-4A	L18	15558		

PART NO.	NO. REQ.	SIZE	DESCRIPTION / MATERIAL
		.016 × 6 1/2 × 60 1/2	3S-1/2H ALUM.

SCALE FULL SIZE — TOTAL WT.—LBS.

SPAR—WING FALSE
(INBOARD SECTION)

PIPER AIRCRAFT CORP.
LOCK HAVEN, PENNA.

DRAWN	CHECKED	APPROVED
R. FRANK 8-6-43	C.K. 8-10-43	

15562

NO. 199-M ALBANENE A. & B. SMITH CO., PGH., PA.

FOR METAL SPAR WING 604

A604

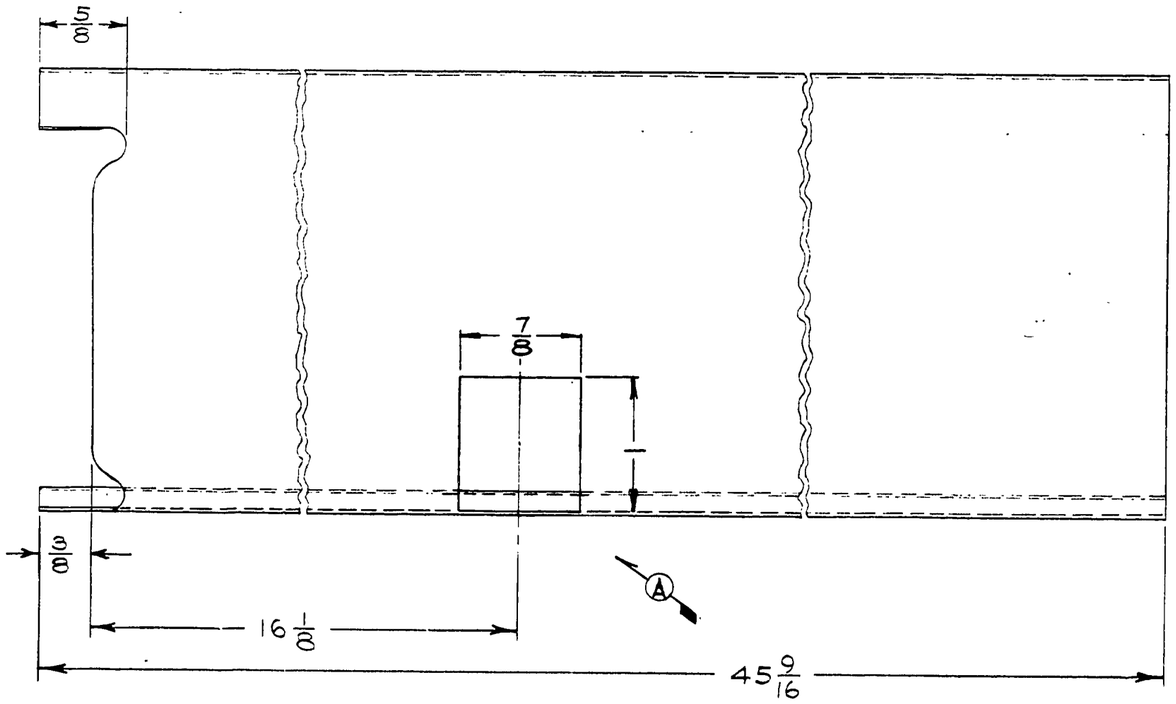

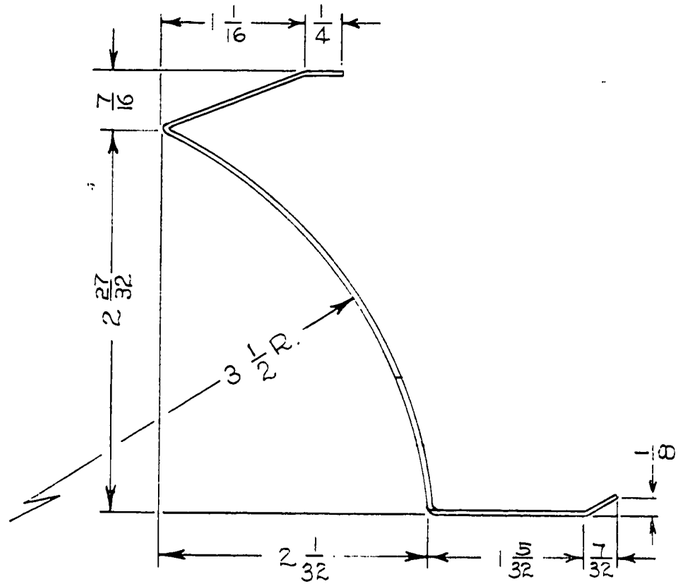

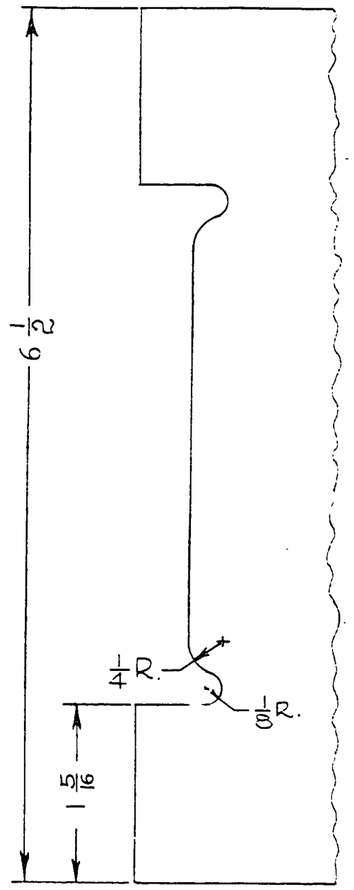

FLAT PATTERN
OF CUTOUT END

15572 L.H. SHOWN
15572-1 R.H. OPPOSITE

ALL BEND RADII ARE 1/32 IN.

LIMITS, SHOP PRACTICES AND FINISH. UNLESS OTHERWISE NOTED, TO BE IN ACCORDANCE WITH PIPER SPECIFICATIONS #9 AND #10.

LET.	REVISION	DATE	BY
A	7/8 × 1 HOLE WAS 1 DIA. HOLE	2-22-46	L.R.

MODEL	PER SHIP	NEXT ASSEMBLY	SUPERSEDES	SUP. BY
J3	L.R.	15556		
L-4A	L.R.	15556		

PIPER AIRCRAFT CORP.
LOCK HAVEN, PENNA.

PART NO.	NO. REQ.	SIZE	DESCRIPTION
		.016 × 6 1/2 × 45 9/16	3S-1/2H ALUM.
		MATERIAL	

SCALE FULL SIZE — TOTAL WT.—LBS.

SPAR- WING FALSE
(OUTBOARD SECTION)

DRAWN	CHECKED	APPROVED
R. FRANK 8-6-43	C.K. 8-10-43	

15572

FOR METAL SPAR WING

NO. 186-M ALBANENE A. & B. SMITH CO., PGH., PA.

A605

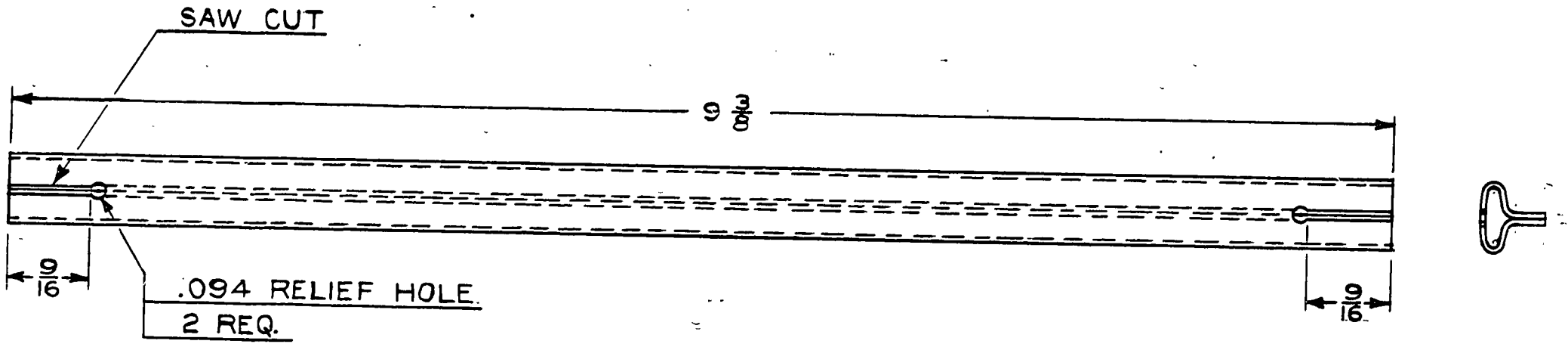

LIMITS, SHOP PRACTICES AND FINISH. UNLESS OTHERWISE NOTED, TO BE IN ACCORDANCE WITH PIPER SPECIFICATIONS #9 AND #10.

MODEL	PER SHIP	NEXT ASSEMBLY	SUPERSEDES	SUPERSEDED BY
L-4A	12	14541	11991-10	
J3	12	14541	11991-10	

LET.	REVISION	DATE	SR.	BY

NO. 196-N ALBANENE A. & B. SMITH CO., PGH., PA.

PIPER AIRCRAFT CORP.
LOCK HAVEN, PENNA.

PART No.	No. REQ.	SIZE	MATERIAL
84771	DWG. REF. ONLY		RIB CAPSTRIP SECTION
		9 3/8 LONG	PIPER SECTION 84771

DESCRIPTION

SCALE FULL SIZE

BRACE - AILERON FALSE SPAR

DRAWN	CHECKED	APPROVED
C.K. 7-20-43	L.E.K. 8-10-43	

15581

FOR METAL SPAR WING

A 197

PART NO.	MODEL	PER SHIP	NEXT ASSEMBLY
15631-2	~~J3 L-4A~~	~~2~~	~~14483~~
15631-3	~~J3 L-4A~~	~~2~~	~~14283~~
	~~J3C~~	~~4~~	~~16302 16293~~

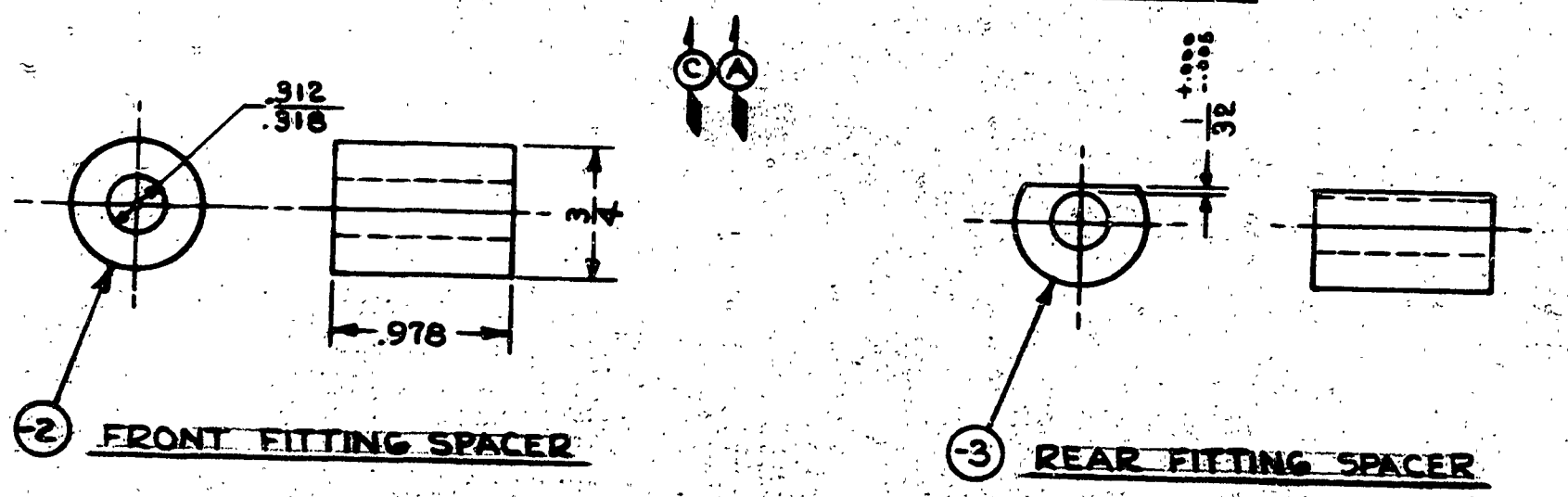

-3 SAME AS -2 EXCEPT AS NOTED

PART NO.	NO. REQ.	SIZE	DESCRIPTION
-3	X	3/4 DIA. X1	2S-O ALUM.
-2	X	3/4 DIA. X1	2S-O ALUM.

MATERIAL

SCALE FULL SIZE | TOTAL WT.—LBS.

FINISH—PIPER SPECIFICATION # 10

MANUFACTURING PRACTICES—PIPER SPECIFICATION # 9

LET	REVISION	DATE	BY
E	REDRAWN WITHOUT CHANGE	6-18-51	[illegible]
D	2S-O ALUM. WAS 2S-½ H ALUM	3-14-46	[illegible]
C	J3C MODEL REF. CANCELED FOR -3	11-30-46	[illegible]
B	2S-½ H ALUM. WAS 3S-½ H ALUM	8-17-45	[illegible]
A	J3C MODEL REF. ADDED [illegible]	11-11-43	[illegible]

MODEL	PER PLANE	NEXT ASSEMBLY	SUPERSEDES	SUP. BY
NOTED	NOTED	NOTED		

THIS DRAWING IS THE PROPERTY OF THE PIPER AIRCRAFT CORP. AND ITS POSSESSION BY UNAUTHORIZED PERSONS SHALL NOT BE CONSTRUED AS PERMISSION TO REPRODUCE FOR SALE IN WHOLE OR IN PART ANY DEVICES SHOWN THEREON.

PIPER AIRCRAFT CORP.
LOCK HAVEN, PENNA.

SPACERS — LIFT STRUT FITTING

DRAFTSMAN	CHECKER	STANDARDS
R. FRANK 8-7-43	C.K. 8-11-43	

15631

198

A 198

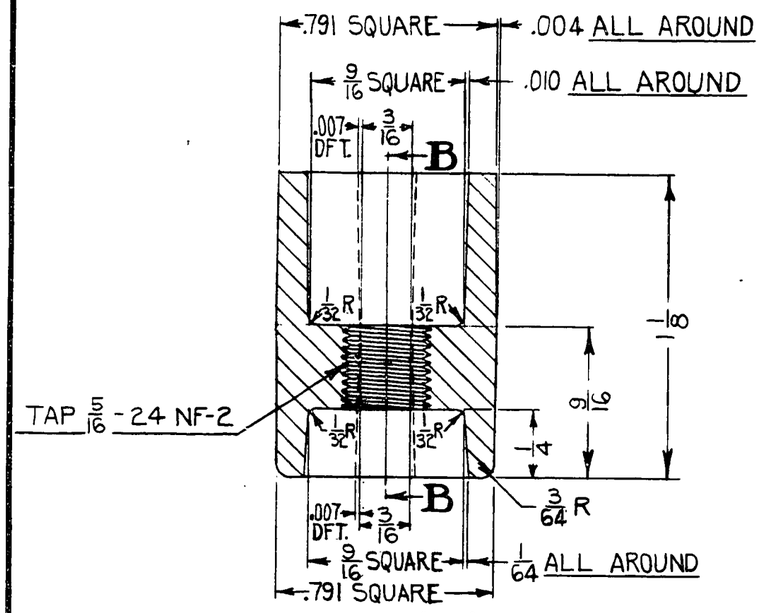

SECTION A-A

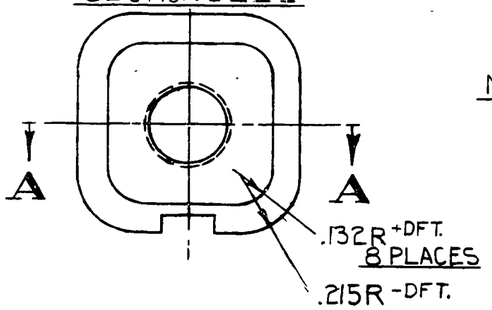

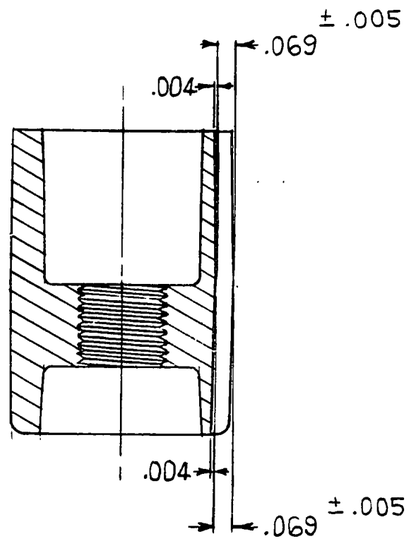

SECTION B-B

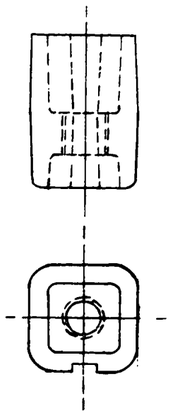

FULL SIZE

MODEL	PER PLANE	NEXT ASSEMBLY	SUPERSEDES
J3	24	14828, 14232, 16462, 16472	12491
J5C	32	14822, 16472, 14852, 14868, 14872, 16462	12491

NOTES:

4. PLUG TO FIT INTO ALCOA SECTION T-182.
3. ALCOA DIE NO. 5308-X.
2. TOLERANCE: DECIMAL DIM. ± .003
   FRACTIONAL DIM. ± .010
1. GATE & FINS TRIMMED TO WITHIN .010 OF EDGES.

THIS DRAWING IS THE PROPERTY OF THE PIPER AIRCRAFT CORP. AND ITS POSSESSION BY UNAUTHORIZED PERSONS SHALL NOT BE CONSTRUED AS PERMISSION TO REPRODUCE FOR SALE, IN WHOLE OR IN PART, ANY DEVICES SHOWN THEREON

LET.	REVISION	DATE	BY
F	J3 N.A. 16462 & 16472 WERE 15692	3-6-46	E.L.N
E	REDRAWN & REVISED	1-31-46	E.L.N

MODEL	PER PLANE	NEXT ASSEMBLY	SUPERSEDES	SUP. BY
NOTED	NOTED	NOTED	NOTED	

PIPER AIRCRAFT CORP.
LOCK HAVEN, PENNA.

PART No.	No. REQ.	SIZE	DESCRIPTION
		13/16 x 13/16 x 1 1/8	ALCOA #380, OR EQUIV.
			MATERIAL

SCALE TWICE SIZE & NOTED — TOTAL WT.—LBS.
FINISH—PIPER SPECIFICATION #10
MANUFACTURING PRACTICES—PIPER SPECIFICATION #9

PLUG - DRAG STRUT

DRAFTSMAN	CHECKER	STANDARDS
E. L. N. 1-31-46	R.E.T. 2-1-46	

15641

606

A606

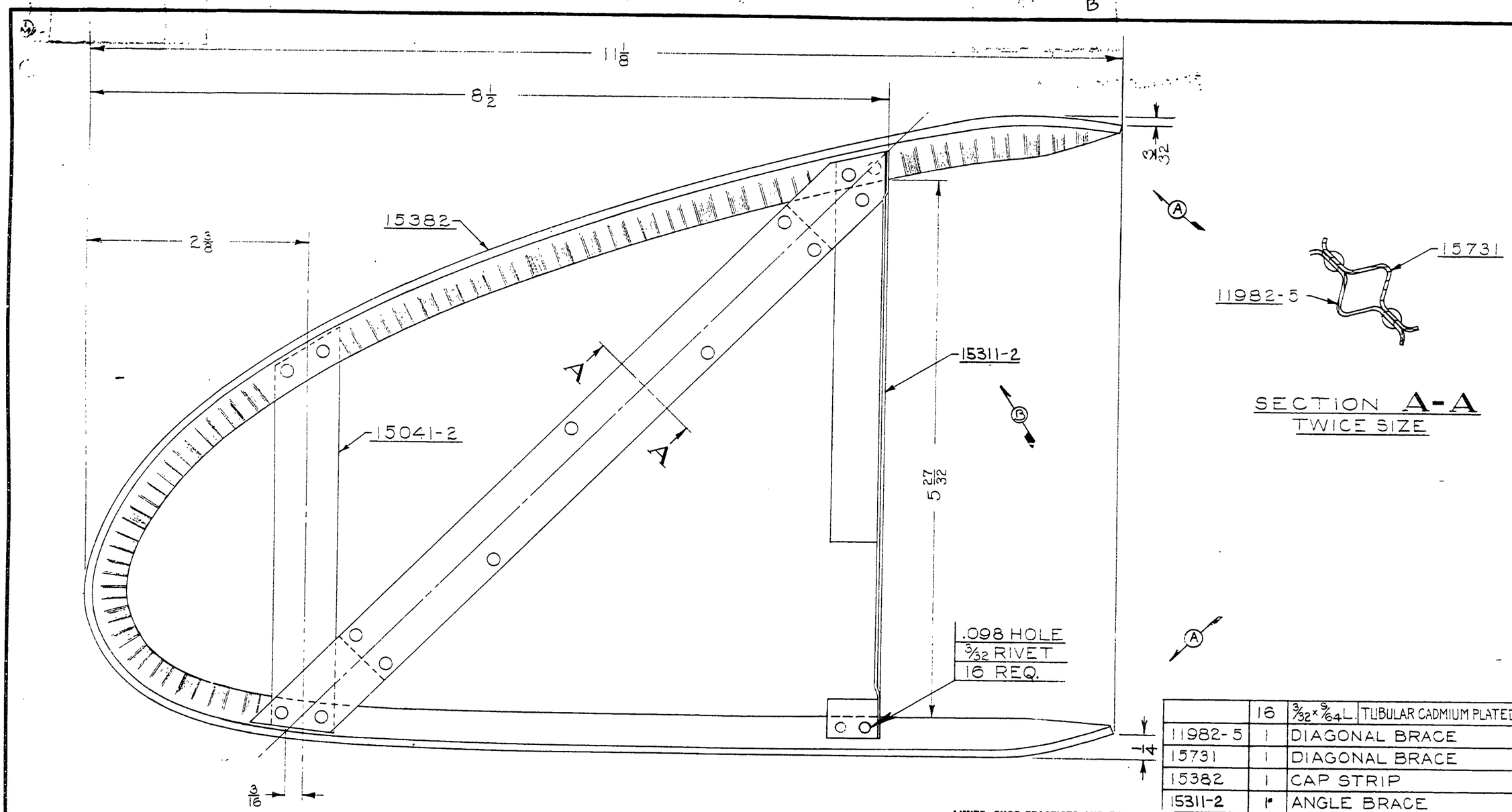

SECTION A-A
TWICE SIZE

NOTE: 1. FOR NOSE RIB CONTOUR SEE DWG. 13814
2. MINIMUM DISTANCE FROM CENTER OF RIVET TO END OR EDGE OF MATERIAL TO BE 1/8 INCH.

LIMITS. SHOP PRACTICES AND FINISH. UNLESS OTHERWISE NOTED. TO BE IN ACCORDANCE WITH PIPER SPECIFICATIONS #9 AND #10.

PART NO.	NO. REQ.	SIZE / DESCRIPTION / MATERIAL
	16	3/32 × 9/64 L. TUBULAR CADMIUM PLATED STEEL RIVET
11982-5	1	DIAGONAL BRACE
15731	1	DIAGONAL BRACE
15382	1	CAP STRIP
15311-2	1	ANGLE BRACE
15041-2	1	VERTICAL BRACE
13814	–	WING FULL RIB OUTLINE

SCALE FULL SIZE & NOTED | TOTAL WT.—LBS.

RIB ASSEMBLY— WING NOSE (SPECIAL)

LET.	REVISION	DATE	BY
B	1/8 DIM. REM.: 15311-2 WAS 15191	3-4-46	L.R.
A	3/32, 1/4, & 3/8 FORM DIM. ADDED	2-8-46	C.E.V.

MODEL	PER SHIP	NEXT ASSEMBLY	SUPERSEDES	SUP. BY
J3L-4A	2	15356		

PIPER AIRCRAFT CORP.
LOCK HAVEN, PENNA.

DRAWN	CHECKED	APPROVED
R.E.T. 8-30-43	C.K. 8-30-43	

15712

NO. 199-M ALBANENE A. & B. SMITH CO., PGH., PA.

B FOR METAL SPAR WING. 607

A607

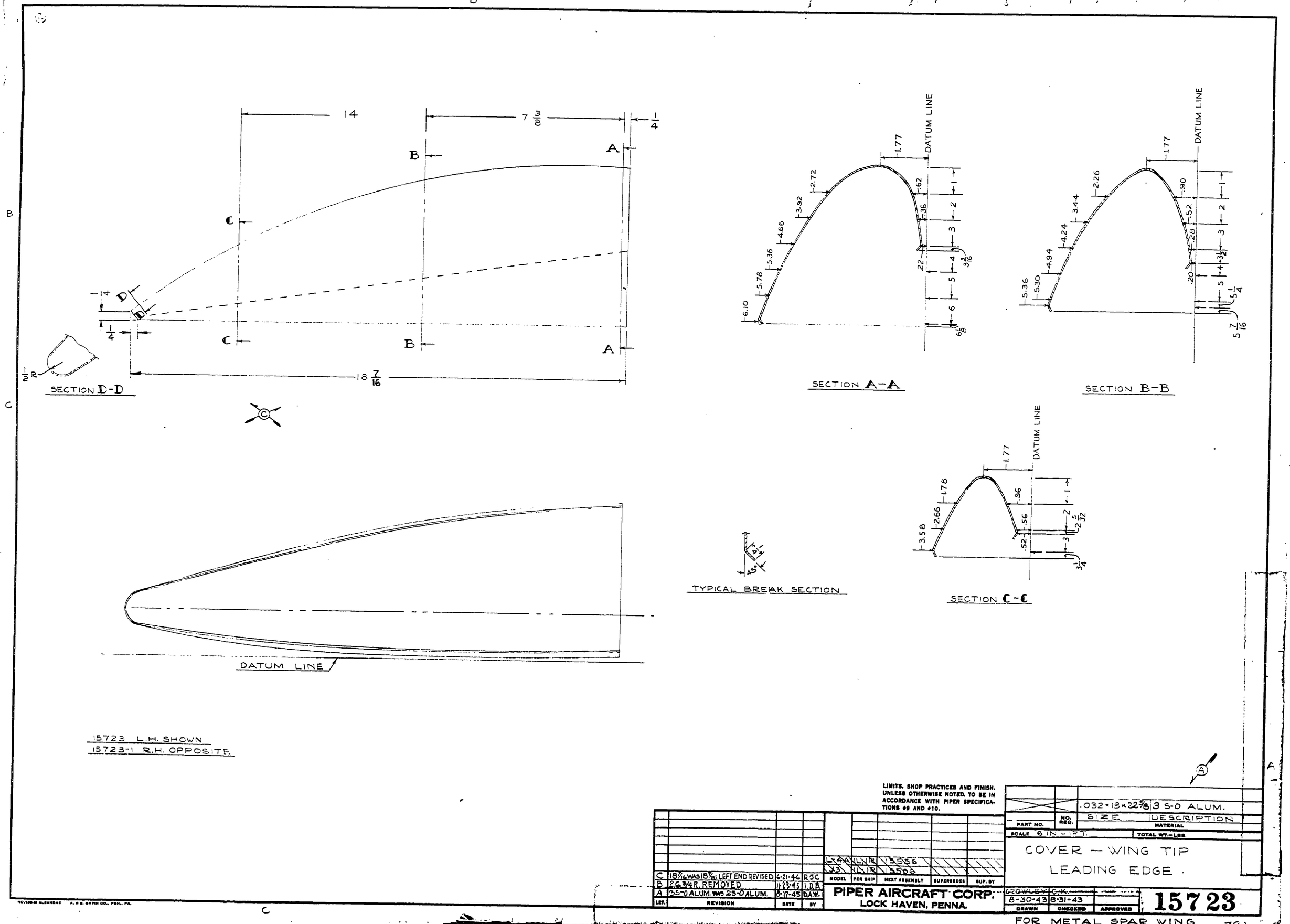

14
7 3/8
1/4
18 7/16
SECTION D-D
SECTION A-A
SECTION B-B
SECTION C-C
DATUM LINE
TYPICAL BREAK SECTION
15723 L.H. SHOWN
15723-1 R.H. OPPOSITE
LIMITS, SHOP PRACTICES AND FINISH, UNLESS OTHERWISE NOTED, TO BE IN ACCORDANCE WITH PIPER SPECIFICATIONS #9 AND #10.
.032×13×22 5/8 3 S-O ALUM.
PART NO. NO. REQ. SIZE DESCRIPTION MATERIAL
SCALE 6 IN = 1 FT. TOTAL WT.—LBS.
COVER — WING TIP
LEADING EDGE
C 18 7/16 WAS 18 7/8; LEFT END REVISED 6-21-46 R.J.C.
B 26 3/4 R. REMOVED 11-23-45 I.D.B.
A 35-0 ALUM. WAS 25-0 ALUM. 8-17-45 D.A.W.
LET. REVISION DATE BY
MODEL PER SHIP NEXT ASSEMBLY SUPERSEDES SUP. BY
PIPER AIRCRAFT CORP.
LOCK HAVEN, PENNA.
GROWLEY C.K.
8-30-43 8-31-43
DRAWN CHECKED APPROVED
15723
FOR METAL SPAR WING
A793

This page intentionally left blank.

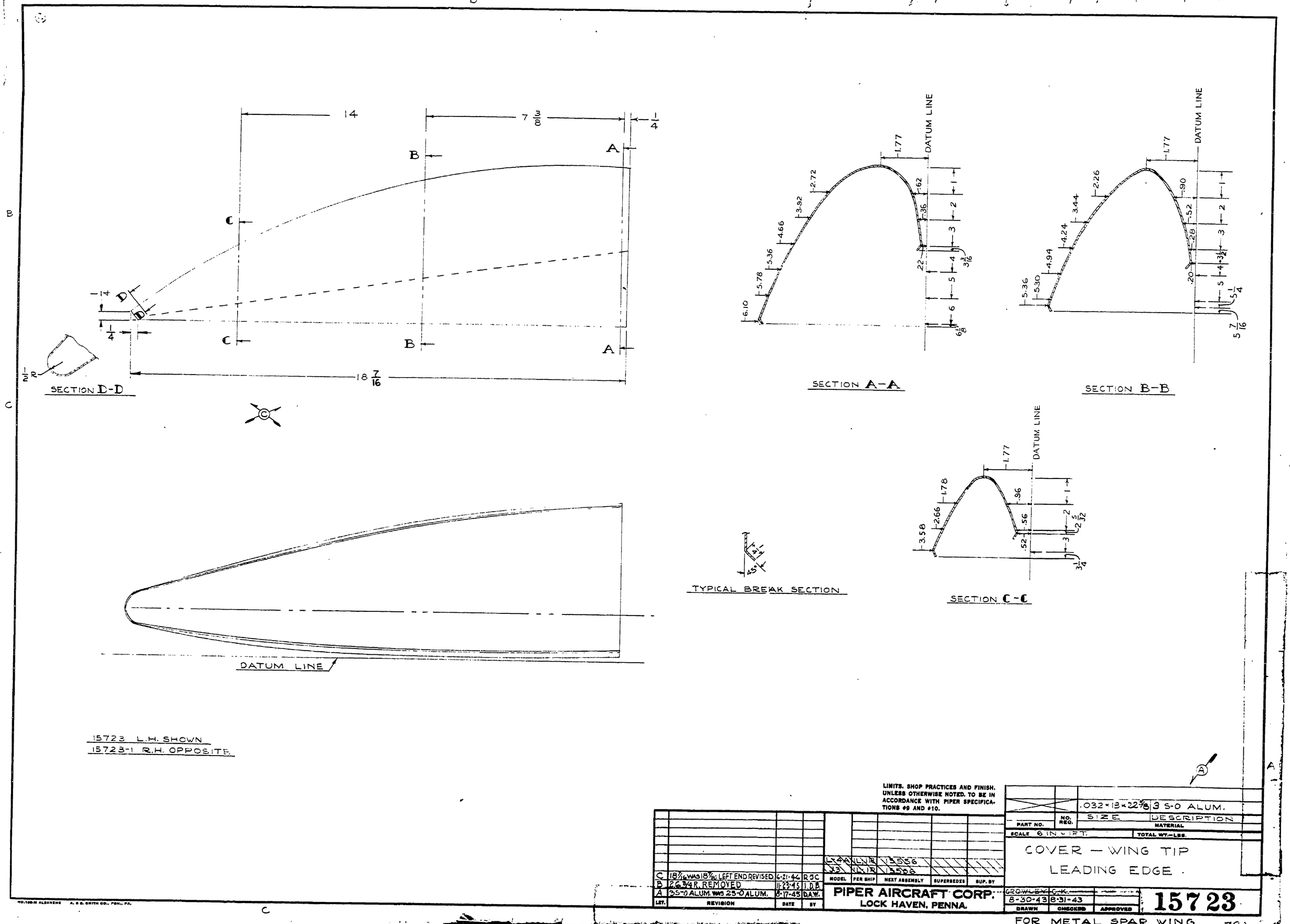

14
7 3/8
1/4
18 7/16
SECTION D-D
SECTION A-A
SECTION B-B
SECTION C-C
DATUM LINE
TYPICAL BREAK SECTION
15723 L.H. SHOWN
15723-1 R.H. OPPOSITE
LIMITS, SHOP PRACTICES AND FINISH, UNLESS OTHERWISE NOTED, TO BE IN ACCORDANCE WITH PIPER SPECIFICATIONS #9 AND #10.
.032×13×22 5/8 3 S-O ALUM.
PART NO. NO. REQ. SIZE DESCRIPTION MATERIAL
SCALE 6 IN = 1 FT. TOTAL WT.—LBS.
COVER — WING TIP
LEADING EDGE
C 18 7/16 WAS 18 7/8; LEFT END REVISED 6-21-46 R.J.C.
B 26 3/4 R. REMOVED 11-23-45 I.D.B.
A 35-0 ALUM. WAS 25-0 ALUM. 8-17-45 D.A.W.
LET. REVISION DATE BY
MODEL PER SHIP NEXT ASSEMBLY SUPERSEDES SUP. BY
PIPER AIRCRAFT CORP.
LOCK HAVEN, PENNA.
GROWLEY C.K.
8-30-43 8-31-43
DRAWN CHECKED APPROVED
15723
FOR METAL SPAR WING
A793

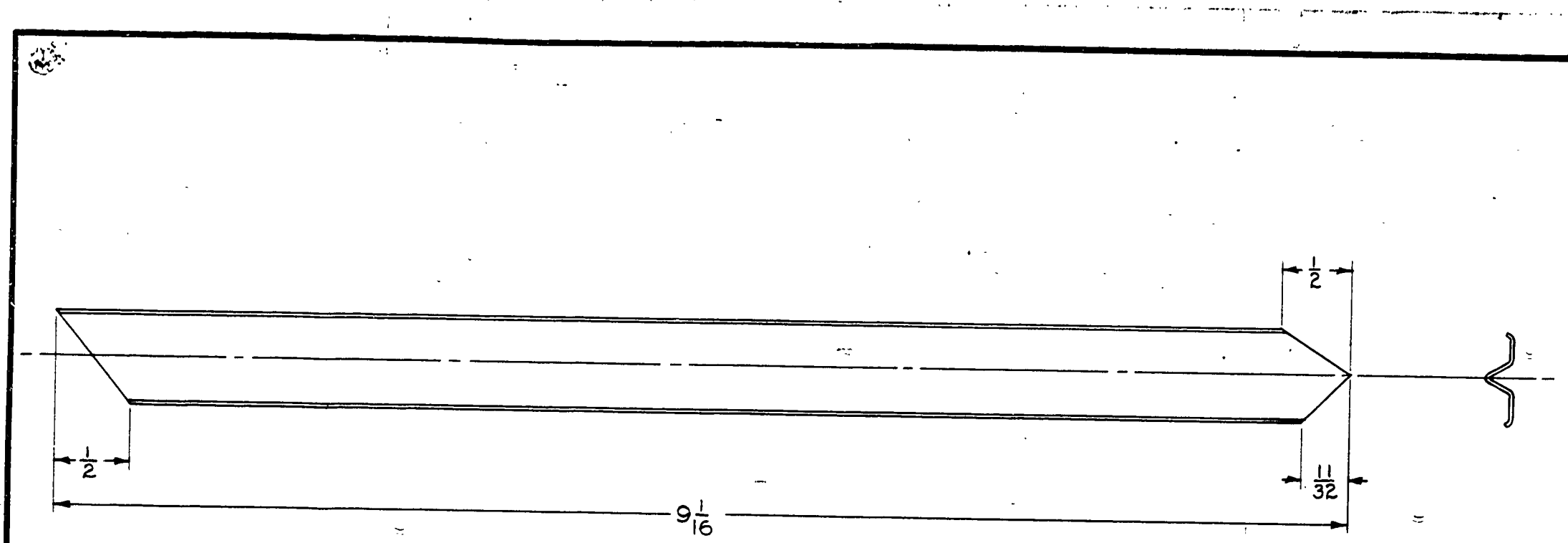

LIMITS. SHOP PRACTICES AND FINISH. UNLESS OTHERWISE NOTED. TO BE IN ACCORDANCE WITH PIPER SPECIFICATIONS #9 AND #10.

LET.	REVISION	DATE	SR.	BY

NO. 198-M ALBANENE A. & B. SMITH CO., PGH., PA.

MODEL	PER SHIP	NEXT ASSEMBLY	SUPERSEDES	SUPERSEDED BY
J3L-4A	2	15712		

PIPER AIRCRAFT CORP.
LOCK HAVEN, PENNA.

PART No.	No. REQ.	SIZE	DESCRIPTION / MATERIAL
84761	DWG. REF. ONLY		RIB BRACE SECTION
		9 1/16 LONG	PIPER SECTION 84761-2

SCALE FULL SIZE

BRACE - NOSE
RIB DIAGONAL

DRAWN	CHECKED	APPROVED
R.E.T. 8-30-43	C.K. 8-30-43	

15731

FOR METAL SPAR WING

199

A 199

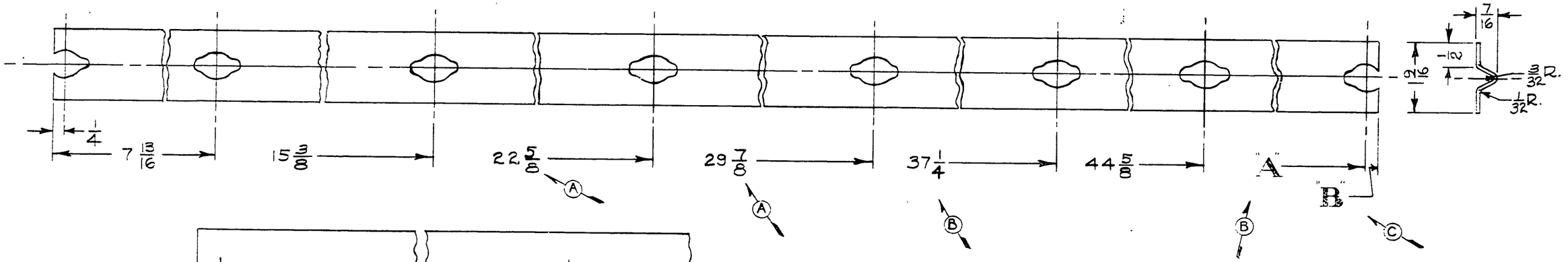

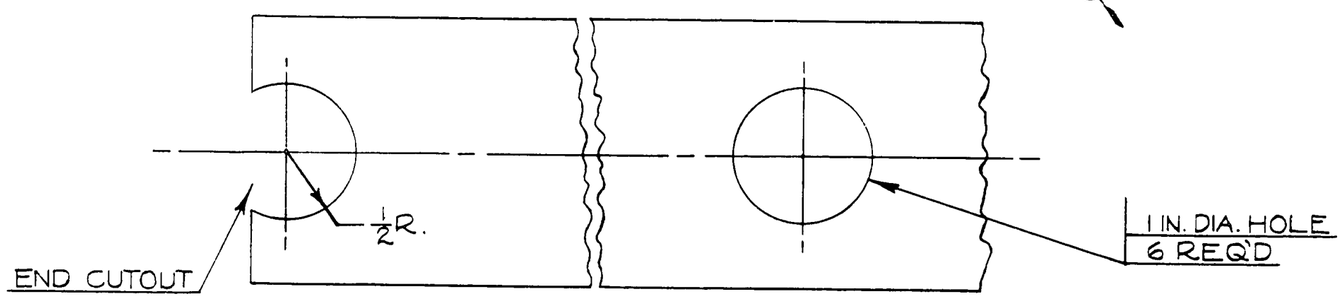

FLAT PATTERN DETAIL
FULL SIZE

PART NO.	A	B
15742	50 3/4	51
15742-2	49 7/8	50 1/8

LIMITS. SHOP PRACTICES AND FINISH. UNLESS OTHERWISE NOTED, TO BE IN ACCORDANCE WITH PIPER SPECIFICATIONS #9 AND #10.

LET.	REVISION	DATE	BY
D	-2 ADDED	7-9-48	H.R.K.
C	51 WAS 51 1/8	2-22-46	C.E.V.
B	37 1/4 WAS 37 1/2 & 50 3/4 WAS 50 1/8	2-22-46	C.E.V.
A	22 5/8 WAS 22 7/8 & 29 1/8 WAS 30 3/8	2-22-46	C.E.V.

MODEL	PER SHIP	NEXT ASSEMBLY	SUPERSEDES	SUP. BY
L-4A	2	15556		
J3	2	15556		

PIPER AIRCRAFT CORP.
LOCK HAVEN, PENNA.

PART NO.	NO. REQ.	SIZE	MATERIAL
		.016 x 2 x NOTED	35-1/2 H ALUM.

SCALE 6"/FT & NOTED — TOTAL WT.—LBS.

REINFORCEMENT—WING LEADING EDGE

DRAWN	CHECKED	APPROVED
R. FRANK 8-31-43	C. K. 8-31-43	

15742

FOR METAL SPAR WING

NO. 195-M ALBANENE A. & B. SMITH CO., PGH., PA.

A608

PART NO.	MODEL	PER SHIP	NEXT ASSEMBLY
15761	J3, L-4A	4	13363
15761-2	J3	2	16243

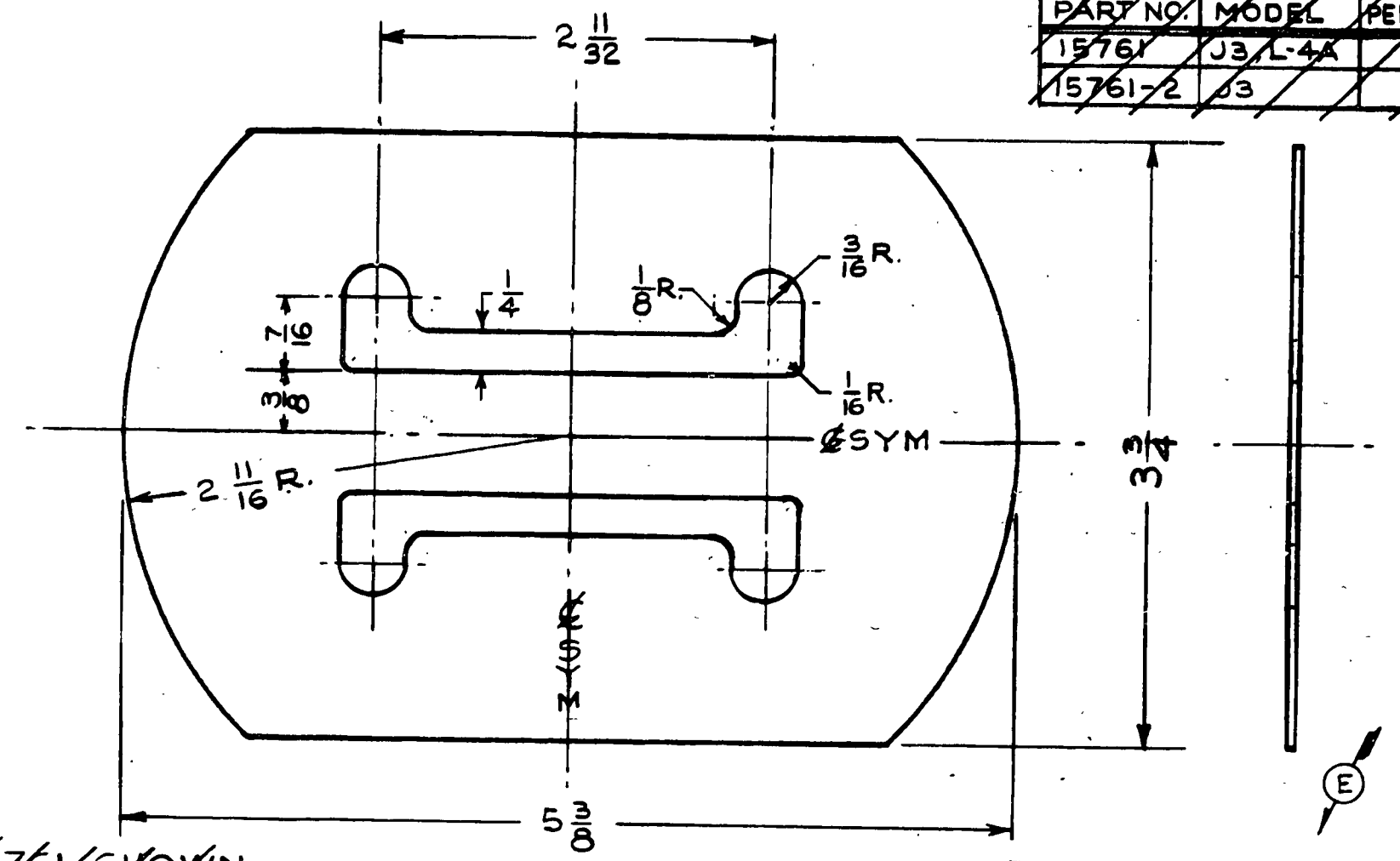

15761 SHOWN
15761-2 IDENTICAL EXCEPT WEB CUT OMITTED.

LIMITS, SHOP PRACTICES AND FINISH. UNLESS OTHERWISE NOTED, TO BE IN ACCORDANCE WITH PIPER SPECIFICATIONS #9 AND #10.

LET.	REVISION	DATE	BY
E	.050 WAS.030	6-26-50	C.K.
D	4 PER SHIP FOR J3 WAS 2	4-30-46	C.E.V.
C	REDRAWN & REVISED	1-6-44	C.E.K.

MODEL	PER SHIP	NEXT ASSEMBLY	SUPERSEDES	SUP. BY
J3	4	16243	14053-2	
	4	13363,		
L-4A	4	13363,	14053-2	

PIPER AIRCRAFT CORP.
LOCK HAVEN, PENNA.

PART No.	No. REQ.	SIZE	DESCRIPTION / MATERIAL
		.050 x 3 3/4 x 5 3/8	PYRALIN

SCALE: FULL SIZE
TOTAL WT.-LBS.
FINISH

REINFORCEMENT—WING FABRIC

DRAWN	CHECKED	APPROVED
Keller 1-6-44	M.G.S. 1-11-44	

15761

200

A 200

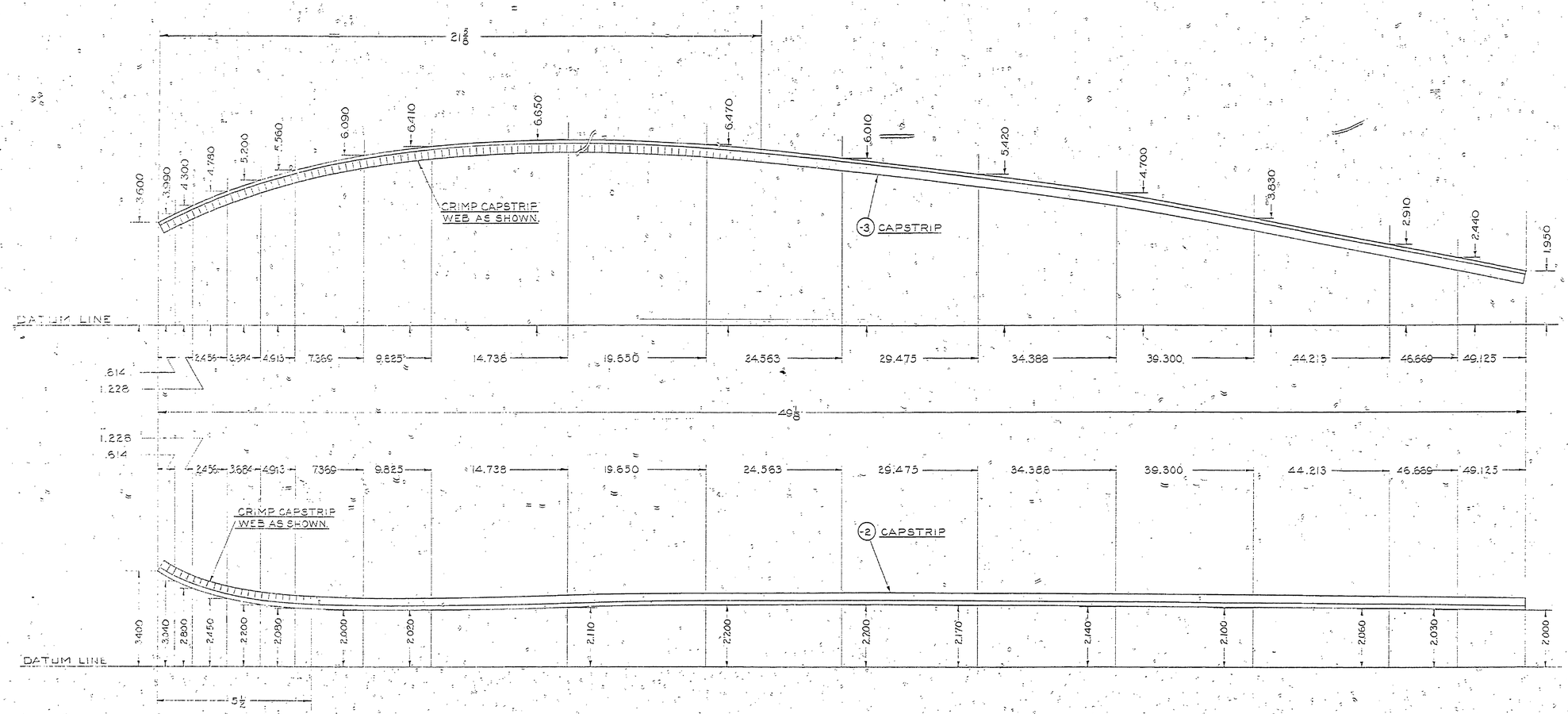

LIMITS, SHOP PRACTICES AND FINISH, UNLESS OTHERWISE NOTED, TO BE IN ACCORDANCE WITH PIPER SPECIFICATIONS #9 AND #36

84771	DWG REF.	RIB CAPSTRIP SECTION	
-3	—	50 LONG	PIPER SECTION 84771
-2	—	49 3/8 LONG	PIPER SECTION 84771
PART NO.	NO. REQ.	SIZE	DESCRIPTION
		MATERIAL	

SCALE: 6" = 1 FOOT

MODEL	PERSHIP	NEXT ASSEMBLY	SUPERSEDES	SUP. BY
L-14	2 EACH	10742		
J3	2 EACH	10742		
J5C	2 EACH	10742	11991-3	

CAPSTRIP – WING TIP RIB

LET.	REVISION	DATE	BY
A	L-14 MODEL REF. ADDED	6-14-45	J.B.M.

PIPER AIRCRAFT CORP.
LOCK HAVEN, PENNA.

DRAWN	CHECKED	APPROVED
R.E.T. 10-1-43	C.K. 11-2-43	

15844

880

A880

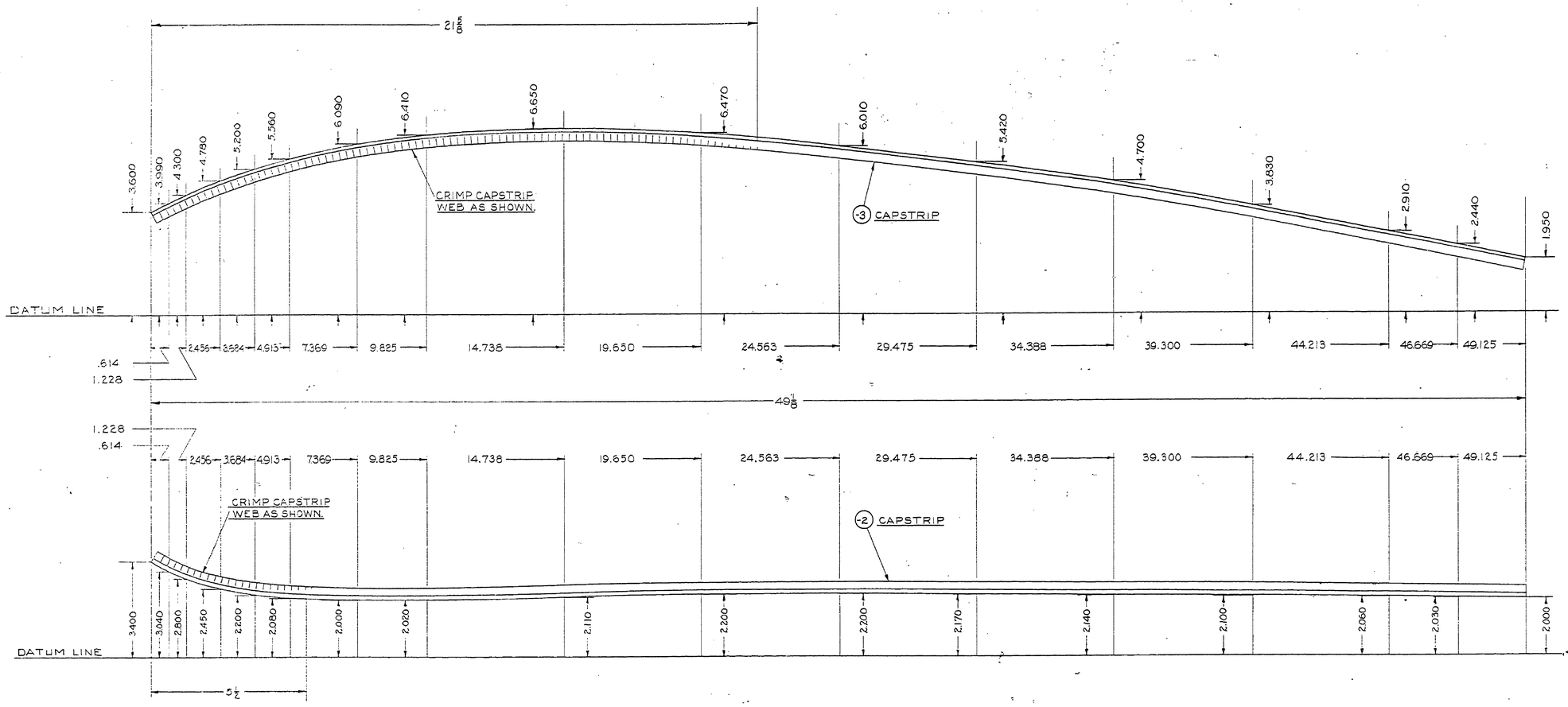

EMITS, SHOP PRACTICES ARE FINISH, UNLESS OTHERWISE NOTED, TO BE IN ACCORDANCE WITH PIPER SPECIFICATIONS 89 AND 936

PART NO.	NO. REQ.	SIZE	DESCRIPTION
84771	DWG REF ONLY	RIB CAPSTRIP SECTION	
-3	—	50 LONG	PIPER SECTION 84771
-2	—	49 3/8 LONG	PIPER SECTION 84771

SCALE: 6" = 1 FOOT

MODEL	PERSHIP	NEXT ASSEMBLY	SUPERSEDES	SUP. BY
L-14	2 EACH	10742		
J3	2 EACH	10742		
J5C	2 EACH	10742	11991-4	

LET	REVISION	DATE	BY
A	L-14 MODEL REF. ADDED	6-14-45	J.B.M.

PIPER AIRCRAFT CORP.
LOCK HAVEN, PENNA.

CAPSTRIP - WING TIP RIB

DRAWN	CHECKED	APPROVED
R.E.T. 10-1-43	C.K. 11-2-43	

15844

A880

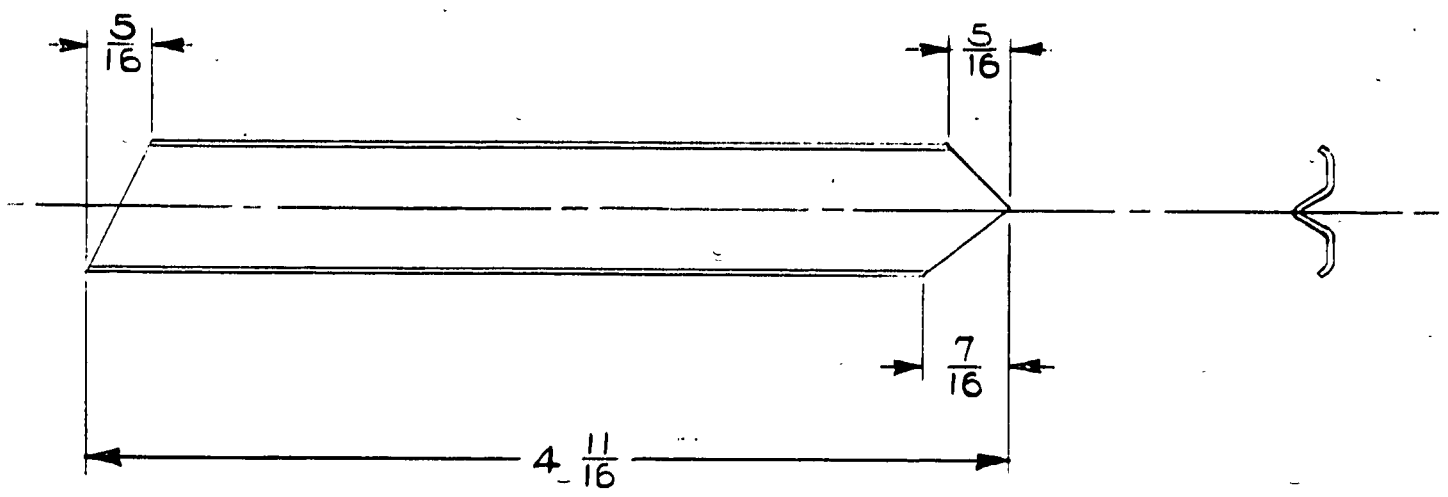

84761	DWG. REF. ONLY	RIB BRACE SECTION	
		4 11/16 L.	PIPER SECTION 84761
PART NO.	NO. REQ.	SIZE	DESCRIPTION
		MATERIAL	

SCALE FULL SIZE | TOTAL WT.—LBS.

FINISH—PIPER SPECIFICATION # 10

MANUFACTURING PRACTICES—PIPER SPECIFICATION # 9

MODEL	PER PLANE	NEXT ASSEMBLY	SUPERSEDES	SUP. BY
L-14	2	10742		
J3	2	10742		
J5C	2	10742	N582-14	

THIS DRAWING IS THE PROPERTY OF THE PIPER AIRCRAFT CORP. AND ITS POSSESSION BY UNAUTHORIZED PERSONS SHALL NOT BE CONSTRUED AS PERMISSION TO REPRODUCE FOR SALE IN WHOLE OR IN PART ANY DEVICES SHOWN THEREON.

BRACE-WING TIP RIB
#1 DIAGONAL

LET	REVISION	DATE	BY
B	REDRAWN WITHOUT CHANGE	6-13-51	I.E.M.
A	L-14 MODEL REF. ADDED	6-13-45	J.B.M.

PIPER AIRCRAFT CORP.
LOCK HAVEN, PENNA.

DRAFTSMAN	CHECKER	STANDARDS
R.E.T. 9-27-43	C.K. 11-2-43	

15851

201

A 201

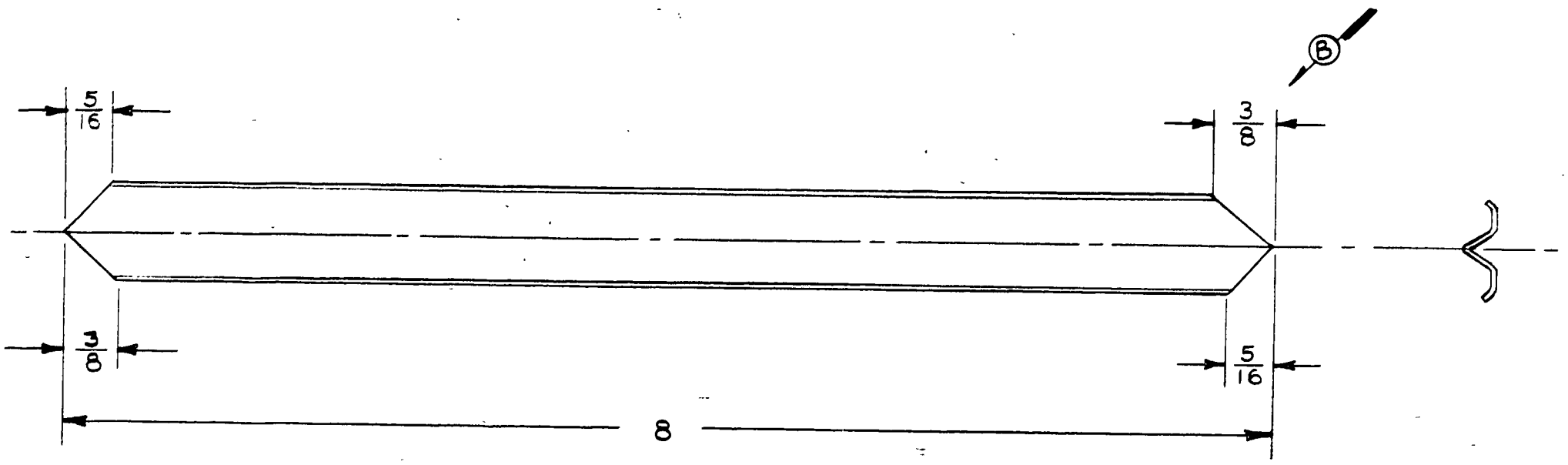

				L-14	2	10742			
				U3	2	10742			
				U5C	2	10742	N98215		
				MODEL	PER PLANE	NEXT ASSEMBLY	SUPERSEDES	SUP. BY	
C	REDRAWN WITHOUT CHANGE	6-13-51	I.M.M.						
B	3/8 DIM. WAS 13/32	5-22-46	C.E.V.						
A	L-14 MODEL REF. ADDED	6-13-45	J.B.M.						
LET	REVISION	DATE	BY						

THIS DRAWING IS THE PROPERTY OF THE PIPER AIRCRAFT CORP. AND ITS POSSESSION BY UNAUTHORIZED PERSONS SHALL NOT BE CONSTRUED AS PERMISSION TO REPRODUCE FOR SALE IN WHOLE OR IN PART ANY DEVICES SHOWN THEREON.

PIPER AIRCRAFT CORP.
LOCK HAVEN, PENNA.

84761	DWG. REF. ONLY	RIB BRACE SECTION	
		8 LONG	PIPER SECTION 84761
PART NO.	NO. REQ.	SIZE	DESCRIPTION
		MATERIAL	
SCALE FULL SIZE		TOTAL WT.—LBS.	
FINISH—PIPER SPECIFICATION # 10			
MANUFACTURING PRACTICES—PIPER SPECIFICATION # 9			

BRACE—WING TIP RIB
#2 DIAGONAL

R.E.T.	C.K.		15861
9-27-43	11-2-43		
DRAFTSMAN	CHECKER	STANDARDS	

202

A 202

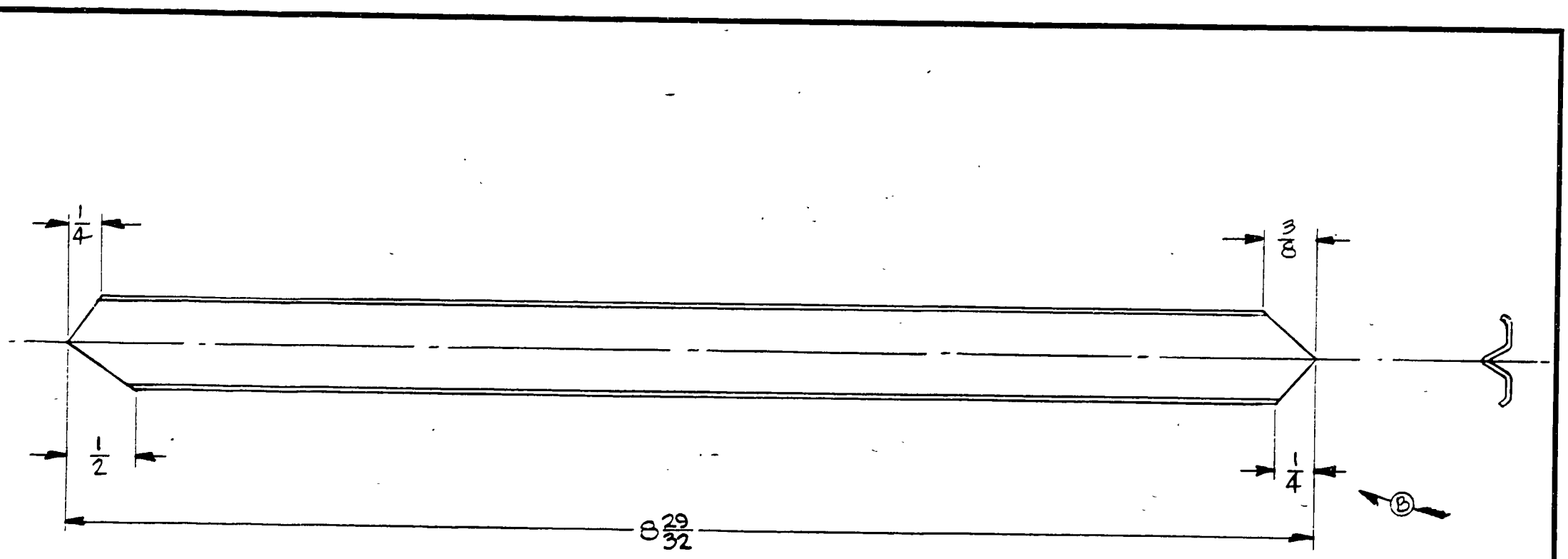

A

				MODEL	PER PLANE	NEXT ASSEMBLY	SUPERSEDES	SUP. BY
				L-14	2	10742		
				J3	2	10742		
				J5C	2	10742	11982-17	

THIS DRAWING IS THE PROPERTY OF THE PIPER AIRCRAFT CORP. AND ITS POSSESSION BY UNAUTHORIZED PERSONS SHALL NOT BE CONSTRUED AS PERMISSION TO REPRODUCE FOR SALE IN WHOLE OR IN PART ANY DEVICES SHOWN THEREON.

LET	REVISION	DATE	BY
C	REDRAWN WITHOUT CHANGE	6-13-51	M.G.
B	1/4 DIM. WAS 9/32	5-22-46	C.E.V.
A	L-14 MODEL REF ADDED	6-13-45	J.B.M.

PIPER AIRCRAFT CORP.
LOCK HAVEN. PENNA.

84761	DWG. REF. ONLY	RIB BRACE SECTION	
		8 29/32 LONG	PIPER SECTION 84761-2
PART NO.	NO. REQ.	SIZE	DESCRIPTION
		MATERIAL	
SCALE FULL SIZE		TOTAL WT.—LBS.	
FINISH—PIPER SPECIFICATION # 10			
MANUFACTURING PRACTICES—PIPER SPECIFICATION # 9			

BRACE – WING TIP RIB
#3 DIAGONAL

R.E.T.	C.H.		15871
9-28-43	11-2-43		
DRAFTSMAN	CHECKER	STANDARDS	

203

A 203

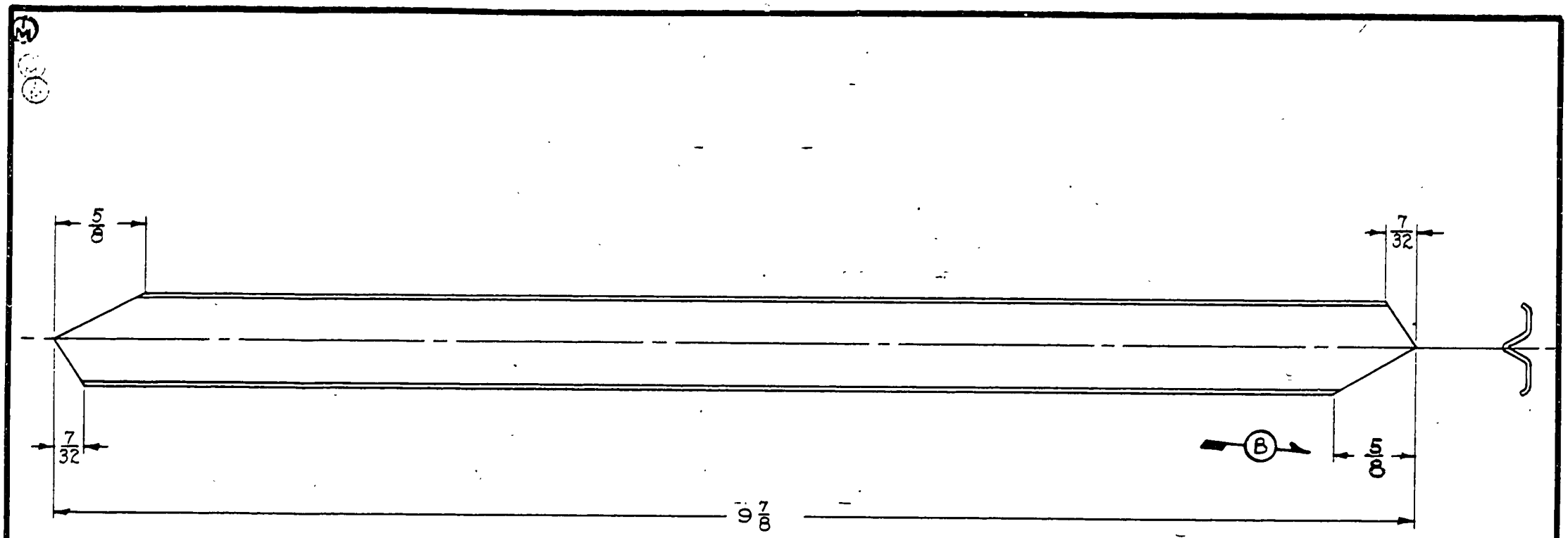

A

LIMITS, SHOP PRACTICES AND FINISH, UNLESS OTHERWISE NOTED, TO BE IN ACCORDANCE WITH PIPER SPECIFICATIONS #9 AND #10.

84761	DWG REF. ONLY	RIB BRACE SECTION
		9 7/8 LONG — PIPER SECTION 84761-2
PART No.	No. REQ.	SIZE — DESCRIPTION — MATERIAL

SCALE FULL SIZE

BRACE-WING TIP RIB
#4 DIAGONAL

MODEL	PER SHIP	NEXT ASSEMBLY	SUPERSEDES	SUPERSEDED BY
L-14	2	10742		
J3	2	10742		
J5C	2	10742	N982-19	

LET.	REVISION	DATE	SR.	BY
B	5/8 DIM. WAS 19/32	5-22-46		C.E.V.
A	L-14 MODEL REF. ADDED	6-13-45		J.B.M.

PIPER AIRCRAFT CORP.
LOCK HAVEN, PENNA.

DRAWN	CHECKED	APPROVED
R.E.T. 9-28-43	C.K. 11-2-43	

15881

NO. 180-M ALBANENE A. & B. SMITH CO., PGH., PA.

204

A 204

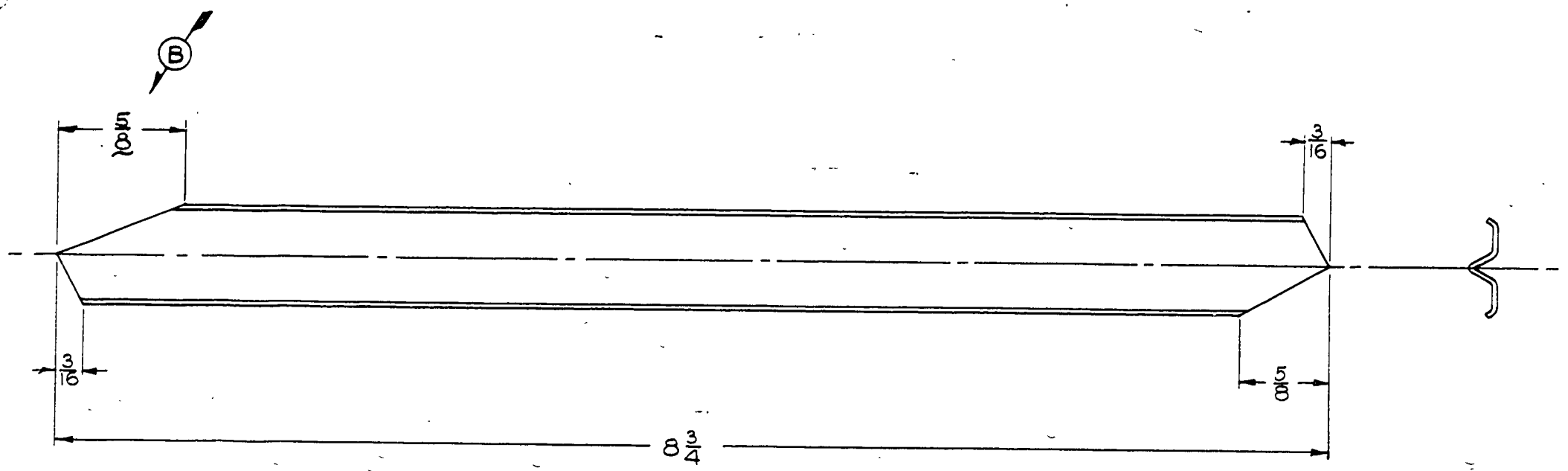

LIMITS. SHOP PRACTICES AND FINISH. UNLESS OTHERWISE NOTED. TO BE IN ACCORDANCE WITH PIPER SPECIFICATIONS #9 AND #10.

84761	DWG. REF. ONLY	RIB BRACE SECTION
		$8\frac{3}{4}$ LONG | PIPER SECTION 84761
PART No.	No. REQ.	SIZE | DESCRIPTION
		MATERIAL

SCALE FULL SIZE

BRACE-WING TIP RIB
#5 DIAGONAL

MODEL	PER SHIP	NEXT ASSEMBLY	SUPERSEDES	SUPERSEDED BY
L-14	2	10742		
J3	2	10742		
J5C	2	10742	N982-21	

LET.	REVISION	DATE	SR.	BY
B	5/8 DIM. WAS 7/8	5-22-46		C.E.V.
A	L-14 MODEL REF. ADDED	6-14-45		J.B.M.

PIPER AIRCRAFT CORP.
LOCK HAVEN, PENNA.

R.E.T.	C.K.	
9-28-43	11-2-43	
DRAWN	CHECKED	APPROVED

15891

NO. 199-M ALBANENE A. & B. SMITH CO., PGH., PA.

205

A 205

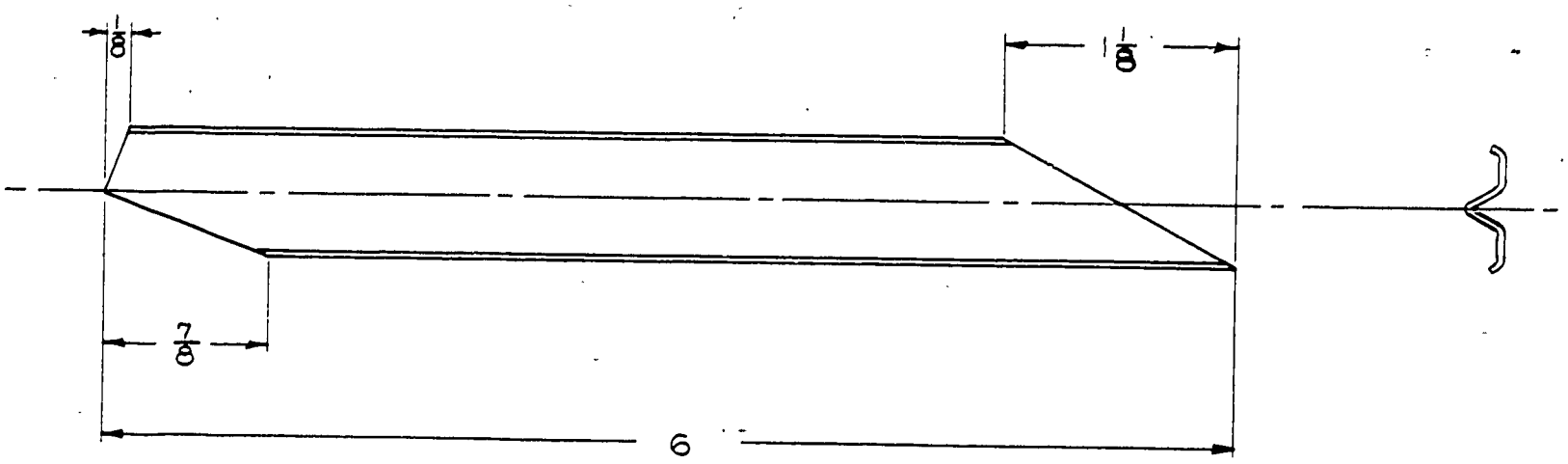

LIMITS, SHOP PRACTICES AND FINISH, UNLESS OTHERWISE NOTED, TO BE IN ACCORDANCE WITH PIPER SPECIFICATIONS #9 AND #10.

84761	DWG. REF. ONLY	RIB BRACE SECTION	
		6 LONG	PIPER SECTION 84761-2
PART No.	No. REQ.	SIZE	DESCRIPTION
		MATERIAL	

SCALE FULL SIZE

BRACE - WING TIP RIB
#6 DIAGONAL

MODEL	PER SHIP	NEXT ASSEMBLY	SUPERSEDES	SUPERSEDED BY
L-14	2	10742		
J3	2	10742		
J5C	2	10742	11982-22	

LET.	REVISION	DATE	SR.	BY
A	L-14 MODEL REF. ADDED	6-14-45		J.B.M.

PIPER AIRCRAFT CORP.
LOCK HAVEN, PENNA.

R.E.T.	C.K.		
9-28-43	11-2-43		15901
DRAWN	CHECKED	APPROVED	

NO. 195-M ALBANENE A. & B. SMITH CO., PGH., PA.

206

A 206

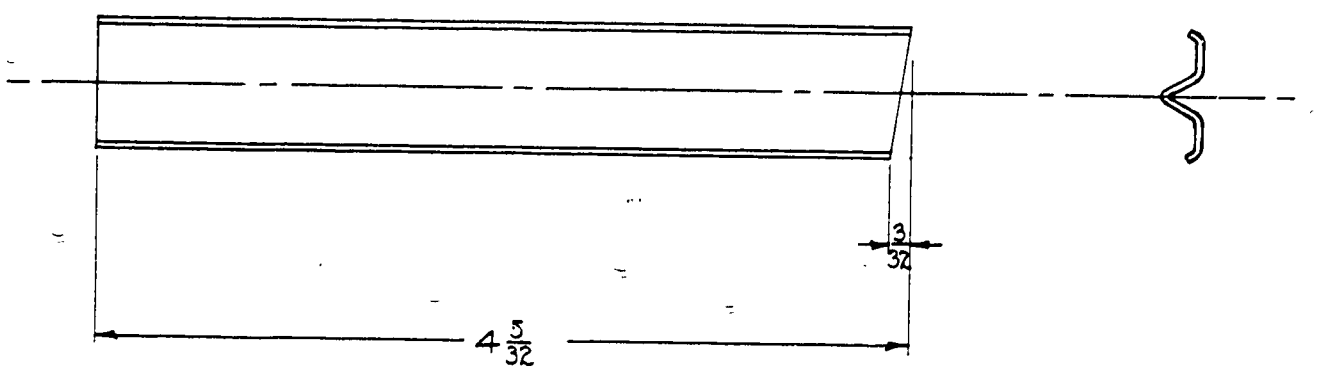

LIMITS. SHOP PRACTICES AND FINISH. UNLESS OTHERWISE NOTED. TO BE IN ACCORDANCE WITH PIPER SPECIFICATIONS #9 AND #10.

PART No.	No. REQ.	SIZE	MATERIAL
84761	DWG. REF. ONLY	RIB BRACE SECTION	
		4 5/32 LONG	PIPER SECTION 84761

SCALE FULL SIZE

BRACE-WING TIP RIB
#3 VERTICAL

MODEL	PER SHIP	NEXT ASSEMBLY	SUPERSEDES	SUPERSEDED BY
L-14	2	10742		
J3	2	10742		
J5C	2	10742	N982-20	

LET.	REVISION	DATE	SR.	BY
A	L-14 MODEL REF. ADDED	6-14-45		J.B.M.

PIPER AIRCRAFT CORP.
LOCK HAVEN, PENNA.

DRAWN	CHECKED	APPROVED
R.E.T. 9-28-43	C.K. 11-2-43	

15911

NO. 196-M ALSANENE A. & B. SMITH CO., PGH., PA.

207

A 207

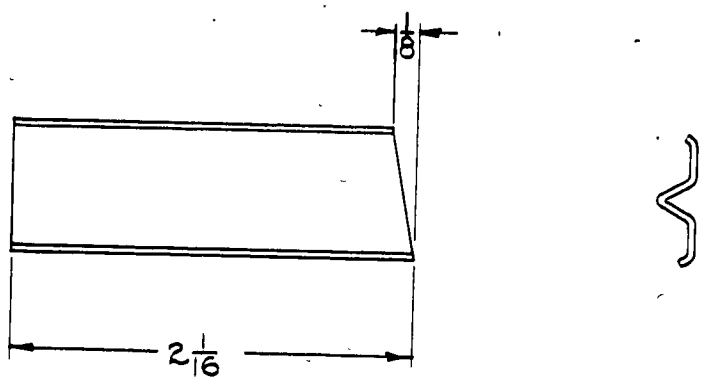

A

LIMITS. SHOP PRACTICES AND FINISH. UNLESS OTHERWISE NOTED. TO BE IN ACCORDANCE WITH PIPER SPECIFICATIONS #9 AND #10.

84761	DWG. REF. ONLY	RIB BRACE SECTION
		2 1/16 LONG — PIPER SECTION 84761-2
PART NO.	NO. REQ.	SIZE — DESCRIPTION
		MATERIAL

SCALE FULL SIZE

BRACE - WING TIP RIB #4 VERTICAL

MODEL	PER SHIP	NEXT ASSEMBLY	SUPERSEDES	SUPERSEDED BY
L-14	2	10742		
J3	2	10742		
J5C	2	10742	N982-23	

LET.	REVISION	DATE	SR.	BY
A	L-14 MODEL REF. ADDED	6-14-45		J.B.M.

PIPER AIRCRAFT CORP.
LOCK HAVEN, PENNA.

R.E.T.	C.K.	
9-28-43	11-2-43	
DRAWN	CHECKED	APPROVED

15921

208

NO. 100-M ALBANENE A. & B. SMITH CO., PGH., PA.

A 208

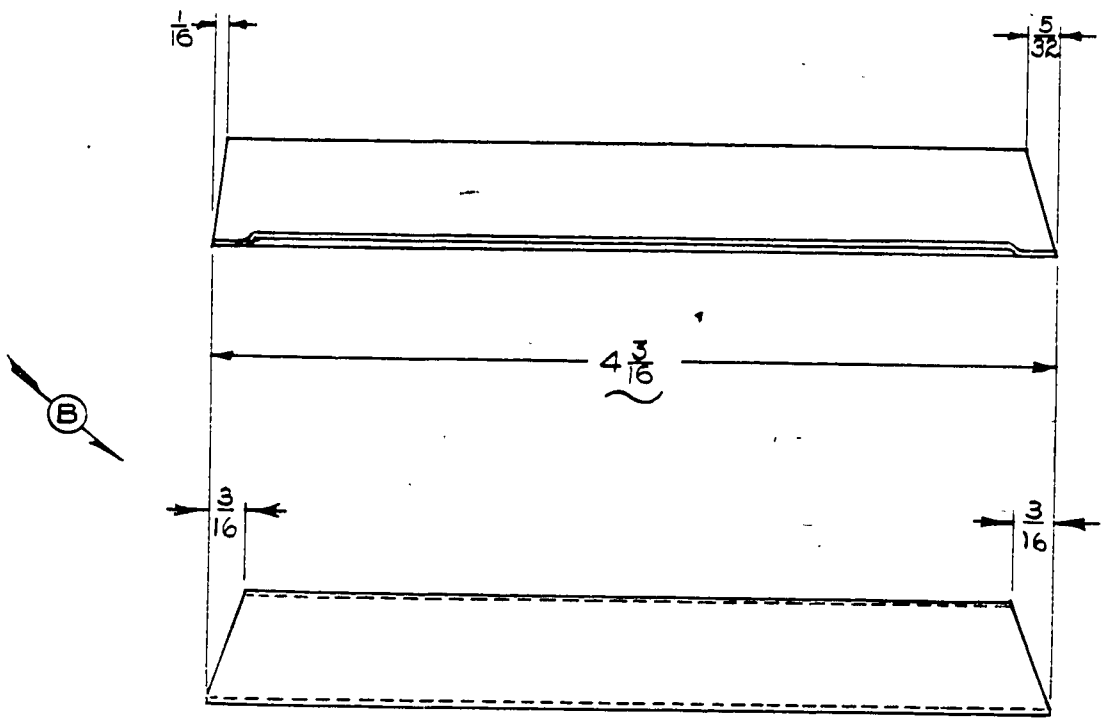

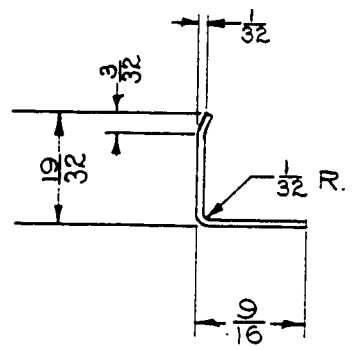

A

LIMITS, SHOP PRACTICES AND FINISH, UNLESS OTHERWISE NOTED, TO BE IN ACCORDANCE WITH PIPER SPECIFICATIONS #9 AND #10.

PART No.	No. REQ.	SIZE	DESCRIPTION MATERIAL
		.020 × 1 1/8 × 4 3/16	NICRAL OR 61S-T AL.

SCALE FULL SIZE

BRACE-WING TIP RIB
1 ANGLE

MODEL	PER SHIP	NEXT ASSEMBLY	SUPERSEDES	SUPERSEDED BY
L-14	2	10742		
J3	2	10742		
J5C	2	10742	12692-8	

LET.	REVISION	DATE	SR.	BY
B	3/16 DIM. WAS 45°	3-8-46		C.L.W.
A	L-14 MODEL REF. ADDED	6-14-45		J.B.M.

PIPER AIRCRAFT CORP.
LOCK HAVEN, PENNA.

DRAWN	CHECKED	APPROVED
R.E.T. 9-28-43	C.K. 11-2-43	

15931

NO. 196-M ALBANENE A. & B. SMITH CO., PGH., PA.

209

A 209

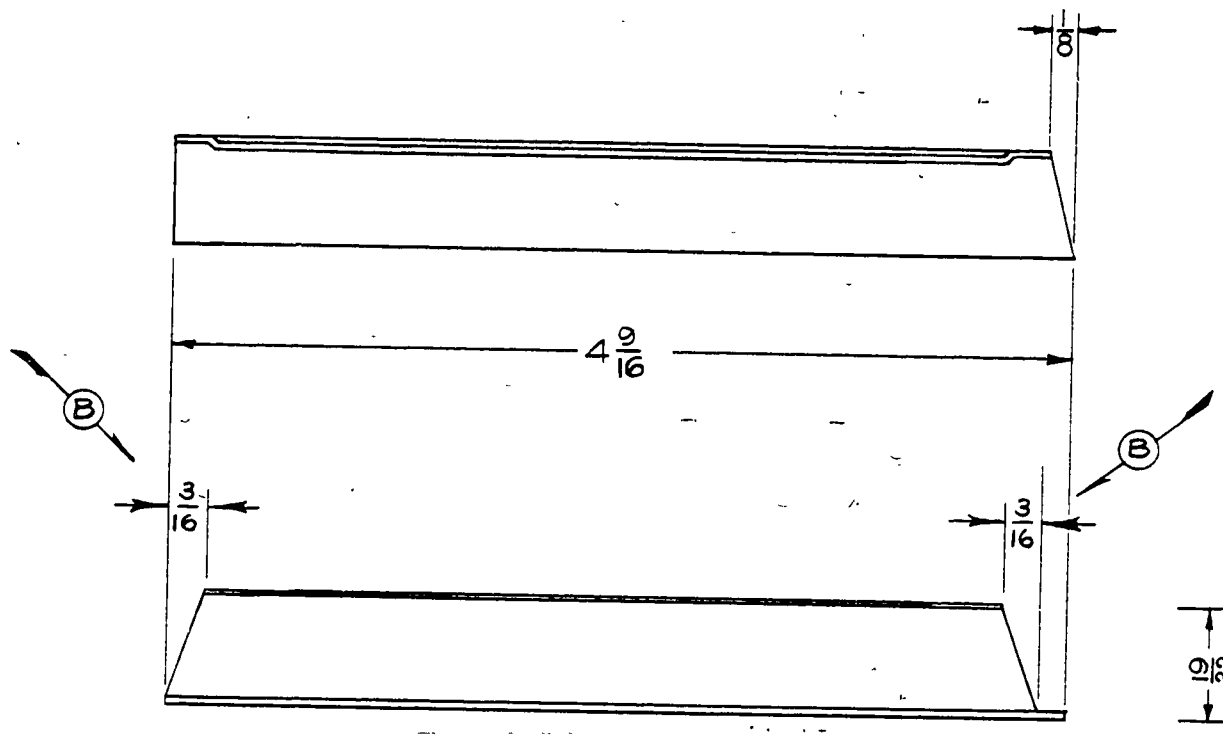

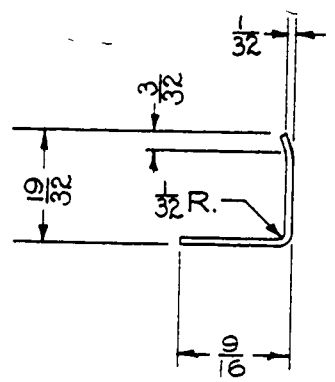

A

LIMITS. SHOP PRACTICES AND FINISH. UNLESS OTHERWISE NOTED, TO BE IN ACCORDANCE WITH PIPER SPECIFICATIONS #9 AND #10.

PART No.	No. REQ.	SIZE	MATERIAL
		.020 × 1⅛ × 4 9/16	NICRAL OR 61S-T AL.

SCALE FULL SIZE

BRACE - WING TIP RIB #2 ANGLE

MODEL	PER SHIP	NEXT ASSEMBLY	SUPERSEDES	SUPERSEDED BY
L-14	2	10742		
J3	2	10742		
J5C	2	10742	12698-9	

LET.	REVISION	DATE	SR.	BY
B	3/16 DIM. WAS 45°	3-8-46		C.L.W.
A	L-14 MODEL REF. ADDED	6-14-45		J.B.M.

PIPER AIRCRAFT CORP.
LOCK HAVEN, PENNA.

R.E.T.	C.K.		
9-28-43	11-2-43		
DRAWN	CHECKED	APPROVED	

15941

NO. 198-N ALBANENE A. & B. SMITH CO., PGH., PA.

210

A 210

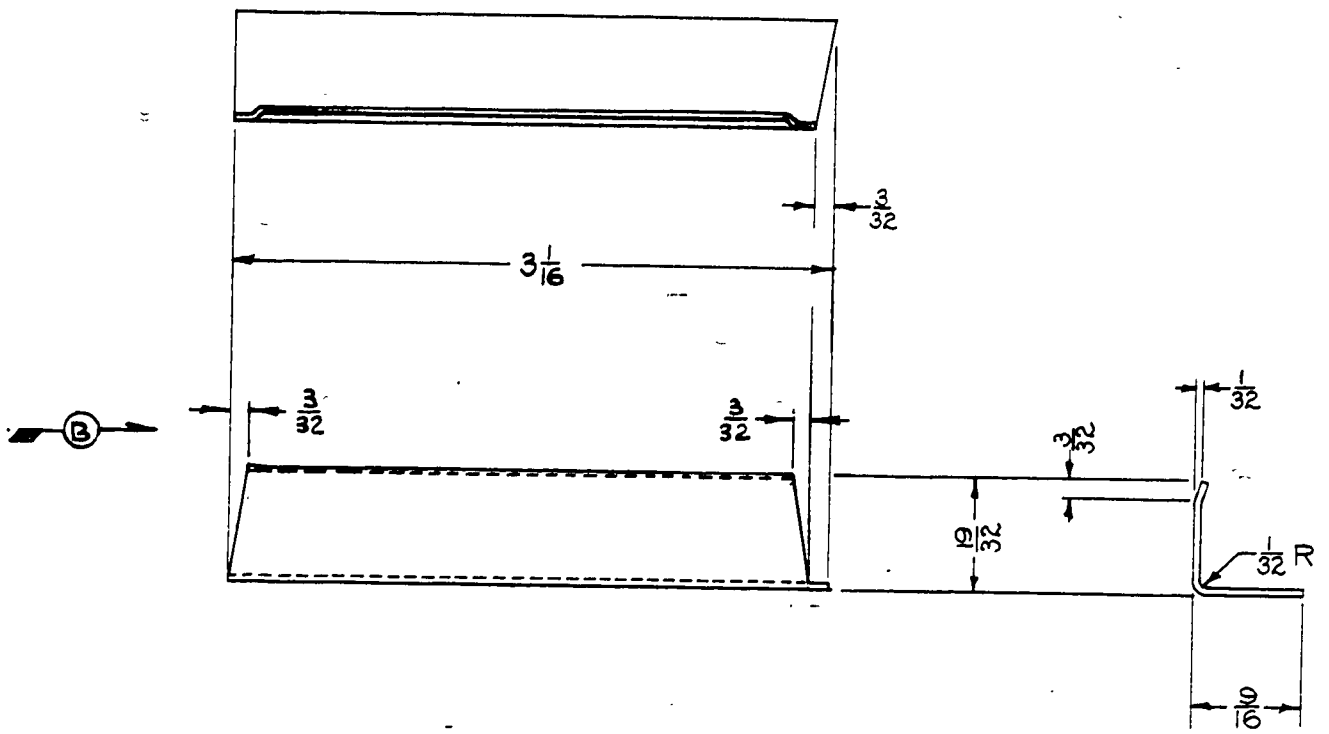

LIMITS, SHOP PRACTICES AND FINISH, UNLESS OTHERWISE NOTED, TO BE IN ACCORDANCE WITH PIPER SPECIFICATIONS #9 AND #10.

PART No.	No. REQ.	SIZE	MATERIAL
		.020×1⅛×3 1/16	NICRAL OR 61S-T AL.

SCALE FULL SIZE

BRACE - WING TIP RIB
3 ANGLE

MODEL	PER SHIP	NEXT ASSEMBLY	SUPERSEDES	SUPERSEDED BY
L-14	2	10742		
J5	2	10742		
J5C	2	10742	12692-10	

LET.	REVISION	DATE	SR.	BY
B	3/32 DIM. WERE 45°	3-4-46		L.R.
A	L-14 MODEL REF. ADDED	6-14-45		J.B.M.

PIPER AIRCRAFT CORP.
LOCK HAVEN, PENNA.

DRAWN	CHECKED	APPROVED
R.E.T. 9-29-43	C.K. 11-2-43	

15951

NO. 198-M ALBANENE A. & B. SMITH CO., PGH., PA.

211

A 211

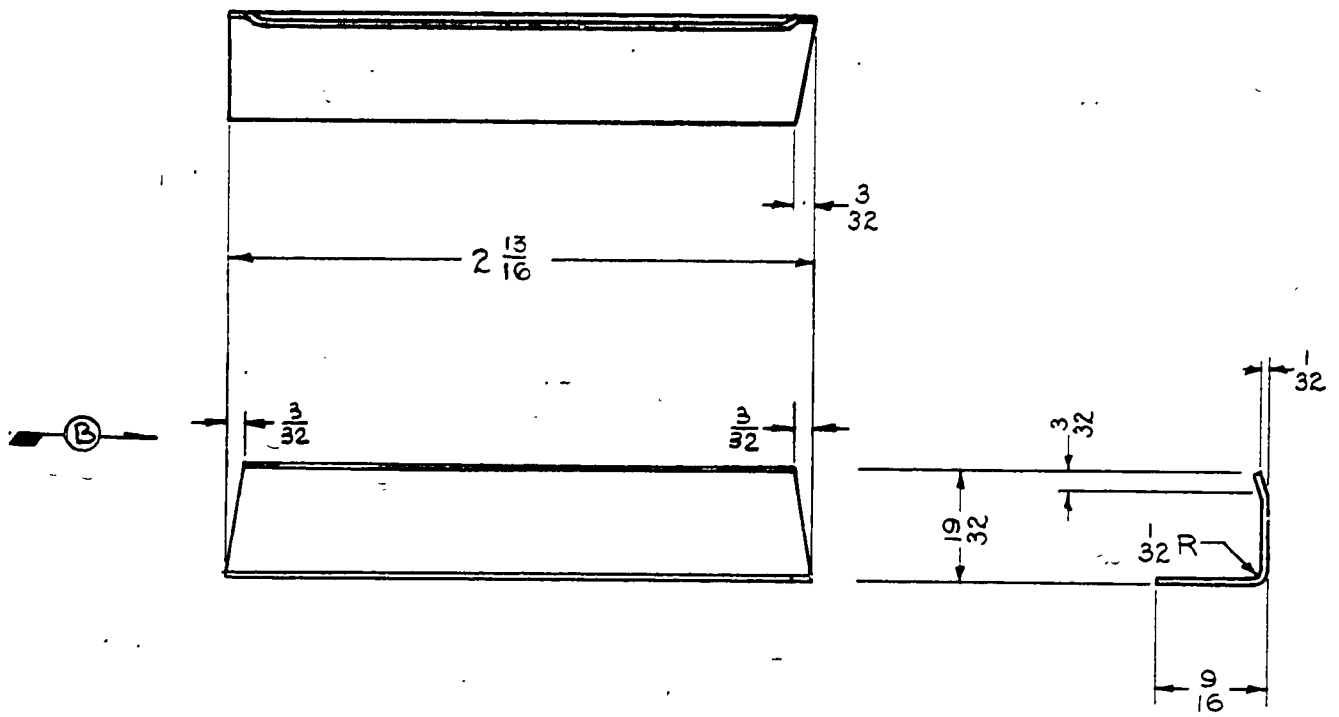

A

LIMITS. SHOP PRACTICES AND FINISH. UNLESS OTHERWISE NOTED. TO BE IN ACCORDANCE WITH PIPER SPECIFICATIONS #9 AND #10.

PART No.	No. REQ.	SIZE	DESCRIPTION / MATERIAL
			.020×1⅛×2 13/16 NICRAL OR 61S-T AL.

SCALE FULL SIZE

BRACE - WING TIP RIB
#4 ANGLE

MODEL	PER SHIP	NEXT ASSEMBLY	SUPERSEDES	SUPERSEDED BY
L-14	2	10742		
J3	2	10742		
J5C	2	10742	N2692-N	

LET.	REVISION	DATE	SR.	BY
B	3/32 DIM. WERE 45°	3-4-46		L.R.
A	L-14 MODEL REF. ADDED	6-14-45		J.B.M.

PIPER AIRCRAFT CORP.
LOCK HAVEN, PENNA.

DRAWN	CHECKED	APPROVED
R.E.T. 9-29-43	C.K. 11-2-43	

15961

NO. 195-M ALBANENE A. & B. SMITH CO., PGH., PA.

212

A 212

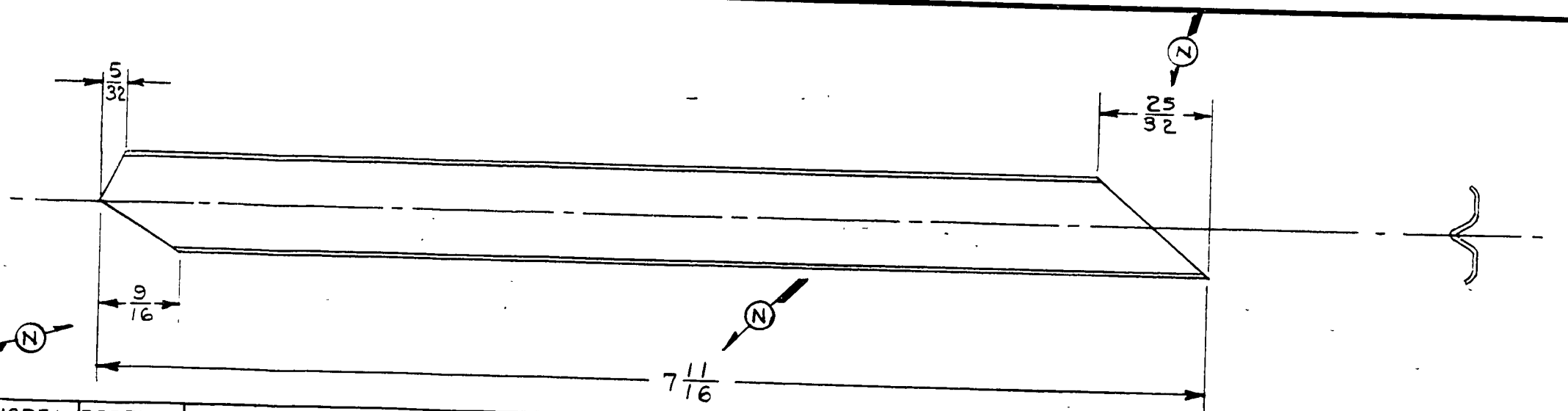

MODEL	PERPLANE	NEXT ASSEMBLY	WING ASSEMBLY
L-14	30	90450, 90451, 90453, 90452, 90462,	
		90463, 90465, 90468, 90478,	
		90518, 90466, 90528, 90519	
		90467, 90522, 90521, 90524, 90523	
J5C	30	10722, 10732, 13452, 10642, 10227, 10109	WOOD SPAR WING
	30	10602, 10632, 10702, 10712, 10108, 10119	METAL SPAR WING

LET	REVISION	DATE	BY
O	REDRAWN WITHOUT CHANGE	6-12-51	I.M.H.
N	9/16 WAS 11/16; 25/32 WAS 27/32 & 7 11/16 WAS 7 15/16	11-27-46	E.L.N
M	J5C N.A. 10227 WAS 10672	12-5-45	M.G.S
L	J5C N.A. 10108 WAS 10652	12-5-45	M.G.S
K	J5C WOOD SPAR REF. CAN.	11-30-45	DA.W.
J	J5C N.A. 10109 REM.	10-31-45	L.E.K.
H	J5C N.A. 10672 WAS 10227	10-31-45	L.E.K.
G	J5C N.A. 10652 WAS 10108	10-31-45	L.E.K
F	J5C N.A. 10227 WAS 10672	10-19-45	R.E.S
E	J5C N.A. 10108 WAS 10652	10-5-45	H.R.K
D	L-14 N.A. 90456 & 90517 REMOVED	7-3-45	J.B.M
C	L-14 MODEL REF. ADDED	3-21-45	H.M.Z
B	30 WAS 28 FOR METAL SPAR WING	6-19-44	V.P
A	J5C N.A. 10652 ADDED	6-19-44	V.P

MODEL	PER PLANE	NEXT ASSEMBLY	SUPERSEDES	SUP. BY
NOTED	NOTED	NOTED	10227	

THIS DRAWING IS THE PROPERTY OF THE PIPER AIRCRAFT CORP. AND ITS POSSESSION BY UNAUTHORIZED PERSONS SHALL NOT BE CONSTRUED AS PERMISSION TO REPRODUCE FOR SALE IN WHOLE OR IN PART ANY DEVICES SHOWN THEREON.

PIPER AIRCRAFT CORP.
LOCK HAVEN, PENNA.

84761	DWG REF. ONLY	RIB BRACE SECTION
		7 11/16 LONG | PIPER SECTION 84761-2
PART NO.	NO. REQ.	SIZE | DESCRIPTION
		MATERIAL

SCALE FULL SIZE | TOTAL WT.—LBS.

FINISH—PIPER SPECIFICATION # 10

MANUFACTURING PRACTICES—PIPER SPECIFICATION # 9

BRACE — WING RIB
#5 DIAGONAL

R.E.T.	C.K.		15991
5-17-43	11-23-43		
DRAFTSMAN	CHECKER	STANDARDS	

D DJ

213

A 213

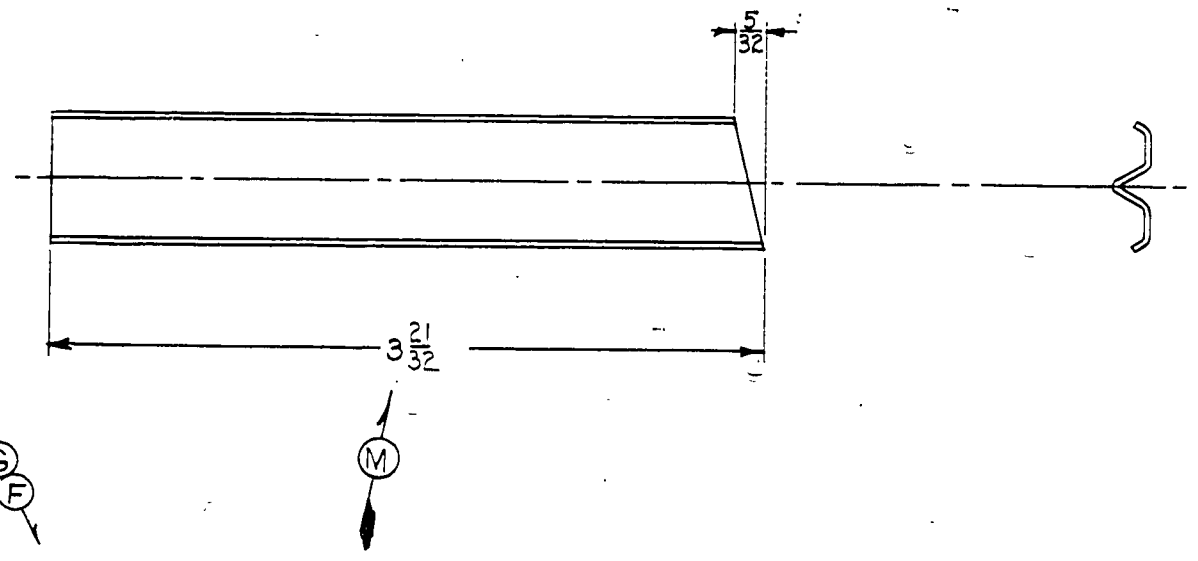

MODEL	PER SHIP	NEXT ASSEMBLY	WING ASSEMBLY
J5C	~~30~~	13452,10642,10227,10682,10692	~~WOOD SPAR WING~~
	30	10702,10712,10722,10732,10108,10109,10119	METAL SPAR WING
L-14	2	90453, 90452	

J E D C

B A

LET.	REVISION	DATE	SR.	BY
M	3 21/32 WAS 3 1/2	11-27-46		E.L.N.
L	J5C N.A. 10227 WAS 10672	12-4-45		M.G.S.
K	J5C N.A. 10108 WAS 10652	12-4-45		M.G.S.
J	J5C WOOD SPAR REF. CANCELED	11-29-45		I.D.B.
H	J5C N.A. 10109 REM.	10-31-45		L.E.K.
G	J5C N.A. 10672 WAS 10227	10-31-45		LEK
F	J5C N.A. 10652 WAS 10108	10-31-45		LEK
E	J5C N.A. 10227 WAS 10672	10-19-45		R.E.S.
D	J5C N.A. 10108 WAS 10652	10-5-45		H.R.K.
C	L-14 MODEL REF. ADDED	3-21-45		H.M.Z.
B	30 WAS 28 FOR METAL SPAR WING	6-19-44		V.P.
A	J5C N.A. 10652 ADDED	6-19-44		V.P.

LIMITS, SHOP PRACTICES AND FINISH, UNLESS OTHERWISE NOTED, TO BE IN ACCORDANCE WITH PIPER SPECIFICATIONS #9 AND #10.

MODEL	PER SHIP	NEXT ASSEMBLY	SUPERSEDES	SUPERSEDED BY
NOTED	NOTED	NOTED	11982-8	

PIPER AIRCRAFT CORP.
LOCK HAVEN, PENNA.

PART No.	No. REQ.	MATERIAL
84761	DWG. REF. ONLY	RIB BRACE SECTION
		3 21/32 LONG — PIPER SECTION 84761-2
		SIZE — DESCRIPTION

SCALE FULL SIZE

BRACE - WING RIB
#4 VERTICAL

DRAWN	CHECKED	APPROVED
R.E.T. 9-17-43	C.K. 11-23-43	

16011

NO. 199-M ALBANENE A. & B. SMITH CO., PHILA., PA.

214

A 214

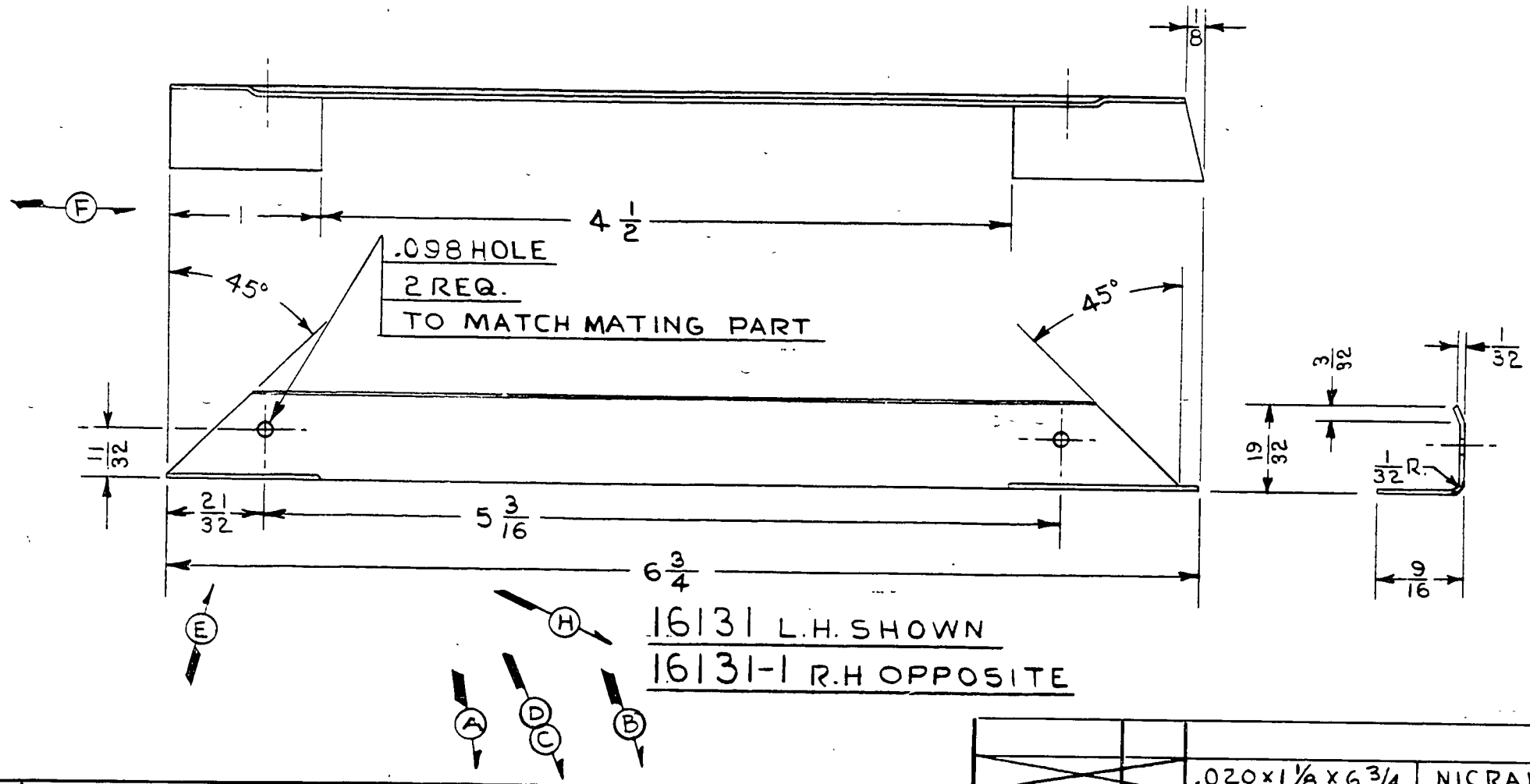

16131 L.H. SHOWN

16131-1 R.H OPPOSITE

LET	REVISION	DATE	BY
J	REDRAWN WITHOUT CHANGE	6-15-51	I.M.M
H	-1 ADDED	12-8-49	K.D.D.
G	1½ ℄ RELIEF HOLE REM.	3-8-46	C.L.W
F	1 WAS 7/8; 4½ ℄ J3 REF. ADDED	3-8-46	C.L.W
E	HOLES ADDED (.098)	1-23-46	H.M.Z
D	J5C N.A. 10227 WAS 10672	12-4-45	L.E.K
C	J5C N.A. 10672 WAS 10227	10-31-45	L.E.K
B	J5C N.A. 10227 WAS 10672	10-19-45	R.E.S
A	L-14 MODEL REF. ADDED	3-22-45	H.M.Z

MODEL	PER PLANE	NEXT ASSEMBLY	SUPERSEDES	SUP. BY
J3	4	13022, 13052		
L-14	4	90524, 90523		
		90450, 90451		
J5C	4	10227, 10722	12692-5	

THIS DRAWING IS THE PROPERTY OF THE PIPER AIRCRAFT CORP. AND ITS POSSESSION BY UNAUTHORIZED PERSONS SHALL NOT BE CONSTRUED AS PERMISSION TO REPRODUCE FOR SALE IN WHOLE OR IN PART ANY DEVICES SHOWN THEREON.

PIPER AIRCRAFT CORP.
LOCK HAVEN, PENNA.

PART NO.	NO. REQ.	SIZE	DESCRIPTION
		.020 x 1⅛ x 6¾	NICRAL OR 61S-T AL
		MATERIAL	

SCALE FULL SIZE | TOTAL WT.—LBS.

FINISH—PIPER SPECIFICATION # 10

MANUFACTURING PRACTICES—PIPER SPECIFICATION # 9

BRACE - WING RIB ANGLE (SPECIAL)

R.E.T.	C.K.		
9-22-43	11-20-43		**16131**
DRAFTSMAN	CHECKER	STANDARDS	

A 215

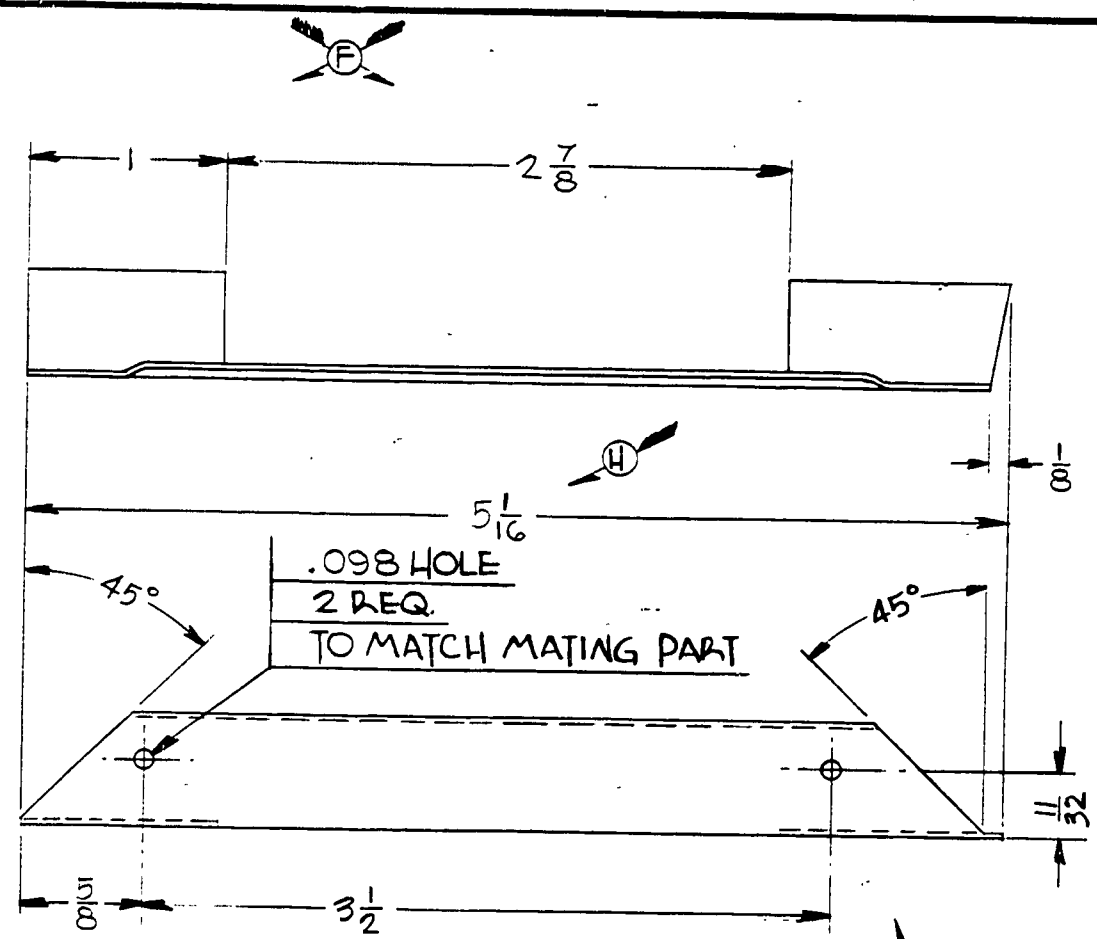

16141 L.H. SHOWN
16141-1 R.H. OPPOSITE

LET	REVISION	DATE	BY	MODEL	PER PLANE	NEXT ASSEMBLY	SUPERSEDES	SUP. BY
K	REDRAWN WITHOUT CHANGE	6-15-51	M.G.	J3	4	13022, 13052		
J	-1 ADDED	12-9-49	K.D.D.					
H	5 1/16 DIM. WAS 5	5-22-46	C.E.V.	L-14	4	90524, 90523		
G	1/8 DIM & RELIEF HOLE REM.	3-8-46	C.L.W.			90450, 90451		
F	1 WAS 7/8, 2 7/8 & J3 REF. ADDED	3-8-46	C.L.W.	J5C	4	10227, 10722	12692-6	
E	HOLES ADDED (.098)	1-24-46	M.Z.					
D	J5C AN A 10227 WAS 10672	12-4-45	L.E.R.					
C	J5C AN A 10672 WAS 10227	10-31-45	L.E.R.					
B	J5C AN A 10227 WAS 10672	10-19-45	R.E.S.					
A	L-14 MODEL REF. ADDED	3-22-45	M.Z.					

THIS DRAWING IS THE PROPERTY OF THE PIPER AIRCRAFT CORP. AND ITS POSSESSION BY UNAUTHORIZED PERSONS SHALL NOT BE CONSTRUED AS PERMISSION TO REPRODUCE FOR SALE IN WHOLE OR IN PART ANY DEVICES SHOWN THEREON.

PIPER AIRCRAFT CORP.
LOCK HAVEN, PENNA.

PART NO.	NO. REQ.	SIZE	MATERIAL
		.020 × 1 1/8 × 5 1/16	NICRAL OR GIS-TAL.

SCALE FULL SIZE | TOTAL WT.—LBS.

FINISH—PIPER SPECIFICATION # 10

MANUFACTURING PRACTICES—PIPER SPECIFICATION # 9

BRACE-WING RIB ANGLE (SPECIAL)

DRAFTSMAN	CHECKER	STANDARDS
R.E.T. 9-23-43	C.K. 11-22-43	

16141

216

A 216

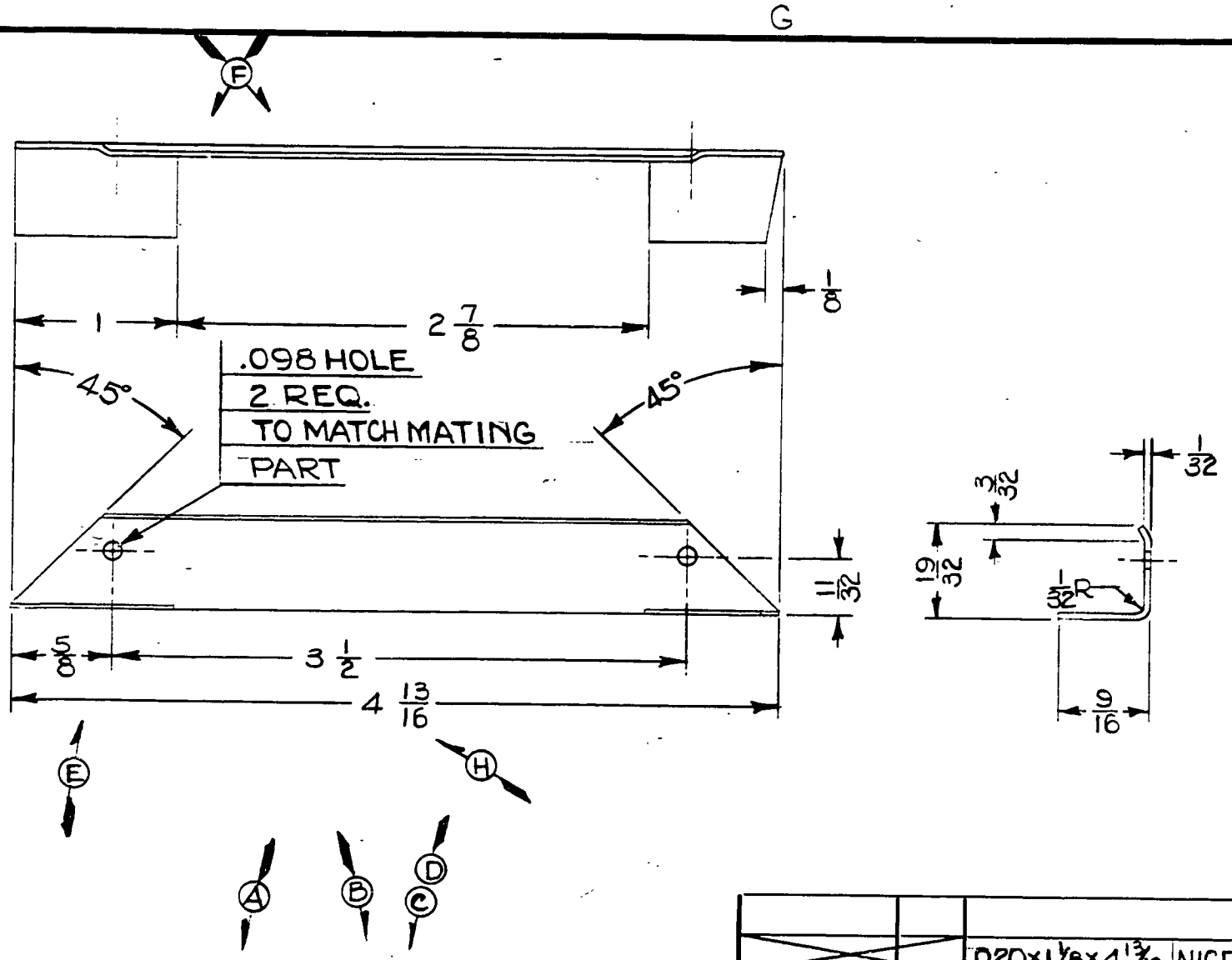

LET	REVISION	DATE	BY
J	REDRAWN WITHOUT CHANGE	6-15-51	I.E.M.
H	4 13/16 D.I.M. WAS 4 11/16	5-22-46	C.E.V.
G	I. DIM. & RELIEF HOLE REM.	3-8-46	C.L.W.
F	I. WAS 7/8; 2 1/8 & J3 REF. ADDED	3-8-46	C.L.W.
E	HOLES ADDED (.098)	1-24-46	H.M.Z.
D	J5C N.A. 10227 WAS 10672	12-4-45	L.E.K.
C	J5C N.A. 10672 WAS 10227	10-31-45	L.E.K.
B	J5C N.A. 10227 WAS 10672	10-19-45	R.E.S.
A	L-14 MODEL REF. ADDED	8-22-45	H.M.Z.

MODEL	PER PLANE	NEXT ASSEMBLY	SUPERSEDES	SUP. BY
J3	4	13022, 13052		
L-14	4	90524, 90583		
J5C	4	10227, 10722	18692-9	

THIS DRAWING IS THE PROPERTY OF THE PIPER AIRCRAFT CORP. AND ITS POSSESSION BY UNAUTHORIZED PERSONS SHALL NOT BE CONSTRUED AS PERMISSION TO REPRODUCE FOR SALE IN WHOLE OR IN PART ANY DEVICES SHOWN THEREON.

PIPER AIRCRAFT CORP.
LOCK HAVEN, PENNA.

PART NO.	NO. REQ.	SIZE	DESCRIPTION / MATERIAL
		.020 × 1 1/8 × 4 13/16	NICRALOR 61S-T ALUM.

SCALE FULL SIZE — TOTAL WT.—LBS.
FINISH—PIPER SPECIFICATION # 10
MANUFACTURING PRACTICES—PIPER SPECIFICATION # 9

BRACE—WING RIB ANGLE (SPECIAL)

DRAFTSMAN	CHECKER	STANDARDS
R.E.T. 9-22-43	C.K. 11-22-43	

16151

217

A217

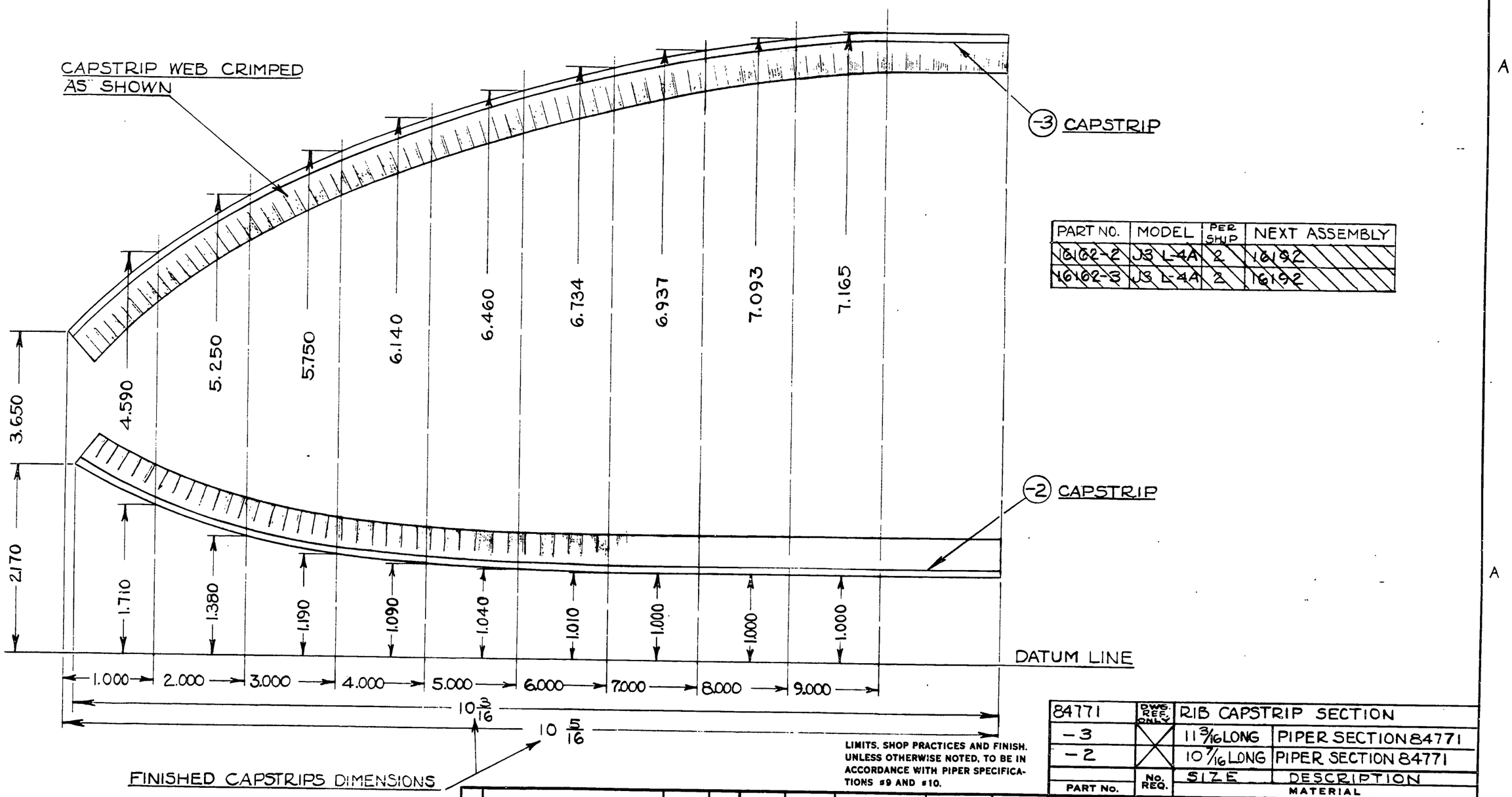

PART NO.	MODEL	PER SHIP	NEXT ASSEMBLY
16162-2	J3 L-4A	2	16192
16162-3	J3 L-4A	2	16192

LIMITS, SHOP PRACTICES AND FINISH, UNLESS OTHERWISE NOTED, TO BE IN ACCORDANCE WITH PIPER SPECIFICATIONS #9 AND #10.

LET.	REVISION	DATE	BY
A	NOTCHES, 1/4 & 1/8 DIMS. REM.	2-7-96	CEV.

MODEL	PER SHIP	NEXT ASSEMBLY	SUPERSEDES	SUP. BY
NOTED	NOTED	NOTED		

PIPER AIRCRAFT CORP.
LOCK HAVEN, PENNA.

84771	DWG. REF. ONLY	RIB CAPSTRIP SECTION	
-3	X	11 3/16 LONG	PIPER SECTION 84771
-2	X	10 5/16 LONG	PIPER SECTION 84771
PART NO.	NO. REQ.	SIZE	DESCRIPTION MATERIAL

SCALE FULL SIZE | TOTAL WT.-LBS.
FINISH

CAPSTRIP—WING TIP NOSE RIB

DRAWN	CHECKED	APPROVED
P. FRANK 10-16-43	C.K. 10-21-43	

16162

FOR METAL SPAR WING

609

A609

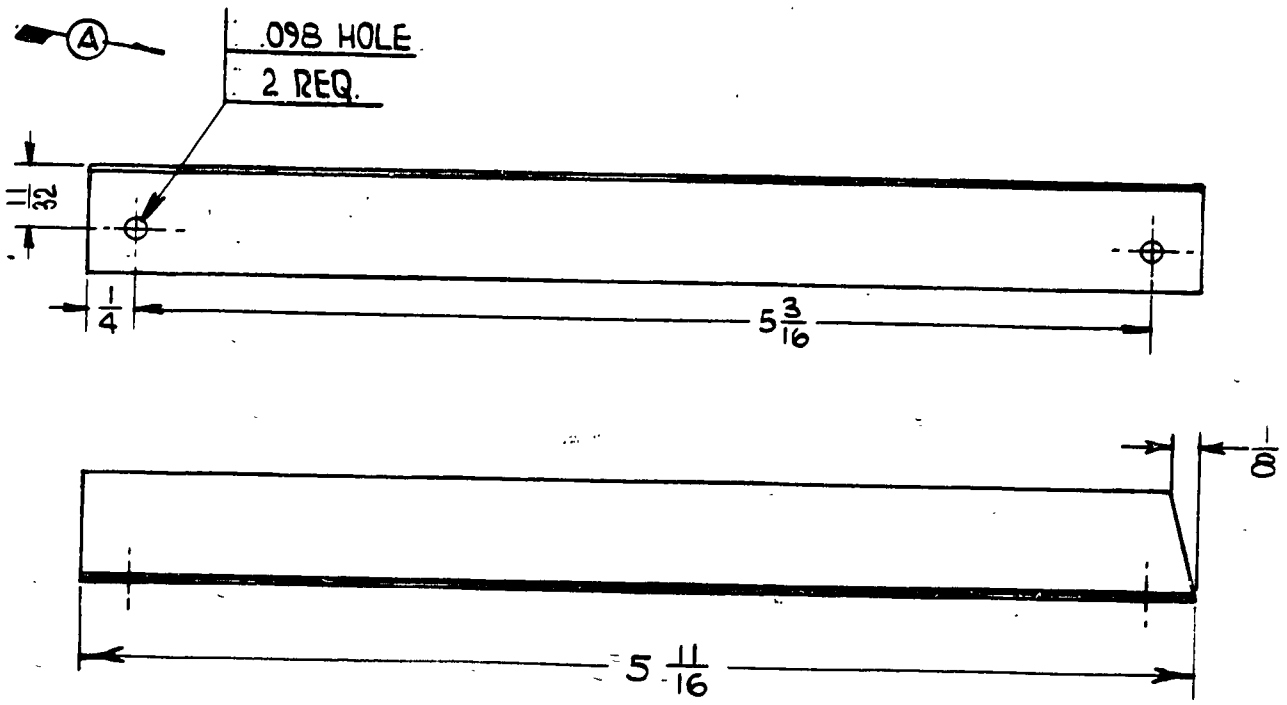

LIMITS, SHOP PRACTICES AND FINISH. UNLESS OTHERWISE NOTED, TO BE IN ACCORDANCE WITH PIPER SPECIFICATIONS #9 AND #10.

PART No.	No. REQ.	SIZE	DESCRIPTION / MATERIAL
		.020×1 1/8×5 11/16	NICRAL OR 61S-T ALUM.

SCALE FULL SIZE — TOTAL WT.- LBS.

FINISH

BRACE—WING TIP NOSE RIB ANGLE

MODEL	PER SHIP	NEXT ASSEMBLY	SUPERSEDES	SUP. BY
L-4A	2	16198		
J3	2	16198		

LET.	REVISION	DATE	BY
A	.098 HOLES ADDED	3-4-46	L.R.

PIPER AIRCRAFT CORP.
LOCK HAVEN, PENNA.

DRAWN	CHECKED	APPROVED
R. FRANK 10-18-43	C.K. 10-21-43	

16171

FOR METAL SPAR WING 16171 A218

A218

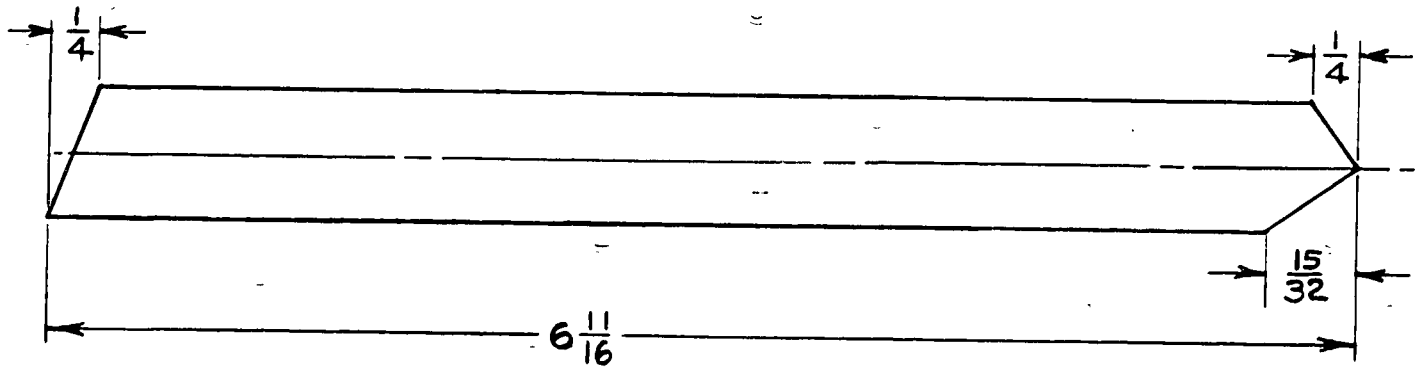

LIMITS, SHOP PRACTICES AND FINISH. UNLESS OTHERWISE NOTED, TO BE IN ACCORDANCE WITH PIPER SPECIFICATIONS #9 AND #10.

PART No.	No. REQ.	SIZE	DESCRIPTION / MATERIAL
84761	DWG. REF. ONLY		RIB BRACE SECTION
		6 11/16 LONG	PIPER SECTION 84761-2

SCALE FULL SIZE — TOTAL WT.- LBS.

FINISH

BRACE - WING TIP NOSE RIB DIAGONAL

MODEL	PER SHIP	NEXT ASSEMBLY	SUPERSEDES	SUP. BY
L-4A	2	16192		
J3	2	16192		

LET.	REVISION	DATE	BY

PIPER AIRCRAFT CORP.
LOCK HAVEN, PENNA.

DRAWN	CHECKED	APPROVED
R.F.FRANK 10-18-43	C.K. 10-21-43	

16181

FOR METAL SPAR WING I19

A219

This page intentionally left blank.

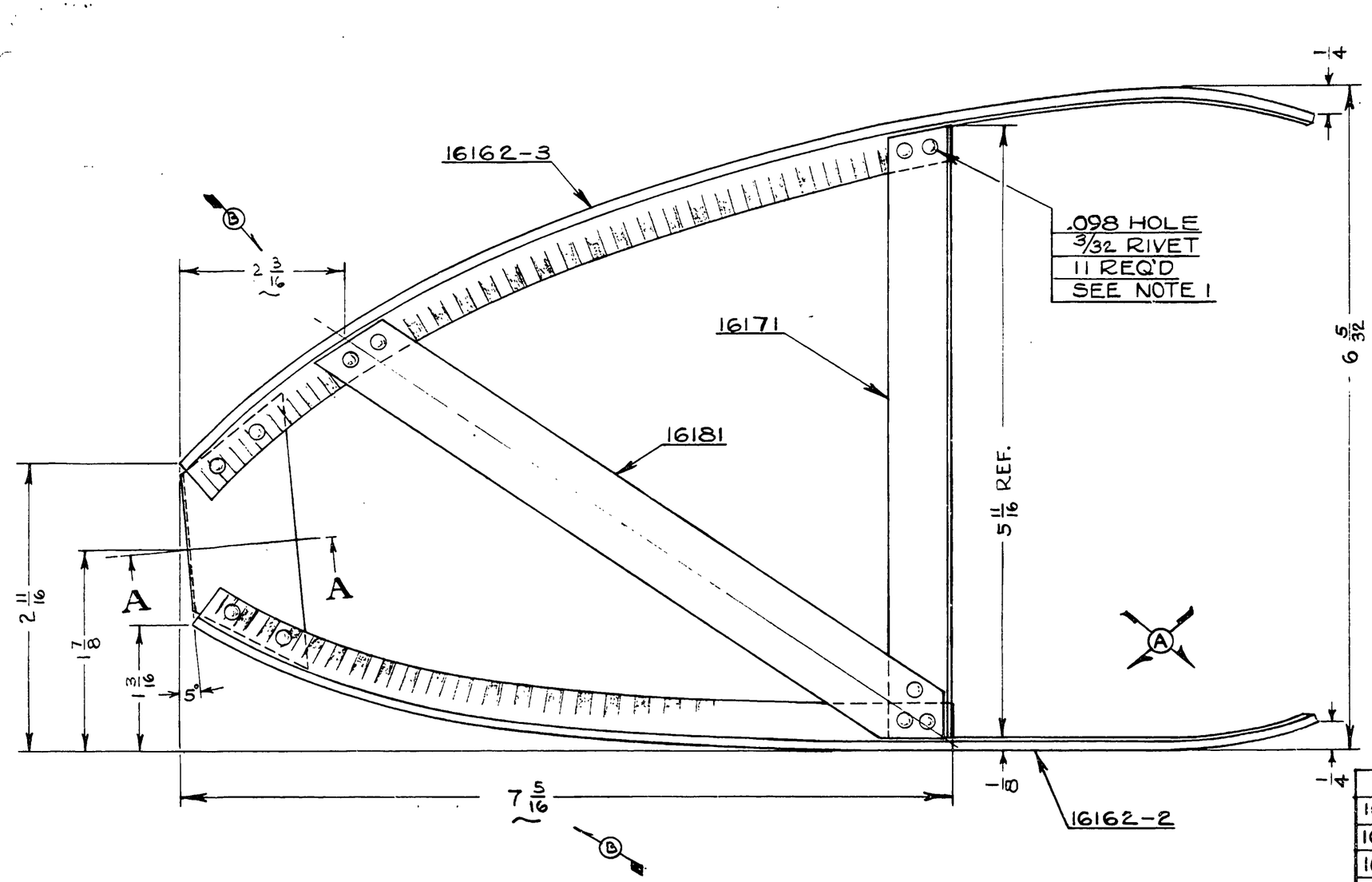

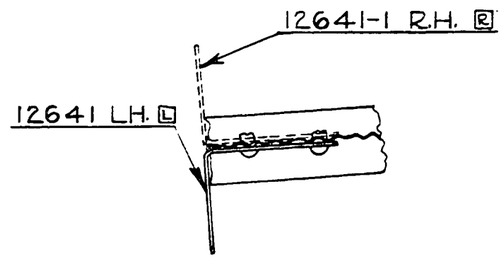

SECTION A-A

NOTE:

1. MIN. DISTANCE FROM CENTER OF RIVETS TO END OR EDGE OF MAT'L TO BE 1/8

16192 L.H. SHOWN
16192-1 R.H. ASSEMBLED OPPOSITELY AS SHOWN DOTTED IN SECTION "A-A"

PARTS MARKED L USED ON LEFT ASS'Y
PARTS MARKED R USED ON RIGHT ASS'Y

LIMITS, SHOP PRACTICES AND FINISH. UNLESS OTHERWISE NOTED, TO BE IN ACCORDANCE WITH PIPER SPECIFICATIONS #9 AND #10.

PART No.	No. REQ.	SIZE / DESCRIPTION / MATERIAL
	11	3/32 x 9/64 LONG TUBULAR CADMIUM PLATED STEEL RIVET
16181	1	DIAGONAL BRACE
16171	1	ANGLE BRACE
16162-3	1	CAPSTRIPS
16162-2	1	
12641-1	1	GUSSET
12641	1	

SCALE FULL SIZE — TOTAL WT.-LBS.
FINISH

RIB ASS'Y—WING TIP NOSE

MODEL	PER SHIP	NEXT ASSEMBLY	SUPERSEDES	SUP. BY
L-4A	2	15556		
J3	2	15556		

LET.	REVISION	DATE	BY
B	2 3/16 WAS 1 1/2; 7 5/16 WAS 7	3-4-46	L.R.
A	1/8 & 1/4 ADDED	2-7-46	BC

PIPER AIRCRAFT CORP.
LOCK HAVEN, PENNA.

DRAWN	CHECKED	APPROVED
R. FRANK 10-19-43	C.K. 10-21-43	

16192

FOR METAL SPAR WING

610

A610

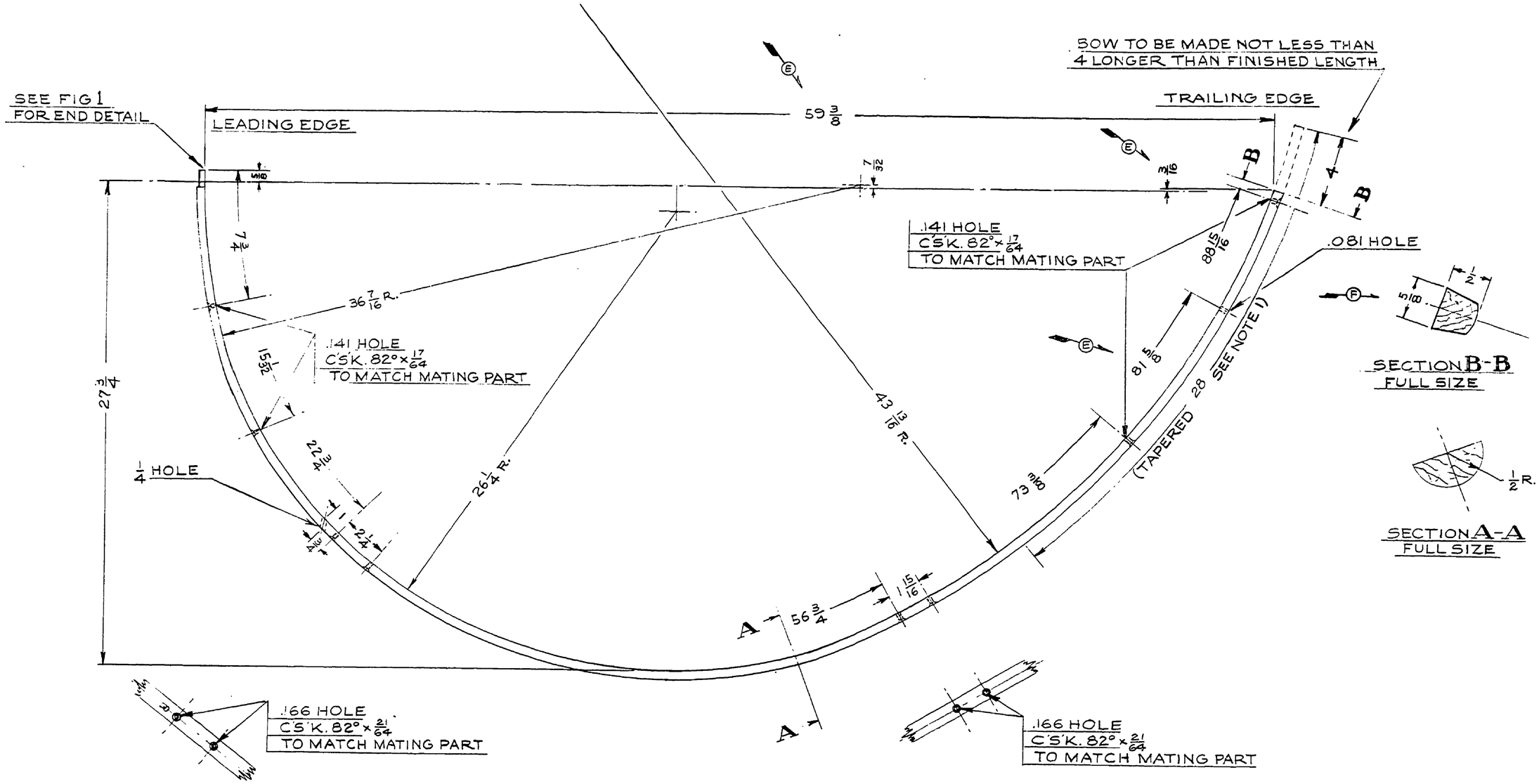

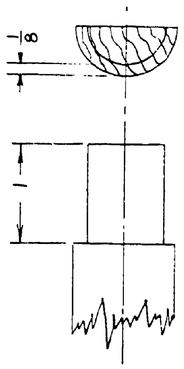

FIG. 1
FULL SIZE

NOTE:
1. TAPER ON TOP AND BOTTOM ONLY AS SHOWN.
2. CONTOUR TOLERANCE: PARTS SHOULD ASSUME CONTOUR SHOWN WITHOUT EXCESSIVE STRAIN.

LET.	REVISION	DATE	BY
G	2 .081 HOLES REM.	12-21-50	FCS
F	5/8 WAS 1/2	8-15-46	J.D.B.
E	59 3/8 & 3 7/16 ADDED; 81 5/8 WAS 82 1/8	5-21-46	C.E.K.
D	90 14/16 FINISHED LENGTH REM.	5-21-46	C.E.K.
C	14 3/16, 81 5/32, 1 7/16 REMOVED	5-21-46	C.E.K.
B	ADDED WHITE OAK ALTERNATE	4-24-46	J.H.
A	REDRAWN & REVISED	3-12-46	C.E.K.

THIS DRAWING IS THE PROPERTY OF THE PIPER AIRCRAFT CORP. AND ITS POSSESSION BY UNAUTHORIZED PERSONS SHALL NOT BE CONSTRUED AS PERMISSION TO REPRODUCE FOR SALE, IN WHOLE OR IN PART. ANY DEVICES SHOWN THEREON

MODEL	PER PLANE	NEXT ASSEMBLY	SUPERSEDES	SUP. BY
J3	2	K323		

PIPER AIRCRAFT CORP.
LOCK HAVEN, PENNA.

PART NO.	NO. REQ.	SIZE	DESCRIPTION
		1/2 x 1 x 94 15/16	WHITE ASH OR WHITE OAK
		MATERIAL	

SCALE 3 IN. = 1 FT. & NOTED | TOTAL WT.—LBS.
FINISH—PIPER SPECIFICATION #10
MANUFACTURING PRACTICES—PIPER SPECIFICATION #9

BOW-WING TIP

DRAFTSMAN	CHECKER	STANDARDS
C.E.K. 3-12-46	C.E.T. 3-19-46	

16262

794

A794

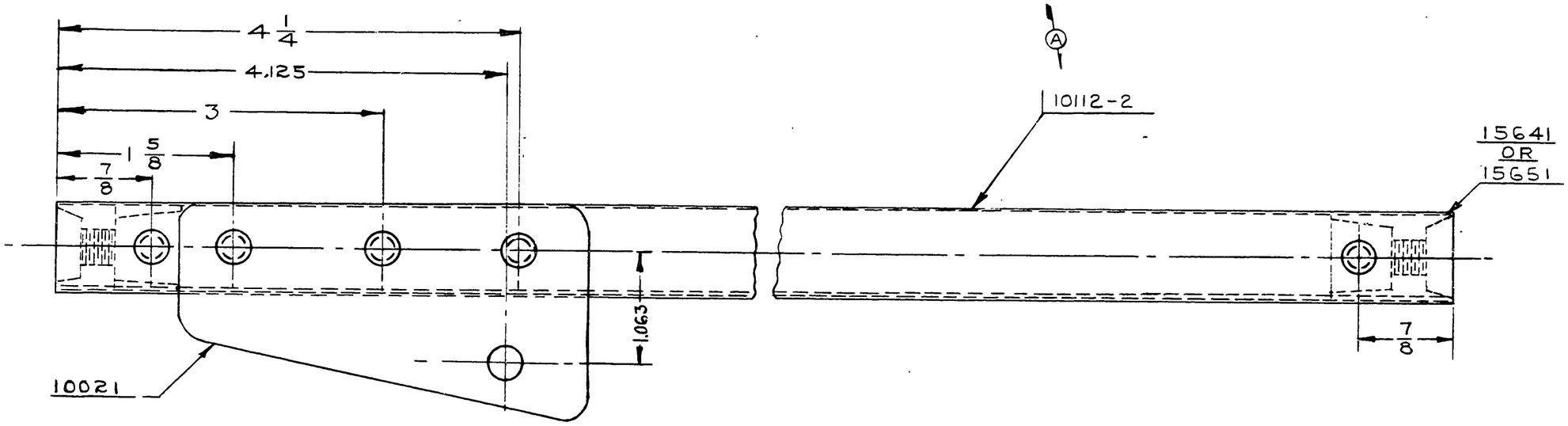

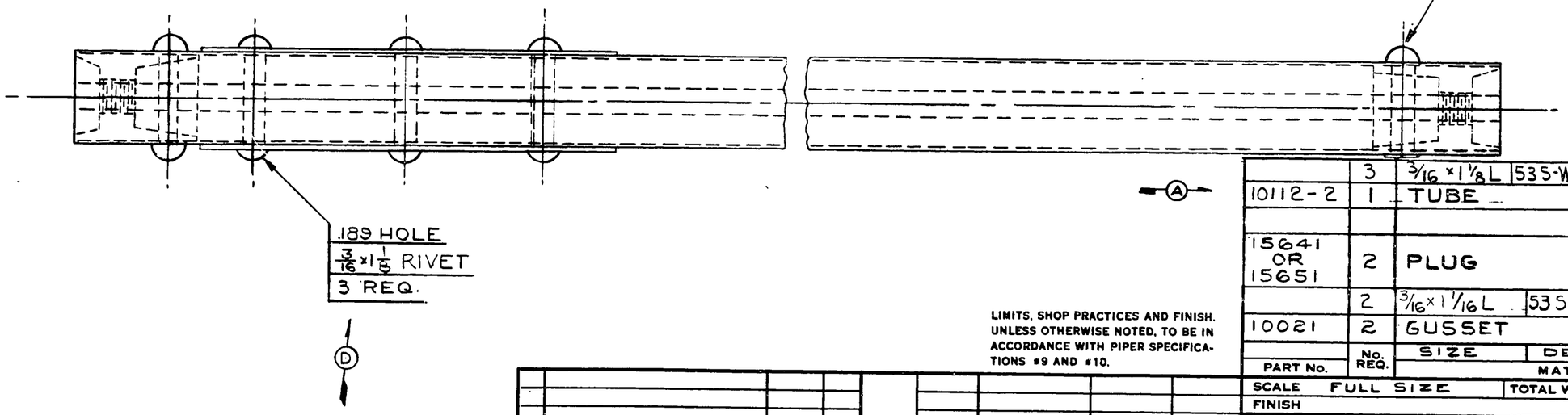

PART No.	No. REQ.	SIZE	DESCRIPTION / MATERIAL
	3	3/16 x 1 1/8 L	535-W ALUM. RD. HD. RIVET
10112-2	1		TUBE
15641 OR 15651	2		PLUG
	2	3/16 x 1 1/16 L	535-W ALUM. RD. HD. RIVET
10021	2		GUSSET

SCALE FULL SIZE — TOTAL WT.- LBS.

FINISH

LIMITS, SHOP PRACTICES AND FINISH, UNLESS OTHERWISE NOTED, TO BE IN ACCORDANCE WITH PIPER SPECIFICATIONS #9 AND #10.

LET.	REVISION	DATE	BY
G	10112-8 REMOVED	8-20-46	BC
F	J3 N.A. 15403 WAS 15556	6-20-46	BC
E	J3C N.A. 10718 WAS 14766	6-17-46	RJC
D	3-3/16 x 1 1/8 RIVETS ADDED	3-6-46	E.L.N.
C	3-3/16 x 1 1/16 RIVETS REM.	3-6-46	E.L.N.
B	J3 MODEL REF. ADDED	3-6-46	E.L.N.
A	10112-2 ADDED	11-6-45	LEK

MODEL	PER SHIP	NEXT ASSEMBLY	SUPERSEDES	SUP. BY
J3	2	15403		
J3C	2	10718		

PIPER AIRCRAFT CORP.
LOCK HAVEN, PENNA.

TUBE ASS'Y. — "N" BRACE UPPER

DRAWN	CHECKED	APPROVED
I. McNERNEY 6-14-44	R.E.T. 6-16-44	

16462

FOR METAL SPAR WING C

611

A611

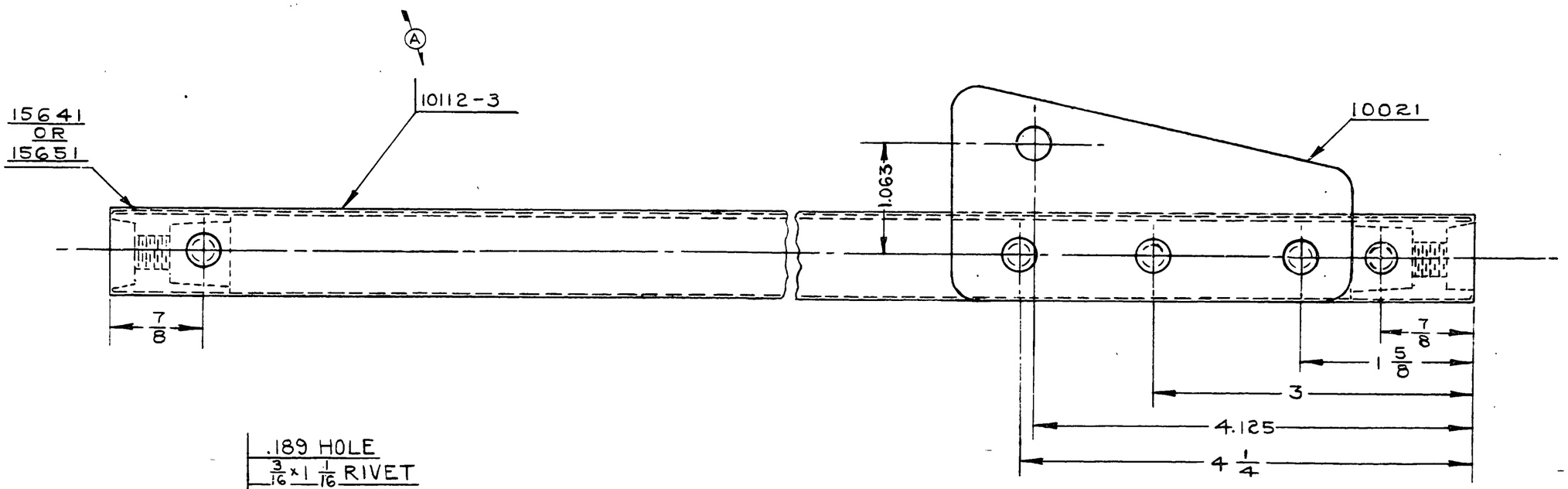

FIG. 1.

LIMITS, SHOP PRACTICES AND FINISH. UNLESS OTHERWISE NOTED, TO BE IN ACCORDANCE WITH PIPER SPECIFICATIONS #9 AND #10.

PART No.	No. REQ.	SIZE	DESCRIPTION / MATERIAL
	3	3/16 x 1 1/8 L.	53 S-W ALUM. RD. HD. RIVET
10112-3	1	TUBE —	
15641 OR 15651	2	PLUG	
	2	3/16 x 1 1/16 L	53 S-W ALUM. RD. HD. RIVET
10021	2	GUSSET	

SCALE FULL SIZE — TOTAL WT. - LBS.

FINISH

TUBE ASSY. — "N" BRACE LOWER

LET.	REVISION	DATE	BY
G	10112-9 REMOVED	8-20-46	BC
F	J3 N.A. 15403 WAS 15556	6-20-46	BC
E	J5C N.A. 10718 WAS 14766	6-17-46	RSC
D	3-3/16 x 1 1/8 RIVETS ADDED	3-6-46	E.L.N.
C	3-3/16 x 1 1/16 RIVETS REMOVED	3-6-46	E.L.N.
B	J3 MODEL REF. ADDED	3-6-46	E.L.N.
A	10112-3 ADDED	11-6-45	LEK

MODEL	PER SHIP	NEXT ASSEMBLY	SUPERSEDES	SUP. BY
J3	2	15403		
J5C	2	10718		

PIPER AIRCRAFT CORP.
LOCK HAVEN, PENNA.

DRAWN	CHECKED	APPROVED
I. McNERNEY 6-14-44	R.E.T. 6-16-44	

16472

FOR METAL SPAR WING

612

A612

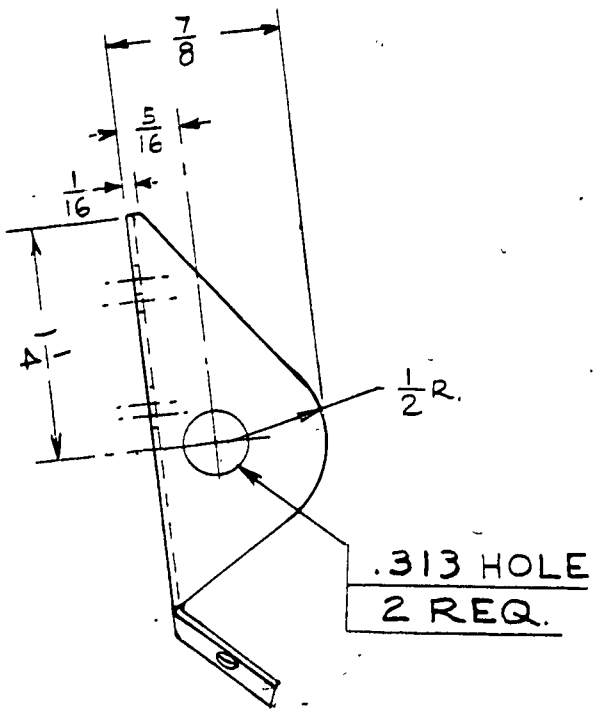

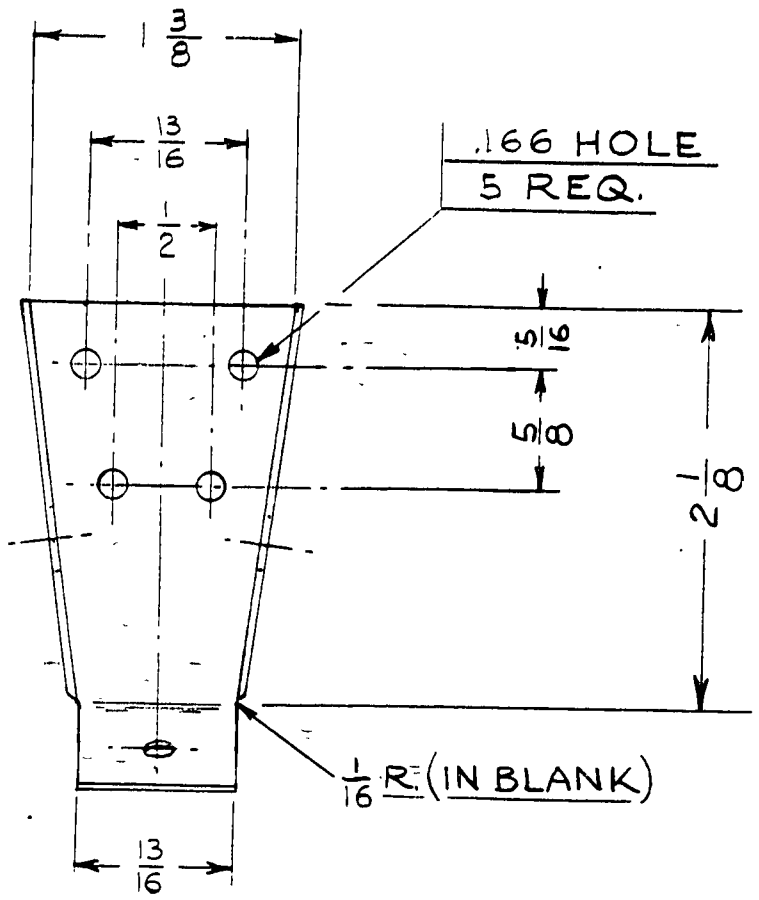

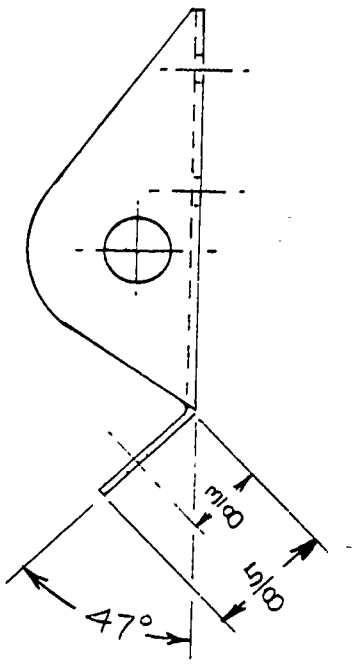

NOTE:
ALL BEND RADII 1/32

THIS DRAWING IS THE PROPERTY OF THE PIPER AIRCRAFT CORP. AND ITS POSSESSION BY UNAUTHORIZED PERSONS SHALL NOT BE CONSTRUED AS PERMISSION TO REPRODUCE FOR SALE, IN WHOLE OR IN PART, ANY DEVICES SHOWN THEREON.

MODEL	PER PLANE	NEXT ASSEMBLY	SUPERSEDES	SUP. BY
J5C	2	14766		
J3	2	14323	15781	

LET.	REVISION	DATE	BY
B	REDRAWN & REVISED	1-31-46	C.E.K.

PENCILTEX A. & B. SMITH CO., PGH., PA.

PIPER AIRCRAFT CORP.
LOCK HAVEN, PENNA.

PART No.	No. REQ.	SIZE	DESCRIPTION
		.032 × 2 3/4 × 2 7/8	F1025 STEEL

MATERIAL
SCALE FULL SIZE — TOTAL WT.—LBS.
FINISH—PIPER SPECIFICATION #10
MANUFACTURING PRACTICES—PIPER SPECIFICATION #9

FITTING - FRONT SPAR BOW REAR

DRAFTSMAN	CHECKER	STANDARDS
C.E.K. 1-31-45	R.E.T. 2-1-46	

16551

16551

220

A220

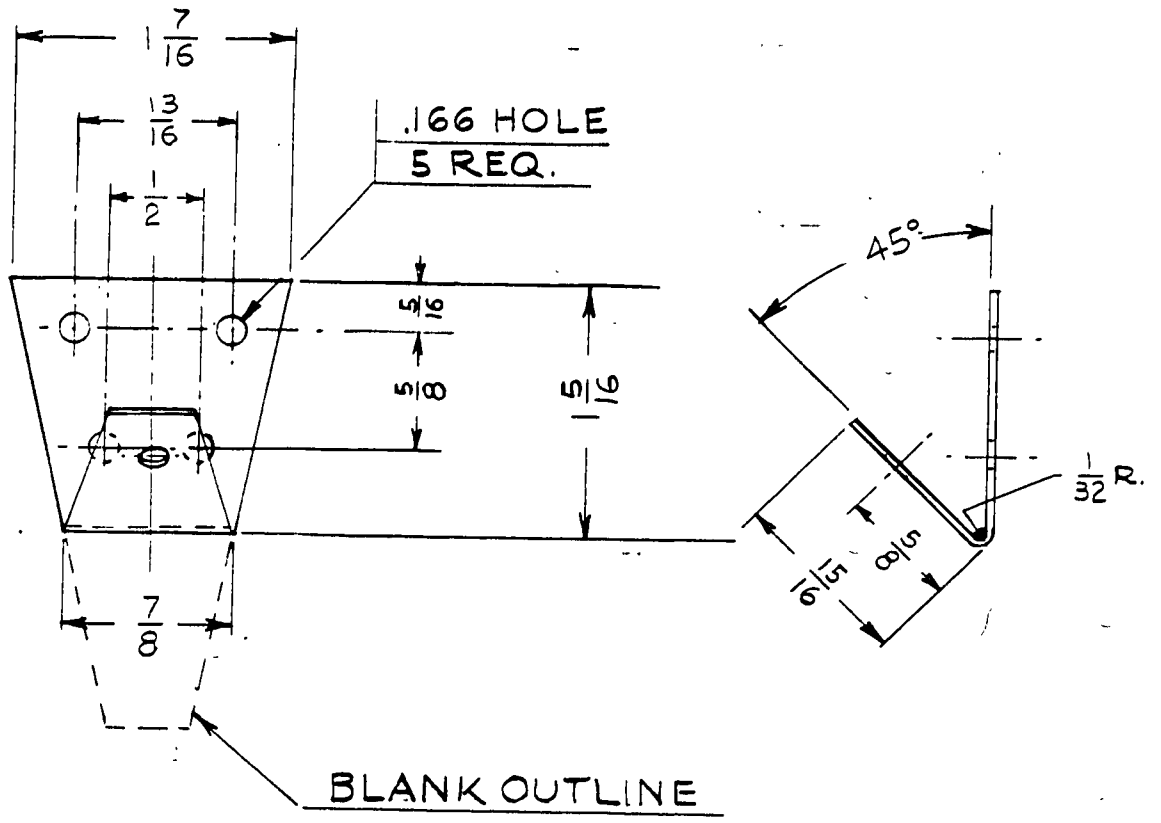

THIS DRAWING IS THE PROPERTY OF THE PIPER AIRCRAFT CORP. AND ITS POSSESSION BY UNAUTHORIZED PERSONS SHALL NOT BE CONSTRUED AS PERMISSION TO REPRODUCE FOR SALE, IN WHOLE OR IN PART, ANY DEVICES SHOWN THEREON.

PART No.	No. REQ.	SIZE	MATERIAL DESCRIPTION
		.032 x 1 7/16 X 2 1/4	#1025 STEEL

SCALE FULL SIZE — TOTAL WT.—LBS.

FINISH—PIPER SPECIFICATION #10

MANUFACTURING PRACTICES—PIPER SPECIFICATION #9

FITTING - FRONT SPAR BOW FRONT

MODEL	PER PLANE	NEXT ASSEMBLY	SUPERSEDES	SUP. BY
J5C	2	14766		
J3	2	14323	1579	

LET.	REVISION	DATE	BY
C	REDRAWN & REVISED	1-31-46	C.E.K.

PIPER AIRCRAFT CORP.
LOCK HAVEN, PENNA.

DRAFTSMAN	CHECKER	STANDARDS
C.E.K. 1-31-45	R.E.T. 2-1-46	

16561

PENCILTEX A. B. SMITH CO., PGH., PA.

A221

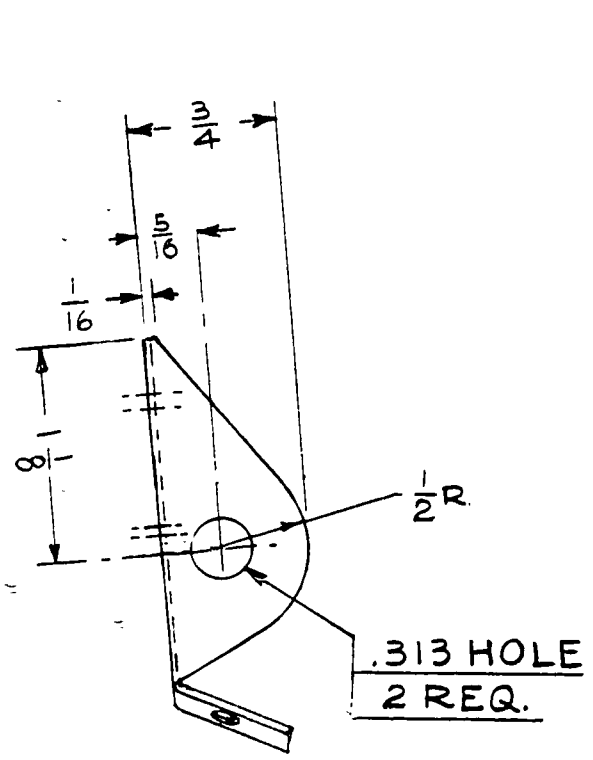

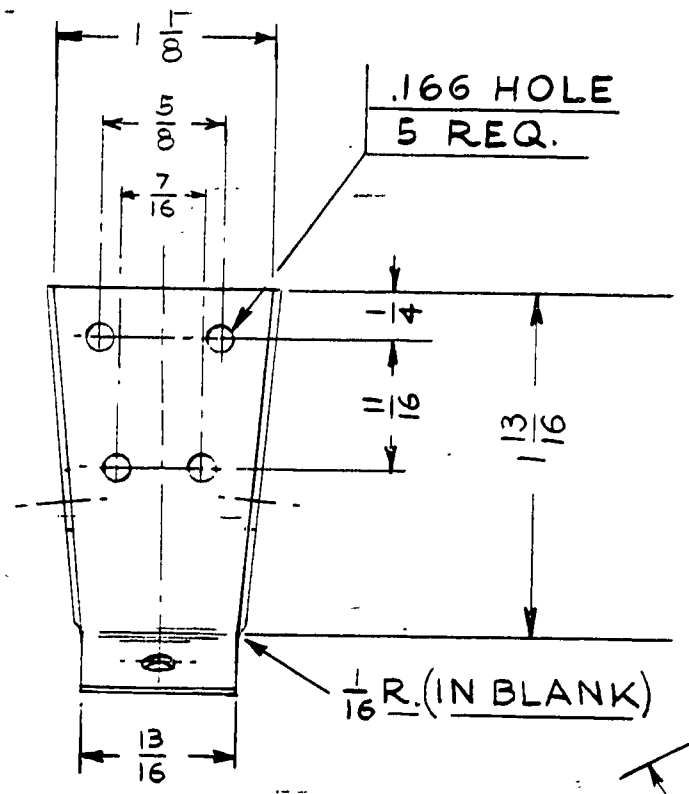

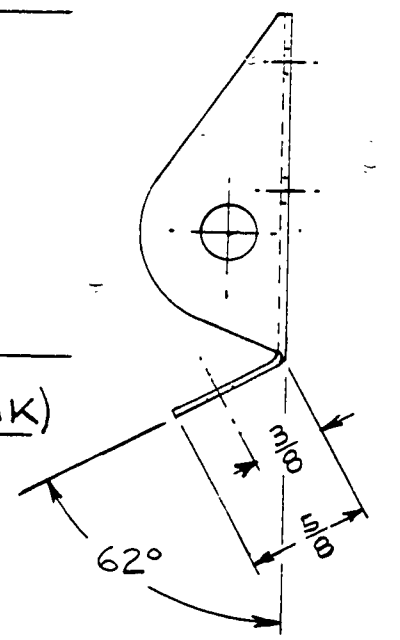

NOTE:
ALL BEND RADII 1/32

THIS DRAWING IS THE PROPERTY OF THE PIPER AIRCRAFT CORP. AND ITS POSSESSION BY UNAUTHORIZED PERSONS SHALL NOT BE CONSTRUED AS PERMISSION TO REPRODUCE FOR SALE, IN WHOLE OR IN PART, ANY DEVICES SHOWN THEREON.

LET.	REVISION	DATE	BY
B	REDRAWN & REVISED	1-31-46	C.E.K.

MODEL	PER PLANE	NEXT ASSEMBLY	SUPERSEDES	SUP. BY
J5C	2	14766		
J3	2	14323	10971	

PIPER AIRCRAFT CORP.
LOCK HAVEN, PENNA.

PART No.	No. REQ.	SIZE	MATERIAL
		.032 x 2 7/16 x 2 7/16	#1025 STEEL

SCALE FULL SIZE — TOTAL WT.—LBS.
FINISH—PIPER SPECIFICATION #10
MANUFACTURING PRACTICES—PIPER SPECIFICATION #9

FITTING - REAR SPAR BOW FRONT

DRAFTSMAN	CHECKER	STANDARDS	
C.E.K. 1-31-46	R.E.T. 2-1-46		16601

PENCILTEX A. & B. SMITH CO., PGH., PA.

221

A222

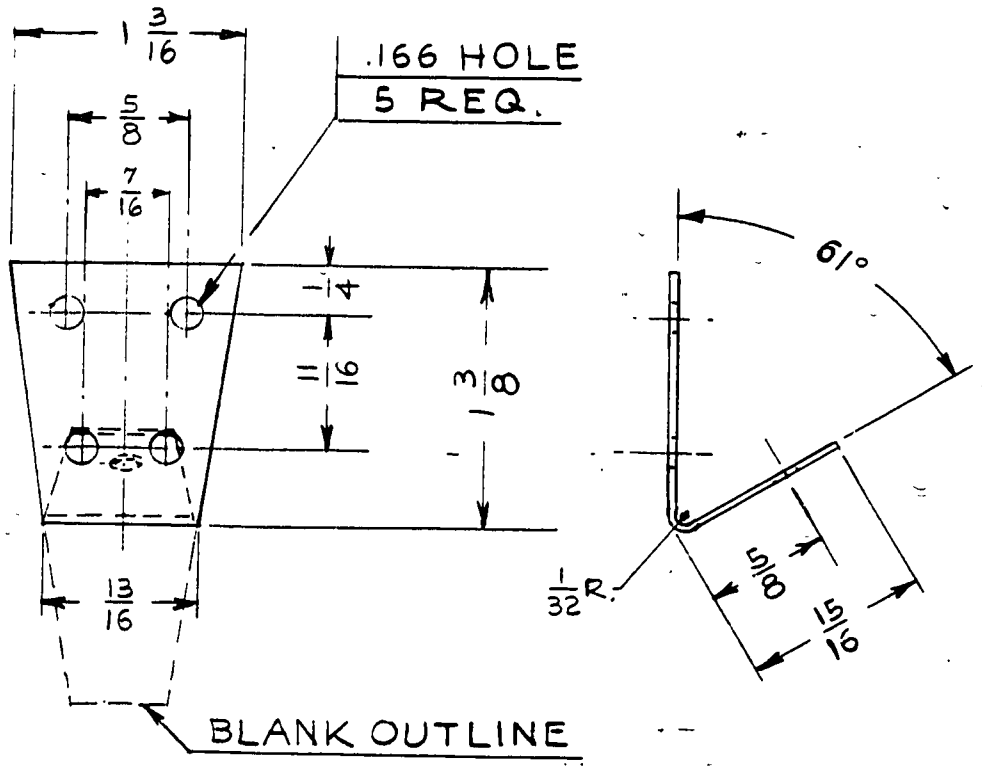

THIS DRAWING IS THE PROPERTY OF THE PIPER AIRCRAFT CORP. AND ITS POSSESSION BY UNAUTHORIZED PERSONS SHALL NOT BE CONSTRUED AS PERMISSION TO REPRODUCE FOR SALE, IN WHOLE OR IN PART, ANY DEVICES SHOWN THEREON.

MODEL	PER PLANE	NEXT ASSEMBLY	SUPERSEDES	SUP. BY
J5C	2	14766		
J3	2	14323	10961	

LET.	REVISION	DATE	BY
D	REDRAWN & REVISED	1-31-46	C.E.K.

PENCILTEX A. & B. SMITH CO., PGH., PA.

PIPER AIRCRAFT CORP.
LOCK HAVEN, PENNA.

PART No.	No. REQ.	SIZE	DESCRIPTION
	-	.032 x 1 3/16 x 2 5/16	#1025 STEEL
		MATERIAL	

SCALE FULL SIZE — TOTAL WT.—LBS.

FINISH—PIPER SPECIFICATION #10

MANUFACTURING PRACTICES—PIPER SPECIFICATION #9

FITTING - REAR SPAR BOW REAR

DRAFTSMAN	CHECKER	STANDARDS
C.E.K. 1-31-46	R.E.T. 2-1-46	

16611

223

A223

WAS SK-106

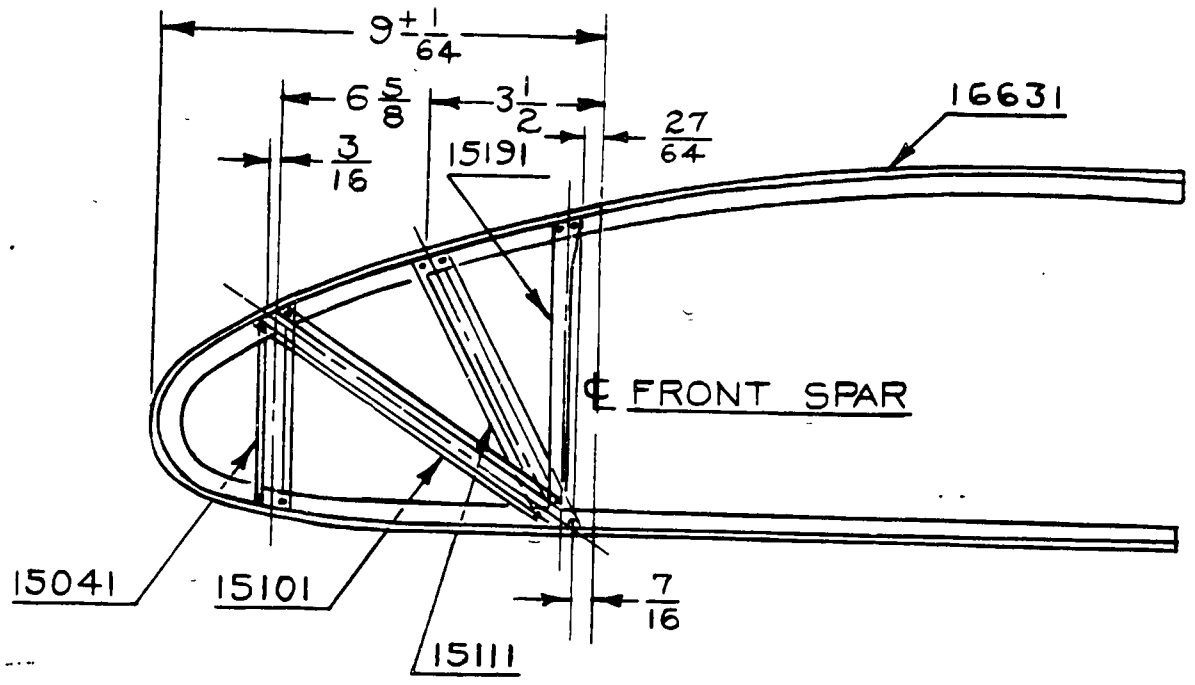

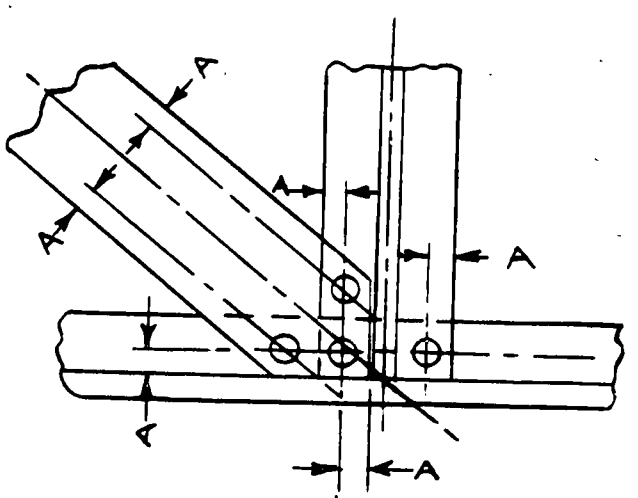

A = 1/8 MIN.
TYPICAL JOINT
FULL SIZE

NOTE:
ALL RIVETS 3/32 (.098 HOLE)

	11	3/32 x 9/64 L.	STL. TUBULAR CADMIUM PLATED RIVET
16631	1	CAPSTRIP	
15191	1	#1 ANGLE BRACE	
15111	1	#2 DIAGONAL BRACE	
15101	1	#1 DIAGONAL BRACE	
15041	1	#1 VERTICAL BRACE	
PART No.	No. REQ.	SIZE	DESCRIPTION / MATERIAL

SCALE 3 IN. = 1 FT. & NOTED — TOTAL WT.—LBS.
FINISH—PIPER SPECIFICATION #10
MANUFACTURING PRACTICES—PIPER SPECIFICATION #9

MODEL	PER PLANE	NEXT ASSEMBLY	SUPERSEDES	SUP. BY
L4A		16643		
J3		16643		

LET.	REVISION	DATE	BY
A	J3 & L4A MODEL REF. WAS J3 SERIES	11-16-44	DB.

PENCILTEX A. & B. SMITH CO., PGH., PA.

PIPER AIRCRAFT CORP.
LOCK HAVEN, PENNA.

SECTION — WING
RIB REPAIR

DRAFTSMAN	CHECKER	STANDARDS
I. McNERNEY 8-23-44	R.E.T. 8-25-44	

16621

124

A224

This page intentionally left blank.

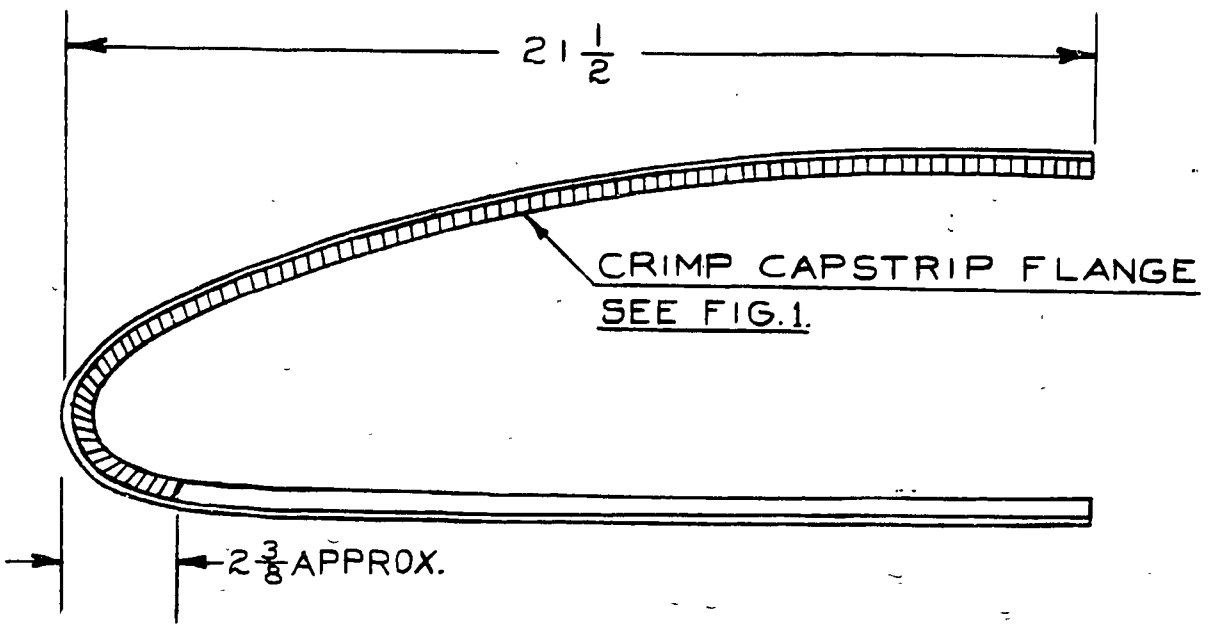

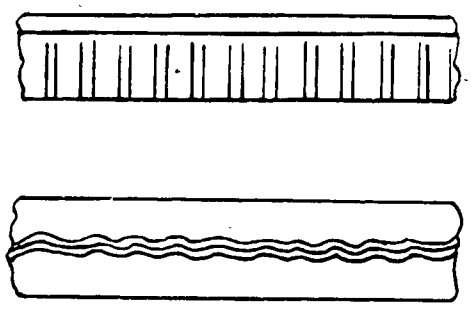

FIG. 1.
FULL SIZE

NOTE:
FOR CAPSTRIP CONTOUR
SEE DRAWING 13814

(A)

				J5C		16661		
				J5		16661		
				J4		16661		
				J4A		16621		
				J3		16621		
				MODEL	PER PLANE	NEXT ASSEMBLY	SUPERSEDES	SUP. BY
A	J3 J4A WAS J3 SERIES J4, J5, J5C ADDED	10-17-44	I.D.B.					
LET.	REVISION	DATE	BY					

PENCILTEX A. & B. SMITH CO., PGH., PA.

PIPER AIRCRAFT CORP.
LOCK HAVEN, PENNA.

13814	DWG. REF. ONLY	WING FULL RIB OUTLINE	
84771	DWG. REF. ONLY	RIB CAPSTRIP SECTION	
		45 3/4 L.	PIPER SECTION 84771
PART No.	No. REQ.	SIZE	DESCRIPTION
		MATERIAL	
SCALE 3 IN. = 1 FT. & NOTED		TOTAL WT.–LBS.	
FINISH–PIPER SPECIFICATION #10			
MANUFACTURING PRACTICES–PIPER SPECIFICATION #9			

CAPSTRIP — WING
RIB REPAIR SECTION

I.McNERNEY	R. E. T.		16631
8-24-44	8-25-44		
DRAFTSMAN	CHECKER	STANDARDS	

225

A 225

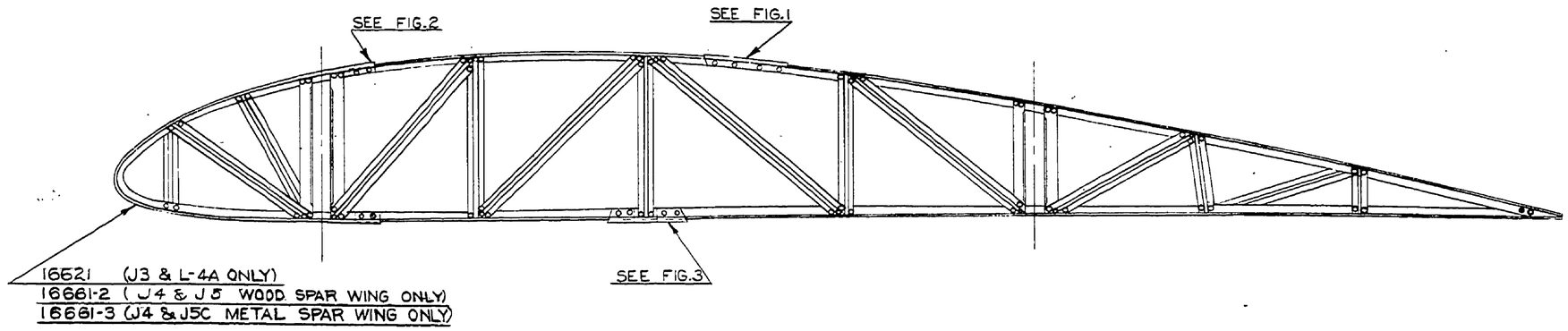

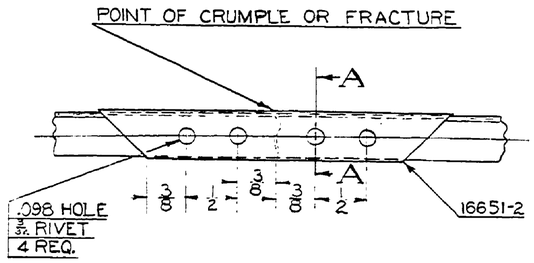

FIG. 1
FULL SIZE

NOTE: THIS REPAIR MAY BE USED AT ANY POINT ON CAPSTRIP EXCEPT AT CLUSTERS OR FORWARD OF FRONT SPAR.

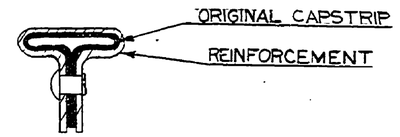

SECTION A-A
TWICE SIZE

NOTE: FORM REINFORCEMENT OVER CAPSTRIP AND RIVET TO WEB OF CAPSTRIP AS SHOWN.

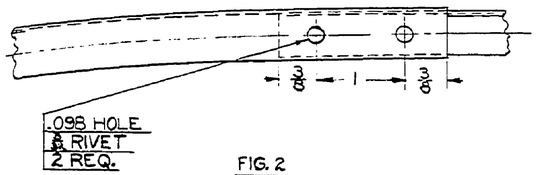

FIG. 2
FULL SIZE

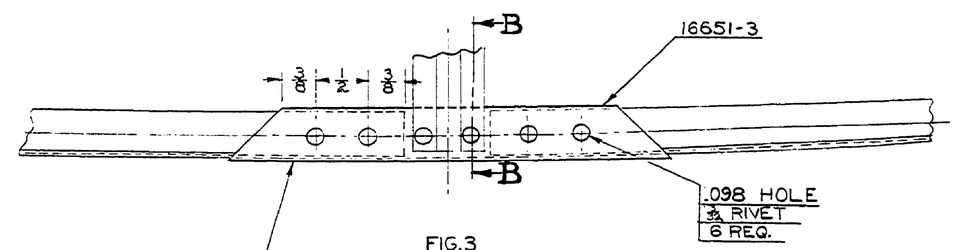

FIG. 3
FULL SIZE

NOTE: FORM REINFORCEMENT OVER CAPSTRIP AND RIVET TO WEB OF CAPSTRIP AS SHOWN.

NOTE: CAPSTRIP MAY BE SPLICED OR REINFORCED ANYWHERE EXCEPT FORWARD OF FRONT SPAR OR AT A CLUSTER.

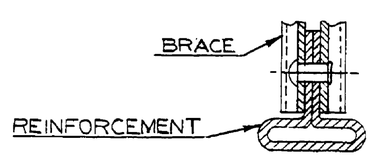

SECTION B-B
TWICE SIZE

PART No.	No. REQ.	MATERIAL
16661-3		REPAIR SECTION (J4, J5C METAL SPAR WING ONLY)
16661-2		REPAIR SECTION (J4 & J5 WOOD SPAR WING ONLY)
		3/32 × 9/16 L 2S-0 ALUM. BR. HD. RIVET
16651-3		REINFORCEMENT
16651-2		REINFORCEMENT
16621		REPAIR SECTION (J3, L-4A ONLY)

SCALE NOTED — TOTAL WT.—LBS.
FINISH—PIPER SPECIFICATION #10
MANUFACTURING PRACTICES—PIPER SPECIFICATION #9

LET.	REVISION	DATE	BY
B	J5C NA16355 REMOVED	11-29-45	I.D.B.
A	J5C MODEL REF. REM. FROM 16661-2	[illegible]	[illegible]

MODEL	PER PLANE	NEXT ASSEMBLY	SUPERSEDES	SUP. BY
J5				
J4				
J5C		14766		
L-4A		13004		
J3		13004, 15556		

PIPER AIRCRAFT CORP.
LOCK HAVEN, PENNA.

REPAIRS - RIB

E.L.N. — R.E.T. — DRAFTSMAN — CHECKER — STANDARDS

16643

795

A795

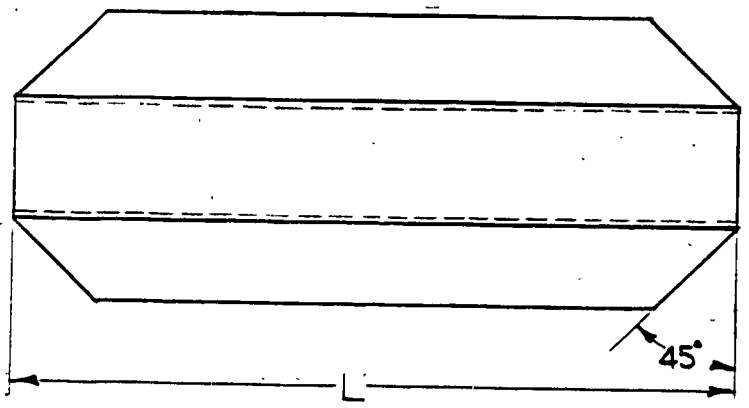

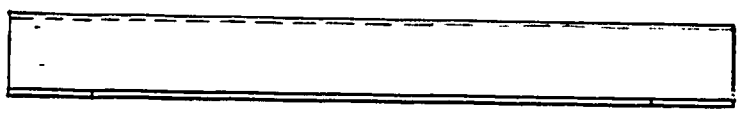

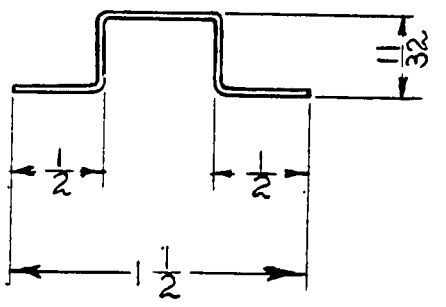

PART NO.	L
16651-2	3 1/2
16651-3	4 5/16

NOTE: ALL BEND RADII 1/16

LET.	REVISION	DATE	BY

MODEL	PER PLANE	NEXT ASSEMBLY	SUPERSEDES	SUP. BY
J5S		16643		
J5		16643		
J4		16643		
J-4A		16643		
J3		16643		

PIPER AIRCRAFT CORP.
LOCK HAVEN, PENNA.

PART No.	No. REQ.	SIZE	DESCRIPTION
		.032 x 2 1/32 x NOTED	3S-1/2H. ALUM.
		MATERIAL	

SCALE FULL SIZE | TOTAL WT.—LBS.

FINISH—PIPER SPECIFICATION #10

MANUFACTURING PRACTICES—PIPER SPECIFICATION #9

REINFORCEMENT - RIB REPAIR

E.L.N.	R.E.T.		
10-3-44	10-5-44		16651
DRAFTSMAN	CHECKER	STANDARDS	

PENCILTEX A. & B. SMITH CO., PGH., PA.

226

A226

WAS 206 / D28-A

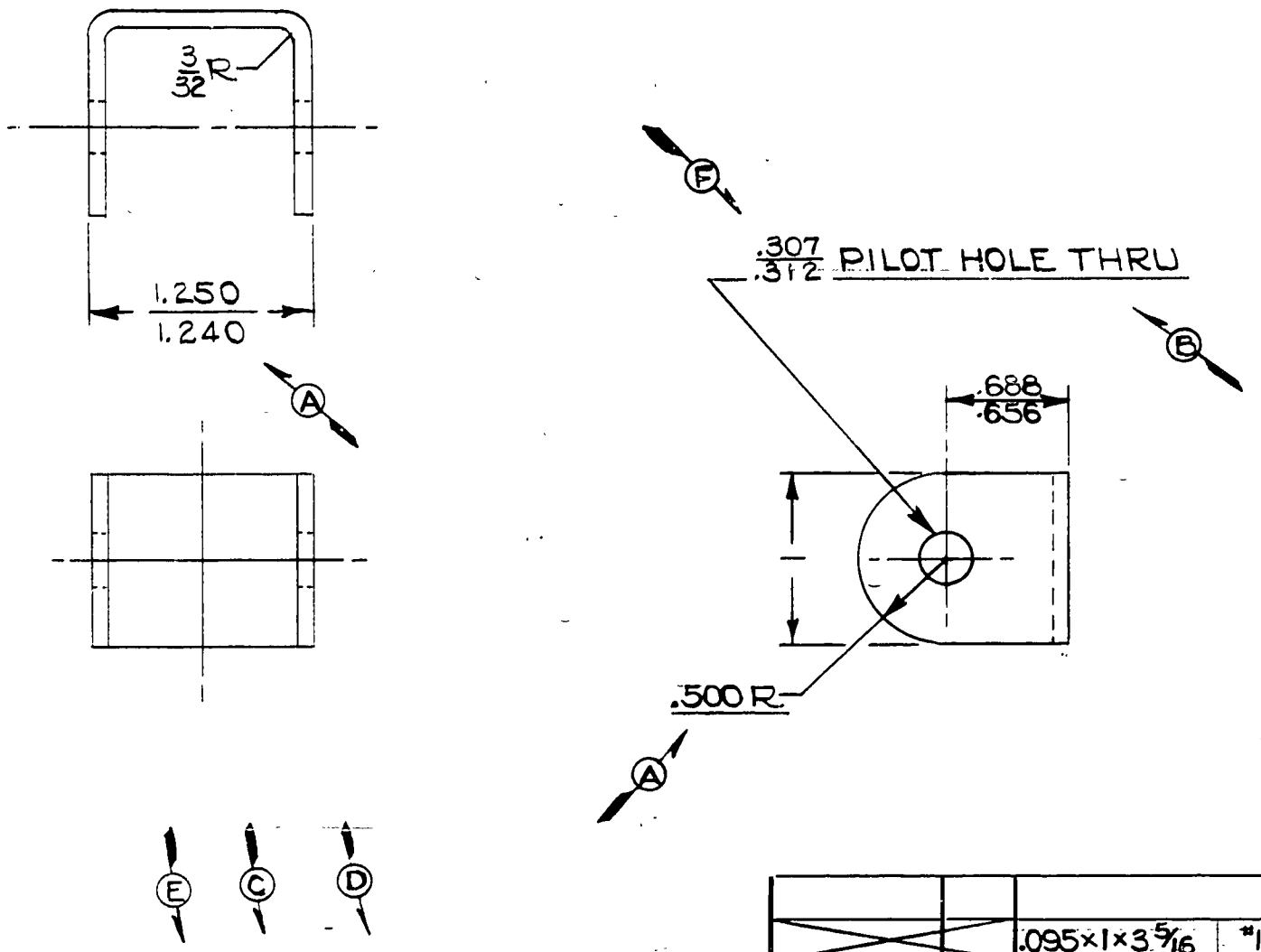

LET	REVISION	DATE	BY
G	REDRAWN WITHOUT CHANGE	8-20-51	I.E.M.
E	.307/.312 WAS .250	11-19-45	D.A.W.
E	L-14 MODEL REF. ADDED	6-14-45	J.B.M.
D	J5C N.A. 24045 WAS 20192	11-5-43	H.R.K.
C	2 PER S/P WAS 1 FOR J5, J5C, J5D, HE-1	10-1-43	L.R.
B	.250 PILOT HOLE WAS 5/16 HOLE	10-1-43	L.R.
A	1.250/1.240 WAS 1 1/4; .500 WAS 1/2	10-1-43	L.R.

MODEL	PER PLANE	NEXT ASSEMBLY	SUPERSEDES	SUP. BY
L-14	2	90339		
		90340		
J5D	2	20192, 20162		
HE-1	2	20162, 20192		
J5C	2	24045		
J5	2	20162, 20192		
J4	2	D29-B		

THIS DRAWING IS THE PROPERTY OF THE PIPER AIRCRAFT CORP. AND ITS POSSESSION BY UNAUTHORIZED PERSONS SHALL NOT BE CONSTRUED AS PERMISSION TO REPRODUCE FOR SALE IN WHOLE OR IN PART ANY DEVICES SHOWN THEREON.

PIPER AIRCRAFT CORP.
LOCK HAVEN, PENNA.

PART NO.	NO. REQ.	SIZE	MATERIAL
		.095×1×3 5/16	#1025 STEEL

SCALE FULL SIZE | TOTAL WT.—LBS.

FINISH—PIPER SPECIFICATION # 10

MANUFACTURING PRACTICES—PIPER SPECIFICATION # 9

FITTING - FUSELAGE
WING HINGE "U"

DRAFTSMAN	CHECKER	STANDARDS
W.N. EMERY 7-18-41	V. F. 8-22-41	

20151

227

A227

WAS J2-A28 / J2-A222

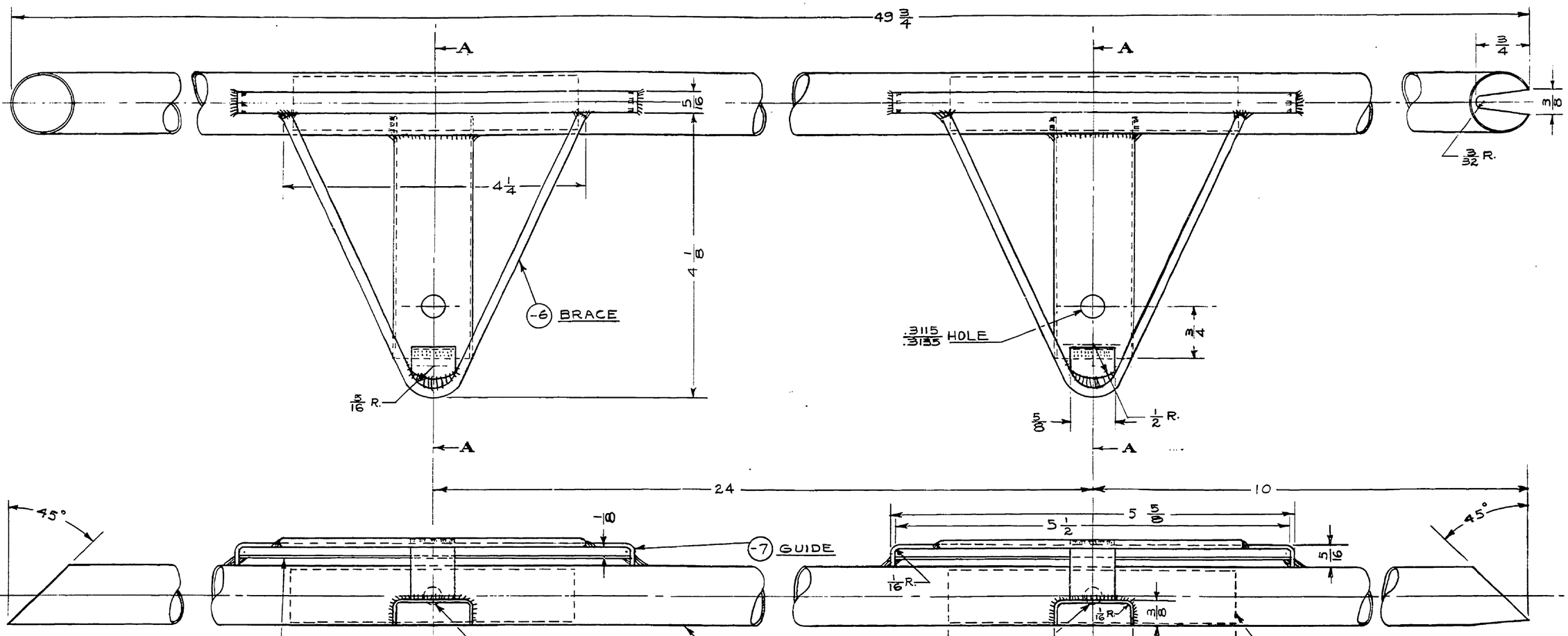

SECTION A-A

PARTS MARKED THUS △ ALSO ON 22632 (MODEL HE-1, TG-8)

20383 AS SHOWN

20383-12 AS SHOWN, LESS -8

LIMITS, SHOP PRACTICES AND FINISH, UNLESS OTHERWISE NOTED, TO BE IN ACCORDANCE WITH PIPER SPECIFICATIONS #9 AND #10.

PART NO.	NO. REQ.	SIZE	DESCRIPTION MATERIAL
80132-6	2		LINER
-11	-		ASS'Y. CONSISTS OF -2 & 2 OF 80132-6
-10	-		ASS'Y. CONSISTS OF -3 & -5
-9	-		ASS'Y. CONSISTS OF -7 & -8 (USED ON 20383 ONLY)
△ -8	2	.020 x 5/16 x 5 1/2	H.R. STEEL (USED ON 20383 ONLY)
△ -7	2	.062 x 5/16 x 6 1/16	#1025 STEEL
△ -6	2	1/8 x 9 5/16	1010 C.F. STEEL WIRE
△ -5	2	.032 x 1 3/8 x 3 1/2	#1025 STEEL
△ -3	2	.032 x 5/8 x 1 5/16	#1025 STEEL
△ -2	1	7/8 x .035 x 49 13/16	#4130 STEEL SEAMLESS TUBE

SCALE FULL SIZE — TOTAL WT.-LBS.

FINISH

MODEL	PER SHIP	NEXT ASSEMBLY	SUPERSEDES	SUP. BY
TG-8	1	22626		
J5,J5D	1	20873		
L-4B	1	21346		
J3	1	21346		
L-4A	1	21346		
J5C	1	20873		

LET	REVISION	DATE	BY
P	-12 & NOTE ADDED	3-25-47	I.D.B.
O	REDRAWN, NO CHANGE	2-26-44	I.D.B.

PIPER AIRCRAFT CORP.
LOCK HAVEN, PENNA.

BRACKET ASSEMBLY - FUSELAGE THROTTLE

DRAWN	CHECKED	APPROVED
I. BARNARD 2-26-44	C.K. 2-26-44	

20383

796

A796

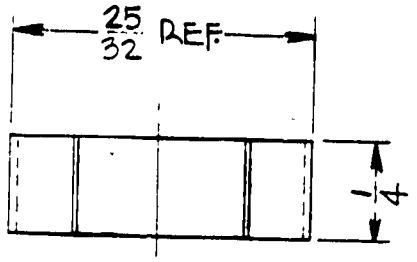



ACTUAL SIZE

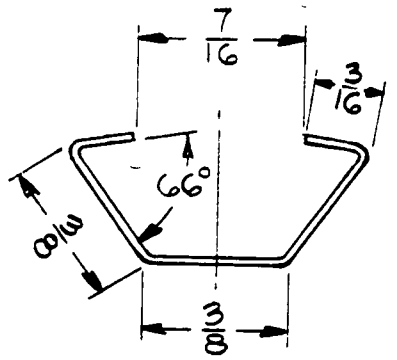

MODEL	PER SHIP	NEXT ASSEMBLY
J5D.	50	21896, 20412, 21703
L-4A	13	21861, 21852
HE-1	40	20412, 23235, 23176, 21703
J4	56	D274-E, D275-A
J3, TG-8	19	21842, 21852, 21861, 21832
J5	29	20412, 21703
L-4B	14	21861, 21852
J5C	47	24066 21703

NOTE: ALL RADII ARE 3/64

LET	REVISION	DATE	BY
G	REDRAWN WITHOUT CHANGE	6-20-51	M.G.
F	NA 20412 & 2 P/S REM. FOR J5C	8-1-46	I.D.B.
E	49 P/S WAS 50 FOR J5C	3-18-46	L.R.
D	J5C NEXT ASSY. 24066 WAS 21896	11-4-43	M.G.S.
C	REDRAWN & REVISED	4-2-43	I.D.B.

NOTED MODEL | NOTED PER PLANE | NOTED NEXT ASSEMBLY | SUPERSEDES | SUP. BY

THIS DRAWING IS THE PROPERTY OF THE PIPER AIRCRAFT CORP. AND ITS POSSESSION BY UNAUTHORIZED PERSONS SHALL NOT BE CONSTRUED AS PERMISSION TO REPRODUCE FOR SALE IN WHOLE OR IN PART ANY DEVICES SHOWN THEREON.

PIPER AIRCRAFT CORP.
LOCK HAVEN, PENNA.

PART NO.	NO. REQ.	SIZE	DESCRIPTION / MATERIAL
		.045 × 1/4 × 1 1/2	#1025 STEEL

SCALE TWICE SIZE | TOTAL WT.—LBS.

FINISH—PIPER SPECIFICATION # 10

MANUFACTURING PRACTICES—PIPER SPECIFICATION # 9

CLAMP—FAIRING STRIP

DRAFTSMAN	CHECKER	STANDARDS
I. D. B. 4-2-43	L. E. K. 5-24-43	

20391

228

A228

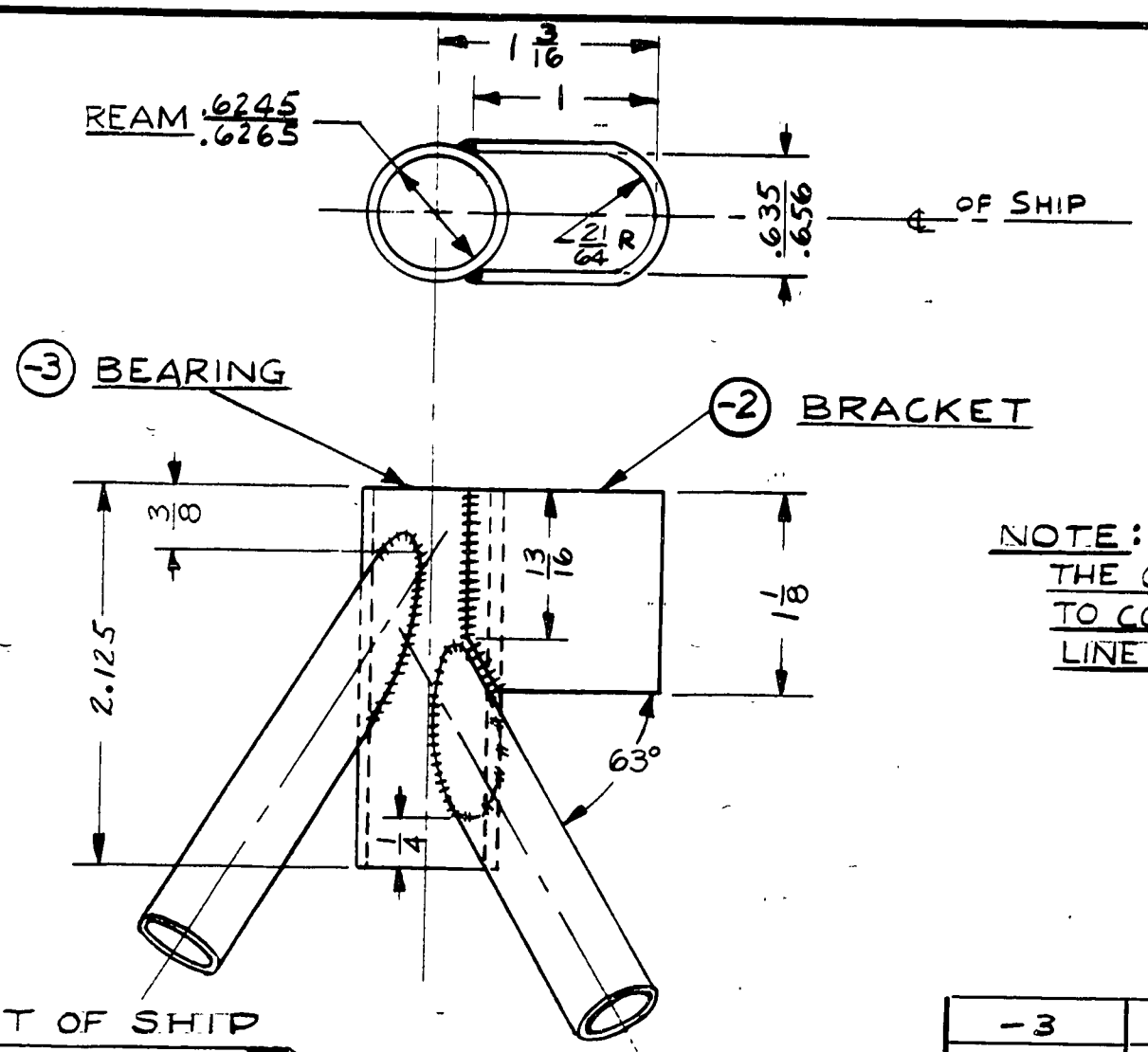

NOTE:
THE CENTER LINE OF -3 BEARING TO COINCIDE WITH THE CENTER LINE OF LOWER BEARING.

PART NO.	NO. REQ.	SIZE	DESCRIPTION / MATERIAL
-3	1	3/4 x .065 x 2 1/8	#1025 STEEL SEAMLESS TUBE
-2	1	.062 x 1 1/8 x 2 1/2	#1025 STEEL

SCALE FULL SIZE | TOTAL WT.—LBS.

FINISH—PIPER SPECIFICATION # 10

MANUFACTURING PRACTICES—PIPER SPECIFICATION # 9

LET	REVISION	DATE	BY
L	REDRAWN & REVISED	6-20-51	C.B.

MODEL	PER PLANE	NEXT ASSEMBLY	SUPERSEDES	SUP. BY

THIS DRAWING IS THE PROPERTY OF THE PIPER AIRCRAFT CORP. AND ITS POSSESSION BY UNAUTHORIZED PERSONS SHALL NOT BE CONSTRUED AS PERMISSION TO REPRODUCE FOR SALE IN WHOLE OR IN PART ANY DEVICES SHOWN THEREON.

PIPER AIRCRAFT CORP.
LOCK HAVEN, PENNA.

BEARING INSTALLATION-STAB. SCREW UPPER

DRAFTSMAN	CHECKER	STANDARDS
C.E.B. 6-20-51	H. R. K. 6-21-51	

20491

229

A229

WAS 2569 / D2155-A

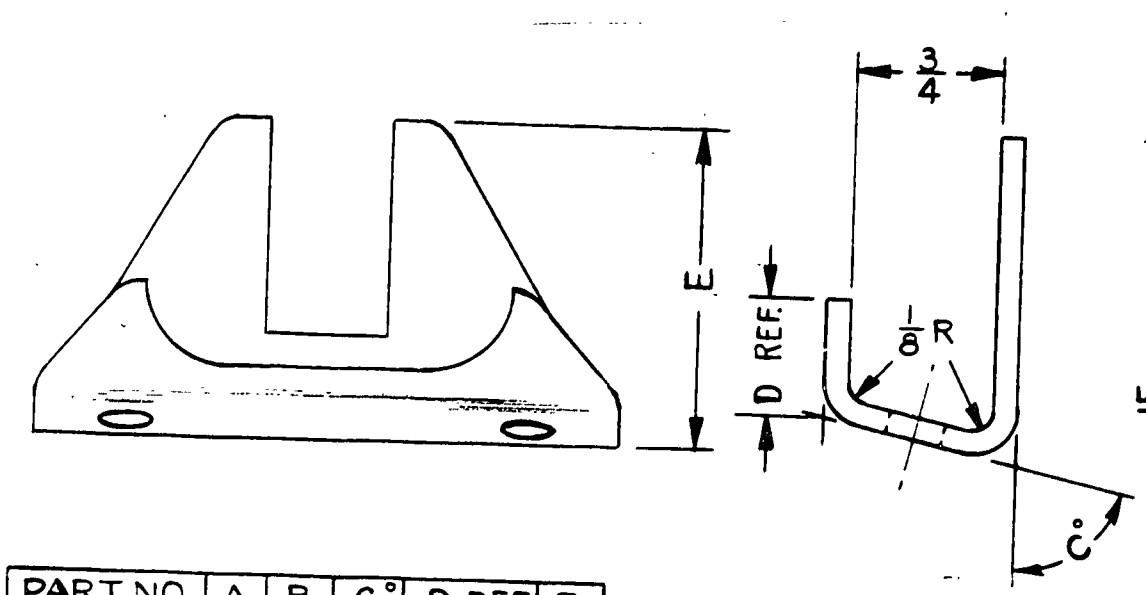

PART NO.	A	B	C°	D REF.	E
20611	1 15/16	1 1/8	76°	5/8	1 11/16
20611-2	1 3/4	3/4	83°	13/16	1 1/2

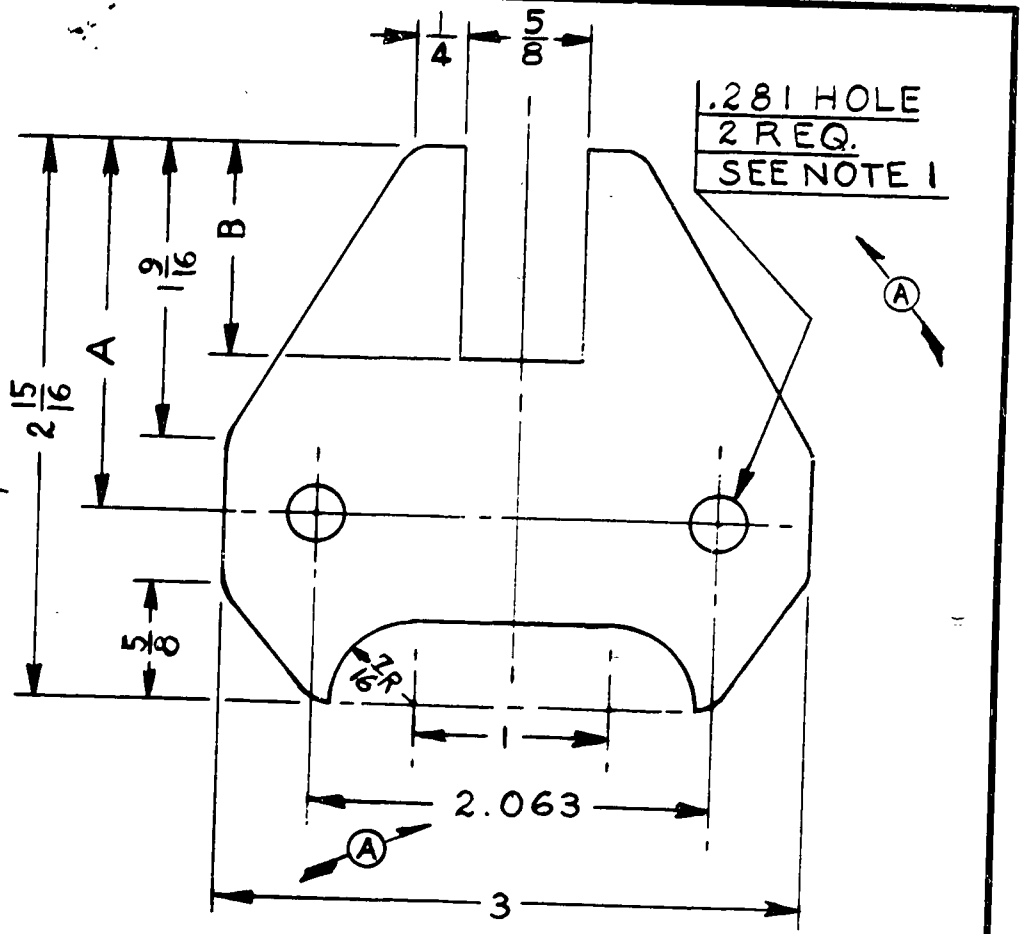

NOTE 1. HOLES SHALL COINCIDE WITH RELATED HOLES ON 30531.
2. UNLESS OTHERWISE INDICATED, ALL RADII ARE 3/16.

BLANK DETAIL

MODEL	PER PLANE	NEXT ASSEMBLY	SUPERSEDES	SUP. BY
HE-1	1	20642		
J5C; J5D	1	20642		
L4A; L4B	1	20642		
J3; TG-8	1	20642		
J5	1	20642		

LET	REVISION	DATE	BY
C	REDRAWN WITHOUT CHANGE	6-20-51	C.K.
B	-2 & TABLE ADDED	3-9-51	M.G.
A	DIMS. REVISED; NOTE 1 ADDED	5-14-43	C.E.K.

THIS DRAWING IS THE PROPERTY OF THE PIPER AIRCRAFT CORP. AND ITS POSSESSION BY UNAUTHORIZED PERSONS SHALL NOT BE CONSTRUED AS PERMISSION TO REPRODUCE FOR SALE IN WHOLE OR IN PART ANY DEVICES SHOWN THEREON.

PIPER AIRCRAFT CORP.
LOCK HAVEN, PENNA.

PART NO.	NO. REQ.	SIZE	DESCRIPTION / MATERIAL
		.125 × 2 15/16 × 3	#1025 STEEL

SCALE FULL SIZE | TOTAL WT.—LBS.
FINISH—PIPER SPECIFICATION # 10
MANUFACTURING PRACTICES—PIPER SPECIFICATION # 9

FITTING-FUSELAGE TAILSKID REAR

DRAFTSMAN	CHECKER	STANDARDS
W. N. Emery 8-4-41	V. F. 8-25-41	

20611

230

A 230

WAS 2571
D-2157-A

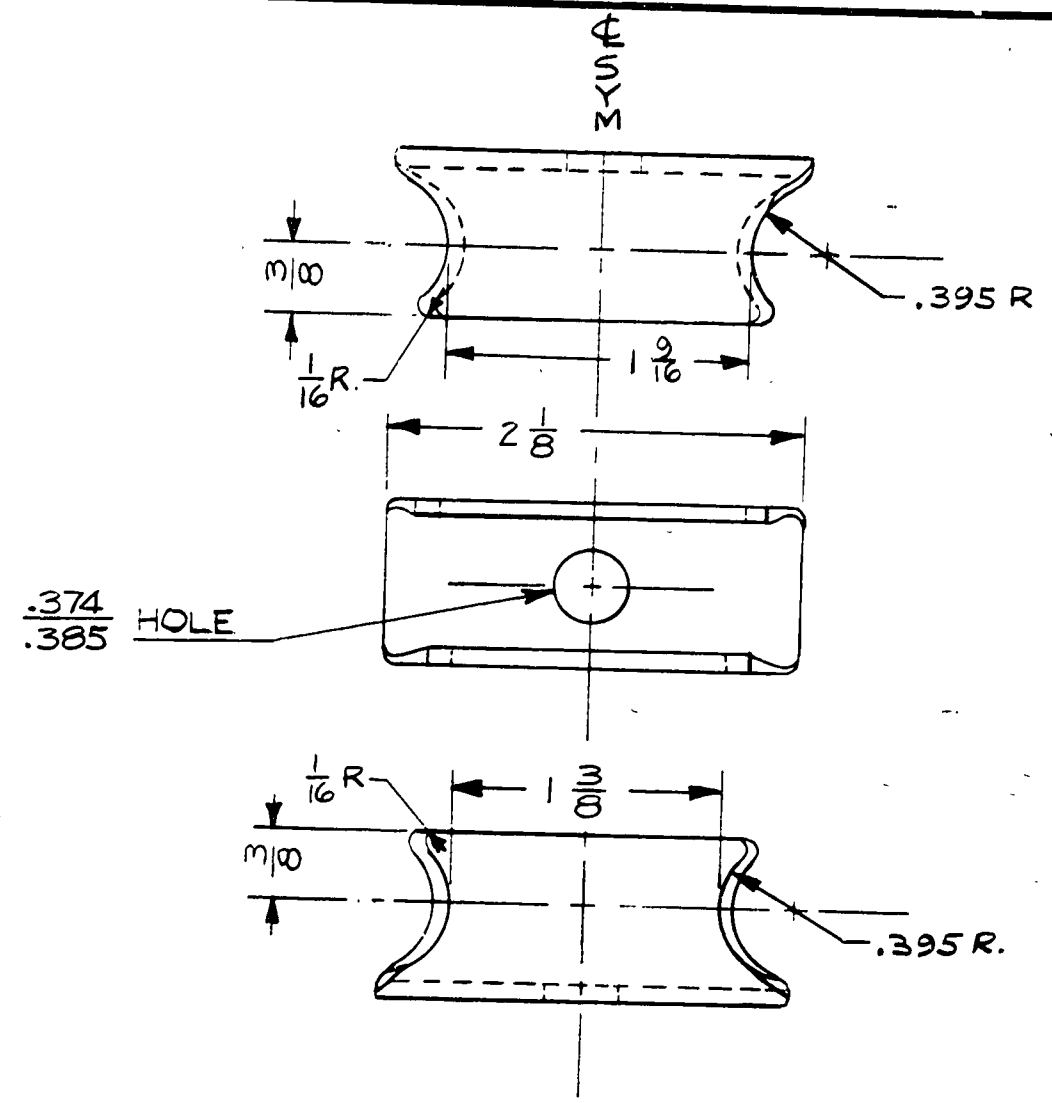

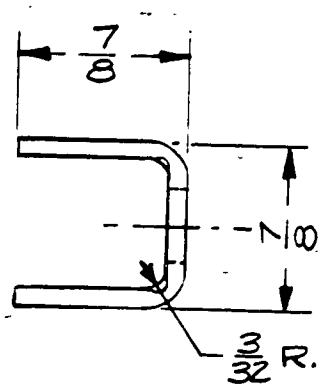

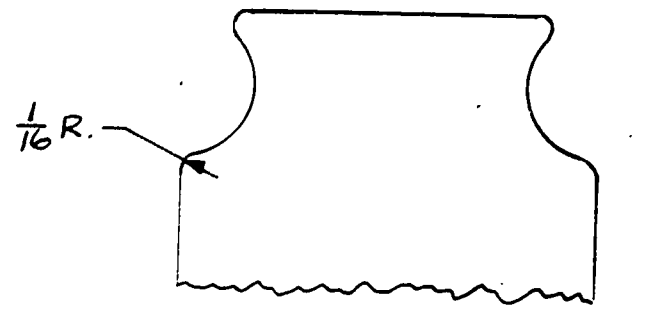

BLANK PATTERN

LET	REVISION	DATE	BY
E	REDRAWN WITHOUT CHANGE	6-20-51	C.E.B.
D	REDRAWN & REVISED	9-10-43	RRR

MODEL	PER PLANE	NEXT ASSEMBLY	SUPERSEDES	SUP. BY
J5C	1	20642		
J-4A	1	20642		
J3	1	20642		

THIS DRAWING IS THE PROPERTY OF THE PIPER AIRCRAFT CORP. AND ITS POSSESSION BY UNAUTHORIZED PERSONS SHALL NOT BE CONSTRUED AS PERMISSION TO REPRODUCE FOR SALE IN WHOLE OR IN PART ANY DEVICES SHOWN THEREON.

PIPER AIRCRAFT CORP.
LOCK HAVEN, PENNA.

PART NO.	NO. REQ.	SIZE	DESCRIPTION / MATERIAL
		.095x2 1/8x2 9/32	*1025 STEEL

SCALE FULL SIZE | TOTAL WT.—LBS.

FINISH—PIPER SPECIFICATION # 10

MANUFACTURING PRACTICES—PIPER SPECIFICATION # 9

FITTING - FUSELAGE TAILSKID FRONT "U"

DRAFTSMAN	CHECKER	STANDARDS
R. FRANK 9-10-43	C.K. 9-11-43	

20631

231

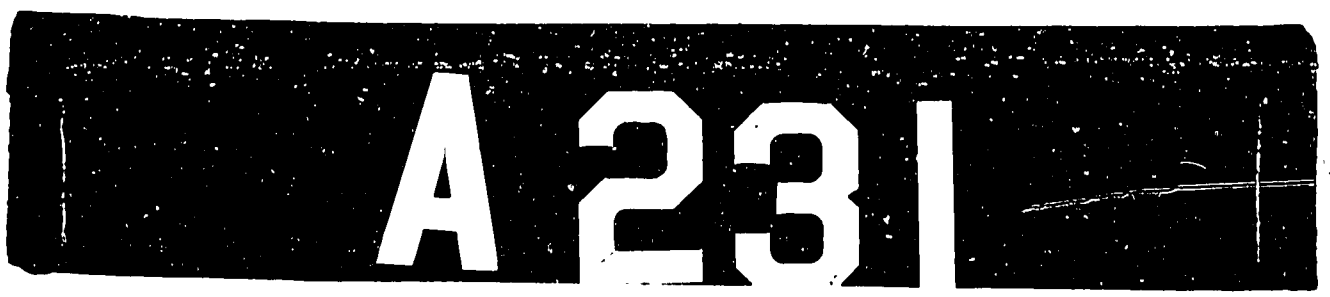

This page intentionally left blank.

WAS D2109-A, D2119-A, D2159-B

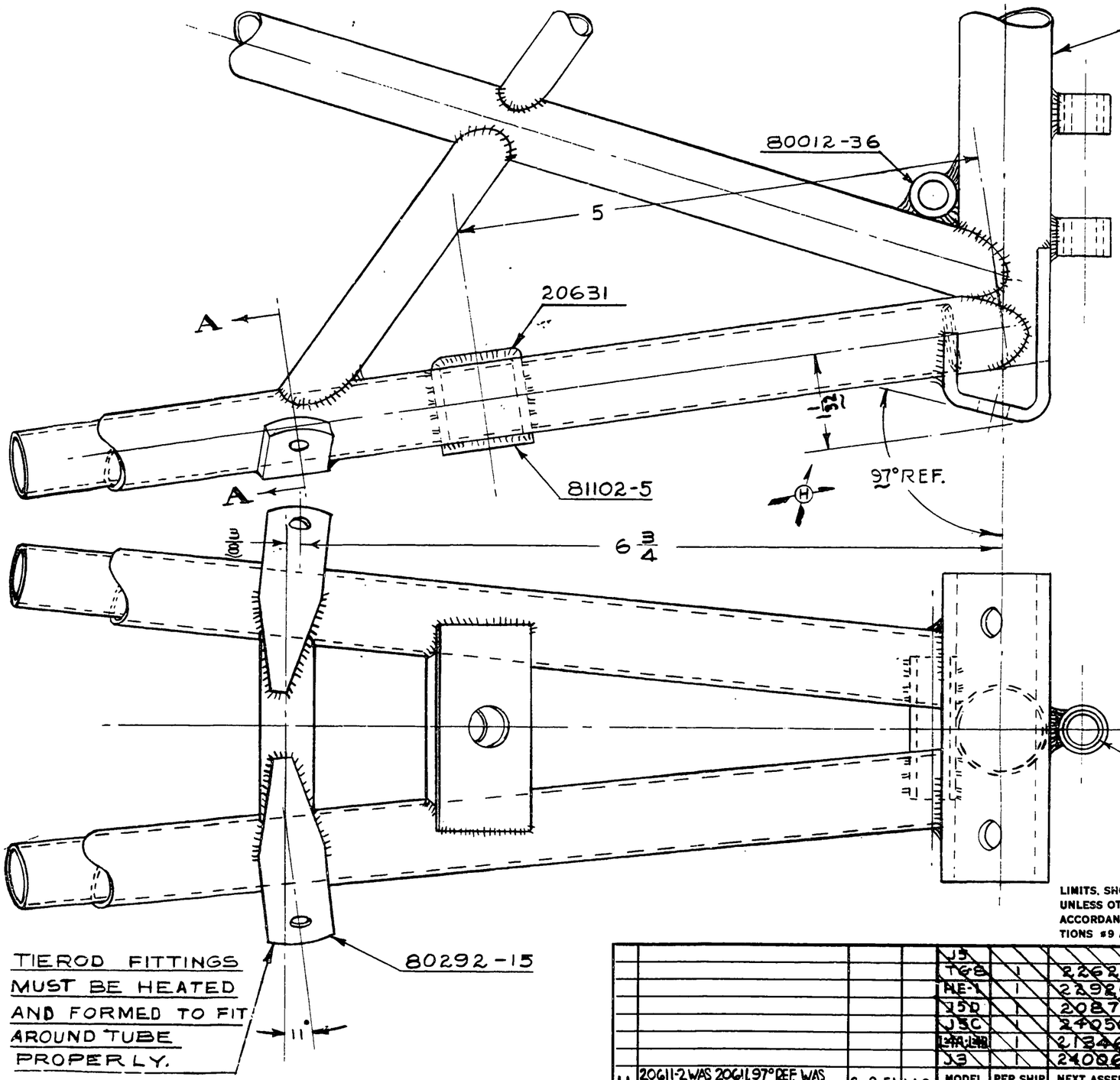

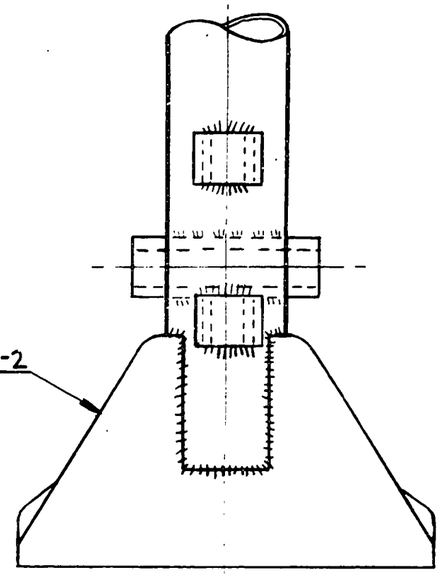

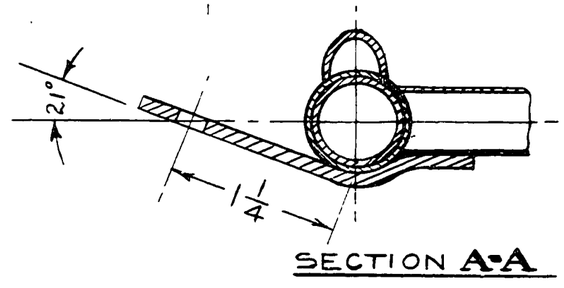

LIMITS, SHOP PRACTICES AND FINISH. UNLESS OTHERWISE NOTED, TO BE IN ACCORDANCE WITH PIPER SPECIFICATIONS #9 AND #10.

PART No.	No. REQ.	NAME / MATERIAL
80022-45	2	BUSHING
20631	1	"U" FITTING
80012-36	1	JIG HANGER BUSHING
80292-15	2	TIEROD FITTING
81102-5	1	FITTING PLATE
20611-2	1	FITTING

LET.	REVISION	DATE	BY
H	20611-2 WAS 20611 97° REF WAS 104° REF. & 1 11/32 WAS 1 5/16	3-9-51	M.G.
G	REDRAWN, NO CHANGE	3-3-44	I.D.B.

MODEL	PER SHIP	NEXT ASSEMBLY	SUPERSEDES	SUP. BY
J5				
J5B	1	22626		
J5-1	1	22986		
J5D	1	20873		
J5C	1	24056		
J5A-J5B	1	21346		
J3	1	24086		

SCALE FULL SIZE — TOTAL WT.- LBS.
FINISH

FITTINGS INSTALLATION - FUSELAGE TAIL

PIPER AIRCRAFT CORP.
LOCK HAVEN, PENNA.

DRAWN	CHECKED	APPROVED
I. BARNARD 3-3-44	C.K. 3-9-44	

20642

613

A613

WAS J3-250

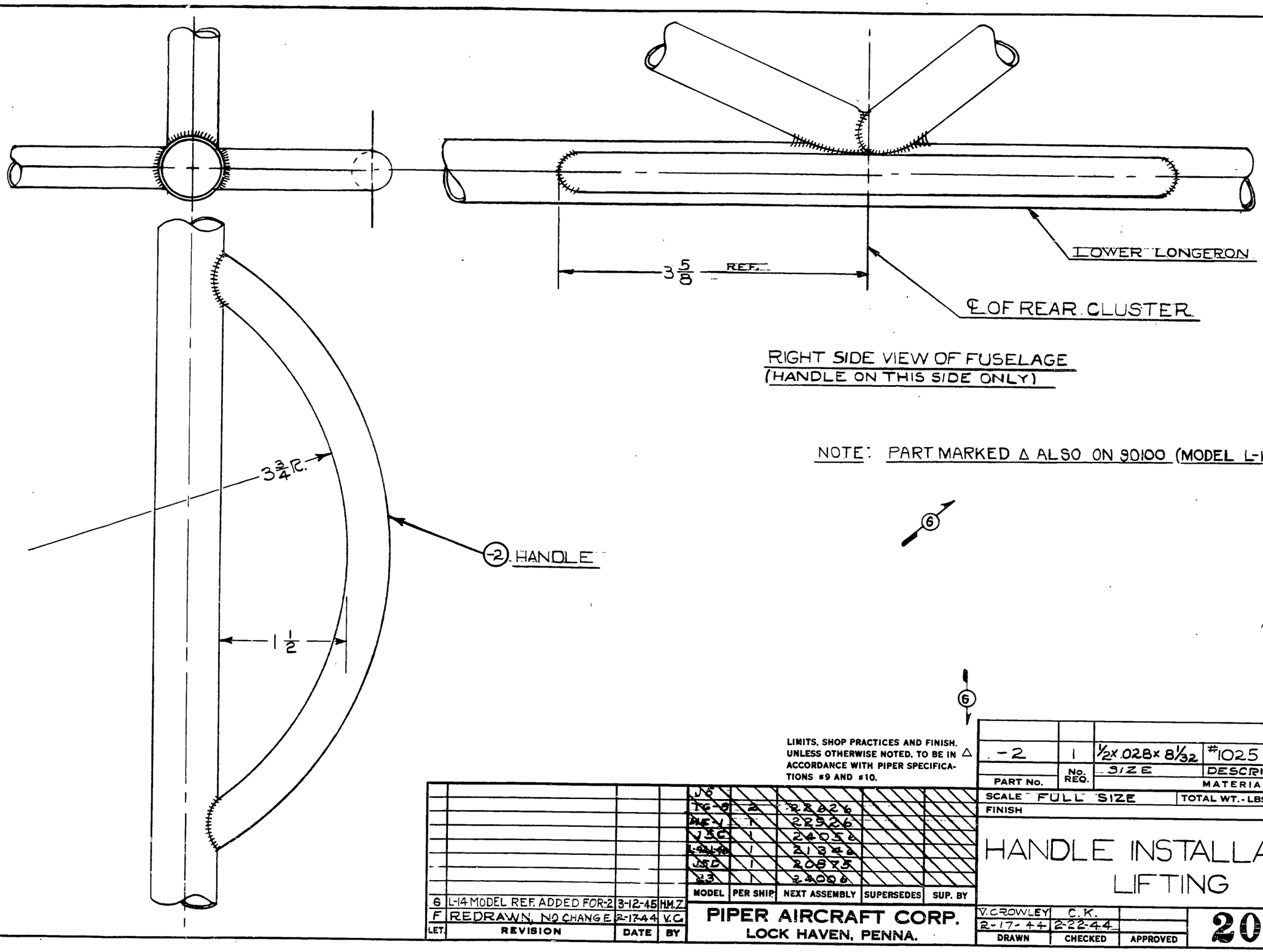

RIGHT SIDE VIEW OF FUSELAGE
(HANDLE ON THIS SIDE ONLY)

NOTE: PART MARKED △ ALSO ON 90100 (MODEL L-14)

LIMITS, SHOP PRACTICES AND FINISH, UNLESS OTHERWISE NOTED, TO BE IN ACCORDANCE WITH PIPER SPECIFICATIONS #9 AND #10. △

LET.	REVISION	DATE	BY
6	L-14 MODEL REF. ADDED FOR -2	3-12-45	H.M.Z.
F	REDRAWN, NO CHANGE	2-17-44	V.C.

MODEL	PER SHIP	NEXT ASSEMBLY	SUPERSEDES	SUP. BY
J5				
TG-9	2	22826		
AE-1	1	22826		
J5C	1	24056		
L-14	1	21344		
J5D	1	20875		
#3	1	24006		

PIPER AIRCRAFT CORP.
LOCK HAVEN, PENNA.

PART No.	NO. REQ.	SIZE	MATERIAL
-2	1	1/2 x .028 x 8 1/32	#1025 STEEL

SCALE FULL SIZE — TOTAL WT.-LBS.
FINISH

HANDLE INSTALLATION — LIFTING

DRAWN	CHECKED	APPROVED
V. CROWLEY 2-17-44	C.K. 2-22-44	

20652

614

A614

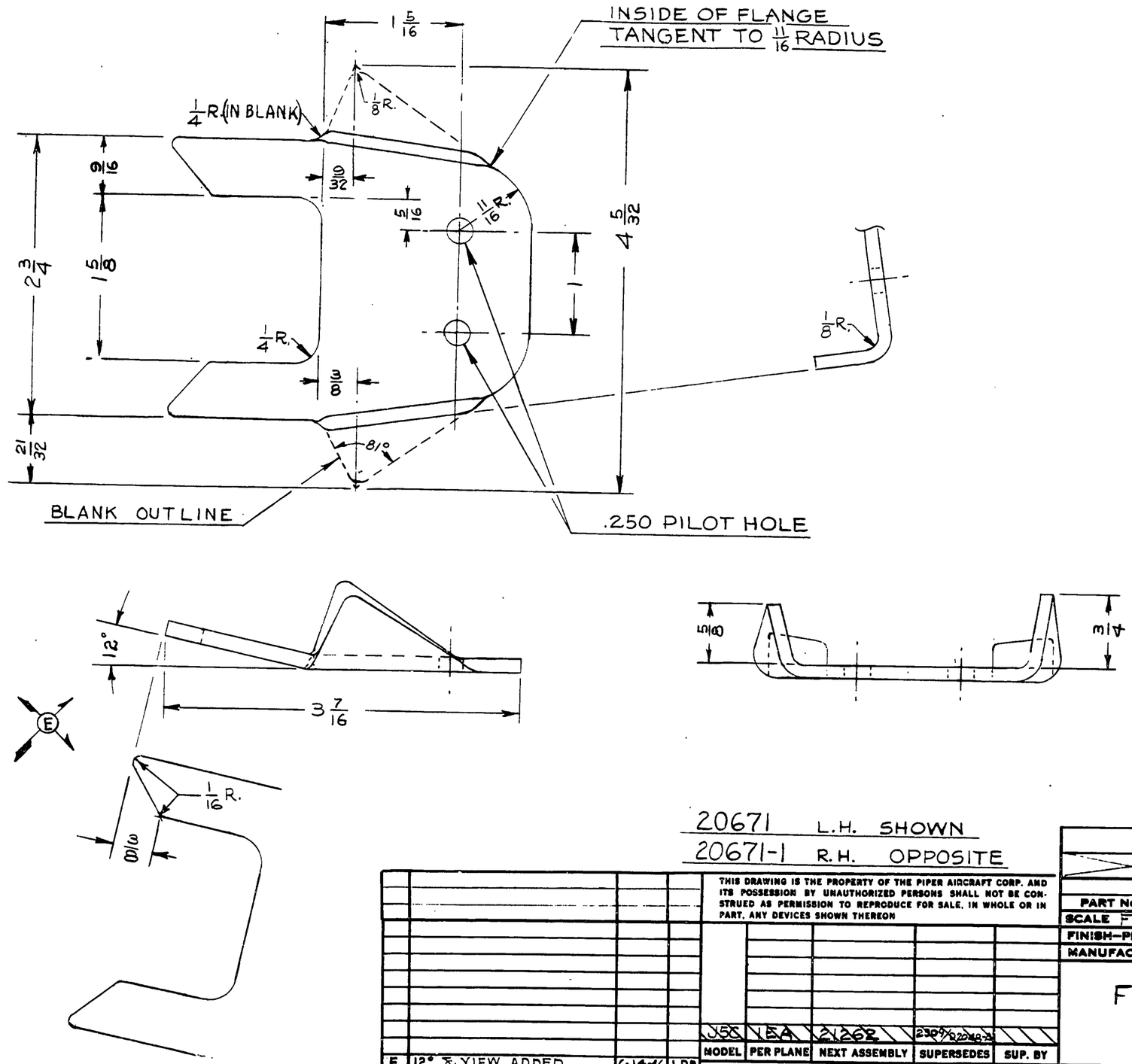

20671 L.H. SHOWN
20671-1 R.H. OPPOSITE

PART No.	No. REQ.	SIZE	DESCRIPTION
		.125 x 3 7/16 x 4 5/32	#1025 SH. STEEL

MATERIAL

SCALE FULL SIZE — TOTAL WT.—LBS.

FINISH—PIPER SPECIFICATION #10

MANUFACTURING PRACTICES—PIPER SPECIFICATION #9

FITTING - FUSELAGE LIFT STRUT

MODEL	PER PLANE	NEXT ASSEMBLY	SUPERSEDES	SUP. BY
J5C	1EA	21262	2309/D20483-3	

LET.	REVISION	DATE	BY
E	12° & VIEW ADDED	6-14-46	I.D.B.
D	REDRAWN & REVISED	3-19-46	C.E.K.

THIS DRAWING IS THE PROPERTY OF THE PIPER AIRCRAFT CORP. AND ITS POSSESSION BY UNAUTHORIZED PERSONS SHALL NOT BE CONSTRUED AS PERMISSION TO REPRODUCE FOR SALE, IN WHOLE OR IN PART, ANY DEVICES SHOWN THEREON

PIPER AIRCRAFT CORP.
LOCK HAVEN, PENNA.

DRAFTSMAN	CHECKER	STANDARDS
C.E.K. 3-19-46	E.E.T. 3-20-46	

20671

615

A615

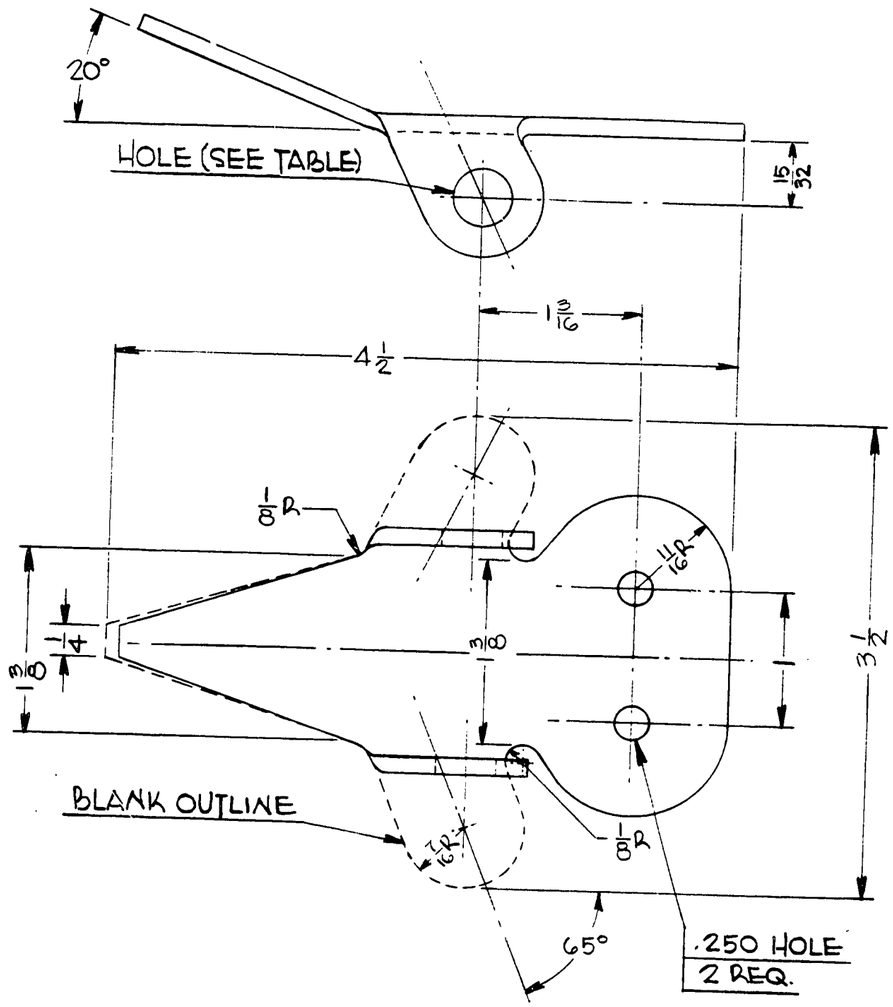

PART NO.	HOLE
20681	7/16
20681-2	.516

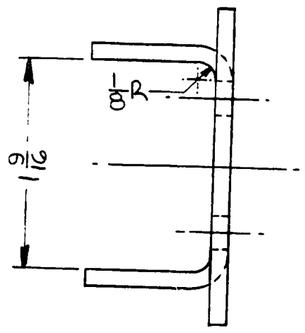

LET	REVISION	DATE	BY
C	REDRAWN & REVISED	6-20-51	M.G

MODEL	PER PLANE	NEXT ASSEMBLY	SUPERSEDES	SUP. BY

THIS DRAWING IS THE PROPERTY OF THE PIPER AIRCRAFT CORP. AND ITS POSSESSION BY UNAUTHORIZED PERSONS SHALL NOT BE CONSTRUED AS PERMISSION TO REPRODUCE FOR SALE IN WHOLE OR IN PART ANY DEVICES SHOWN THEREON.

PIPER AIRCRAFT CORP.
LOCK HAVEN, PENNA.

PART NO.	NO. REQ.	SIZE	DESCRIPTION / MATERIAL
		.125×3½×4½	#1025 STEEL

SCALE FULL SIZE — TOTAL WT.—LBS.

FINISH—PIPER SPECIFICATION # 10

MANUFACTURING PRACTICES—PIPER SPECIFICATION # 9

FITTING - FUSELAGE REAR LANDING GEAR

DRAFTSMAN	CHECKER	STANDARDS
M.W.G. 6-20-51	H. R. K. 6-22-51	

20681

6/6

A6/6

WAS 2254
D2040-A

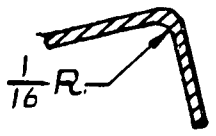

SECTION "A-A"

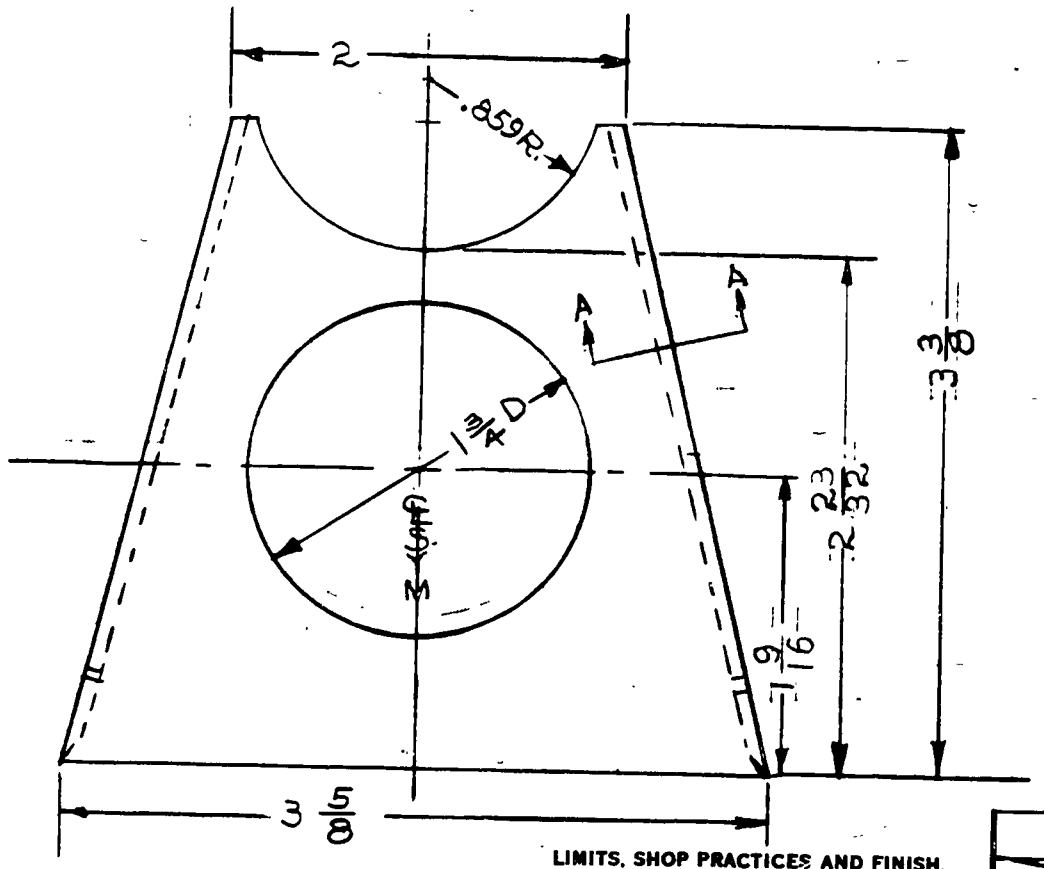

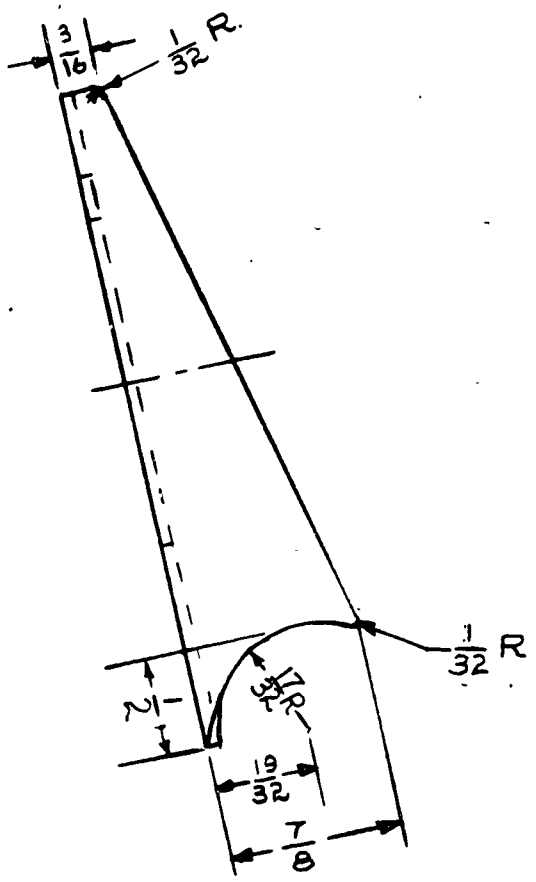

LIMITS, SHOP PRACTICES AND FINISH. UNLESS OTHERWISE NOTED, TO BE IN ACCORDANCE WITH PIPER SPECIFICATIONS #9 AND #10.

PART No.	NO. REQ.	SIZE	DESCRIPTION
		.062 x 3 3/8 x 5	#1025 STEEL
			MATERIAL

SCALE FULL SIZE — TOTAL WT.-LBS.
FINISH

BRACKET—TORQUE TUBE REAR BEARING

MODEL	PER SHIP	NEXT ASSEMBLY	SUPERSEDES	SUP. BY
J5 HEI	1	20751		
J5 J5C	1	20751		
L-4B	1	20751		
J3L-4A	1	20751		
J5-C	2	20751	22801	

LET.	REVISION	DATE	BY
E	REDRAWN NO CHANGE	2-17-44	V.C.

PIPER AIRCRAFT CORP.
LOCK HAVEN, PENNA.

DRAWN	CHECKED	APPROVED
V.C. CROWLEY 2-17-44	C. K. 2-22-44	

20741

232

A 232

WAS A278 / D2129-B

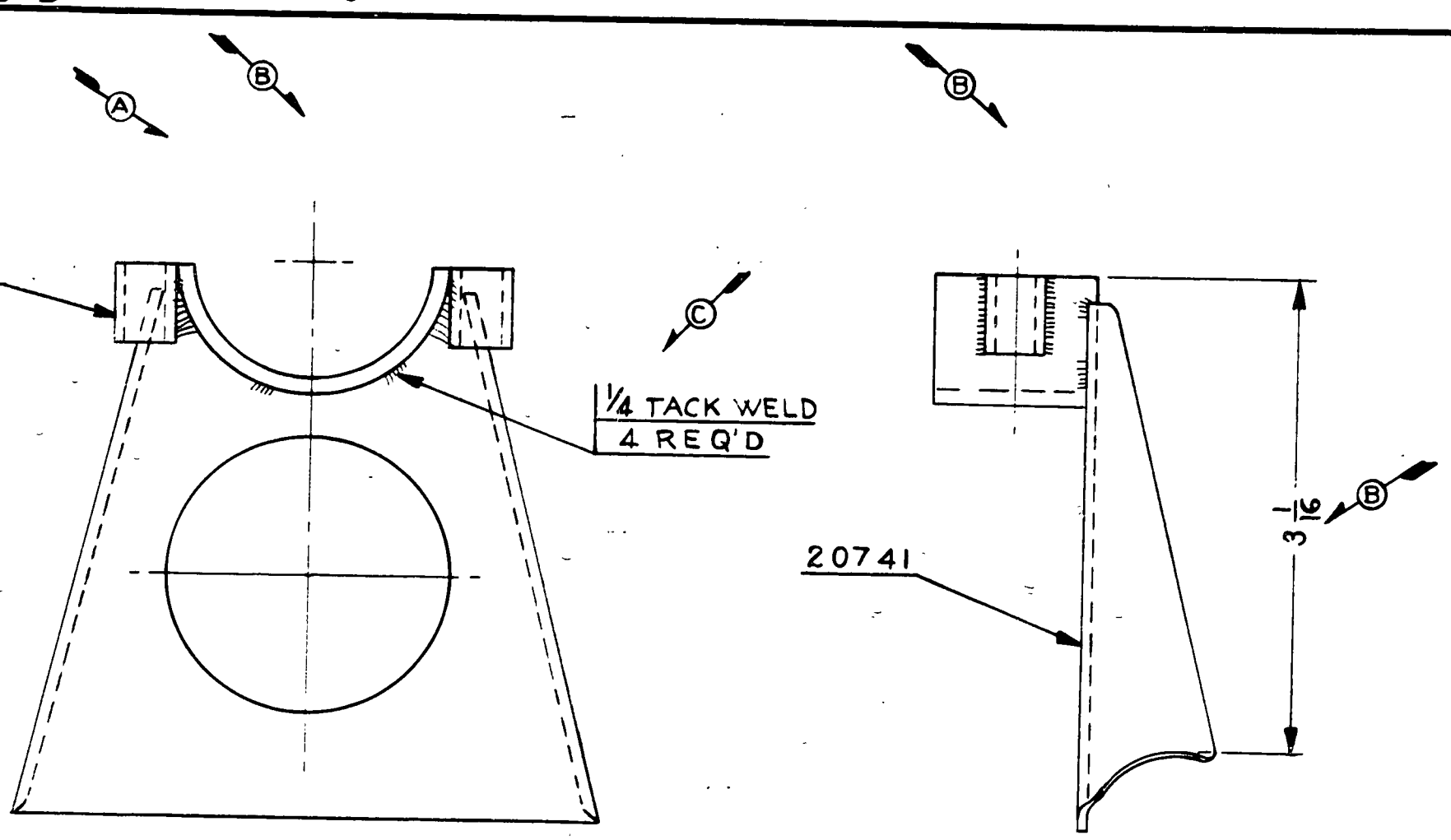

21811-2	1	LOWER BEARING ASSY.	
20741	1	BRACKET	
PART NO.	NO. REQ.	NAME / MATERIAL	

SCALE FULL SIZE | TOTAL WT.—LBS.

FINISH—PIPER SPECIFICATION # 10

MANUFACTURING PRACTICES—PIPER SPECIFICATION # 9

MODEL	PER PLANE	NEXT ASSEMBLY	SUPERSEDES	SUP. BY
TG-8	1	22614		
J5C,HE-1	1	21792		
E4A,E4B	1	20892		
J3	1	20992		
J8,J5C	1	21792		

LET	REVISION	DATE	BY
E	REDRAWN WITHOUT CHANGE	6-20-51	C.K.
D	21811-3 REMOVED	3-19-46	HMZ
C	WELDING REVISED	8-6-43	J.E.C.
B	OIL HOLE & 3 1/16 DIM. ADDED	4-12-43	C.K.
A	PART 21811-3 ADDED	10-22-42	C.E.K.

THIS DRAWING IS THE PROPERTY OF THE PIPER AIRCRAFT CORP. AND ITS POSSESSION BY UNAUTHORIZED PERSONS SHALL NOT BE CONSTRUED AS PERMISSION TO REPRODUCE FOR SALE IN WHOLE OR IN PART ANY DEVICES SHOWN THEREON.

PIPER AIRCRAFT CORP.
LOCK HAVEN, PENNA.

BRACKET ASSEMBLY-TORQUE TUBE REAR BEARING

DRAFTSMAN	CHECKER	STANDARDS	
W. N. Emery 8-11-41	V. F. 8-22-41		20751

233

A233

WAS 2661 / D2225-A

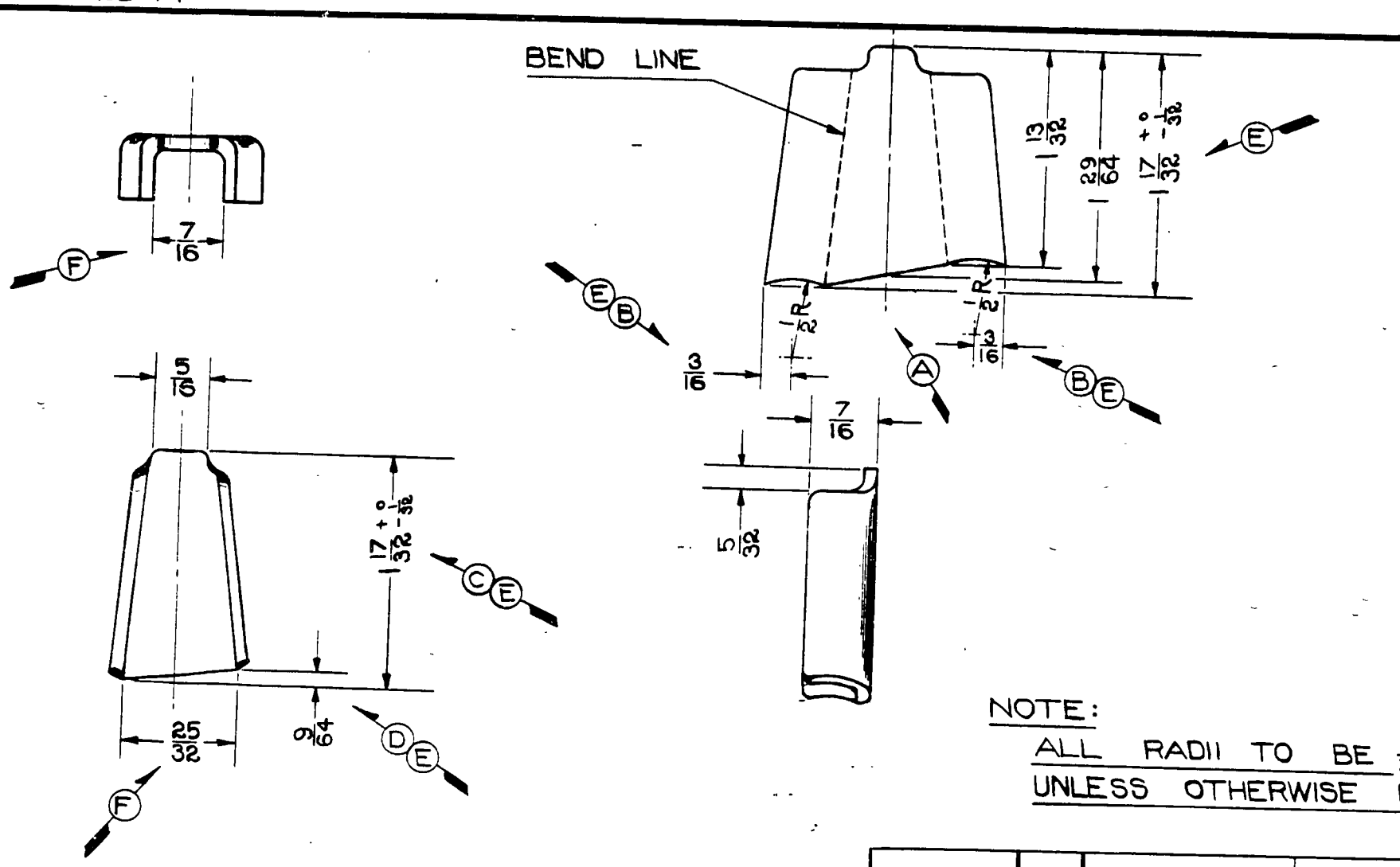

NOTE:
ALL RADII TO BE 3/32
UNLESS OTHERWISE NOTED

20831 L.H. SHOWN
20831-1 R.H. BENT OPPOSITELY

LET.	REVISION	DATE	BY
G	REDRAWN WITHOUT CHANGE	4-28-44	V.P.
F	7/16 WAS 5/8; 25/32 WAS 15/16	5-23-43	H.J.G
E	DIMENSIONS REVISED	5-28-43	C.E.K.
D	10° REM'D. & 1/8 ADDED	12-30-42	M.G.S.
C	1 1/2 REM'D. & 1 9/16 ADDED	12-30-42	M.G.S.
B	5/16 & 5/32 DIM. ADDED	12-30-42	M.G.S.
A	DIMENSIONS REMOVED	2-17-42	C.E.V.

MODEL	PER PLANE	NEXT ASSEMBLY	SUPERSEDES	SUP. BY
TG-8	1 EA.	20841		
HE-1	1 EA.	20841		
J5D	1 EA.	20841		
L4A	1 EA.	20841		
L4B	1 EA.	20841		
J3	1 EA.	20841		
J5C	1 EA.	20841		

PENCILTEX A. & B. SMITH CO., PGH., PA.

PIPER AIRCRAFT CORP.
LOCK HAVEN, PENNA.

PART No.	No. REQ.	SIZE	DESCRIPTION
		.095×1 9/16×1 9/16	*1025 STEEL.
		MATERIAL	

SCALE FULL SIZE — TOTAL WT.—LBS.
FINISH—PIPER SPECIFICATION #10
MANUFACTURING PRACTICES—PIPER SPECIFICATION #3

BRACKET-TORQUE TUBE STOP

DRAFTSMAN	CHECKER	STANDARDS
R.C.M. 8-13-41	R.R.B 8-14-41	

20831

234

A234

WAS 2036
D2226A.

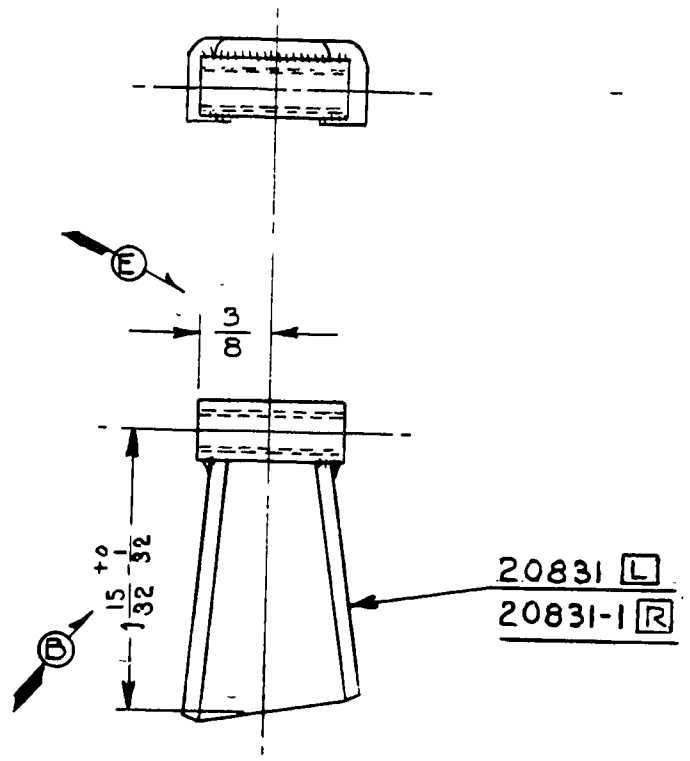

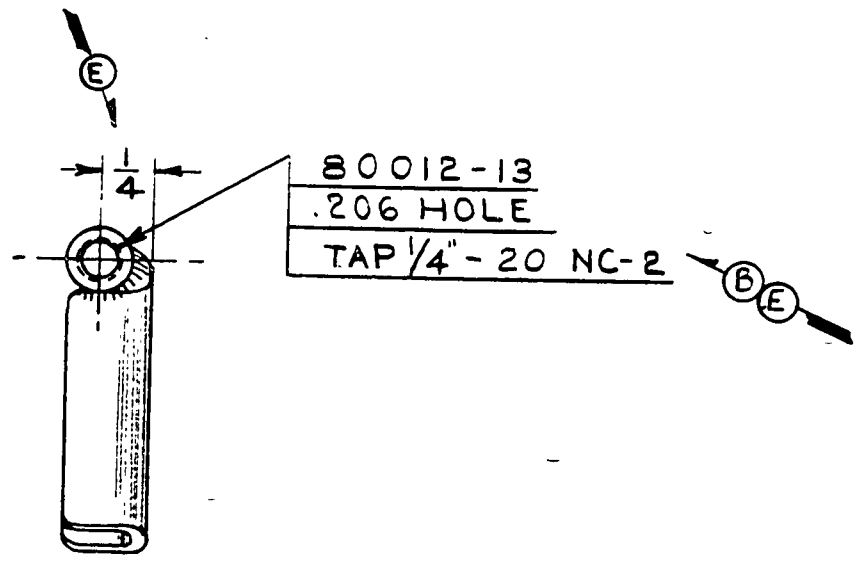

C

PARTS MARKED L USED ON LEFT ASSY. ONLY

PARTS MARKED R USED ON RIGHT ASSY. ONLY

20841 L.H. SHOWN
20841-1 R.H. OPPOSITE

PART NO.	NO. REQ.	NAME / MATERIAL
80012-13	1	BUSHING
20831-1	1	BRACKET
20831	1	BRACKET

SCALE FULL SIZE | TOTAL WT.—LBS.

FINISH—PIPER SPECIFICATION # 10

MANUFACTURING PRACTICES—PIPER SPECIFICATION # 9

MODEL	PER PLANE	NEXT ASSEMBLY	SUPERSEDES	SUP. BY
HE-1	1 EA	20851		
L-4B	1 EA	20851		
J5C, J5D	1 EA	20851		
J5A, J5B	1 EA	20851		
J5J, J5	1 EA	20851		

LET	REVISION	DATE	BY
F	REDRAWN WITHOUT CHANGE	5-28-51	I.M.M.
E	DIM. & NOTE REVISED; 1/4 ADDED	5-23-43	R.R.F.
D	1 15/32 ± 1/32 WAS 1 1/2 ± 1/32	4-3-43	C.E.K.
C	NOTE ADDED	3-3-43	M.G.S.
B	#5 DRILL WAS #7	11-13-42	C.E.K.
A	"ASSY." ADDED TO TITLE	10-8-42	C.E.K.

THIS DRAWING IS THE PROPERTY OF THE PIPER AIRCRAFT CORP. AND ITS POSSESSION BY UNAUTHORIZED PERSONS SHALL NOT BE CONSTRUED AS PERMISSION TO REPRODUCE FOR SALE IN WHOLE OR IN PART ANY DEVICES SHOWN THEREON.

PIPER AIRCRAFT CORP.
LOCK HAVEN, PENNA.

STOP ASSEMBLY — TORQUE TUBE

R.C.M.	R.R.B.		
8-13-41	8-15-41		
DRAFTSMAN	CHECKER	STANDARDS	20841

235

A 235

WAS D2014-A

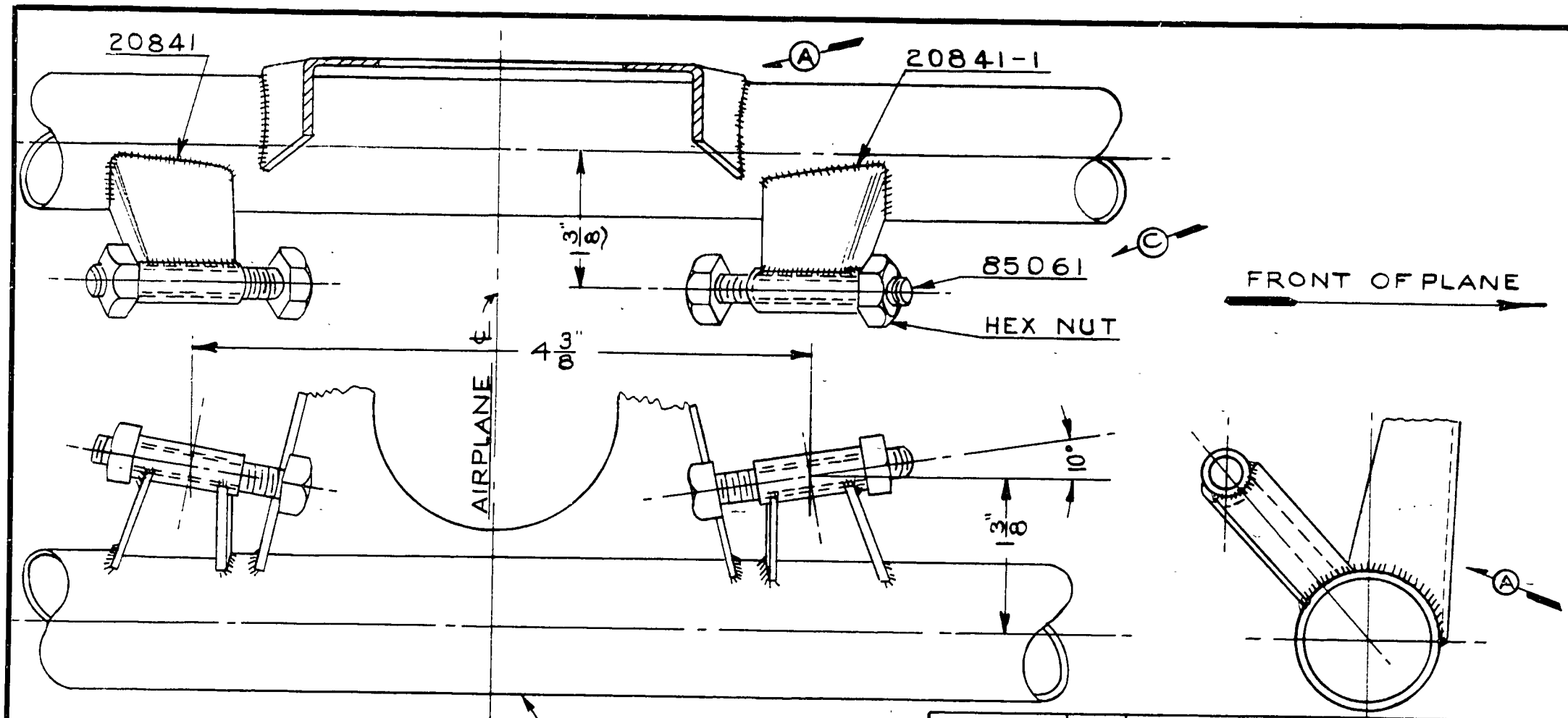

	2	1/4"-20 THD. HEX. NUT
85061	2	CAPSCREW (SPECIAL)
20841-1	1	STOP
20841	1	STOP
PART NO.	NO. REQ.	NAME / MATERIAL

SCALE FULL SIZE | TOTAL WT.—LBS.

FINISH—PIPER SPECIFICATION # 10

MANUFACTURING PRACTICES—PIPER SPECIFICATION # 9

STOP INSTALLATION— TORQUE TUBE

MODEL	PER PLANE	NEXT ASSEMBLY	SUPERSEDES	SUP. BY
J5				
TG-8	1	22626		
HE-1	1	22926		
J5C	1	24056		
L4A,L4B	1	21346		
J5D	1	20875		
J3	1	24006		

LET	REVISION	DATE	BY
E	REDRAWN WITHOUT CHANGE	5-28-51	I.M.M.
D	J5C NEXT ASSY. 24056 WAS 20875	11-4-43	A.H.
C	85061 WAS 1/4-20 BOLT	10-8-43	C.E.K.
B	J5C NEXT ASSY 24006 WAS 21346	9-15-43	M.G.S.
A	TOP & END VIEW REVISED	6-10-43	R.R.F.

THIS DRAWING IS THE PROPERTY OF THE PIPER AIRCRAFT CORP. AND ITS POSSESSION BY UNAUTHORIZED PERSONS SHALL NOT BE CONSTRUED AS PERMISSION TO REPRODUCE FOR SALE IN WHOLE OR IN PART ANY DEVICES SHOWN THEREON.

PIPER AIRCRAFT CORP.
LOCK HAVEN, PENNA.

R. C. M.	R. R. B		
8-13-41	8-14-41		**20851**
DRAFTSMAN	CHECKER	STANDARDS	

236

A 236

WAS J3-A200 & 21761

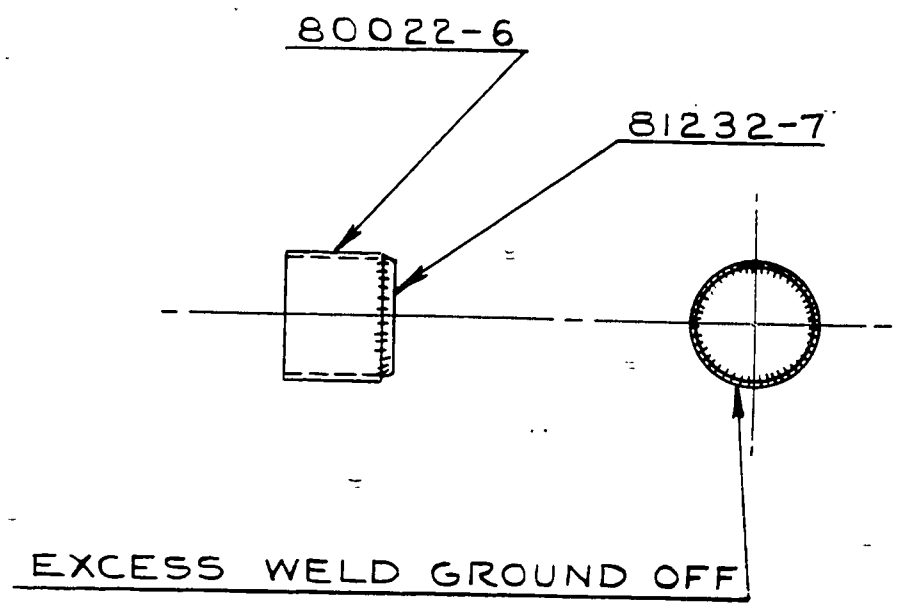

PART NO.	NO. REQ.	NAME / MATERIAL
81232-7	1	DISC
80022-6	1	BUSHING

SCALE FULL SIZE | TOTAL WT.—LBS.

FINISH—PIPER SPECIFICATION # 10

MANUFACTURING PRACTICES—PIPER SPECIFICATION # 9

CUP ASS'Y.—LONGERON SEAL

B

MODEL	PER PLANE	NEXT ASSEMBLY	SUPERSEDES	SUP. BY
TG-8	2	21752		
L-4B	2	21752		
L-4A	2	21752		
J8	8	21752		

THIS DRAWING IS THE PROPERTY OF THE PIPER AIRCRAFT CORP. AND ITS POSSESSION BY UNAUTHORIZED PERSONS SHALL NOT BE CONSTRUED AS PERMISSION TO REPRODUCE FOR SALE IN WHOLE OR IN PART ANY DEVICES SHOWN THEREON.

LET	REVISION	DATE	BY
C	REDRAWN WITHOUT CHANGE	6-20-51	I.M.M.
B	"ASSY." ADDED TO TITLE	10-8-42	C.E.K
A	DRAWING NO. WAS 21761	6-11-42	M.G.S

PIPER AIRCRAFT CORP.
LOCK HAVEN, PENNA.

DRAFTSMAN	CHECKER	STANDARDS
W.N. EMREY 12-11-41	R.C.M. 12-30-41	

20911

237

A237

WAS E2-2010

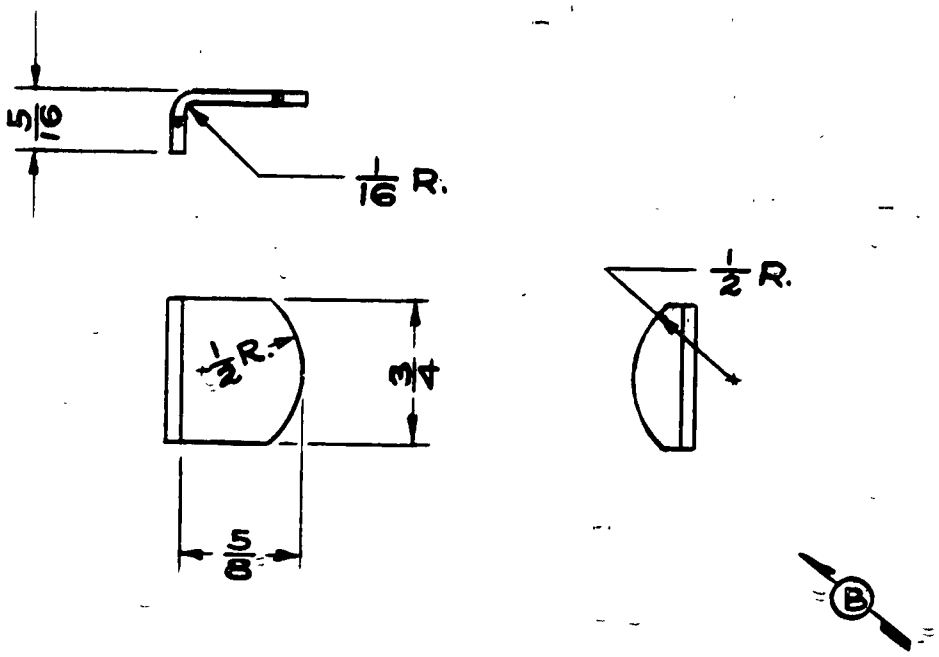

				MODEL	PER PLANE	NEXT ASSEMBLY	SUPERSEDES	SUP. BY
				TG-B	2	21752		
				L-4B	2	21752		
				L-4A	2	21752		
				J3	2	21752		
C	REDRAWN WITHOUT CHANGE	4-27-44	V.P.					
B	SIDE VIEW ADDED	5-29-43	C.E.K					
A	7/8 DIM. REMOVED	3-23-43	C.K.					
LET.	REVISION	DATE	BY					

PENCILTEX A. B B. SMITH CO., PGH., PA.

PIPER AIRCRAFT CORP.
LOCK HAVEN, PENNA.

PART No.	No. REQ.	SIZE	DESCRIPTION
		.062 X 3/4 X 7/8	#1025 STEEL
		MATERIAL	

SCALE FULL SIZE — TOTAL WT.—LBS.

FINISH—PIPER SPECIFICATION #10

MANUFACTURING PRACTICES—PIPER SPECIFICATION #9

STOP - FUSELAGE DOOR

R.C.M.	R.R.B.		
10-3-41	10-6-41		20921
DRAFTSMAN	CHECKER	STANDARDS	

238

A 238

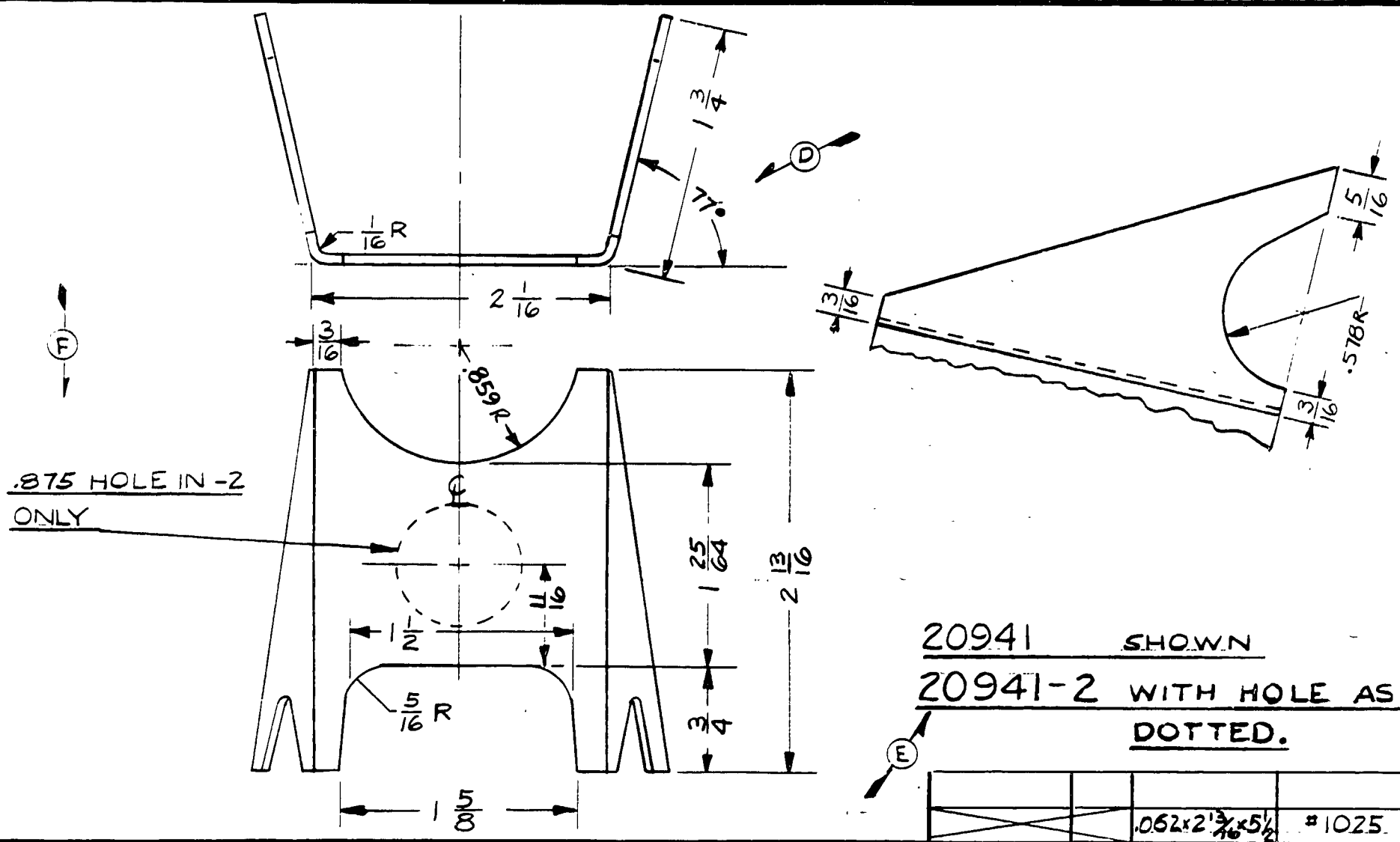

		.062x2 13/16x5 1/2	#1025 STEEL
		SIZE	DESCRIPTION
PART NO.	NO. REQ.	MATERIAL	

SCALE FULL SIZE — TOTAL WT.—LBS.

FINISH—PIPER SPECIFICATION # 10

MANUFACTURING PRACTICES—PIPER SPECIFICATION # 9

MODEL	PER PLANE	NEXT ASSEMBLY	SUPERSEDES	SUP. BY
L-4B	1	20981		
L-4A	1	20981		
J-3	1	20981		

BRACKET – TORQUE TUBE FRONT BEARING

LET	REVISION	DATE	BY
G	REDRAWN WITHOUT CHNG.	6-20-51	C.B.
F	.875 HOLE WAS .937 HOLE	12-20-49	K.D.
E	-2 ADDED	2-5-49	R.M.
D	3/16 & 2 13/16 REM., 11° ADDED	11-1-46	I.D.B.
C	REDRAW & REVISED	7-7-43	I.D.B.

THIS DRAWING IS THE PROPERTY OF THE PIPER AIRCRAFT CORP. AND ITS POSSESSION BY UNAUTHORIZED PERSONS SHALL NOT BE CONSTRUED AS PERMISSION TO REPRODUCE FOR SALE IN WHOLE OR IN PART ANY DEVICES SHOWN THEREON.

PIPER AIRCRAFT CORP.
LOCK HAVEN, PENNA.

DRAFTSMAN	CHECKER	STANDARDS	
I. BARNARD 7-7-43	L.E.K. 7-12-43		20941

D

239

A 239

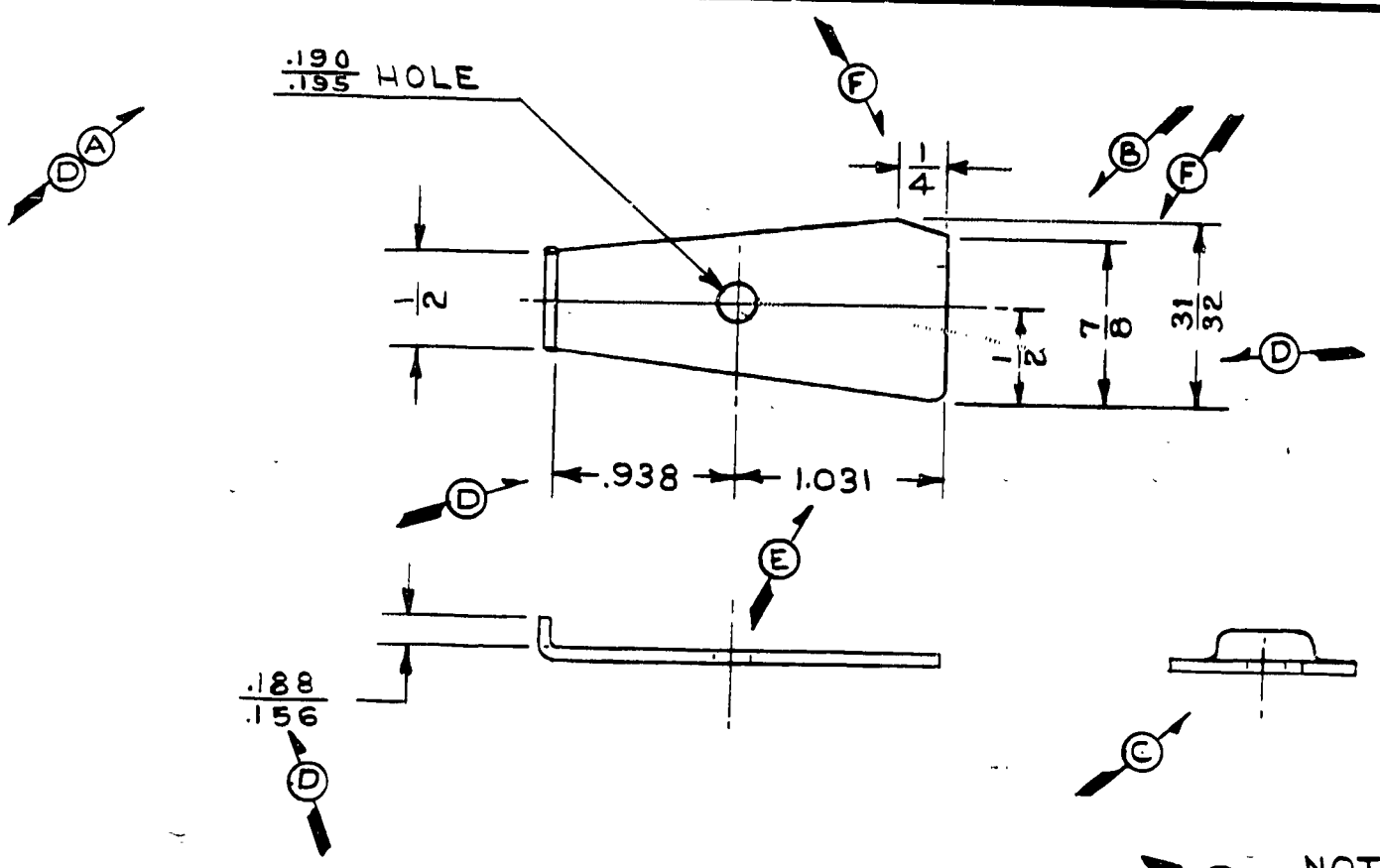

20951 L.H. SHOWN
20951-1 R.H. BENT OPP.

NOTE:
1. ALL RADII 1/16 UNLESS OTHERWISE NOTED.

LET	REVISION	DATE	BY
G	REDRAWN WITHOUT CHANGE	5-29-51	I.M.M.
F	7/8 WAS 21/32; 1/4 WAS 5/16	6-11-43	C.E.K.
E	2 REMOVED, 1.031 ADDED	6-11-43	C.E.K.
D	DIM'S. REVISED	5-14-43	C.E.K.
C	NOTE 1. & VIEW ADDED	4-29-43	H.R.K.
B	5/16 WAS 1/8	4-29-43	H.R.K.
A	WAS .191 HOLE	3-3-43	J.E.C.

MODEL	PER PLANE	NEXT ASSEMBLY	SUPERSEDES	SUP. BY
TG-8	1L. 1R.	20972		
L-4B	1L. 1R.	20972		
L-4A	1L. 1R.	20972		
J3	1L. 1R.	20972		

THIS DRAWING IS THE PROPERTY OF THE PIPER AIRCRAFT CORP. AND ITS POSSESSION BY UNAUTHORIZED PERSONS SHALL NOT BE CONSTRUED AS PERMISSION TO REPRODUCE FOR SALE IN WHOLE OR IN PART ANY DEVICES SHOWN THEREON.

PIPER AIRCRAFT CORP.
LOCK HAVEN, PENNA.

PART NO.	NO. REQ.	SIZE	DESCRIPTION / MATERIAL
		.062×1×2 3/16	#1025 STEEL

SCALE FULL SIZE | TOTAL WT.—LBS.
FINISH—PIPER SPECIFICATION # 10
MANUFACTURING PRACTICES—PIPER SPECIFICATION # 9

PLATE—FUSELAGE AILERON PULLEY HOUSING

DRAFTSMAN	CHECKER	STANDARDS
F. B. 10-9-41	R.C.M. 10-14-41	

20951

A240

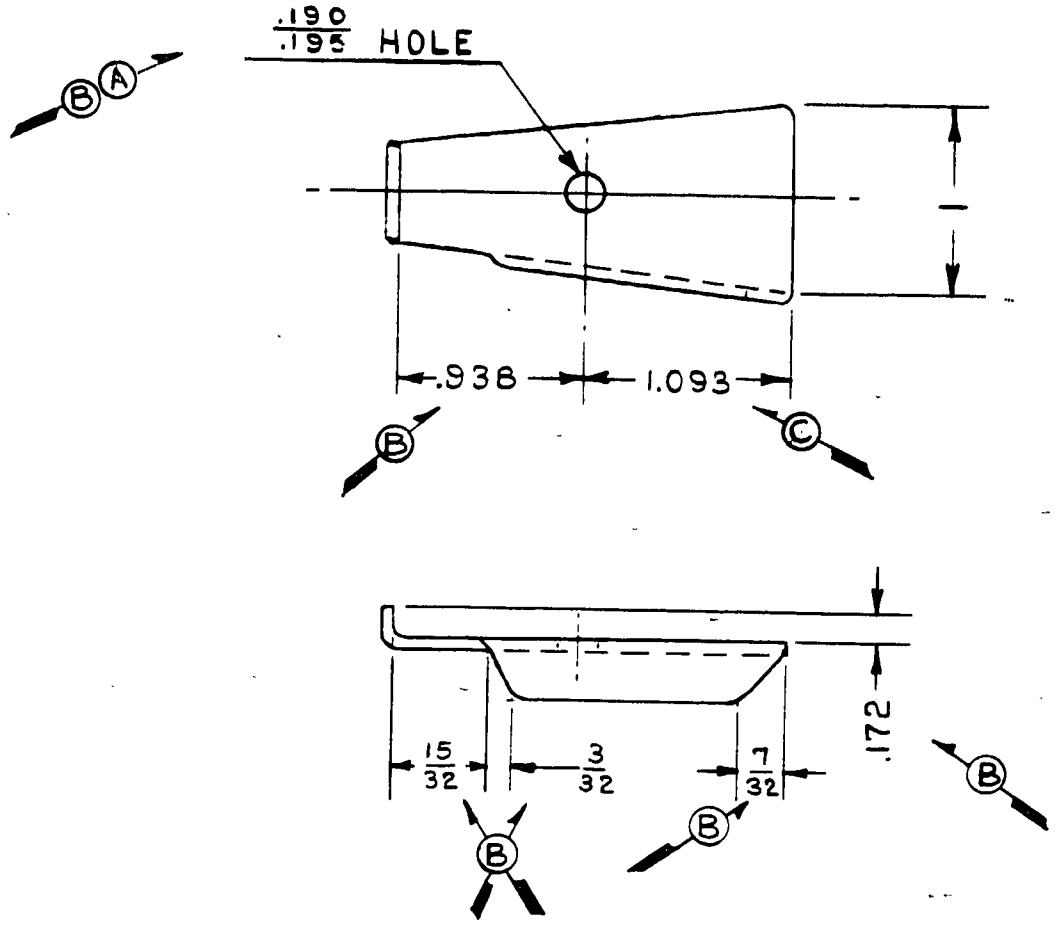

20961 L.H. SHOWN
20961-1 R.H. BENT OPP.

NOTE: ALL RADII TO BE 1/16 UNLESS OTHERWISE NOTED.

MODEL	PER PLANE	NEXT ASSEMBLY	SUPERSEDES	SUP. BY
T6-8	1R.1L.	20972		
L-4B	1R 1L.	20972		
L-4A	1R.1L.	20972		
J3	1R.1L.	20972		

LET	REVISION	DATE	BY
D	REDRAWN WITHOUT CHANGE	5-29-51	I.M.M.
C	2 REMOVED; 1.093 ADDED	6-11-43	C.E.K.
B	DIM'S. REVISED; NOTE ADDED	5-14-43	C.E.K.
A	WAS .191 HOLE	3-4-43	J.E.C.

THIS DRAWING IS THE PROPERTY OF THE PIPER AIRCRAFT CORP. AND ITS POSSESSION BY UNAUTHORIZED PERSONS SHALL NOT BE CONSTRUED AS PERMISSION TO REPRODUCE FOR SALE IN WHOLE OR IN PART ANY DEVICES SHOWN THEREON.

PIPER AIRCRAFT CORP.
LOCK HAVEN, PENNA.

PART NO.	NO. REQ.	SIZE	MATERIAL
		.062×1 1/4×2 1/4	#1025 STEEL

DESCRIPTION

SCALE FULL SIZE | TOTAL WT.—LBS.

FINISH—PIPER SPECIFICATION # 10

MANUFACTURING PRACTICES—PIPER SPECIFICATION # 9

PLATE—FUSELAGE AILERON PULLEY HOUSING FLANGED

DRAFTSMAN	CHECKER	STANDARDS
F. B. 10-9-41	R.C.M. 10-14-41	

20961

241

A241

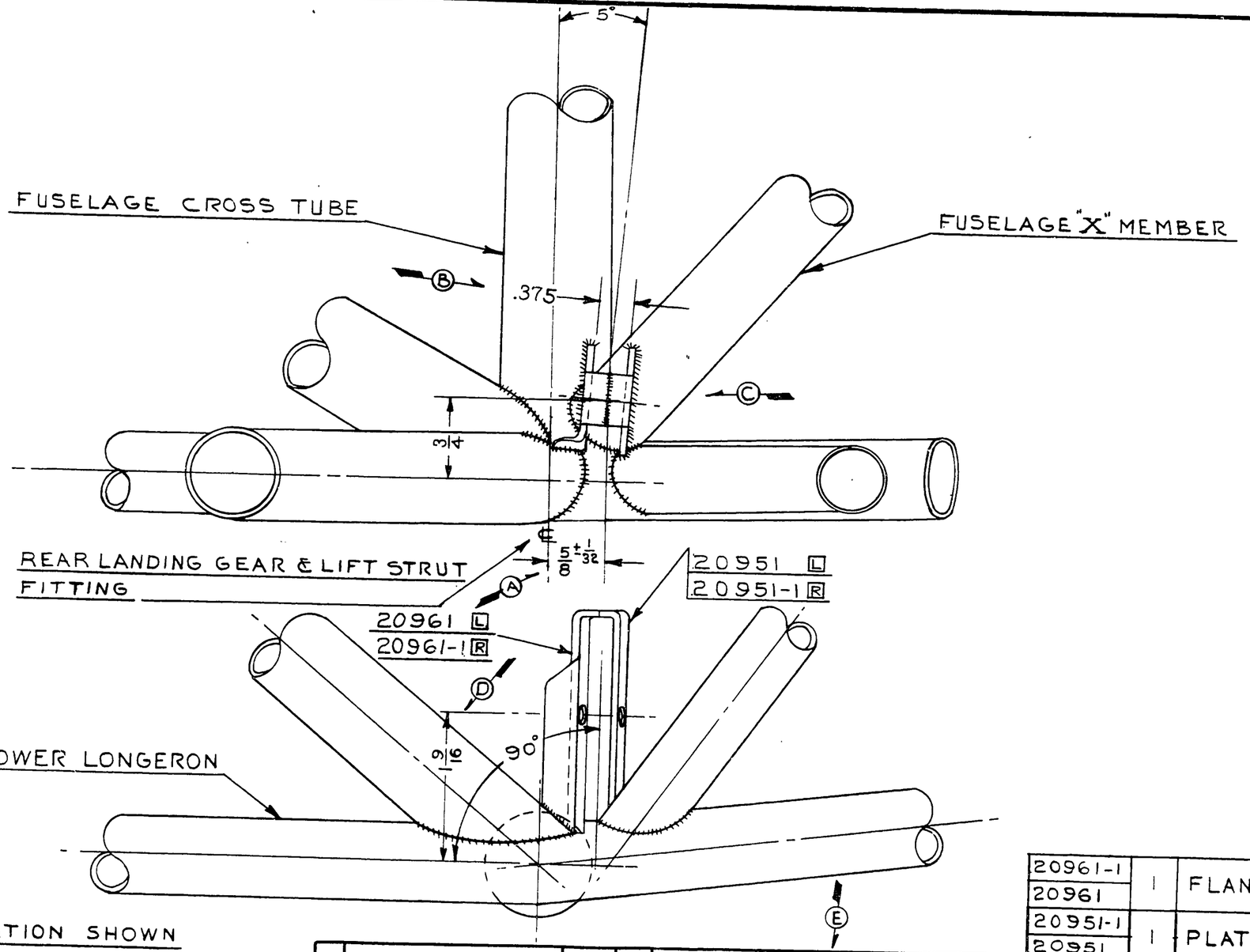

LEFT INSTALLATION SHOWN

NOTE: PARTS MARKED L USED ON L.H. INSTALL. ONLY.
PARTS MARKED R USED ON R.H. INSTALL. ONLY.

LET.	REVISION	DATE	BY
F	REDRAWN WITHOUT CHANGE	6-6-41	I.M.M.
E	J3 NEXT ASSY. 24006 WAS 21346	9-15-43	M.G.S.
D	1 9/16 ADDED	6-11-43	C.E.K.
C	WELD REVISED	4-20-43	C.K.
B	.375 WAS 5/16.	4-20-43	C.K.
A	5/8" ± 1/32 WAS 1/2"	1-21-42	H.R.R.

MODEL	PER PLANE	NEXT ASSEMBLY	SUPERSEDES	SUP. BY
TG-8	1L. 1R.	22026		
L-4B	1L. 1R.	21346		
L-4A	1L. 1R.	21346		
J3	1L. 1R.	24006	D2223-B	

THIS DRAWING IS THE PROPERTY OF THE PIPER AIRCRAFT CORP. AND ITS POSSESSION BY UNAUTHORIZED PERSONS SHALL NOT BE CONSTRUED AS PERMISSION TO REPRODUCE FOR SALE, IN WHOLE OR IN PART, ANY DEVICES SHOWN THEREON

PIPER AIRCRAFT CORP.
LOCK HAVEN, PENNA.

PART No.	NO. REQ.	NAME / MATERIAL
20961-1	1	FLANGED PLATE
20961		
20951-1	1	PLATE
20951		

SCALE — TOTAL WT.—LBS.
FINISH—PIPER SPECIFICATION #10
MANUFACTURING PRACTICES—PIPER SPECIFICATION #9

HOUSING INSTALL.—FUSELAGE AILERON PULLEY

DRAFTSMAN	CHECKER	STANDARDS
F. B. 10-10-41	R. C. M. 10-13-41	

20972

617

A617

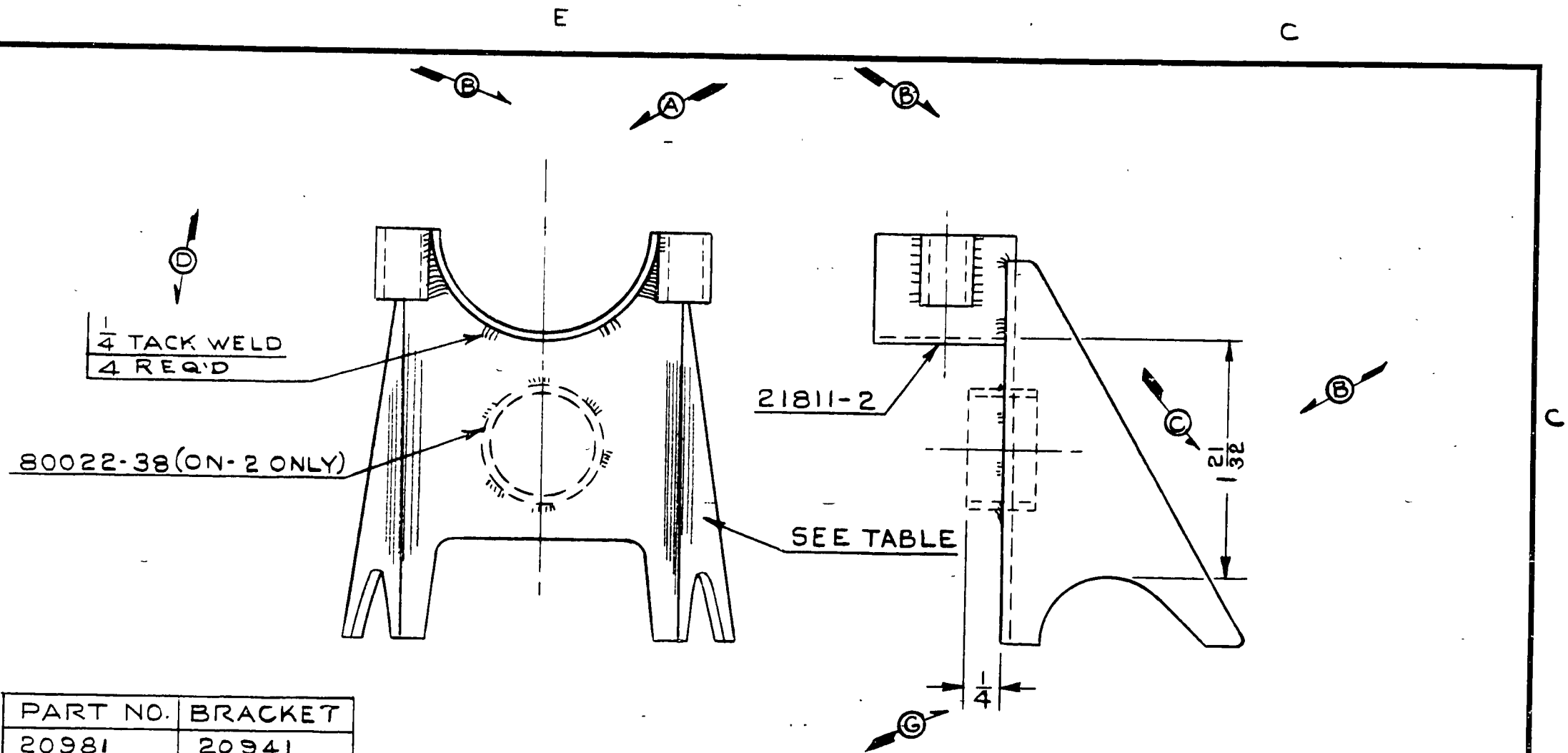

PART NO.	BRACKET
20981	20941
20981-2	20941-2

F

PART NO.	NO. REQ.	MATERIAL
80022-38	1	BUSHING (ON-2 ONLY)
21811-2	1	LOWER BEARING ASS'Y.
	1	BRACKET (SEE TABLE)

SCALE FULL SIZE | TOTAL WT.—LBS.

FINISH—PIPER SPECIFICATION # 10

MANUFACTURING PRACTICES—PIPER SPECIFICATION # 9

LET	REVISION	DATE	BY
H	REDRAWN WITHOUT CHANGE	5-29-51	I.M.M.
G	1/4 DIM. ADDED	12-20-49	K.D.
F	-2 ADDED	2-8-49	R.M.
E	21811-3 REMOVED	3-19-46	H.M.Z.
D	WELDING REVISED	8-6-43	J.E.C.
C	1 21/32 ADDED, 2 3/8 REMOVED	6-24-43	H.J.G.
B	OIL HOLE & 2 3/8 DIM. ADDED	4-12-43	C.K.
A	PART 21811-3 ADDED	10-22-42	C.E.K.

MODEL	PER PLANE	NEXT ASSEMBLY	SUPERSEDES	SUP. BY
L-4B	1	20992		
L-4A	1	20992		
J3	1	20992		

THIS DRAWING IS THE PROPERTY OF THE PIPER AIRCRAFT CORP. AND ITS POSSESSION BY UNAUTHORIZED PERSONS SHALL NOT BE CONSTRUED AS PERMISSION TO REPRODUCE FOR SALE IN WHOLE OR IN PART ANY DEVICES SHOWN THEREON.

PIPER AIRCRAFT CORP.
LOCK HAVEN, PENNA.

BRACKET ASSY. - TORQUE TUBE FRONT BEARING

V. F.	R.C.M.	
10-9-41	10-10-41	
DRAFTSMAN	CHECKER	STANDARDS

20981

242

A242

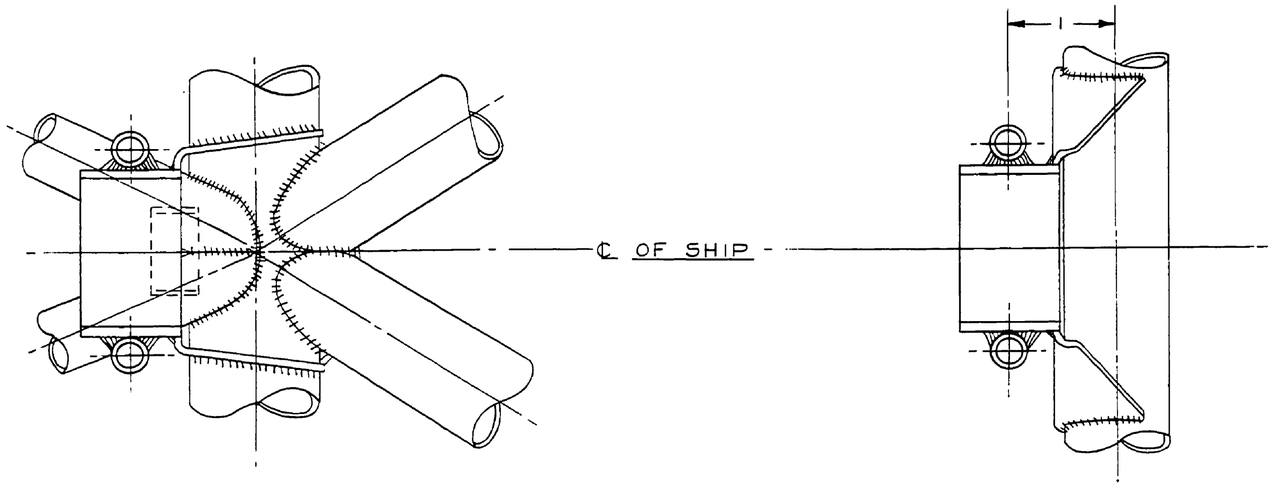

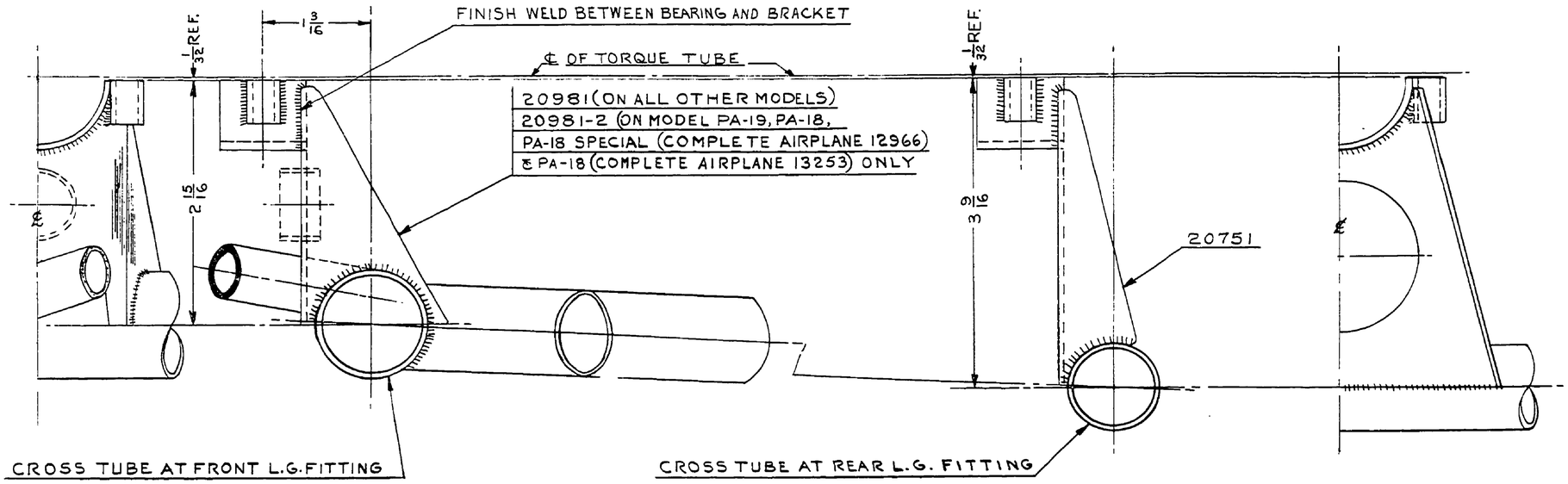

THIS DRAWING IS THE PROPERTY OF THE PIPER AIRCRAFT CORP. AND ITS POSSESSION BY UNAUTHORIZED PERSONS SHALL NOT BE CONSTRUED AS PERMISSION TO REPRODUCE FOR SALE, IN WHOLE OR IN PART. ANY DEVICES SHOWN THEREON

LET.	REVISION	DATE	BY
L	REDRAWN & REVISED	6-8-51	I.M.M.

MODEL	PER PLANE	NEXT ASSEMBLY	SUPERSEDES	SUP. BY

PIPER AIRCRAFT CORP.
LOCK HAVEN, PENNA.

PART NO.	NO. REQ.	NAME / MATERIAL	
20981-2	1	BRACKET ASS'Y.	ON MODEL PA-19, PA-18, PA-18 SPECIAL (COMPLETE AIRPLANE 12966) & PA-18 (COMPLETE AIRPLANE 13253)
20981		BRACKET ASS'Y	ON ALL OTHER MODELS
20751	1	BRACKET ASSY-REAR	

SCALE FULL SIZE — TOTAL WT.-LBS.
FINISH-PIPER SPECIFICATION #10
MANUFACTURING PRACTICES-PIPER SPECIFICATION #9

BEARING INSTALLATION — TORQUE TUBE LOWER

DRAFTSMAN	CHECKER	STANDARDS	
I.M.M. 6-8-51	H.R.K. 6-22-51		20992

797

A797

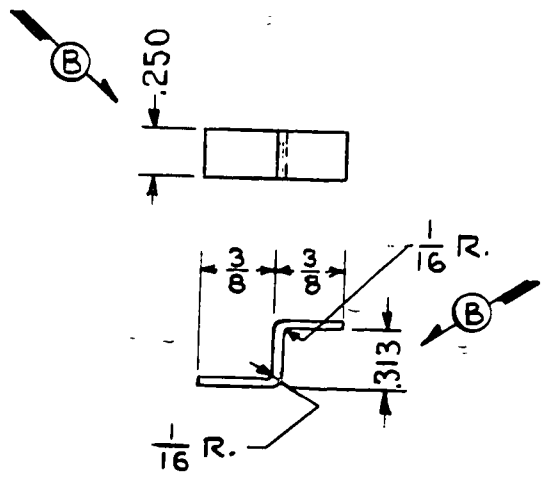



LET	REVISION	DATE	BY
D	REDRAWN WITHOUT CHANGE	5-29-51	I.M.N.
C	J5C MODEL REF. ADDED	8-1-46	I.D.B.
B	DIMENSIONS REVISED	5-20-43	C.E.K.
A	TG-8 NEXT ASSY. 21742 WAS 22626	5-20-43	C.E.K.

MODEL	PER PLANE	NEXT ASSEMBLY	SUPERSEDES	SUP. BY
J5C	2	20412		
TG-8	2	21742		
L-4B	2	21742		
L-4A	2	21742		
J3	2	21742		

THIS DRAWING IS THE PROPERTY OF THE PIPER AIRCRAFT CORP. AND ITS POSSESSION BY UNAUTHORIZED PERSONS SHALL NOT BE CONSTRUED AS PERMISSION TO REPRODUCE FOR SALE IN WHOLE OR IN PART ANY DEVICES SHOWN THEREON.

PIPER AIRCRAFT CORP.
LOCK HAVEN, PENNA.

PART NO.	NO. REQ.	SIZE	MATERIAL
		.045 x 1/4 x 29/32	#1025 STEEL

SCALE FULL SIZE | TOTAL WT.—LBS.

FINISH—PIPER SPECIFICATION # 10

MANUFACTURING PRACTICES—PIPER SPECIFICATION # 9

CLIP—STABILIZER ADJUSTMENT CONTROL CABLE GUIDE

F. E.	R. C. M.		
10-13-41	10-14-41		
DRAFTSMAN	CHECKER	STANDARDS	

21011

243

A243

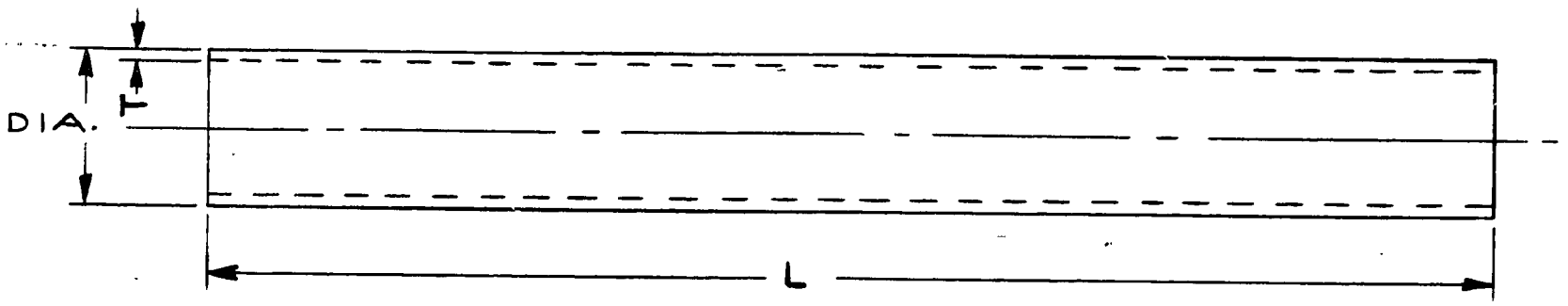

PART NO.	D.	L	T	MATERIAL	REMARKS
21121-2	.667/.660	6 1/2	.035	#4130 STEEL	WAS 80132-4, J2-2057
21121-3	.665	9 1/2	.035	#4130 STEEL	WAS 80132-5, 2333
21121-4	5/8	9	.058	#4130 STEEL	
21121-5	.665	12	.035	#4130 STEEL	
21121-6	1	5	.035	#1025 STEEL	
21121-7	.665	3 1/2	.035	#4130 STEEL	
21121-8	3/4	2 5/16	.065	#1025 S.S.T.	

LET	REVISION	DATE	BY
M	REDRAWN & REVISED	6-20-51	C.K.

MODEL	PER PLANE	NEXT ASSEMBLY	SUPERSEDES	SUP. BY

THIS DRAWING IS THE PROPERTY OF THE PIPER AIRCRAFT CORP. AND ITS POSSESSION BY UNAUTHORIZED PERSONS SHALL NOT BE CONSTRUED AS PERMISSION TO REPRODUCE FOR SALE IN WHOLE OR IN PART ANY DEVICES SHOWN THEREON.

PIPER AIRCRAFT CORP.
LOCK HAVEN, PENNA.

PART NO. | NO. REQ. | MATERIAL

SCALE | TOTAL WT.—LBS.

FINISH—PIPER SPECIFICATION # 10

MANUFACTURING PRACTICES—PIPER SPECIFICATION # 9

TUBES — FUSELAGE LINER

DRAFTSMAN	CHECKER	STANDARDS
C. E. K. 6-20-51	H. R. K. 6-21-51	

21121

244

A244

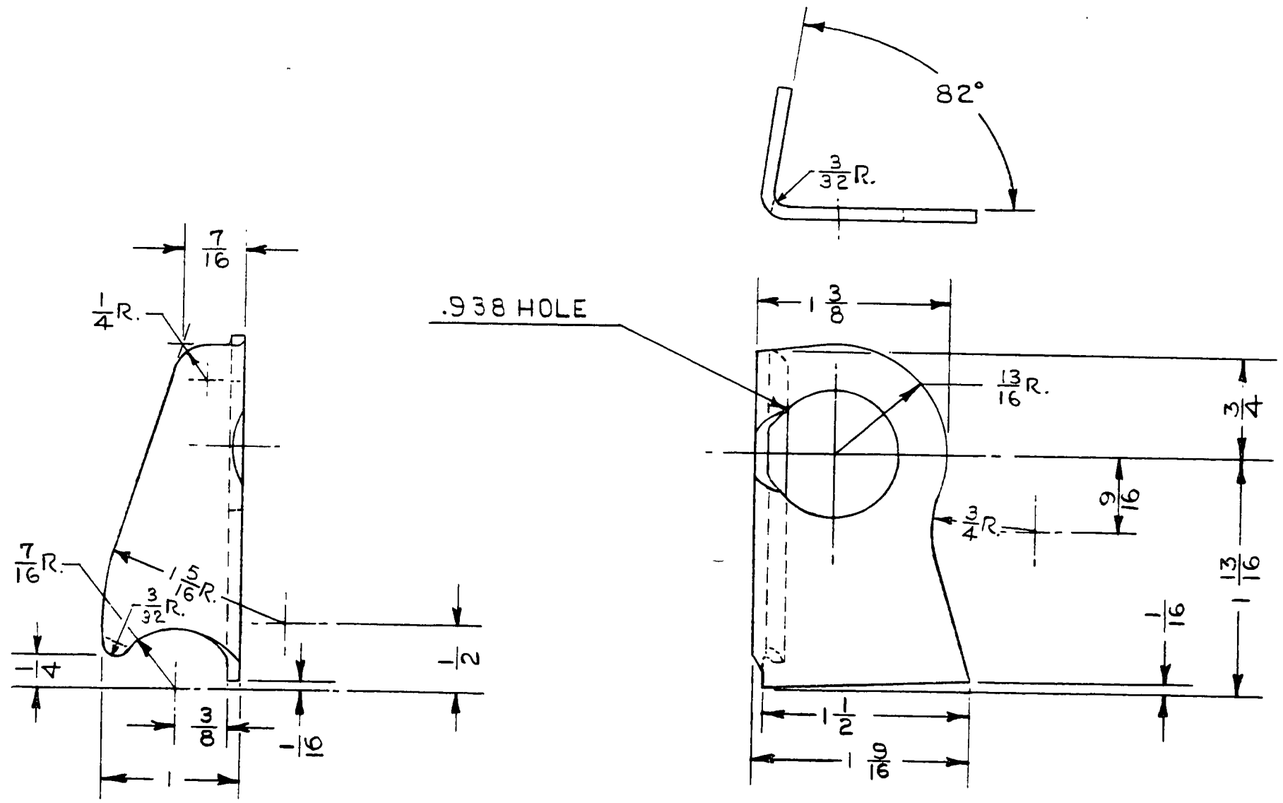

21151 L.H. SHOWN
21151-1 R.H. BENT OPPOSITELY

										.095 × 2 1/2 × 2 5/8	#1025 STEEL
									PART NO.	NO. REQ.	SIZE / DESCRIPTION
											MATERIAL
									SCALE FULL SIZE		TOTAL WT.—LBS.
									FINISH—PIPER SPECIFICATION # 10		
									MANUFACTURING PRACTICES—PIPER SPECIFICATION # 9		
									BRACKET—STABILIZER REAR SUPPORT		
B	REDRAWN & REVISED	6-20-51	I.M.M.	MODEL	PER PLANE	NEXT ASSEMBLY	SUPERSEDES	SUP. BY	I.M.M. 6-20-51 DRAFTSMAN	H.R.K. 6-22-51 CHECKER	STANDARDS
LET	REVISION	DATE	BY								21151

THIS DRAWING IS THE PROPERTY OF THE PIPER AIRCRAFT CORP. AND ITS POSSESSION BY UNAUTHORIZED PERSONS SHALL NOT BE CONSTRUED AS PERMISSION TO REPRODUCE FOR SALE IN WHOLE OR IN PART ANY DEVICES SHOWN THEREON.

PIPER AIRCRAFT CORP.
LOCK HAVEN, PENNA.

C18

A618

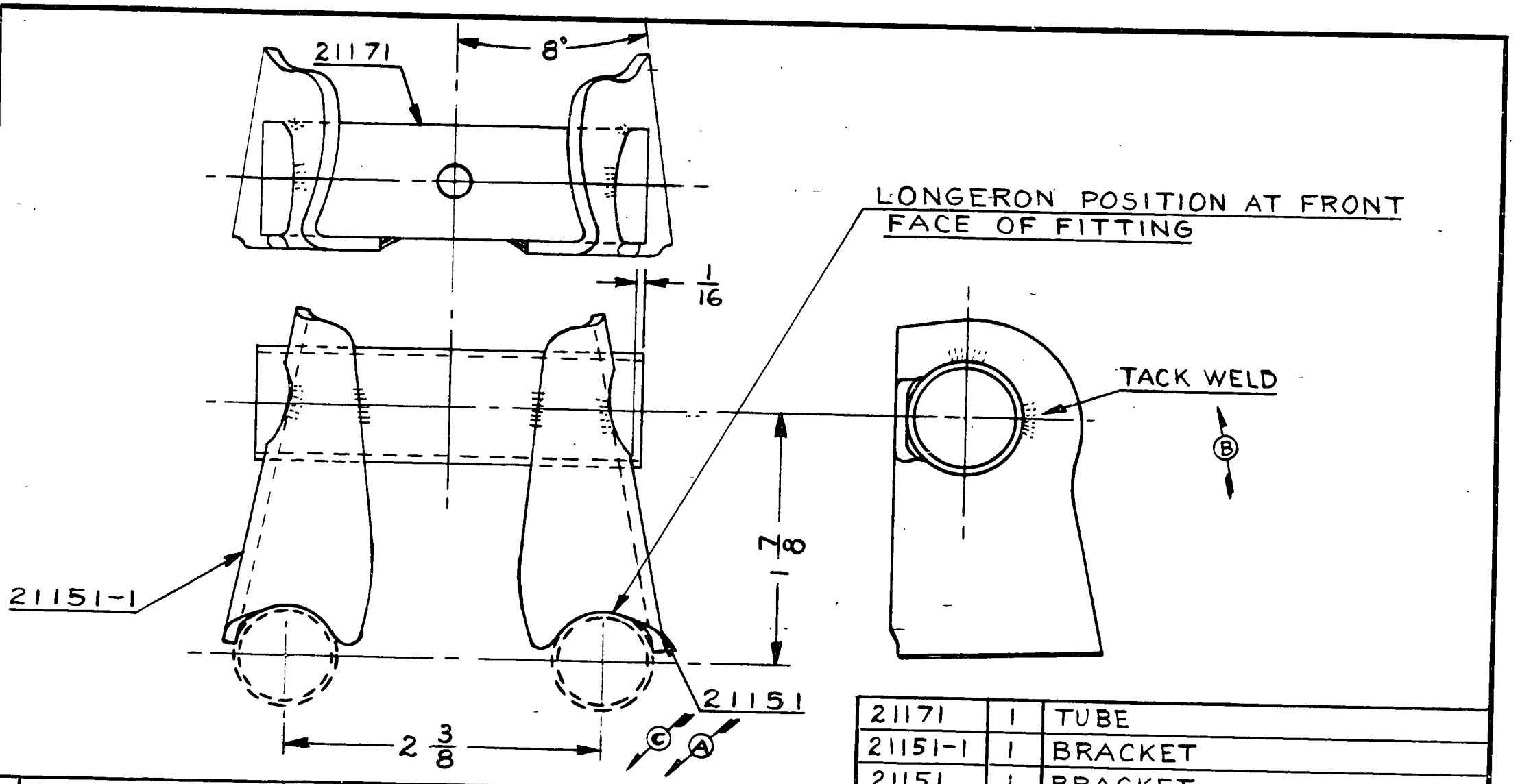

PART NO.	NO. REQ.	NAME / MATERIAL
21171	1	TUBE
21151-1	1	BRACKET
21151	1	BRACKET

SCALE FULL SIZE | TOTAL WT.—LBS.

FINISH—PIPER SPECIFICATION # 10

MANUFACTURING PRACTICES—PIPER SPECIFICATION # 9

MODEL	PER PLANE	NEXT ASSEMBLY	SUPERSEDES	SUP. BY
TG-8	1	21302		
L-4B	1	21302		
L-4A	1	23932		
J3	1	23932	D207-A	

LET	REVISION	DATE	BY
D	REDRAWN WITHOUT CHANGE	6-20-51	C.K.
C	J3 NEXT ASSY 23932 WAS 21302	9-23-43	L.R.
B	FULL WELD REMOVED; TACK WELD ADDED	8-4-43	R.E.T.
A	L-4A NEXT ASSY. 23932 WAS 21302	4-6-43	R.T.M.

THIS DRAWING IS THE PROPERTY OF THE PIPER AIRCRAFT CORP. AND ITS POSSESSION BY UNAUTHORIZED PERSONS SHALL NOT BE CONSTRUED AS PERMISSION TO REPRODUCE FOR SALE IN WHOLE OR IN PART ANY DEVICES SHOWN THEREON.

PIPER AIRCRAFT CORP.
LOCK HAVEN, PENNA.

SUPPORT ASS'Y.—
STABILIZER REAR

DRAFTSMAN	CHECKER	STANDARDS
F. B. 11-13-41	R. C. M. 11-20-41	

21161

A245

WAS J3-23
D207-A

10757

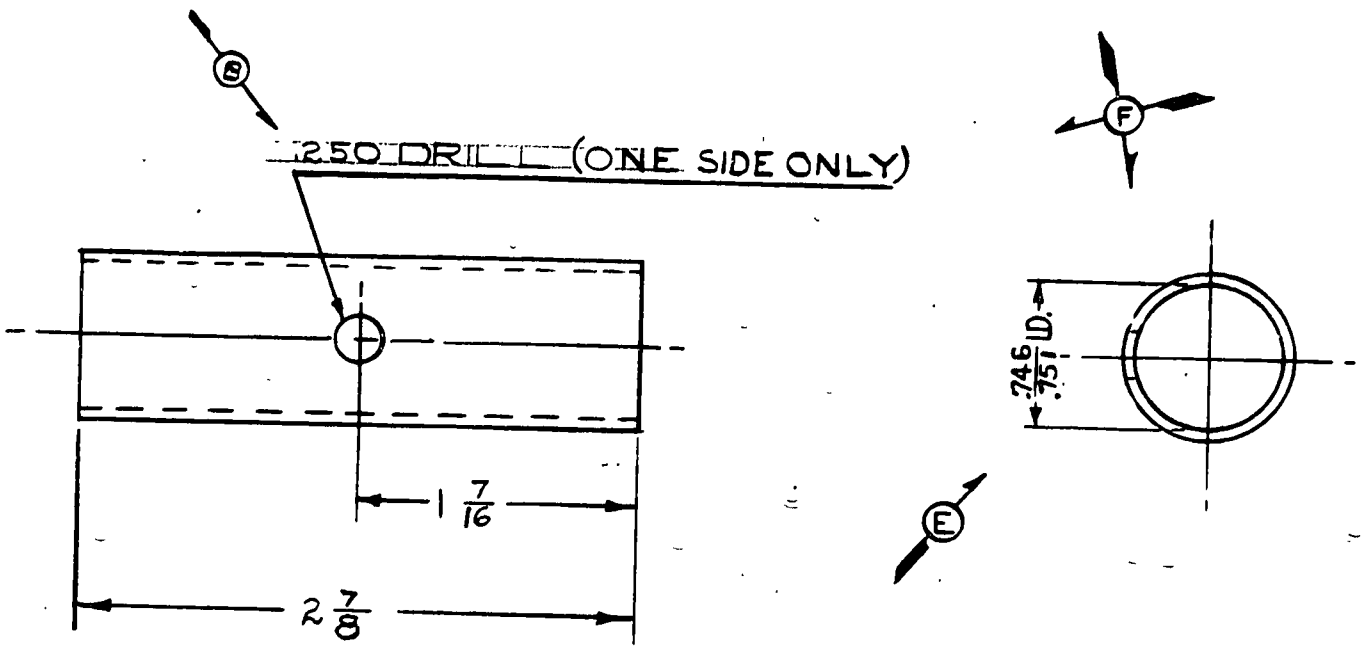

LIMITS, SHOP PRACTICES AND FINISH. UNLESS OTHERWISE NOTED, TO BE IN ACCORDANCE WITH PIPER SPECIFICATIONS #9 AND #10.

LET.	REVISION	DATE	BY
F	HOLE SHOWN IN ONE SIDE ONLY	4-3-45	HMZ
E	.746/.751 I.D. DIM. ADDED	12-28-44	I.M.
D	REDRAWN WITHOUT CHANGE	4-20-44	Y.P.
C	MAT'L. SPEC. REVISED	1-7-44	AIN
B	.250 DRILL WAS 1/4 DRILL	10-11-4	[illegible]
A	7/8 x .065 WAS 7/8 x .058	6-29-43	H.R.K.

MODEL	PER SHIP	NEXT ASSEMBLY	SUPERSEDES	SUP. BY
L-4B	1	21161		
J5C HE-4	1	21211		
L-4A	1	21161		
J5C J5C	1	21211		
[illegible]	1	21161		

PIPER AIRCRAFT CORP.
LOCK HAVEN, PENNA.

PART No.	No. REQ.	SIZE	DESCRIPTION / MATERIAL
		7/8 x .746/.751 I.D. x 2 7/8	* 1025 STEEL SEAMLESS TUBE

SCALE FULL SIZE — TOTAL WT. - LBS.
FINISH

TUBE — STABILIZER REAR SUPPORT

DRAWN	CHECKED	APPROVED
F.B. 11-13-41	R.C.M. 11-20-41	

21171

142

A246

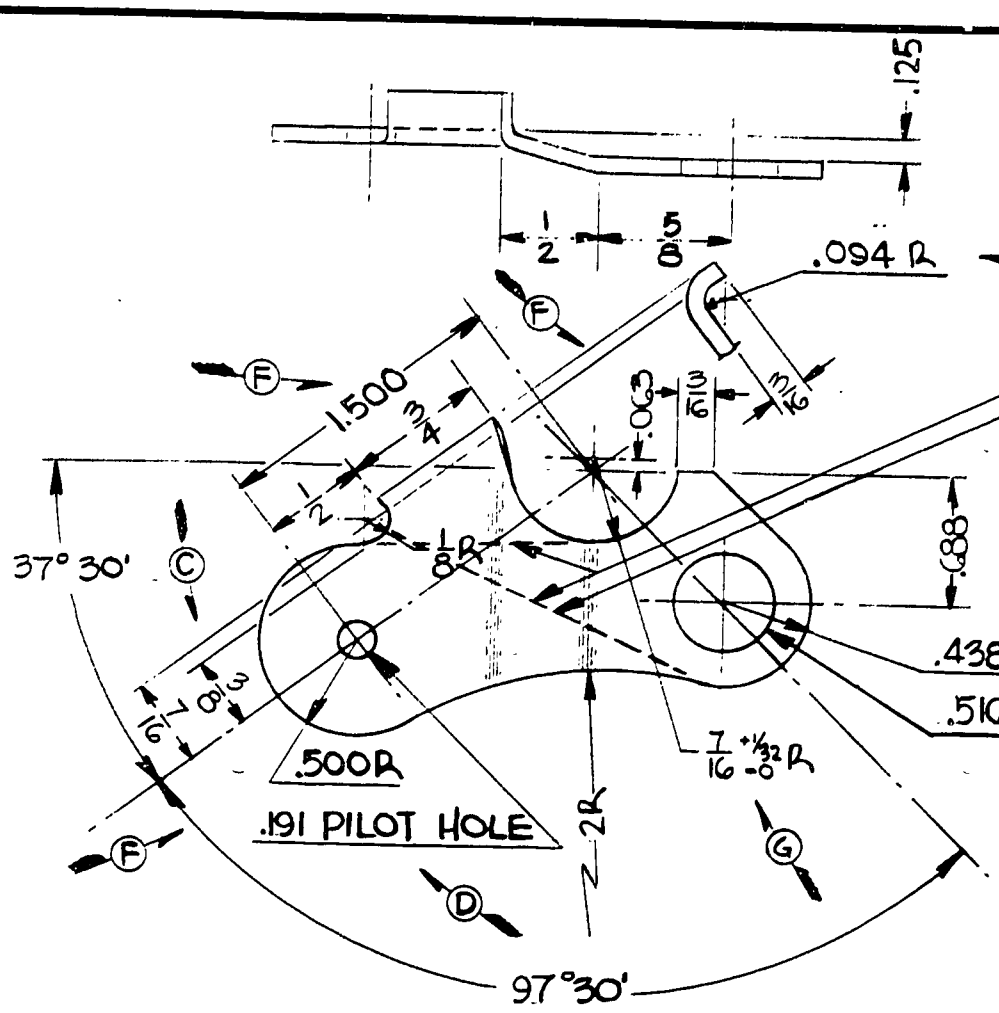

CUT AS SHOWN DOTTED FOR -6 & -7 ONLY
CUT AS SHOWN DOTTED FOR -4 & -5 ONLY

21181-2 SHOWN
21181-3 OPPOSITE
21181-4 CUT AS SHOWN DOTTED
21181-5 OPPOSITE & CUT AS SHOWN DOTTED
21181-6 CUT AS SHOWN DOTTED
21181-7 OPPOSITE & CUT AS SHOWN DOTTED

LET	REVISION	DATE	BY
K	REDRAWN WITHOUT CHANGE	6-20-51	M.G.
J	-6 & -7 ADDED	1-15-48	R.M.
H	-4 & -5 ADDED	11-19-47	H.R.K.
G	TOLERANCE ADDED	3-24-43	H.R.K.
F	DEC. WERE FRACTIONS	3-24-43	H.R.K.
E	.516 DIA. HOLE WAS 1/2 DIA. HOLE	3-24-43	H.R.K.
D	.191 PILOT HOLE WAS 1/8 DIA. HOLE	3-24-43	H.R.K.
C	3/8 DIM. ADDED	3-24-43	H.R.K.
B	REDRAWN & REVISED	1-29-43	R.I.M.

MODEL	PER PLANE	NEXT ASSEMBLY	SUPERSEDES	SUP. BY
TG-8	1 EA	2328J		
J3	1 EA	21772		
14B	2 EA	21772		
14A	2 EA	21772		

THIS DRAWING IS THE PROPERTY OF THE PIPER AIRCRAFT CORP. AND ITS POSSESSION BY UNAUTHORIZED PERSONS SHALL NOT BE CONSTRUED AS PERMISSION TO REPRODUCE FOR SALE IN WHOLE OR IN PART ANY DEVICES SHOWN THEREON.

PIPER AIRCRAFT CORP.
LOCK HAVEN, PENNA.

PART NO.	NO. REQ.	SIZE	DESCRIPTION / MATERIAL
		.095x2x3	#1025 STEEL

SCALE FULL SIZE | TOTAL WT.—LBS.
FINISH—PIPER SPECIFICATION # 10
MANUFACTURING PRACTICES—PIPER SPECIFICATION # 9

PLATE—LANDING GEAR FRONT FITTING

DRAFTSMAN	CHECKER	STANDARDS
McRAE 1-22-43	L.E.K. 1-27-43	

21181

247

A247

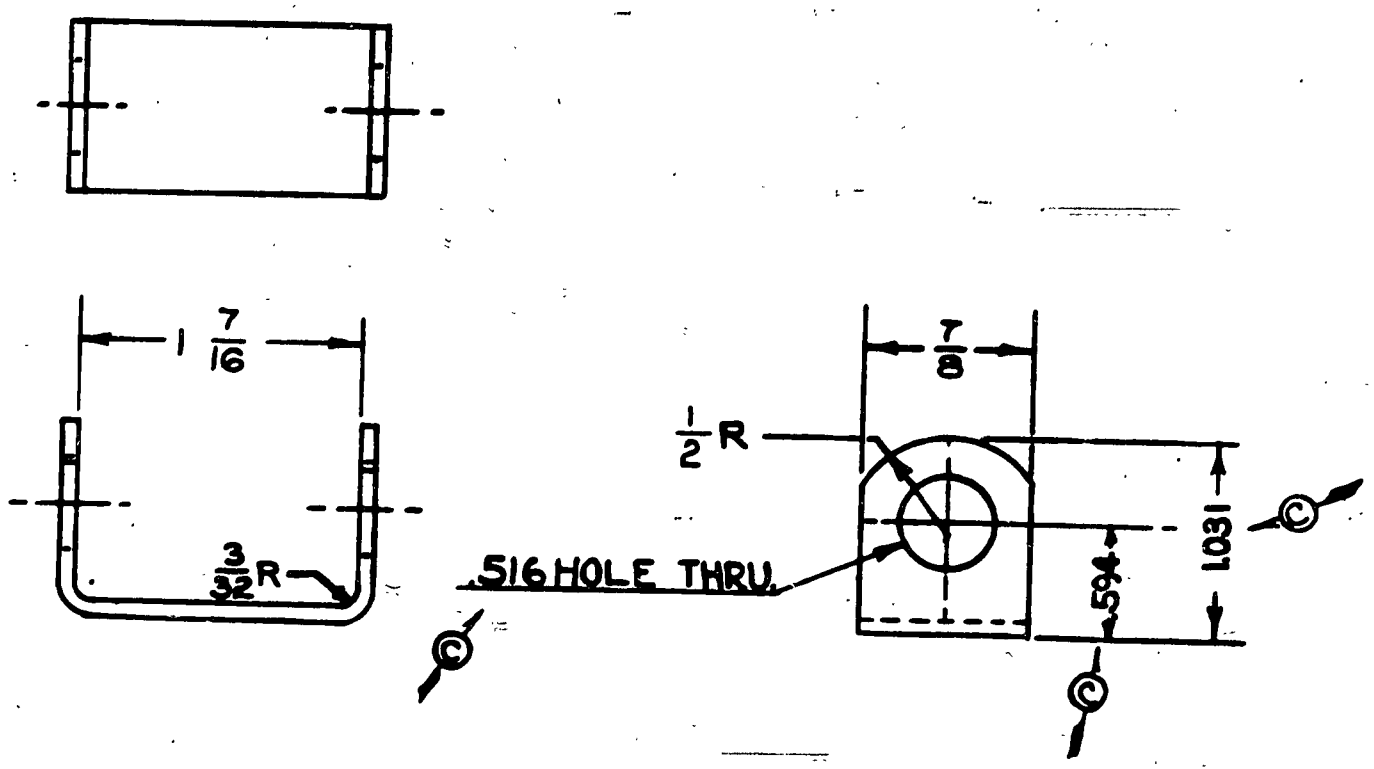

LIMITS, SHOP PRACTICES AND FINISH, UNLESS OTHERWISE NOTED, TO BE IN ACCORDANCE WITH PIPER SPECIFICATIONS #9 AND #10.

MODEL	PER SHIP	NEXT ASSEMBLY	SUPERSEDES	SUPERSEDED BY
TG-8	2	23281		
J-4A	2	21272		
J-4B	2	21272		
J-3	2	21272		

LET.	REVISION	DATE	BY	
C	DIMENSIONS REVISED	5-8-43	R.R.F.	
B	REDAWN & REVISED	2-20-43	R.T.M.	

PIPER AIRCRAFT CORP.
LOCK HAVEN, PENNA.

PART No.	No. REQ.	SIZE	DESCRIPTION
		.095 x 7/8 x 3 11/32	9025 STEEL
		MATERIAL	

SCALE FULL SIZE

"U" FITTING-LANDING GEAR FRONT

DRAWN	CHECKED	APPROVED
McRAE 1-22-43	L.E.K. 1-27-43	

21191

298

A248

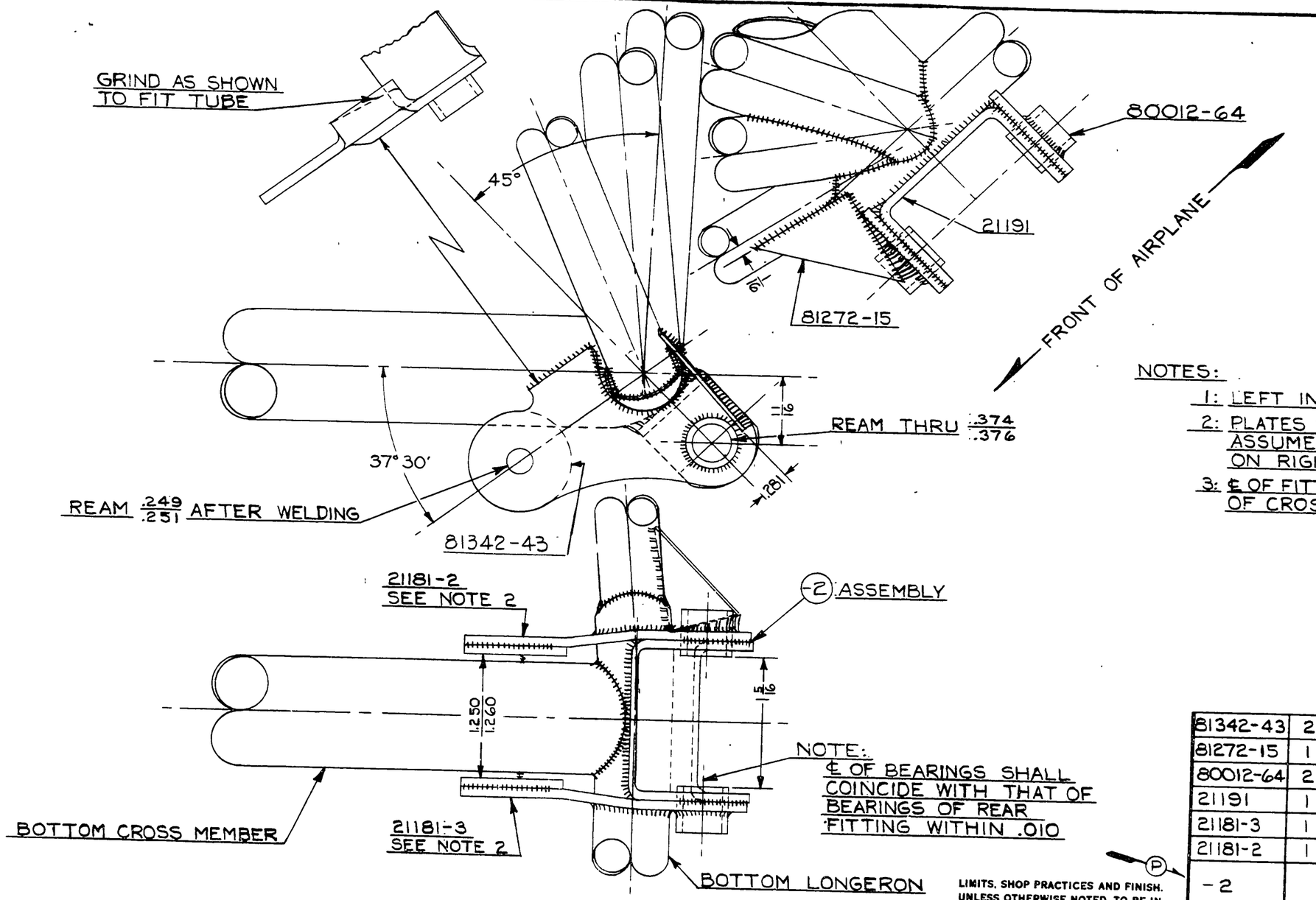

NOTES:

1: LEFT INSTALLATION SHOWN.

2: PLATES 21181-2 & 21181-3 ASSUME OPPOSITE LOCATIONS ON RIGHT INSTALLATION.

3: ℄ OF FITTING TO BE WITHIN 1/32 OF CROSS TUBE ℄.

PART No.	No. REQ.	NAME / MATERIAL
81342-43	2	WASHER
81272-15	1	GUSSET
80012-64	2	BUSHING
21191	1	"U" BRACKET
21181-3	1	PLATE
21181-2	1	
-2		ASS'Y. OF 21181-2, 21181-3, 21191, 2 EACH OF 81342-43 & 80012-64

SCALE FULL SIZE — TOTAL WT.-LBS.

FINISH

P LIMITS, SHOP PRACTICES AND FINISH. UNLESS OTHERWISE NOTED, TO BE IN ACCORDANCE WITH PIPER SPECIFICATIONS #9 AND #10.

LET.	REVISION	DATE	BY
P	2 OF 81342-43 ADDED TO -2	2-7-46	C.E.K.
O	REDRAWN & REVISED	7-24-44	R.D.R

MODEL	PER SHIP	NEXT ASSEMBLY	SUPERSEDES	SUP. BY
L-4A	N. I.R.	21346		
J-3	N. I.R.	24006	20722	

PIPER AIRCRAFT CORP.
LOCK HAVEN, PENNA.

DRAWN	CHECKED	APPROVED
R. REEDER 7-24-44	R.E.T. 8-3-44	

FITTING INSTALLATION— LANDING GEAR FRONT

21272

619

A619

WAS J3-243
J3-248

B

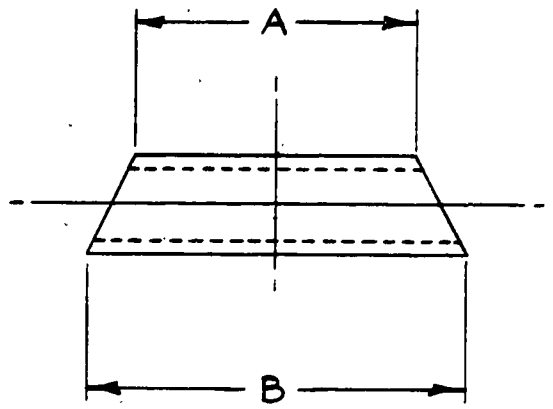

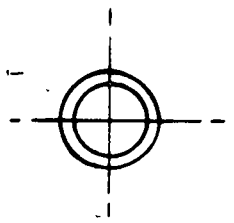

B

PART NO.	A	B
21281	1 7/16	1 15/16
21281-2	1 5/16	1 5/8

E

C A

PART No.	No. REQ.	SIZE	DESCRIPTION
		1/2 x .065 x NOTED	#1025 STL. TUBE
		MATERIAL	

SCALE FULL SIZE — TOTAL WT.—LBS.

FINISH—PIPER SPECIFICATION #10

MANUFACTURING PRACTICES—PIPER SPECIFICATION #9

STOP—
ELEVATOR FRONT

MODEL	PER PLANE	NEXT ASSEMBLY	SUPERSEDES	SUP. BY
TG-8	1	21302		
L-4B	1	21302		
J5-HE	1	20602		
J5D	1	20602		
J5C	1	20602		
L-4A	1	23932		
J3	1	23932		

LET.	REVISION	DATE	BY
E	TABLE ADDED; -2 ADDED	1-9-50	MG
D	REDRAWN WITHOUT CHANGE	4-19-44	V.P.
C	J3 NEXT ASSY. 23932 WAS 21302	9-23-43	L.R.
B	1/2 DIM. REMOVED	6-23-43	H.J.G
A	L-4A NEXT ASSY. 23932 WAS 21302	4-6-43	R.T.M

PIPER AIRCRAFT CORP.
LOCK HAVEN, PENNA.

F. B	R.C.M.		
11-25-41	12-15-41		21281
DRAFTSMAN	CHECKER	STANDARDS	

PENCILTEX A. & B. SMITH CO., PGH., PA.

249

A249

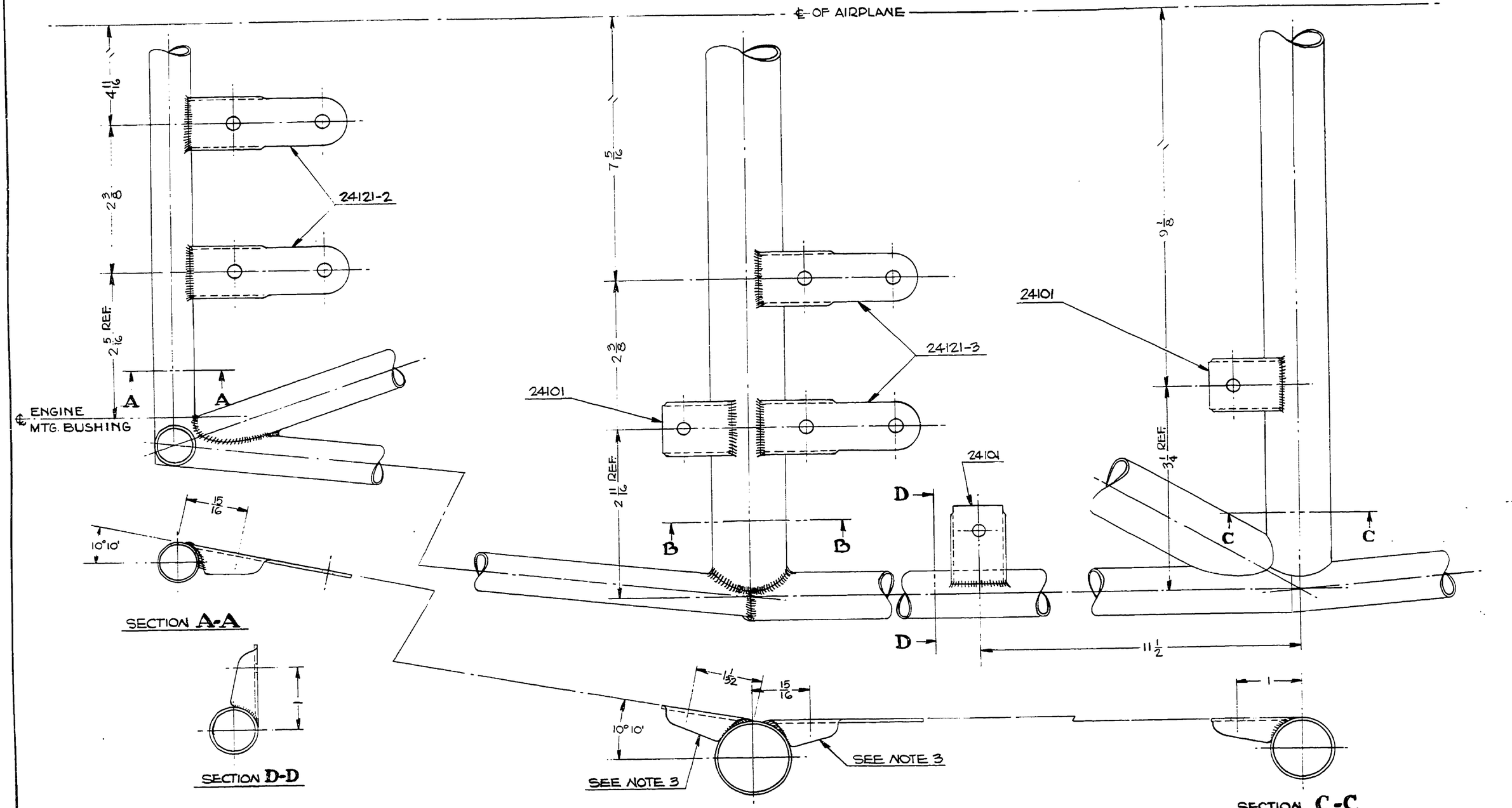

NOTES:

1. LUGS BETWEEN CONSECUTIVE CROSS MEMBERS TO LIE IN SAME PLANE AS SHOWN AND SHALL BE TANGENT TO THE MEMBERS TO WHICH THEY ARE ATTACHED.
2. LEFT INSTALLATION SHOWN.
3. WHERE "SEE NOTE 3" IS INDICATED, HOLES MUST COINCIDE WITH RELATED HOLES ON 54352

THIS DRAWING IS THE PROPERTY OF THE PIPER AIRCRAFT CORP. AND ITS POSSESSION BY UNAUTHORIZED PERSONS SHALL NOT BE CONSTRUED AS PERMISSION TO REPRODUCE FOR SALE, IN WHOLE OR IN PART, ANY DEVICES SHOWN THEREON

LET.	REVISION	DATE	BY
D	REDRAWN & REVISED	6-22-51	M.G.

MODEL	PER PLANE	NEXT ASSEMBLY	SUPERSEDES	SUP. BY

PART NO.	NO. REQ.	NAME / MATERIAL
24-121-3	2	
24121-2	2	FITTING
24101	3	

SCALE FULL SIZE — TOTAL WT.—LBS.

FINISH—PIPER SPECIFICATION #10

MANUFACTURING PRACTICES—PIPER SPECIFICATION #9

FITTINGS INSTALLATION — COCKPIT FLOORBOARD

PIPER AIRCRAFT CORP.
LOCK HAVEN, PENNA.

DRAFTSMAN	CHECKER	STANDARDS
M.W.G. 6-22-51	I.E.M. 6-29-51	

21483

798

A798

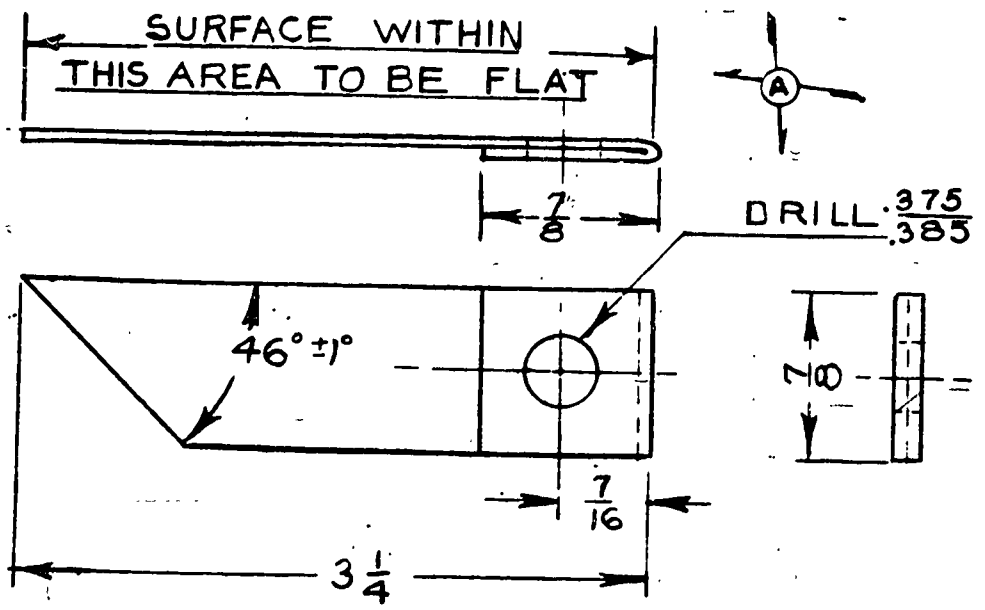

21571 L.H. SHOWN
21571-1 R.H. BENT OPPOSITELY

B LIMITS, SHOP PRACTICES AND FINISH, UNLESS OTHERWISE NOTED, TO BE IN ACCORDANCE WITH PIPER SPECIFICATIONS #9 AND #10.

PART No.	No. REQ.	SIZE	DESCRIPTION
		.062 × 7/8 × 4 1/8	#1025 STEEL

MATERIAL

SCALE FULL SIZE

BRACKET — STABILIZER ADJUSTMENT CRANK

MODEL	PER SHIP	NEXT ASSEMBLY	SUPERSEDES	SUPERSEDED BY
HET-J5D	1R; 1L	21582		
TG-8	1	22672		
L-4A L-4B	1R; 1L	21582		
J5C	1R; 1L	24066		
J3	1R; 1L	21582	D2146-A	

LET.	REVISION	DATE	SR.	BY
B	J5C NA. 24066 WAS 21582	10-3-45		I.D.B.
A	DIM. & NOTE REVISED	5-25-43		I.D.B.

PIPER AIRCRAFT CORP.
LOCK HAVEN, PENNA.

DRAWN	CHECKED	APPROVED
C.L.W 11-4-41	RRB 1-27-42	

21571

250

A 250

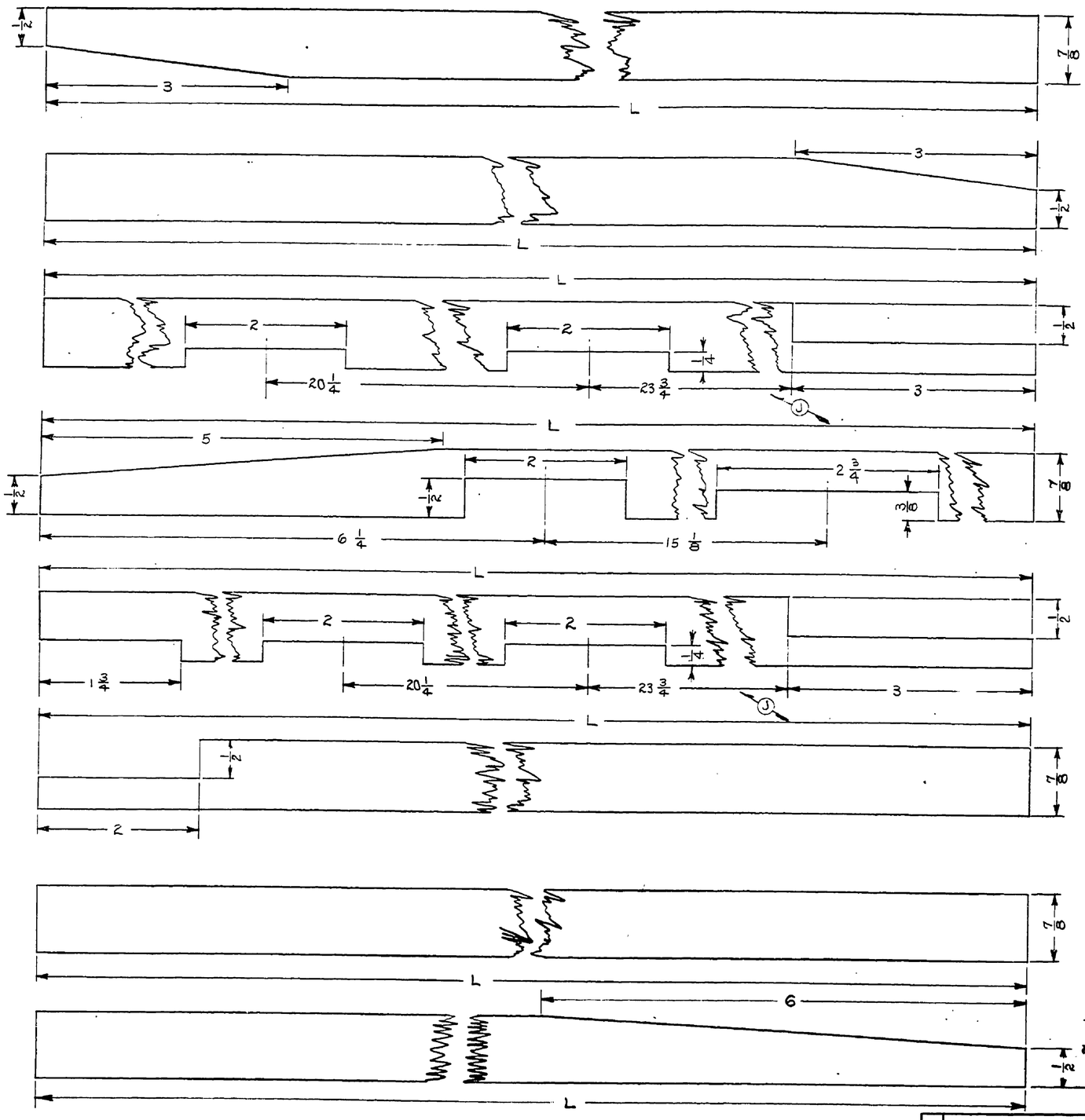

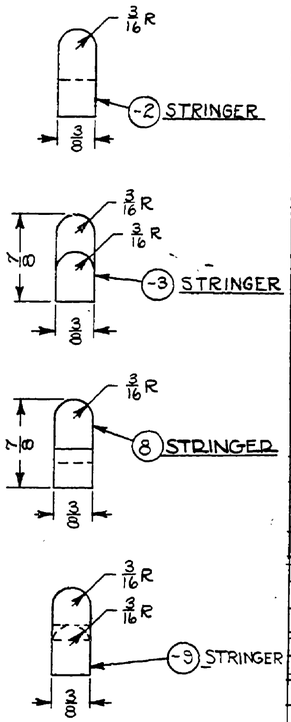

PART NO.	TYPE	L	MODEL	PER PLANE	NEXT ASSEMBLY
21621-2	SEE DETAIL	130	J3	1	24096
21621-3	SEE DETAIL	102	J3	2	24096
21621-4	1	171			
21621-5	1	144			
21621-6	1	121			
21621-7	1	110 1/2	J5C	2	24186
21621-8	SEE DETAIL	181 1/4	J5C	1	24186
21621-9	SEE DETAIL	150 1/2	J5C	1	24186
21621-10	SEE DETAIL	149 1/2	J5C	1	24186
21621-11	SEE DETAIL	51 1/2	J5C	2	24186
21621-12	1	66 1/2	J5C	2	24186
21621-13	1	119 3/8	J5C	1	24186
21621-14	1	88			
21621-15	1	41			
21621-16	SEE DETAIL	47 3/4			
21621-17	SEE DETAIL	66 1/2			
21621-18	SEE DETAIL	108			
21621-19	1	64			
21621-20	1	58			
21621-21	1	83			
21621-22	LIKE -11	55			
21621-23	LIKE-3	92 1/8			
21621-24	1	TRO			
21621-25	LIKE -8	108			
21621-26	LIKE-18	91 3/4			
21621-27	LIKE-3	88 1/2			

LET.	REVISION	DATE	BY
S	-27 ADDED	3-2-51	MG
R	-26 ADDED	10-14-49	RM
Q	-24.-25 ADDED	7-28-49	RM
P	END OF -18 REVISED	4-6-49	CK.
N	-23 ADDED	3-9-49	CEK
M	-22 ADDED	1-21-49	KB
L	-17,18,19,20,21 ADDED	8-9-48	RC
K	-15 & -16 ADDED	12-1-47	H.R.M
J	1/4 DIM. ADDED FOR -8,9-10	7-30-46	E.L.M
H	L 181 1/4 WAS 190 FOR -8	6-19-46	L.R.
G	-8-9-10-11 REVISED	6-19-46	L.R.
F	REDRAWN & REVISED	3-22-46	H.M.Z

THIS DRAWING IS THE PROPERTY OF THE PIPER AIRCRAFT CORP. AND ITS POSSESSION BY UNAUTHORIZED PERSONS SHALL NOT BE CONSTRUED AS PERMISSION TO REPRODUCE FOR SALE, IN WHOLE OR IN PART, ANY DEVICES SHOWN THEREON

PIPER AIRCRAFT CORP.
LOCK HAVEN, PENNA.

PART NO.	No. REQ.	3/8 X 7/8 X NOTED	SPRUCE OR WHITE PINE
		SIZE	DESCRIPTION
		MATERIAL	

SCALE FULL SIZE — TOTAL WT.—LBS.
FINISH—PIPER SPECIFICATION #10
MANUFACTURING PRACTICES—PIPER SPECIFICATION #9

MODEL	PER PLANE	NEXT ASSEMBLY	SUPERSEDES	SUP. BY
NOTED	NOTED	NOTED		

STRINGERS-
FUSELAGE FAIRING

DRAFTSMAN	CHECKER	STANDARDS
H.M.Z 3-22-46	R.E.T 3-25-46	

21621

799

A799

WAS J3-A200

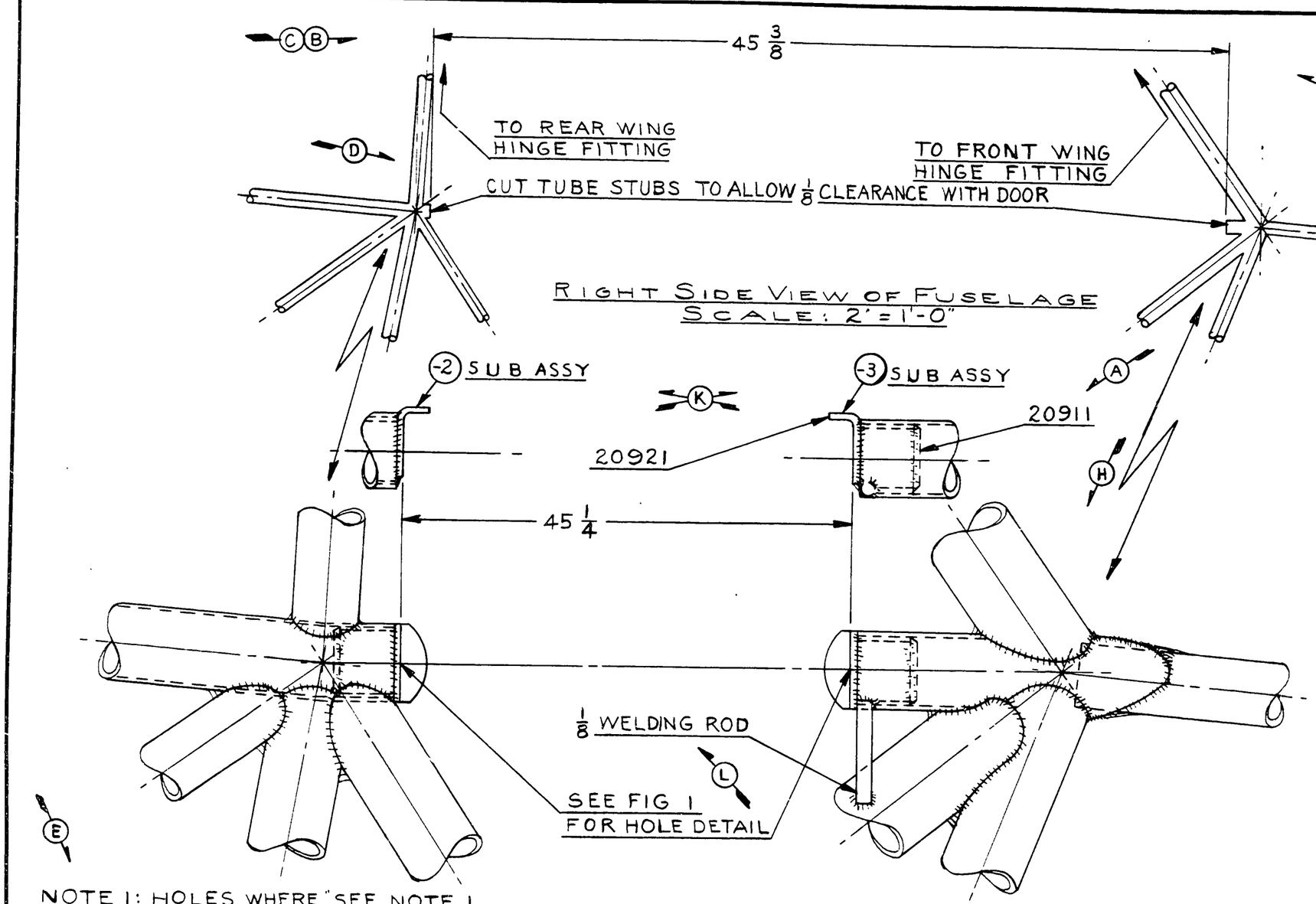

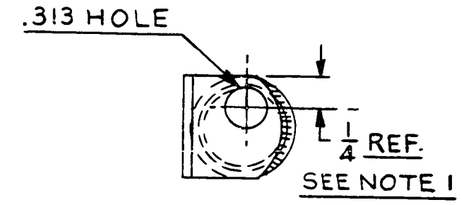

FIG. 1

REAR STOP ASSY SHOWN
FRONT DRILLED OPPOSITELY

NOTE 1: HOLES WHERE "SEE NOTE 1 IS INDICATED SHALL ALIGN WITH PLUNGER IN LOWER DOOR ASSY.

	1	1/8 DIA. x 1	WELDING ROD
-3	—	SUB ASSY CONSISTS OF 20911 & 20921	
-2	—	SUB ASSY CONSISTS OF 20911 & 20921	
20911	2	SEAL CUP	
20921	2	DOOR STOP	
PART No.	No. REQ.	SIZE	DESCRIPTION / MATERIAL

SCALE FULL SIZE & NOTED — TOTAL WT.—LBS.

FINISH—PIPER SPECIFICATION #10

MANUFACTURING PRACTICES—PIPER SPECIFICATION #9

LET.	REVISION	DATE	BY
M	REDRAWN WITHOUT CHANGE	6-5-51	C.K.
L	1/8 WELDING ROD ADDED	5-8-47	E.L.N.
K	-2 & -3 SUB ASSYS ADDED	5-7-46	C.E.K.
J	REMOVED 86062-36	5-1-46	J.E.H.
H	86062-36 ADD. & NOTE REM.	4-23-46	C.E.V.
G	NOTE ADDED	8-15-44	I.D.B.
F	J3 NEXT ASSY 24006 WAS 21346	9-14-43	M.G.S.
E	FIG. 1 & NOTE 1 ADDED	5-24-43	C.E.K.
D	NOTE ADDED	1-21-43	R.T.M.
C	1 13/16 & 1 3/16 REMOVED	1-21-43	R.T.M.
B	13/16 WAS 11/16 ; 1 3/16 WAS 1 5/16	10-30-42	R.F.
A	20911 WAS 21761	6-11-42	M.G.S.

MODEL	PER PLANE	NEXT ASSEMBLY	SUPERSEDES	SUP. BY
J3	1	24006		
L-4A	1	21346		
L-4B	1	21346		
TG-8	1	22626		

THIS DRAWING IS THE PROPERTY OF THE PIPER AIRCRAFT CORP. AND ITS POSSESSION BY UNAUTHORIZED PERSONS SHALL NOT BE CONSTRUED AS PERMISSION TO REPRODUCE FOR SALE, IN WHOLE OR IN PART. ANY DEVICES SHOWN THEREON

PIPER AIRCRAFT CORP.
LOCK HAVEN, PENNA.

STOP INSTALLATION—
FUSELAGE DOOR

DRAFTSMAN	CHECKER	STANDARDS
W. N. Emery 12-11-41		

21752

A620

WAS 40181

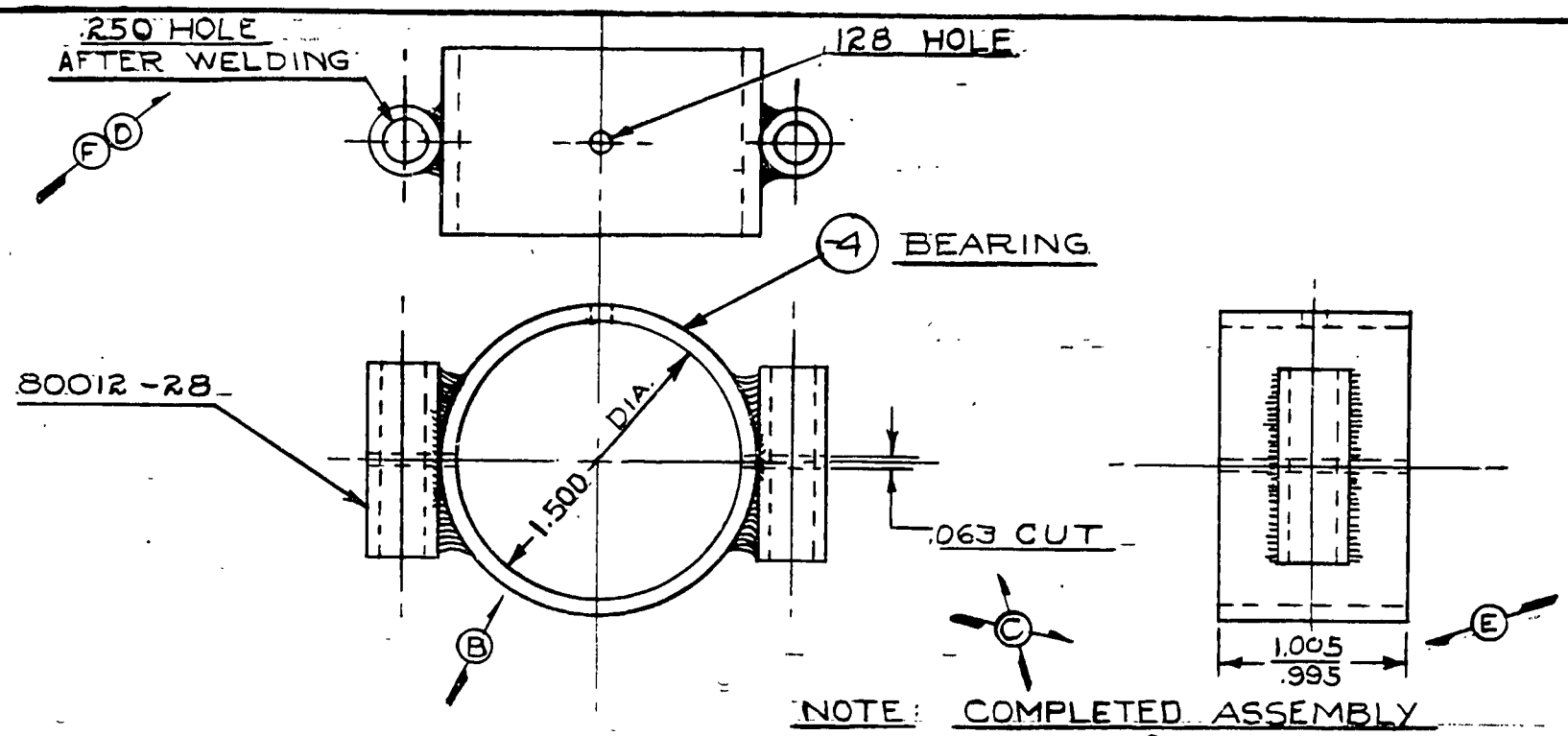

NOTE: COMPLETED ASSEMBLY CUT AT ℄ AS INDICATED BY DOTTED LINES, TO FORM 2 HALVES

PART NO.	MODEL	NO. REQ.	NEXT ASS'Y.
-2	J5, J5C, J5D, HE-1	2	21361, 20751, 20891
	J3, L-4A, L-4B	2	20981, 20751
	TG-6	3	20751, 22591, 22601
-3	J5C	2	42953
	J3, L-4A	2	42833
	TG-8	3	20751, 22591, 22601
	J5, J5D, HE-1, L-4B	2	40673

J
K
L

LIMITS, SHOP PRACTICES AND FINISH, UNLESS OTHERWISE NOTED, TO BE IN ACCORDANCE WITH PIPER SPECIFICATIONS #9 AND #10.

LET.	REVISION	DATE	BY
L	N.A. 40673 ADDED FOR -3	3-19-46	HMZ
K	J3 N.A. 42833 WAS 20981 & 20751 FOR -3	3-19-46	HMZ
J	J5C N.A. 42953 WAS 21361 & 20751 FOR -3	3-19-46	HMZ
H	REDRAWN WITHOUT CHANGE	5-1-44	V. P
G	NOTE REVISED	10-11-43	C.J.H
F	.250 HOLE WAS REAM. .250	8-11-43	W.G.T.
E	1.005/.995 WAS 1.000	6-7-43	C.E.K
D	REAM .250 ADDED	4-13-43	C.K.
C	.063 WAS 1/16; 1.000 WAS 1	3-10-43	C.E.K
B	1.500 DIA. WAS 1 1/2	2-25-43	C.E.K
A	TABLE ADDED	10-23-42	C.E.K

MODEL	PER SHIP	NEXT ASSEMBLY	SUPERSEDES	SUP. BY
NOTED	NOTED	NOTED		

PIPER AIRCRAFT CORP.
LOCK HAVEN, PENNA.

PART No.	NO. REQ.	SIZE	DESCRIPTION / MATERIAL
-3	1		UPPER ASS'Y. AFTER MILLING
-2	1		LOWER ASS'Y. AFTER MILLING
-4	1	.095 x 1 x 5	#1025 STEEL
80012-28	2		BUSHING

SCALE FULL SIZE — TOTAL WT. - LBS.
FINISH

BEARING ASSEMBLY — TORQUE TUBE

DRAWN	CHECKED	APPROVED
W.N. EMERY 8-8-41	V. F. 8-22-41	

21811

251

A 251

WAS D2150-C

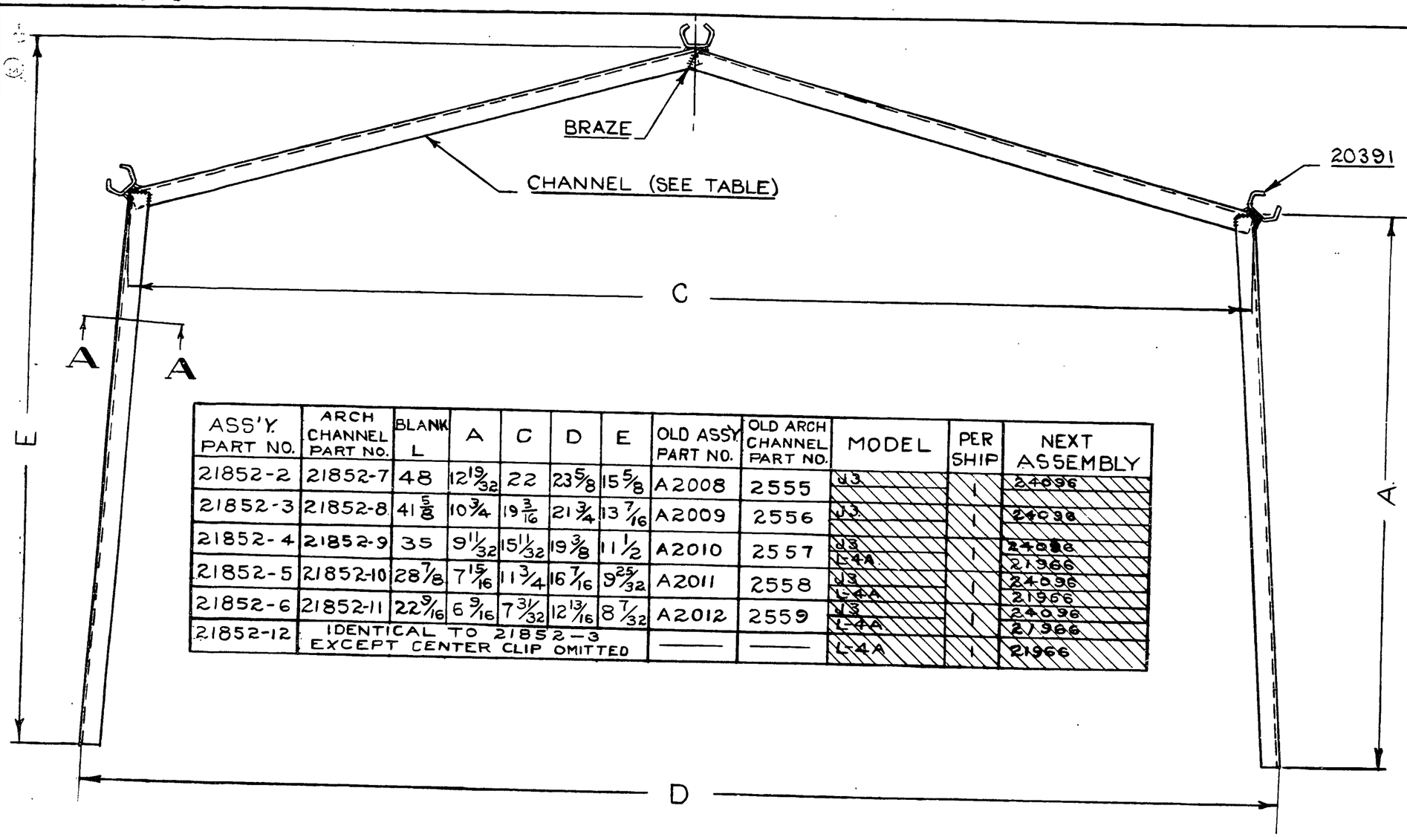



SECTION A-A
FULL SIZE

ASS'Y. PART NO.	ARCH CHANNEL PART NO.	BLANK L	A	C	D	E	OLD ASS'Y PART NO.	OLD ARCH CHANNEL PART NO.	MODEL	PER SHIP	NEXT ASSEMBLY
21852-2	21852-7	48	12 19/32	22	23 5/8	15 5/8	A2008	2555	J3	1	24096
21852-3	21852-8	41 5/8	10 3/4	19 3/16	21 3/4	13 7/16	A2009	2556	J3	1	24096
21852-4	21852-9	35	9 11/32	15 11/32	19 3/8	11 1/2	A2010	2557	J3 L-4A	1	24096 21966
21852-5	21852-10	28 7/8	7 15/16	11 3/4	16 7/16	9 25/32	A2011	2558	J3 L-4A	1	24096 21966
21852-6	21852-11	22 9/16	6 9/16	7 31/32	12 13/16	8 7/32	A2012	2559	J3 L-4A	1	24096 21966
21852-12	IDENTICAL TO 21852-3 EXCEPT CENTER CLIP OMITTED						—	—	L-4A	1	21966

LIMITS, SHOP PRACTICES AND FINISH. UNLESS OTHERWISE NOTED, TO BE IN ACCORDANCE WITH PIPER SPECIFICATIONS #9 AND #10.

PART No.	No. REQ.	SIZE	DESCRIPTION / MATERIAL
84501	DWG REF. ONLY	CHANNEL SECTION	
20391	3	CLAMP	
NOTED	NOTED	NOTED	PIPER SECTION 84501-2

SCALE 6 IN.=1 FT. & NOTED — TOTAL WT.-LBS.
FINISH

LET.	REVISION	DATE	BY
L	19 3/16 WAS 18 5/16 FOR C ON -3	1-17-46	L.R.
K	41 5/8 WAS 40 3/4 FOR L ON -3	1-17-46	L.R.
J	REDRAWN & REVISED	1-24-44	I.M.

MODEL	PER SHIP	NEXT ASSEMBLY	SUPERSEDES	SUP. BY
NOTED	NOTED	NOTED		

PIPER AIRCRAFT CORP.
LOCK HAVEN, PENNA.

ARCH ASSEMBLY — #3, #4, #5, #6, #7 TURTLEDECK

DRAWN	CHECKED	APPROVED
I. McNERNEY 1-24-44	C.K. 1-24-44	

21852

621

A621

WAS A2013
D2150-C

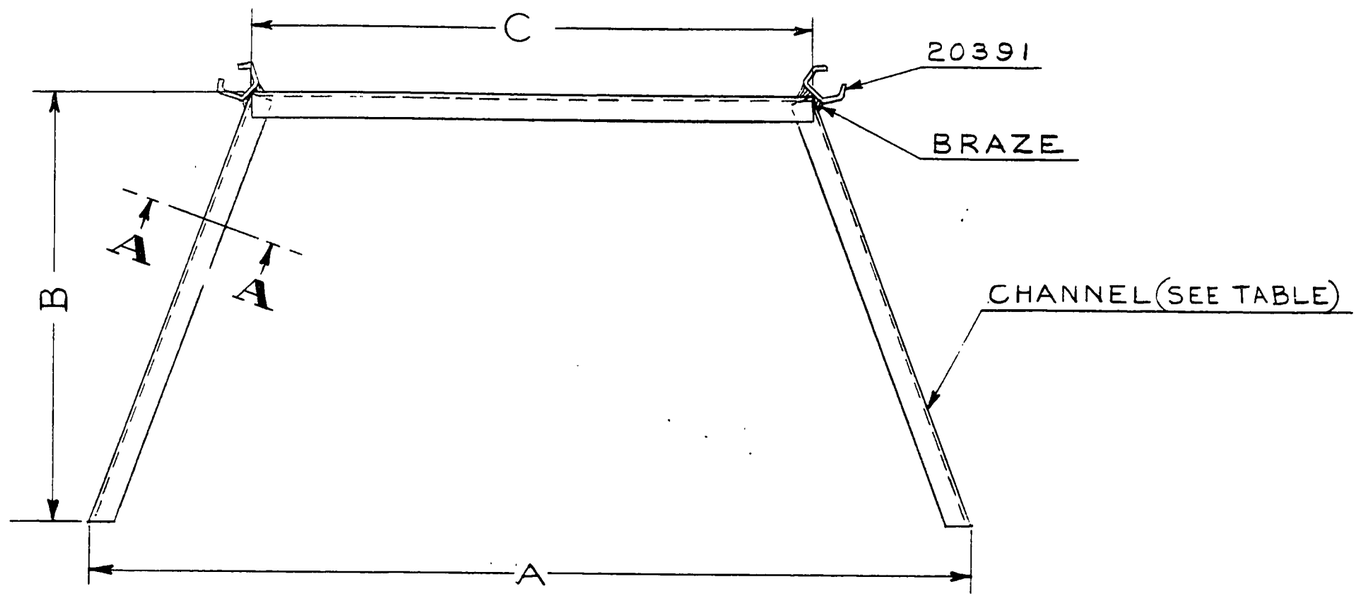



SECTION A—A
FULL SIZE

ASSY. PART NO.	ARCH CHANNEL PART NO.	BLANK L.	A	B	C	
21861	21861-2	16	7 3/4	5 3/4	4	
21861-3	21861-4	20 7/8	12 3/4	5 7/8	8 1/8	
21861-5	21861-6	25 3/4	16 7/16	6 1/2	11 3/4	
21861-7	21861-8	31 1/8	19 1/4	7 1/2	15 1/2	
21861-9	21861-10	40 5/16	21 3/4	10 1/8	19 13/16	

THIS DRAWING IS THE PROPERTY OF THE PIPER AIRCRAFT CORP. AND ITS POSSESSION BY UNAUTHORIZED PERSONS SHALL NOT BE CONSTRUED AS PERMISSION TO REPRODUCE FOR SALE, IN WHOLE OR IN PART, ANY DEVICES SHOWN THEREON

LET.	REVISION	DATE	BY
E	REDRAWN & REVISED	3-20-51	I.M.M.

MODEL	PER PLANE	NEXT ASSEMBLY	SUPERSEDES	SUP. BY

PIPER AIRCRAFT CORP.
LOCK HAVEN, PENNA.

PART No.	No. REQ.	SIZE	DESCRIPTION / MATERIAL
84501	DWG REF. ONLY		CHANNEL SECTION
20391	2		CLAMP
NOTED	NOTED	NOTED	PIPER SECTION 84501-2

SCALE 6 IN. = 1 FT. & NOTED | TOTAL WT.—LBS.
FINISH—PIPER SPECIFICATION #10
MANUFACTURING PRACTICES—PIPER SPECIFICATION #9

ARCH ASSEMBLY —
TURTLEDECK

DRAFTSMAN	CHECKER	STANDARDS
I.M.M. 3-20-51	H.R.K. 3-21-51	

21861

622

A622

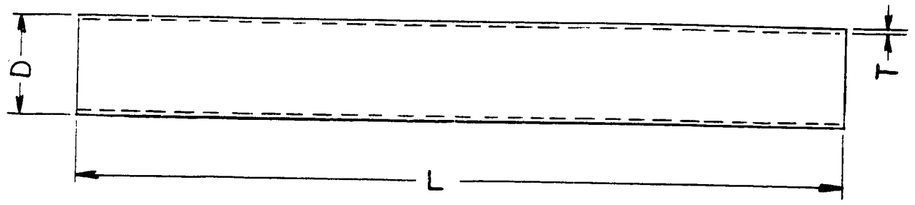

PART NO.	D	T	L	MATERIAL	REMARKS
22102-2	3/4	.035	73 3/4	#4130 STEEL	WAS 20875-5
22102-3	3/4	.035	120 3/4	#1025 STEEL	WAS 20875-6
22102-4	3/4	.035	151 3/8	#1025 STEEL	WAS 20875-8
22102-5	5/8	.035	3 5/16	#1025 STEEL	WAS 20875-42
22102-6	3/8	.028	8	#1025 STEEL	WAS 20875-83
22102-7	1/2	.028	15 7/16	#1025 STEEL	WAS 20875-12
22102-8	1/2	.028	2 3/16	#1025 STEEL	WAS J2-2000
22102-9	1/2	.028	15 9/16	#1025 STEEL	

NOTE: BLANK LENGTHS SHOWN.
ENDS CUT OR NIBBLED TO FIT.

LET	REVISION	DATE	BY
N	REDRAWN & REVISED	6-21-51	M.G.

MODEL | PER PLANE | NEXT ASSEMBLY | SUPERSEDES | SUP. BY

THIS DRAWING IS THE PROPERTY OF THE PIPER AIRCRAFT CORP. AND ITS POSSESSION BY UNAUTHORIZED PERSONS SHALL NOT BE CONSTRUED AS PERMISSION TO REPRODUCE FOR SALE IN WHOLE OR IN PART ANY DEVICES SHOWN THEREON.

PIPER AIRCRAFT CORP.
LOCK HAVEN, PENNA.

PART NO. | NO. REQ. | MATERIAL

SCALE | TOTAL WT.—LBS.

FINISH—PIPER SPECIFICATION # 10

MANUFACTURING PRACTICES—PIPER SPECIFICATION # 5

TUBES - FUSELAGE

DRAFTSMAN	CHECKER	STANDARDS
M.W.G. 6-21-51	I.E.M. 6-28-51	

22102

623

A623

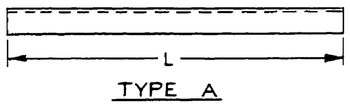

TYPE A

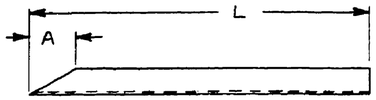

TYPE B

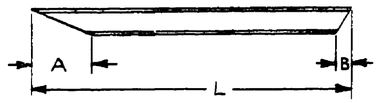

TYPE C

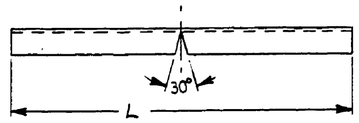

TYPE D

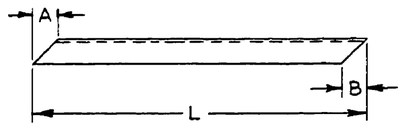

TYPE E

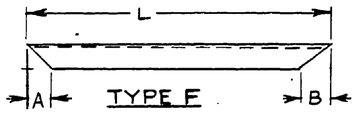

TYPE F

PART NO.	TYPE	L	A	B	MODEL	NEXT ASSEMBLY
22212-2	A	3 3/8	—	—	J5C	
22212-3	A	4	—	—	J5C	24066
22212-4	A	5	—	—	J5C	24066
22212-5	B	3 1/32	1/4	—	J5C	24066
22212-6	B	1 15/16	5/8	—	J5C	24066
22212-7	B	1	1/4	—	J5C	24066
22212-8	A	1	—	—	J5C	24066
22212-9	A	1/2	—	—	J5C	20138
22212-10	A	3 1/2	—	—		
22212-11	A	5/8	—	—	J3	21671
			—	—	J5C	24066
22212-12	A	1 1/2	—	—		
22212-13	B	2 9/16	1/4	—		
22212-14	A	3 5/8	—	—		
22212-15	A	2 13/16	—	—	J5C	24066
22212-16	C	14 7/8	5/8	5/32	J5C	24066
22212-17	A	2	—	—	J5C	24066
22212-18	A	2 1/4	—	—	J5C	24066
22212-19	A	7 1/4	—	—		
22212-20	A	4 5/8	—	—	J5C	24066
22212-21	A	7 1/2	—	—		
22212-22	A	8 3/16	—	—	J3	24096
22212-23	A	7 7/16	—	—	J3	24096
22212-24	A	7 1/8	—	—	J3	24096
22212-25	A	6 7/8	—	—		
22212-26	A	7 1/4	—	—		
22212-27	B	11 1/8	1/4	—	J3	24096
22212-28	A	11 1/2	—	—	J3	24096
22212-29	A	3 1/4	—	—	J3 & J5C	24096, 24066
22212-30	A	9 3/4	—	—	J3	24096
22212-31	D	33 3/4	—	—	J5C	24066
22212-32	A	1 3/8	—	—		
22212-33	A	2 9/16	—	—	J5C	24066
22212-34	A	6	—	—		
22212-35	A	31	—	—		
22212-36	A	14 1/2	—	—		
22212-37	A	11 3/4	—	—		
22212-38	A	22 1/4	—	—		

PART NO.	TYPE	L	A	B	MODEL	NEXT ASSEMBLY
22212-39	A	17 1/2	—	—		
22212-40	A	7/8	—	—		
22212-41	A	3/4	—	—		
22212-42	A	4 3/8	—	—	J5C	24066
22212-43	A	9 1/4	—	—	J3	24096
22212-44	A	5/8	—	—	J3	24096
22212-45	C	14 7/8	5/32	5/8	J5C	24066
22212-46	A	4 1/4	—	—		
22212-47	A	2 3/8	—	—		
22212-48	E	2 3/4	1/4	1/4		
22212-49	B	6 1/2	1/2	—		
22212-50	B	6	1/2	—		
22212-51	B	3 1/4	1/8	—		
22212-52	A	2 1/8	—	—		
22212-53	A	1 15/16	—	—		
22212-54	F	1 1/8	1/4	1/4		
22212-55	B	8	1/2			
22212-56	A	1 1/8	—	—		
22212-57	F	1 3/16	1/4	1/4		
22212-58	F	3	3/8	1/8		
22212-59	A	1 3/4				
22212-60	B	3 5/8	1/4			
22212-61	F	13 11/16	1/4	3/8		
22212-62	A	19 1/2				
22212-63	B	4 1/2	3/16			
22212-64	B	2 3/8	1/4			
22212-65	A	1 1/4	—			

PART NO.	TYPE	L	A	B	MODEL	NEXT ASSEMBLY

LET.	REVISION	DATE	BY
AW	-63, -64, -65 ADDED; B WAS A 2 3/16, WAS 1 1/4 ADD FOR 'A' FOR-13; F WAS B, 1 7/16 WAS 1 5/16, 1/4 WAS 5/16 ADD FOR 'B' FOR-57; F WAS C, 5/8 WAS 10 3/4, 3/8 WAS 1/4 FOR-61	6-9-49	R.D.R.
AV	-62 ADDED	5-25-49	C.K.
LET.	REVISION	DATE	BY

LET.	REVISION	DATE	BY
AU	-61 ADDED	3-23-49	RM.
AT	-59, -60 ADDED	2-2-49	RM.
AS	-57, -58 ADDED	1-4-49	RM.
AR	-56 ADDED	2-27-48	HRK
AQ	-55 ADDED	2-17-48	RM.
AP	-54 ADDED	1-15-48	RM.
AO	-52 & -53 ADDED	9-8-47	RC
AN	-50 & -51 ADDED	5-27-47	R.D.R.
AM	TYPE 'E' ADD. -46, -47, -48 & -49 ADD	5-7-47	T.N.K.
AL	J3 MODEL REF. CAN. FOR-29	9-11-46	I.M.M.
AK	1/4 WAS 5/16 FOR 'A' ON -5	8-15-46	I.D.B.
AJ	J5C MODEL REF. CAN. FOR -3	6-18-46	E.L.N.
AH	REDRAWN & REVISED	5-23-46	HMZ

THIS DRAWING IS THE PROPERTY OF THE PIPER AIRCRAFT CORP. AND ITS POSSESSION BY UNAUTHORIZED PERSONS SHALL NOT BE CONSTRUED AS PERMISSION TO REPRODUCE FOR SALE, IN WHOLE OR IN PART. ANY DEVICES SHOWN THEREON

MODEL	PER PLANE	NEXT ASSEMBLY	SUPERSEDES	SUP. BY
NOTED	NOTED	NOTED		

PIPER AIRCRAFT CORP.
LOCK HAVEN, PENNA.

HMZ	R.E.T.		
5-23-46	6-3-46		
DRAFTSMAN	CHECKER	STANDARDS	

84511	DWG. REF. ONLY	CHANNEL	
	NOTED	PIPER SECTION 84511	
	NO. REQ.	SIZE	DESCRIPTION
PART NO.		MATERIAL	
SCALE		TOTAL WT.—LBS.	

FINISH—PIPER SPECIFICATION #10

MANUFACTURING PRACTICES—PIPER SPECIFICATION #9

CHANNEL- 1/4
SUPERSTRUCTURE (SHEET 2)

22212

900

A800

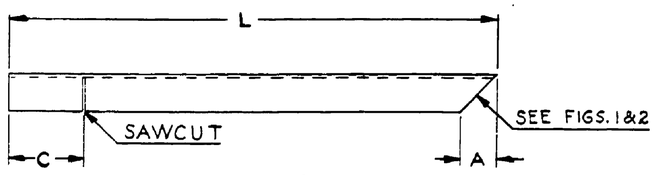

TYPE 1

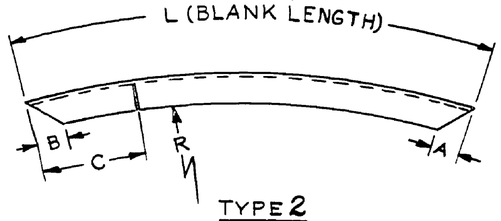

TYPE 2

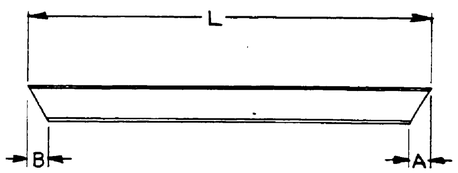

TYPE 3

PART NO.	TYPE	L	A	B	C	R	OLD PART
22222-2	1	25½					2437
22222-3	1	2					2402
22222-4	1	56 3/8					2422
22222-5	1	35½					2454
22222-6	1	14 3/8	3/8				
22222-7	1	1 3/4					2467
22222-8	1	13 3/8					2439
22222-9	1	27¼					2440
22222-10	1 (SEE FIG.)	15/16					2404, 21934-14
22222-11	1	5/8					2664
22222-12	1	1¼					2460
22222-13	1	7/8					2475
22222-14	1	9	4				2400
22222-15	1	2½					20133-2
22222-16	1	23					20133-3
22222-17	1	18½					2456
22222-18	1	24½					J3-2005
22222-19	2	16 29/32			21/32	141/32	J3-2036
22222-20		24					J3-297
22222-21	2	22 9/16	3/8	3/8		44⅛	J2-2008
22222-22	SEE FIG.3	10½					J3-2018
22222-23	SEE FIG.4	62					J3-2001
22222-24	1	32 11/16					J3-2007
22222-25	1	7⅛					2218
22222-26	1 (SEE FIG.2)	1 3/8					J2-2007

PART NO.	TYPE	L	A	B	C	R	OLD PART
22222-27	2	15½			½	120¼	J2-2004
22222-28	1	7 13/16					J3-2014
22222-29	1	12 5/8	3/8				J2-2009
22222-30	2	23½	3/8	7/8		276½	J2-2005
22222-31	1 (SEE FIG.1)	10 5/16	3/8				21934-4
22222-32	1	15 7/8					21934-5
22222-33	1	12¾					21934-6
22222-34	1	10½					21934-7
22222-35	3	18 7/8	3/8	3/8			21934-8
22222-36	1	2¾			¾		21934-13
22222-37	1	6					21882-3
22222-38	2	19 3/8				62	
22222-39	SEE FIG.4	55 7/8					
22222-40	THIS PART NO. OBSOLETE. SEE DWG. OF SAME NO. DATED 10-13-42						
22222-41		18¼					
22222-42	1	½					2464
22222-43	1	5/8					2431 & 2462
22222-44	1	7½					2405
22222-45	SEE FIG.3	10½					J3-2018
22222-46	3	1¼	3/8				2460
22222-47	3	11	3/32	3/32			
22222-48	1	7¼					
22222-49	1	9½					
22222-50	1	22					
22222-51	1	19⅛					

PART NO.	TYPE	L	A	B	C	R	OLD PART
22222-52	1	4¼					
22222-53	1	9⅛					
22222-54	1	21¾					
22222-55	1	61 3/8					
22222-56	1	8 7/8	5/8				
22222-57	3	22 3/16	3/16	3/16			
22222-58	3	14 3/8	3/16				
22222-59	3	7 5/8		3/8			
22222-60	2	17 3/4				142	
22222-61	2	17½				142	
22222-62	3	24 1/16		5/16			
22222-63	3	10 3/8		¼			
22222-64	2	17⅛	5/16			98	
22222-65	SEE FIG.5	11 5/16	¼	¼			
22222-66	1	3					
22222-67	2	12 3/4				142	
22222-68	2	9½				142	
22222-69	1	2 7/8					
22222-70	1	14 13/16					
22222-71	1	4	3/8				
22222-72	1	1 7/8					
22222-73	1	12½	3/8		8¾		
22222-74	1	1 3/16					
22222-75	2	36				142	

PART NO.	TYPE	L	A	B	C	R	OLD PART

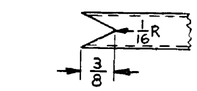

END DETAIL OF -31 ONLY

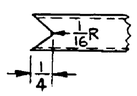

END DETAIL OF -10 ONLY

FIGURE 1

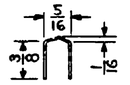

FIGURE 2
CROSS SECTION OF -26 ONLY FULL SIZE

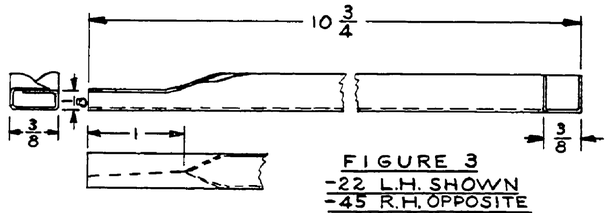

FIGURE 3
-22 L.H. SHOWN
-45 R.H. OPPOSITE

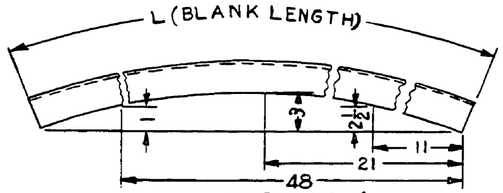

FIGURE 4
DETAIL OF -23, -39 ONLY

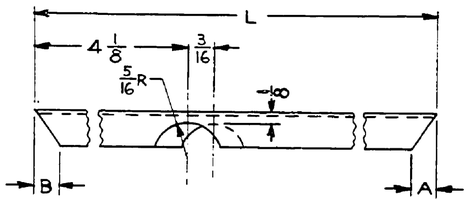

FIG. 5



TYP. SECTION
FULL SIZE

NOTE:
SEE ALSO DWG. 22762 & 12590

THIS DRAWING IS THE PROPERTY OF THE PIPER AIRCRAFT CORP. AND ITS POSSESSION BY UNAUTHORIZED PERSONS SHALL NOT BE CONSTRUED AS PERMISSION TO REPRODUCE FOR SALE, IN WHOLE OR IN PART, ANY DEVICES SHOWN THEREON

LET.	REVISION	DATE	BY
AA	REDRAWN & REVISED	6-12-51	C.K.

MODEL	PER PLANE	NEXT ASSEMBLY	SUPERSEDES	SUP. BY

PIPER AIRCRAFT CORP.
LOCK HAVEN, PENNA.

84501	REF	CHANNEL SECTION
	NOTED	PIPER SECTION 84501-2
PART NO.	No. REQ.	SIZE / DESCRIPTION
		MATERIAL
SCALE		TOTAL WT.—LBS.

FINISH—PIPER SPECIFICATION #10
MANUFACTURING PRACTICES—PIPER SPECIFICATION #9

CHANNEL — 0K3 SUPERSTRUCTURE (SHEET 1)

C. E. K.	H. R. K.		22222
6-12-51	6-22-51		
DRAFTSMAN	CHECKER	STANDARDS	

EC1

A801

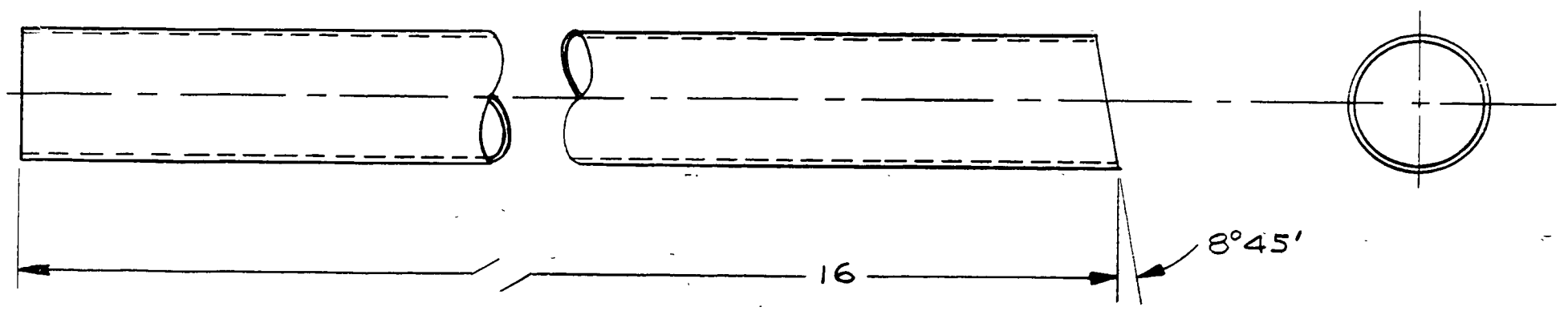



PART NO.	NO. REQ.	SIZE	DESCRIPTION / MATERIAL
		7/8 x .049 x 16	4130 STEEL

SCALE FULL SIZE | TOTAL WT.—LBS.

FINISH—PIPER SPECIFICATION # 10

MANUFACTURING PRACTICES—PIPER SPECIFICATION # 9

TAILPOST

MODEL	PER PLANE	NEXT ASSEMBLY	SUPERSEDES	SUP. BY
HE-1	1	22412		
J-4, J-5	1	20012		
J-50, J-50	1	22412		
J-3, J-3C	1	20012		
L-14	1	22412		

THIS DRAWING IS THE PROPERTY OF THE PIPER AIRCRAFT CORP. AND ITS POSSESSION BY UNAUTHORIZED PERSONS SHALL NOT BE CONSTRUED AS PERMISSION TO REPRODUCE FOR SALE IN WHOLE OR IN PART ANY DEVICES SHOWN THEREON.

LET	REVISION	DATE	BY
B	REDRAWN WITHOUT CHANGE	6-20-51	C.B.
A	L-14 MODEL REF. ADDED	7-3-45	I.D.B.

PIPER AIRCRAFT CORP.
LOCK HAVEN, PENNA.

DRAFTSMAN	CHECKER	STANDARDS
M.G.S. 4-8-42	C.F.S. 4-13-42	

22401

252

A 252

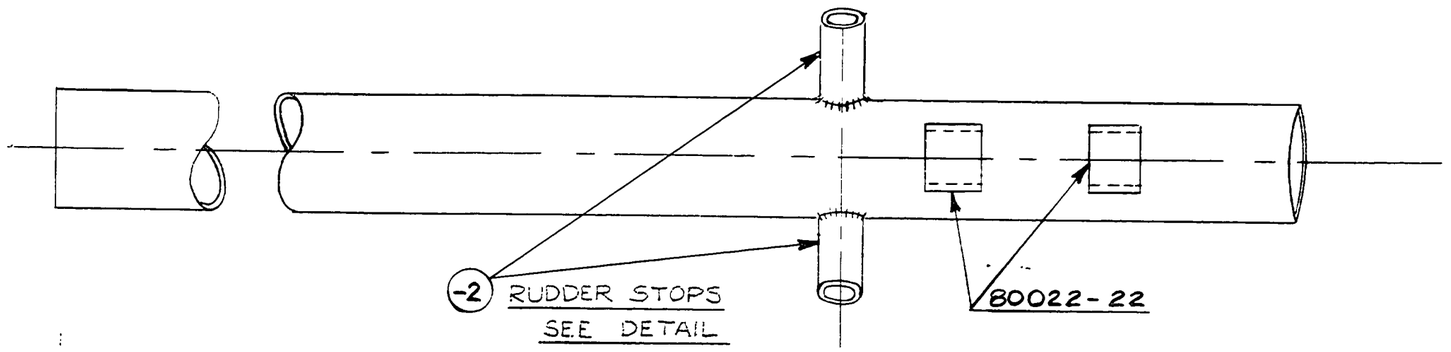

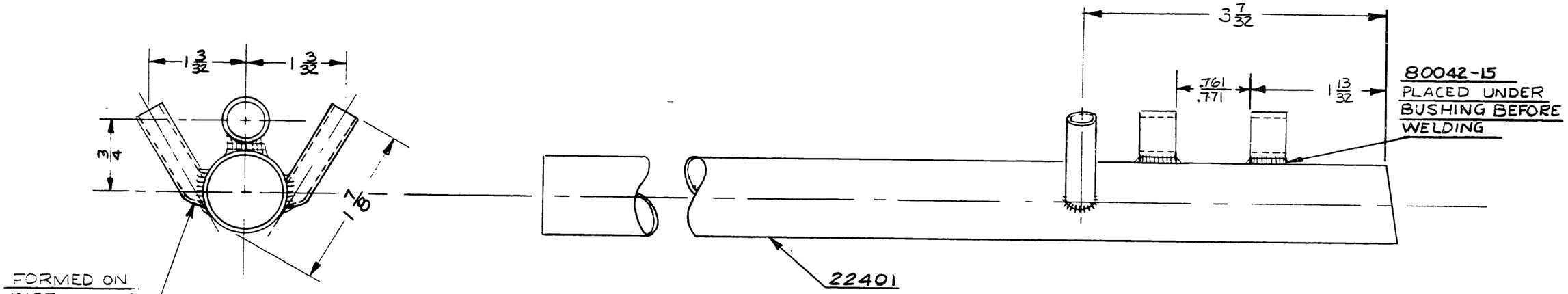

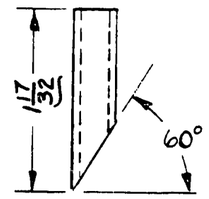

-2 DETAIL

PART NO.	NO. REQ.	SIZE	MATERIAL / DESCRIPTION
22401	1		TAILPOST
80022-22	2		BUSHING
80042-15	2		PLATE
-2	2	5/16 x .058 x 1 17/32	#1025 STEEL

SCALE FULL SIZE | TOTAL WT.—LBS.

FINISH—PIPER SPECIFICATION # 10

MANUFACTURING PRACTICES—PIPER SPECIFICATION # 9

TAILPOST ASSEMBLY

LET	REVISION	DATE	BY
L	REDRAWN & REVISED	6-21-51	C.B.

MODEL	PER PLANE	NEXT ASSEMBLY	SUPERSEDES	SUP. BY

THIS DRAWING IS THE PROPERTY OF THE PIPER AIRCRAFT CORP. AND ITS POSSESSION BY UNAUTHORIZED PERSONS SHALL NOT BE CONSTRUED AS PERMISSION TO REPRODUCE FOR SALE IN WHOLE OR IN PART ANY DEVICES SHOWN THEREON.

PIPER AIRCRAFT CORP.
LOCK HAVEN, PENNA.

DRAFTSMAN	CHECKER	STANDARDS
C. BOATMAN 6-21-51	H. R. K. 6-22-51	

22412

C24

A624

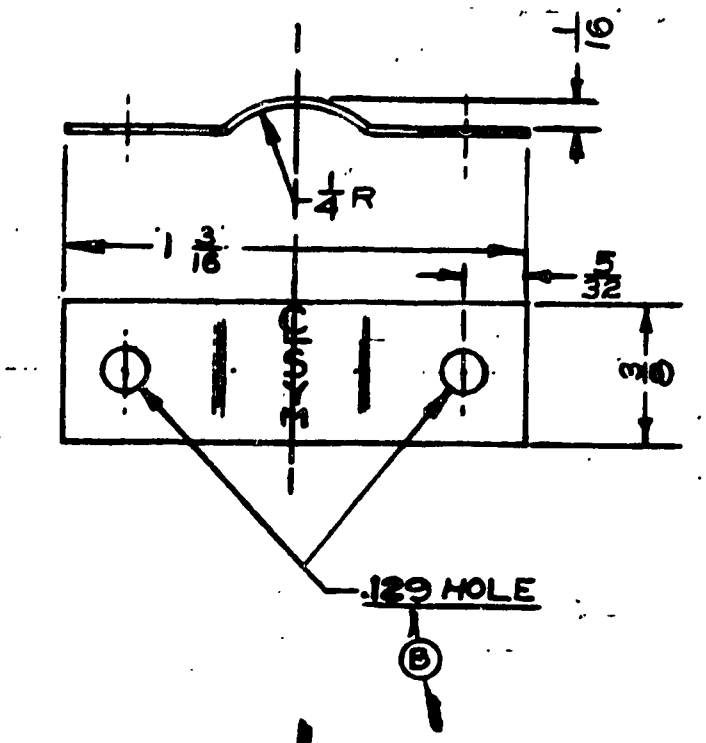

Limits and shop practices, unless otherwise noted, to be in accordance with Piper Specification #9 & #10

PART No.	No. REQ.	SIZE	DESCRIPTION
		.032 × 3/8" × 1 1/4"	#1025 STEEL
		MATERIAL	

SCALE 2 × SIZE

STRAP- LOCK SEAM REINFORCEMENT

LET.	REVISION	DATE	SR.	BY
F	#10691 FOR J5C WAS 24275	7-30-41		J.E.H.
E	J5C MODEL REF. ADDED	1-24-45		I.M.M.
D	L-4A N. A24243 WAS 23813	6-26-43		I.M.M.
C	J3 NEXT ASSY 23993 WAS 22443	10-4-43		R.R.F.
B	.129 HOLE WAS .128 HOLE	3-29-43		C.E.K.
A	L-4A NEXT ASSY. WAS 22443	3-29-43		C.E.K.

MODEL	PER SHIP	NEXT ASSEMBLY	SUPERSEDES	SUPERSEDED BY
J5C	1	10691		
L-4B	1	22443		
L-4A	1	24243		
J3	1	23993		

PIPER AIRCRAFT CORP.
LOCK HAVEN, PENNA.

DRAWN	CHECKED	APPROVED
M.G.S. 4-10-42	C.F.S. 4-20-42	

22431

253

A 253

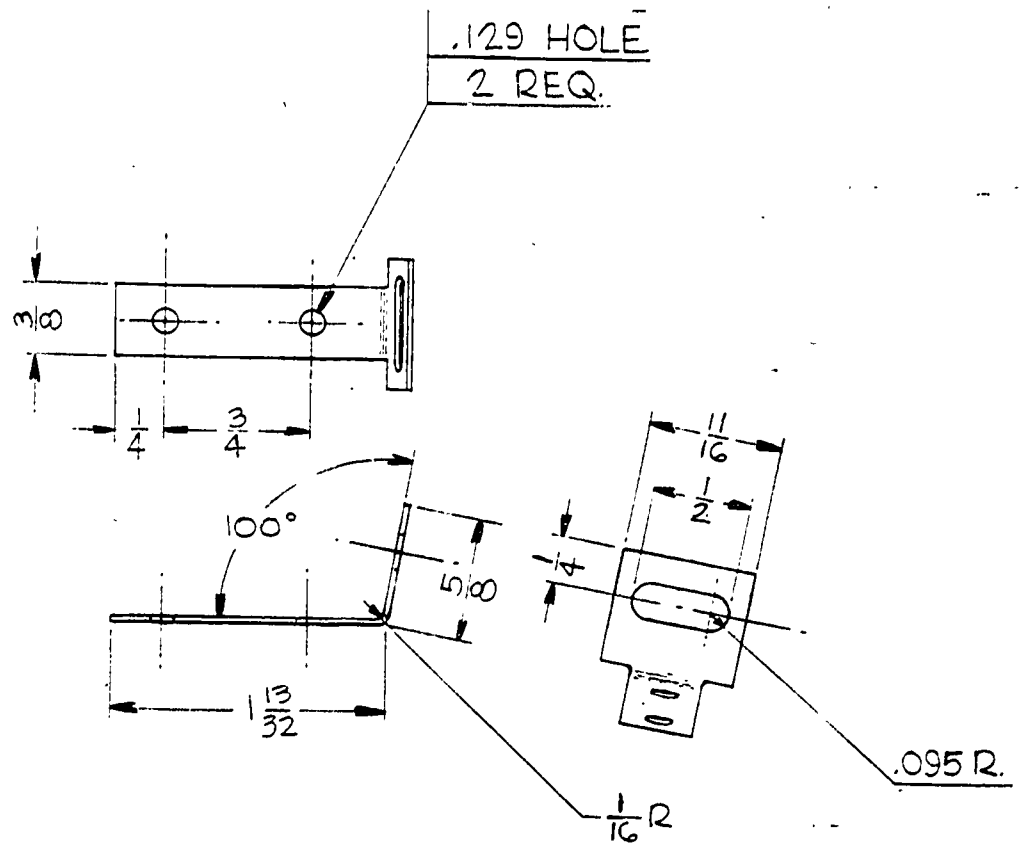

PART No.	No. REQ.	SIZE	DESCRIPTION
		.032 x 1 1/16 x 2	#1025 STL.
		MATERIAL	

SCALE FULL SIZE — TOTAL WT.-LBS.

FINISH—PIPER SPECIFICATION #10

MANUFACTURING PRACTICES—PIPER SPECIFICATION #9

CLIP— INSTRUMENT PANEL

LET.	REVISION	DATE	BY
K	REDRAWN & REVISED	4-5-51	M.G.

MODEL	PER PLANE	NEXT ASSEMBLY	SUPERSEDES	SUP. BY

THIS DRAWING IS THE PROPERTY OF THE PIPER AIRCRAFT CORP. AND ITS POSSESSION BY UNAUTHORIZED PERSONS SHALL NOT BE CONSTRUED AS PERMISSION TO REPRODUCE FOR SALE, IN WHOLE OR IN PART. ANY DEVICES SHOWN THEREON.

PIPER AIRCRAFT CORP.
LOCK HAVEN, PENNA.

DRAFTSMAN	CHECKER	STANDARDS
M.W.G. 4-5-51	H.R.K. 4-9-51	

22471

254

A254

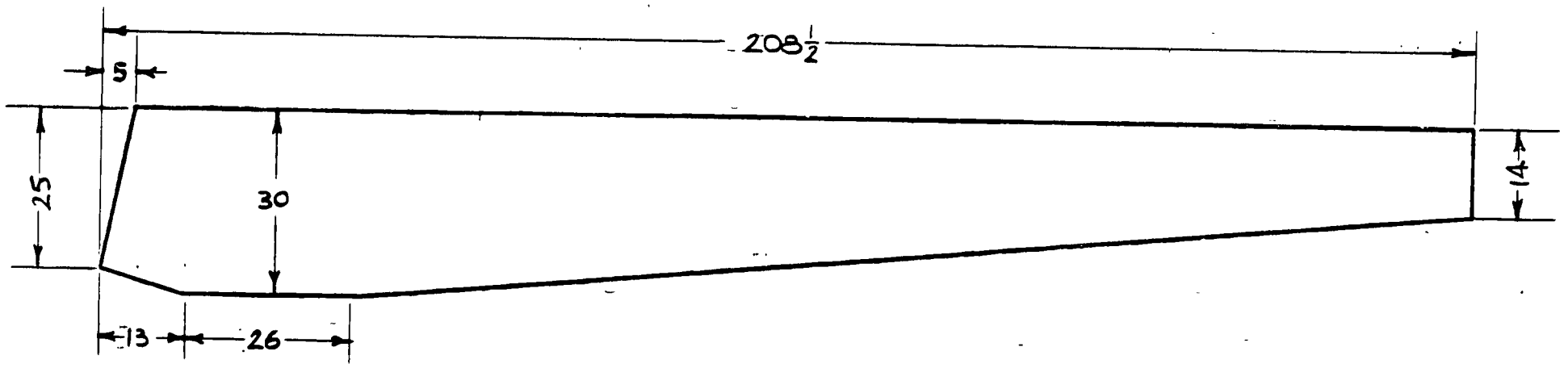

NOTE:
WARP OF COVERING FABRIC SHALL PARALLEL DRAG FORCE

(E)

LIMITS, SHOP PRACTICES AND FINISH, UNLESS OTHERWISE NOTED, TO BE IN ACCORDANCE WITH PIPER SPECIFICATIONS #9 AND #10.

(F) (H)

LET	REVISION	DATE	BY
H	ALTERNATE FABRIC SPEC. ADDED	3-3-50	H.R.K
G	ALTERNATE FABRIC SPEC. REM.	10-28-46	I.D.B.
F	ALTERNATE SPEC. ADDED	3-25-46	L.R.
E	L-4A NEXT ASSY. 24235 WAS 23865	6-24-44	JBM
D	RE-DRAWN & REVISED	11-8-43	L.R.

MODEL	PER SHIP	NEXT ASSEMBLY	SUPERSEDES	SUP. BY
J3	2	24165		
L-4A	2	24236		

PIPER AIRCRAFT CORP.
LOCK HAVEN, PENNA.

PART No.	NO. REQ.	SIZE	DESCRIPTION / MATERIAL
		30 × 208 ½	FABRIC-SAE SPEC. AMS 3804 OR AMS 3806 G

SCALE ½" = 1' | TOTAL WT.- LBS.
FINISH

FABRIC-FUSELAGE SIDE

DRAWN	CHECKED	APPROVED
L.R. 11-8-43	C.K. 12-1-43	

22481

G

255

A 255

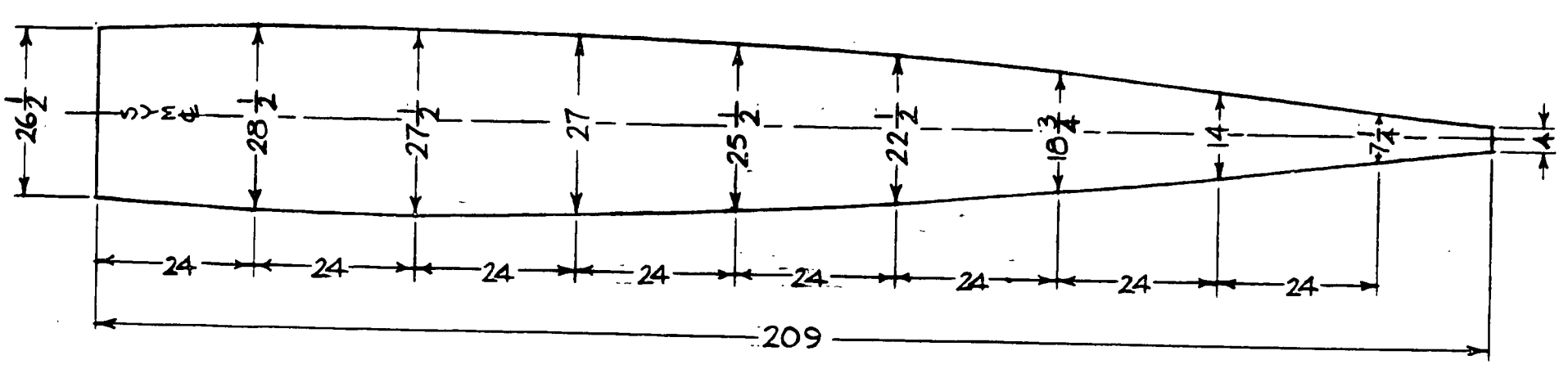

NOTE:
WARP OF COVERING FABRIC SHALL PARALLEL DRAG FORCE

(F) (D) (G) (E) (J)

LIMITS, SHOP PRACTICES AND FINISH. UNLESS OTHERWISE NOTED, TO BE IN ACCORDANCE WITH PIPER SPECIFICATIONS #9 AND #10.

LET	REVISION	DATE	BY
J	ALTERNATE FABRIC SPEC. ADDED	3-3-50	HRK
H	ALTERNATE FABRIC SPEC REM.	10-28-46	L.D.B
G	ALTERNATE SPEC. ADDED	3-25-46	L.R.
F	L-4A NEXT ASS'Y 24235 WAS 23865	6-24-44	J.B.M.
E	FABRIC SPEC. REVISED	12-7-43	L.R.
D	J3 NEXT ASSY. 24165 WAS 23563	11-15-43	J.C.
C	REDRAWN & REVISED	10-27-43	L.R.

MODEL	PER SHIP	NEXT ASSEMBLY	SUPERSEDES	SUP. BY
J3	1	24165		
L-4A	1	24235		

PIPER AIRCRAFT CORP.
LOCK HAVEN, PENNA.

PART No.	No. REQ.	SIZE	DESCRIPTION / MATERIAL
		28½ × 209	FABRIC-SAE SPEC. #AMS 3804 OR #AMS 3806

SCALE ½" = 1FT. TOTAL WT.- LBS.
FINISH

FABRIC-FUSLAGE BOTTOM

DRAWN	CHECKED	APPROVED
L.R. 10-27-43	C.K. 10-28-43	

22491

H

256

A256

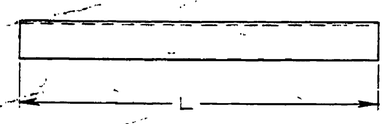

TYPE 1

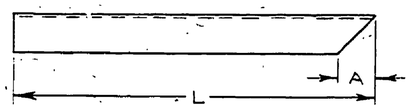

TYPE 2

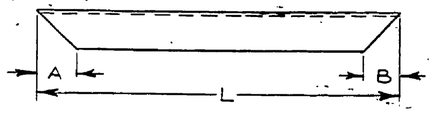

TYPE 3

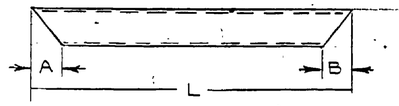

TYPE 7

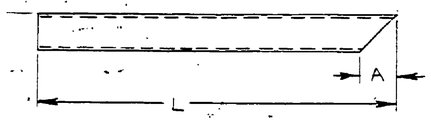

TYPE 4

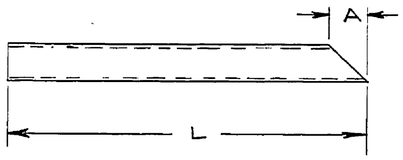

TYPE 5

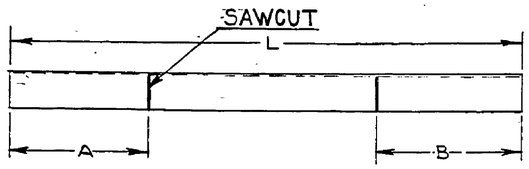

TYPE 6

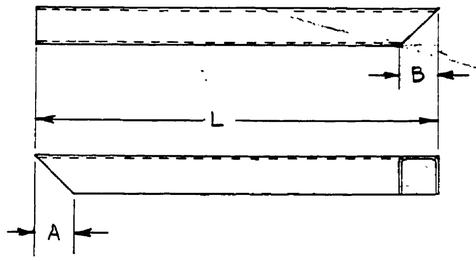

TYPE 8

PART NO.	L	TYPE	A	B	REMARKS
22762-2	6 3/4	2	3/8		
22762-3	3 7/8	1			
22762-4	12 3/8	1			
22762-5	11 1/2	1			
22762-6	55 1/2	1			
22762-7	24	1			
22762-8	48 1/2	1			
22762-9	23 3/4	1			
22762-10	41 1/4	1			
22762-11	33	1			
22762-12	25 3/4	1			
22762-13	18 3/8	1			
22762-14	14 1/4	1			
22762-15	2 3/4	1			
22762-16	35	1			
22762-17	22 1/2	1			
22762-18	4	1			
22762-19	5 1/4	2	3/8		
22762-20	9	1			
22762-21	12 1/8	1			
22762-22	11 3/8	1			
22762-23	1	1			
22762-24	1 5/8	2	3/8		
22762-25	15 1/4	3	3/8	1/4	
22762-26	15	2	1/2		
22762-27	2 5/16	2	3/8		
22762-28	2 1/16	2	3/8		
22762-29	1 3/8	2	3/8		
22762-30	25 7/16	3	3/8	3/8	WAS 21346-44
22762-31	3	3	3/8	3/8	
22762-32	17 3/4	1			
22762-33	17 1/2	1			
22762-34	9 1/4	2	3/8		
22762-35	14 1/2	1			
22762-36	13/16	1			
22762-37	3/4	1			

PART NO.	L	TYPE	A	B	REMARKS
22762-38	22	1			WAS 20875-56
22762-39	19 1/2	1			WAS 20875-57
22762-40	6 5/16	2	1 3/4		
22762-41	5 7/8	2	1 5/16		
22762-42	26 3/8	1			
22762-43	21 3/4	2	1		
22762-44	17 3/16	2	3/8		
22762-45	2 1/4	1			
22762-46	8 1/4	1			
22762-47	8 5/8	1			
22762-48	16 1/2	2	6 1/4		
22762-49	10 5/16	1			
22762-50	6 3/4	1			
22762-51	4 5/8	1			
22762-52	1 1/8	3	5/16	5/16	
22762-53	33 3/8	1			
22762-54	23 1/4	2	2		
22762-55	10	2	2 3/4		
22762-56	14 3/8	5	3/16		
22762-57	5 1/4	1			
22762-58	6 5/8	1			
22762-59	1 1/2	1			
22762-60	1 1/8	1			
22762-61	2	4	1/2		
22762-62	2	5	1/2		
22762-63	14 3/8	3	1/4	1/4	
22762-64	56	1			
22762-65	32	1			
22762-66	2 1/4	1			
22762-67	18 1/8	7	1/4	3/4	
22762-68	18 1/8	7	3/4	1/4	
22762-69	16	1			
22762-70	3 7/16	2	3/8		
22762-71	3 1/4	2	3/8		
22762-72	7	3	3	1 1/4	
22762-73	5 3/8	4	1/4		

PART NO.	L	TYPE	A	B	REMARKS
22762-74	15 5/8	2	2		
22762-75	11 1/2	3	1/4	1/4	
22762-76	3 1/2	1			
22762-77	14 3/4	2	3/8		
22762-78	13 3/4	3	3/8	3/8	
22762-79	11 5/16	8	1/4	5/16	
22762-80	2 3/4	1			
22762-81	3 1/8	2	3/8		
22762-82	7 1/8	2	3/8		
22762-83	4 1/2	3	3/8	3/8	
22762-84	12	2	3/8		
22762-85	7 1/4	2	3/8		
22762-86	21 1/8	2	1/4		
22762-87	4 1/2	1			
22762-88	4 3/8	L			
22762-89	5 3/4	1			
22762-90	24 1/8	6	12 1/16		
22762-91	11 7/8	1			
22762-92	31 1/2	1			
22762-93	6 13/16	3	1/4	1/4	
22762-94	20 3/4	3	3/8	3/8	
22762-95	10	1			
22762-96	23 1/2	2	2		
22762-97	6 7/16	1			
22762-98	15 7/16	7	5/16	3/16	
22762-99	15 7/16	7	3/16	5/16	

SEE ALSO DWG. 22222 & 12590

LET	REVISION	DATE	BY
BG	3 7/8 WAS 3 3/4 FOR-3; 5/8 WAS 5/16 FOR-69	4-12-50	C.K.
BF	TYPE 6 WAS TYPE 1; 12 1/8 ADDED FOR-90	2-24-50	C.K.
BE	6 7/16 WAS 6 5/8 FOR-97.	2-1-50	J.A.Y.
BD	7/4 WAS 1 1/2, 2 WAS 5, 3/4 WAS 1/2 FOR-82, 3/4 WAS 10 WAS 3/4 ADDED FOR-83	2-6-49	K.D.
BC	-88, -89 ADDED	10-13-48	R.M.
BB	3/4 WAS 1/4, 1 WAS 3/4 FOR-81; 1 1/2 WAS 1 1/4, 1 1/4 WAS 1 FOR-82; 1 1/4 WAS 1 1/2 FOR-83; 1 WAS 1 1/4 FOR-84; 1 1/4 WAS 1 FOR-85; 1 1/2 WAS 1 1/4 FOR-86; 1 1/4 WAS 1 1/2 FOR-87; 1 1/2 WAS 1 1/4 FOR-88; 1 1/4 WAS 1 1/2 FOR-89; 1 1/2 WAS 1 1/4 FOR-90; 1 1/4 WAS 1 1/2

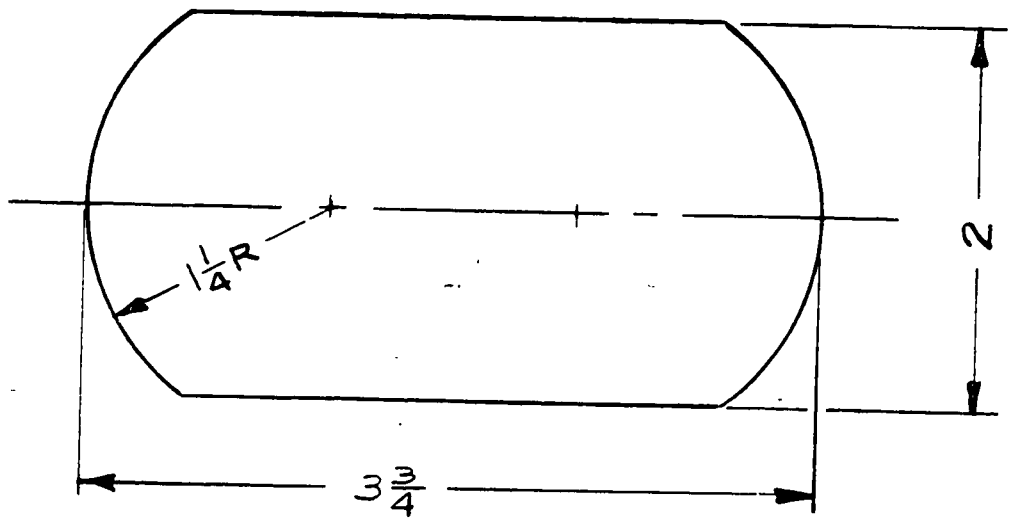

NOTE:

EDGES OF REINFORCEMENT MAY BE PINKED.

(F) (A) (C) (D) (B) (H)

LET	REVISION	DATE	BY
J	REDRAWN WITHOUT CHANGE	6-20-51	C.B.
H	ALTERNATE FABRIC SPEC. ADDED	3-3-50	H.R.K.
G	FABRIC SPEC. ALT. REM.	10-28-46	I.D.B.
F	ADDED PINKING NOTE	9-12-46	J.H.
E	NO. PER SHIP 50 WAS 42	6-21-46	L.R.
D	ALTERNATE SPEC. ADDED	3-25-46	L.R.
C	L-4A NEXT ASSY. 24235 WAS 23865	6-24-44	J.B.M.
B	FABRIC SPEC. REVISED	12-7-43	L.R.
A	J3 MODEL REF. ADDED	11-15-43	J.E.C.

MODEL	PER PLANE	NEXT ASSEMBLY	SUPERSEDES	SUP. BY
J3	50	24665		
L-4A	50	24235		

THIS DRAWING IS THE PROPERTY OF THE PIPER AIRCRAFT CORP. AND ITS POSSESSION BY UNAUTHORIZED PERSONS SHALL NOT BE CONSTRUED AS PERMISSION TO REPRODUCE FOR SALE IN WHOLE OR IN PART ANY DEVICES SHOWN THEREON.

PIPER AIRCRAFT CORP.
LOCK HAVEN, PENNA.

PART NO.	NO. REQ.	SIZE	DESCRIPTION / MATERIAL
		2 X 3 3/4	FABRIC-SAE SPEC. *AMS3804 OR AMS3806 G

SCALE FULL SIZE — TOTAL WT.—LBS.

FINISH—PIPER SPECIFICATION # 10

MANUFACTURING PRACTICES—PIPER SPECIFICATION # 9

REINFORCEMENT- FABRIC

DRAFTSMAN	CHECKER	STANDARDS
R. FRANK 4-1-43	L.E.K. 4-5-43	

23901

G

257

A257

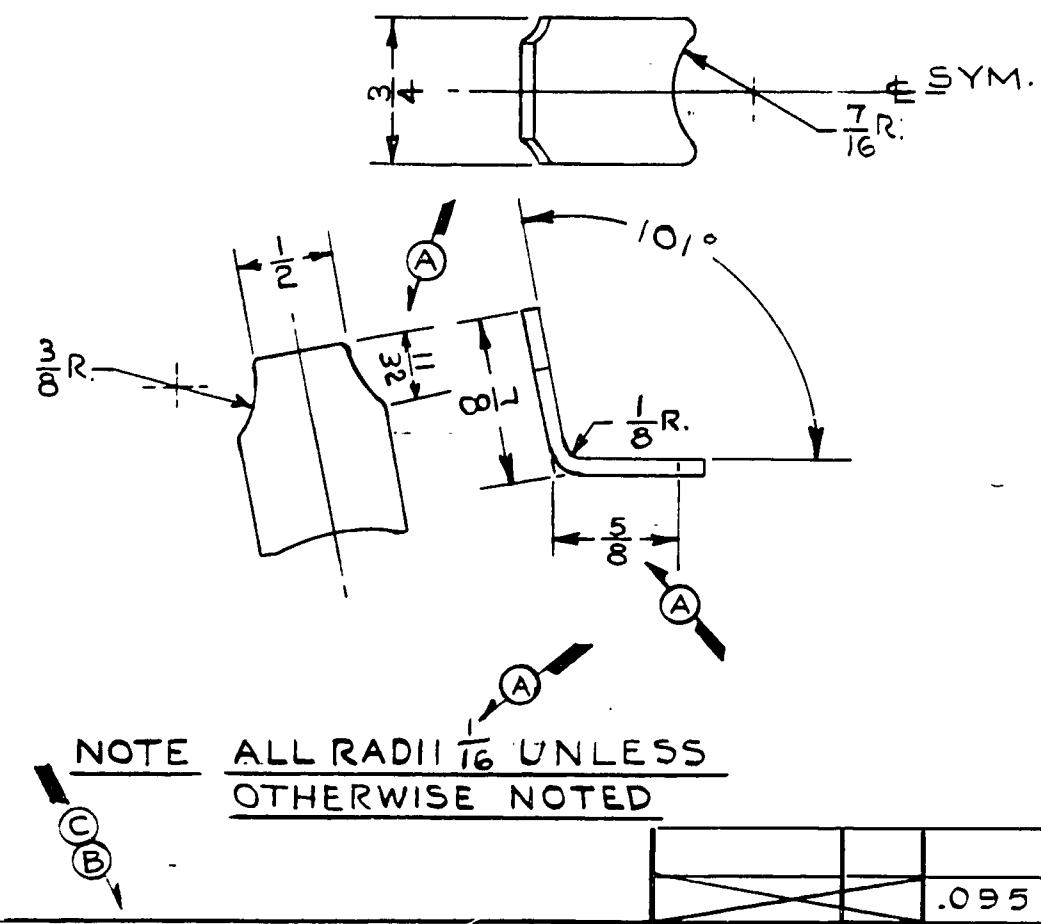

PART NO.	NO. REQ.	SIZE	DESCRIPTION
		.095 x 3/4 x 1 5/8	#1025 STEEL

MATERIAL

SCALE FULL SIZE | TOTAL WT.—LBS.

FINISH—PIPER SPECIFICATION # 10

MANUFACTURING PRACTICES—PIPER SPECIFICATION # 9

MODEL	PER PLANE	NEXT ASSEMBLY	SUPERSEDES	SUP. BY
J3	1	23932	21291	
L-4A	1	23932	21291	

LET	REVISION	DATE	BY
J	REDRAWN WITHOUT CHANGE	6-20-51	I.M.M.
C	J3 MODEL REF. ADDED	9-15-43	M.G.S.
B	1 PER SHIP WAS 2.	8-3-43	R.E.T.
A	DIMENSIONS REVISED	5-31-43	C.E.K.

THIS DRAWING IS THE PROPERTY OF THE PIPER AIRCRAFT CORP. AND ITS POSSESSION BY UNAUTHORIZED PERSONS SHALL NOT BE CONSTRUED AS PERMISSION TO REPRODUCE FOR SALE IN WHOLE OR IN PART ANY DEVICES SHOWN THEREON.

PIPER AIRCRAFT CORP.
LOCK HAVEN, PENNA.

STOP — ELEVATOR REAR

DRAFTSMAN	CHECKER	STANDARDS
McRAE 4-5-43	L.E.K. 4-6-43	

23921

A A

258

A 258

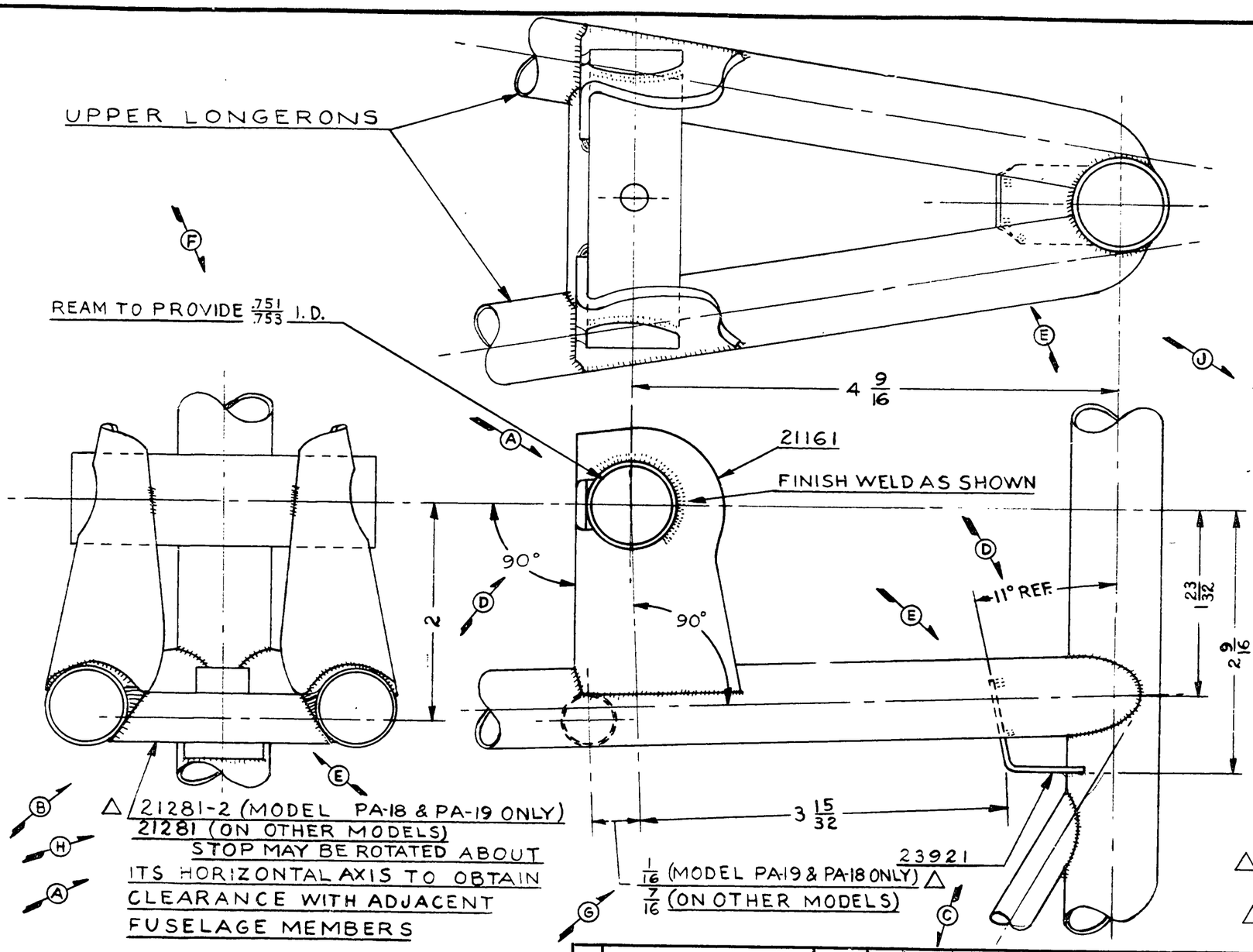

NOTE

△ 1. STOP LOCATION SHOULD PROVIDE 25°±2° UP TRAVEL AND 15°±2° DOWN TRAVEL ON ELEVATOR (MODEL PA-19 & PA-18 ONLY) STOP LOCATION SHOULD PROVIDE 34°±2° UP TRAVEL AND 29°±2° DOWN TRAVEL ON ELEVATOR (ON OTHER MODELS)

△ 2. WHERE MODEL PA-18 IS NOTED, THE MODEL PA-18 SPECIAL (COMPLETE AIRPLANE 12966) & PA-18 (COMPLETE AIRPLANE 13253) ALSO APPLIES.

△	21281-2	1	STOP (ON MODEL PA-18 & PA-19 ONLY)
	21161	1	SUPPORT ASSY.
△	21281	1	STOP ON ALL MODELS EXCEPT PA-18 & PA-19
	23921	1	REAR STOP
	PART NO.	NO. REQ.	NAME / MATERIAL

SCALE FULL SIZE — TOTAL WT.—LBS.

FINISH—PIPER SPECIFICATION # 10

MANUFACTURING PRACTICES—PIPER SPECIFICATION # 9

LET	REVISION	DATE	BY
L	REDRAWN WITHOUT CHANGE	6-21-51	C.K.
K	PA-18 (COMPLETE AIRPLANE 13253) ADDED	3-15-51	M.G.
J	NOTE 2 ADDED	9-12-50	F.C.S.
H	21281-2 WAS 21281 FOR PA-18 & -19	1-10-50	M.G.
G	PA-19 STOP LOCATION ADDED	3-21-49	R.M.
F	NOTE ADDED	12-28-44	J.M.M.
E	TACK WELDS REVISED	12-1-43	I.D.B.
D	90° & 11° REF. ADDED	9-30-43	W.G.T.
C	J3 MODEL REF. ADDED	9-15-43	M.G.S.
B	21281 VIEW REVISED	8-11-43	L.R.
A	NOTE ADDED; WELD REVISED	8-11-43	L.R.

MODEL	PER PLANE	NEXT ASSEMBLY	SUPERSEDES	SUP. BY
J3	1	24006	21302	
L-4A	1	21346	21302	

THIS DRAWING IS THE PROPERTY OF THE PIPER AIRCRAFT CORP. AND ITS POSSESSION BY UNAUTHORIZED PERSONS SHALL NOT BE CONSTRUED AS PERMISSION TO REPRODUCE FOR SALE IN WHOLE OR IN PART ANY DEVICES SHOWN THEREON.

PIPER AIRCRAFT CORP.
LOCK HAVEN, PENNA.

STOPS INSTALLATION — STAB. SUPPORT & ELEVATOR

DRAFTSMAN	CHECKER	STANDARDS
McRAE 4-6-43	L. E. K. 4-6-43	

23932

625

A625

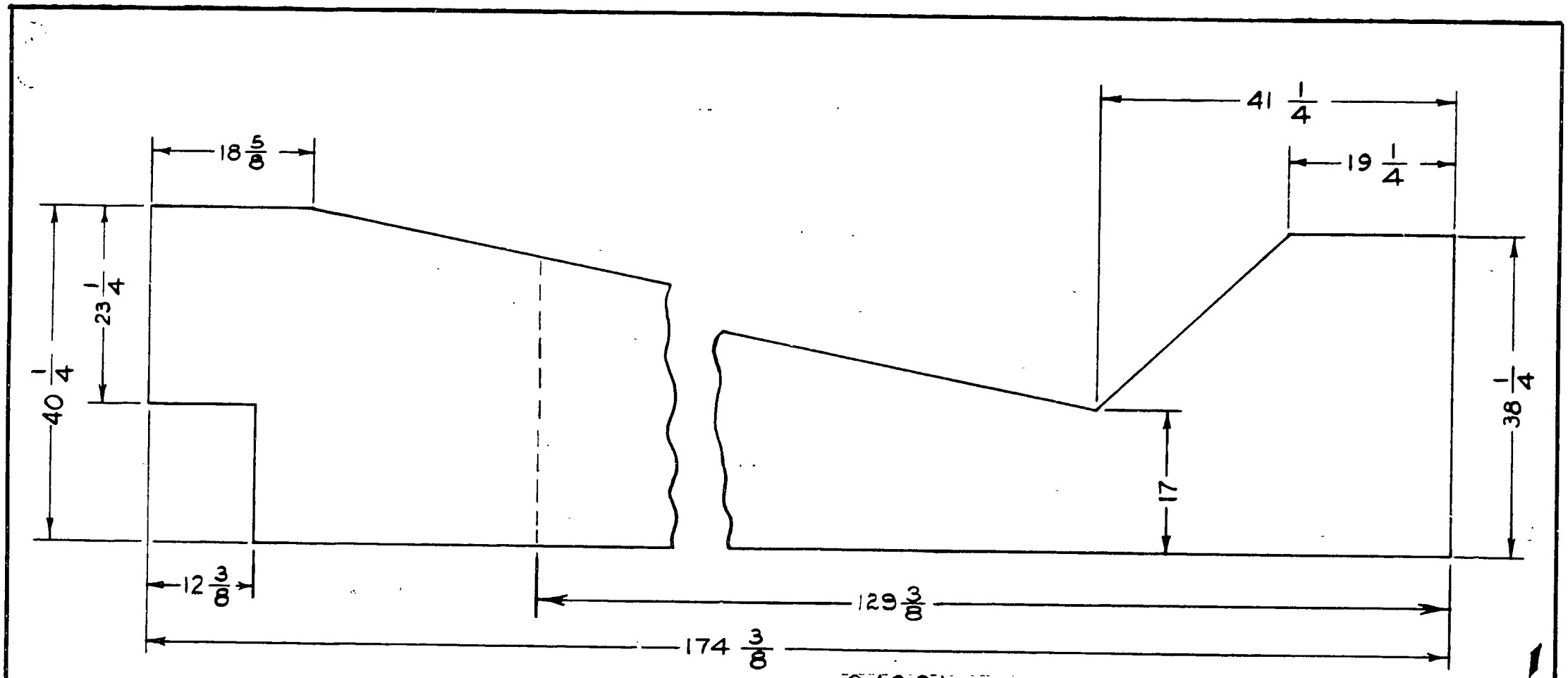

NOTE:

WARP OF COVERING FABRIC SHALL PARALLEL DRAG FORCE.

24021 SHOWN

© 24021-2 CUT OFF AS SHOWN DOTTED

(D)

(A) LIMITS, SHOP PRACTICES AND FINISH. UNLESS OTHERWISE NOTED, TO BE IN ACCORDANCE WITH PIPER SPECIFICATIONS #9 AND #10.

LET	REVISION	DATE	BY
D	ALTERNATE FABRIC SPEC. ADDED	3-6-50	H.R.K.
C	-2 ADDED	3-16-48	R.M.
B	FABRIC SPEC. ALT. REM.	10-24-46	L.D.B.
A	ALTERNATE SPEC. ADDED	3-22-46	L.P.

MODEL	PER SHIP	NEXT ASSEMBLY	SUPERSEDES	SUP. BY
J3	2	24165	23591	

PIPER AIRCRAFT CORP.
LOCK HAVEN, PENNA.

PART No.	No. REQ.	SIZE	DESCRIPTION / MATERIAL
		40 1/4 x 174 3/8	FABRIC - SAE SPEC. AMS 3804 OR AMS 3806

B

SCALE 3/4 IN. = 1 FT. | TOTAL WT. - LBS.

FINISH

FABRIC - FUSELAGE TOP

DRAWN	CHECKED	APPROVED
CROWLEY 11-10-43	C.K. 12-2-43	

24021 B 259

A259

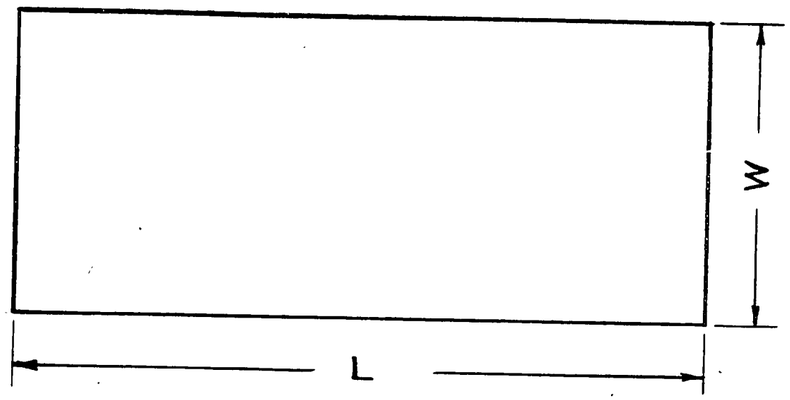

PART NO.	L	W	MATERIAL	MODEL	PER SHIP	NEXT ASSEMBLY	REMARKS
24032-2	19	12½	FABRIC-SAE SPEC. *AMS 3804	J3	2	24165	
24032-3	32½	9¾		J3	2	24166	
24032-4	30	15		J3	1	24165	SUP. 22521
24032-5	40	30		J3	1	24165	SUP. 22521
24032-6	26	24		J3	2	24165	
24032-7	25	24	FABRIC-SAE SPEC. *AMS 3804	J5C	1	24185	
24032-8	52	8½		J6C	1	24195	
24032-9	24	23	ARTIFICIAL LEATHER, TOLEX #24590. BLACK. GRAIN 231, FINISH TF/B.				
24032-10	10	45	FABRIC-SAE SPEC. *AMS 3804				
24032-11	34	16	3370 D-TG-119-12T-54" ANTIQUE TAN NAUGAHYDE				
24032-12	66	34	FABRIC-S.A.E SPEC. *AMS 3806				
24032-13	76½	34	FABRIC-S.A.E. SPEC. *AMS 3806				
24032-14	34	16	3370D-SPL-30M NAUGAHYDE				
24032-15	26	17	FABRIC-S.A.E. SPEC. *AMS 3804				
24032-16	28½	29½	OR *AMS 3806				

LET.	REVISION	DATE	BY
P	-15 & -16 ADDED	2-23-51	L.E.M.
O	-14 ADDED	10-20-50	K.D.
N	MAT'L. SPEC. REV. FOR -11	4-24-50	C.K.
M	-13 ADDED	12-28-49	K.D.
L	-12 ADDED	6-30-49	C.K.
K	-11 ADDED	4-7-49	RC
J	-10 ADDED	9-30-47	H.K.
H	-9 ADDED	3-11-47	C.E.K
G	ALTERNATE FABRIC SPEC. REM.	10-28-46	L.D.B
F	-8 ADDED	3-27-46	L.R.
E	ALTERNATE SPEC. ADDED	3-25-46	L.R.
D	-7 ADDED	1-29-46	HMZ
C	9¾ WAS 9¼ FOR "W" FOR -3	1-14-46	L.R.
B	-6 ADDED	9-27-45	LDB
A	18X12½ WAS 18X11½ FOR -2	9-27-45	HMZ

LIMITS, SHOP PRACTICES AND FINISH. UNLESS OTHERWISE NOTED, TO BE IN ACCORDANCE WITH PIPER SPECIFICATIONS #9 AND #10.

MODEL	PER SHIP	NEXT ASSEMBLY	SUPERSEDES	SUP. BY
NOTED	NOTED	NOTED	NOTED	

PIPER AIRCRAFT CORP.
LOCK HAVEN, PENNA.

PART No.	NO. REQ.	SIZE	DESCRIPTION
NOTED	X	NOTED	NOTED
		MATERIAL	
SCALE		TOTAL WT.-LBS.	
FINISH			

FABRIC - RECTANGULAR

DRAWN	CHECKED	APPROVED	
Keller	C.K.		24032
12-8-43	12-9-43		

A626

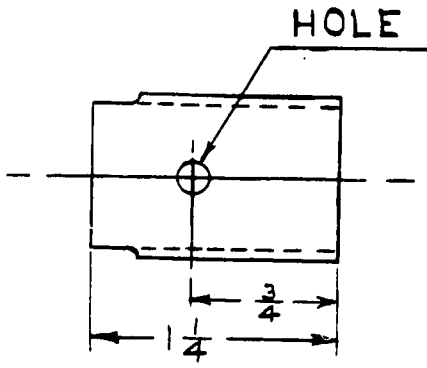

PART NO.	MODEL	"A"	REQ'D PER SHIP	NEXT ASSY.	SUPERSEDES
24101	J3, L-4A	17/32	2	21483	81172-28
24101-2	J5C	15/32	2	20823	81172-3

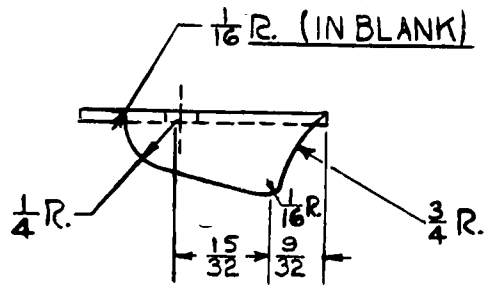

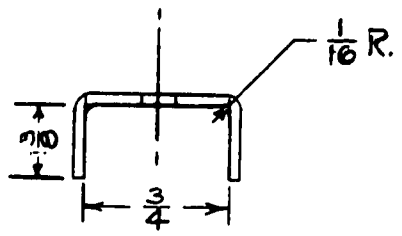

PART NO.	HOLE
24101	.191
24101-3	.281

NOTE: BLANK OF THIS PART MAY BE MADE FROM BLANK OF PARTS SHOWN ON 24121

(E)

LIMITS, SHOP PRACTICES AND FINISH. UNLESS OTHERWISE NOTED, TO BE IN ACCORDANCE WITH PIPER SPECIFICATIONS #9 AND #10.

LET.	REVISION	DATE	BY
F	-3 ADDED	7-14-48	HRK
E	L-14 MODEL REF. ADDED	6-13-45	J.B.M.
D	REDRAWN & REVISED	12-30-43	R.D.R.

MODEL	PER SHIP	NEXT ASSEMBLY	SUPERSEDES	SUP. BY
L-14	14	91010		
J5C	2	20823	81172-3	
L4A	4	21483	81172-28	
J3	4	21483	81172-28	

PIPER AIRCRAFT CORP.
LOCK HAVEN, PENNA.

PART No.	No. REQ.	SIZE	MATERIAL
		.045×1 1/4×1 17/32	*1025 STEEL

SCALE: FULL SIZE | TOTAL WT.-LBS.

FINISH

FITTING— FLOORBOARD ATTACHMENT

DRAWN	CHECKED	APPROVED
R.D.R. 12-30-43	M.G.S. 12-30-43	

24101

260

A260

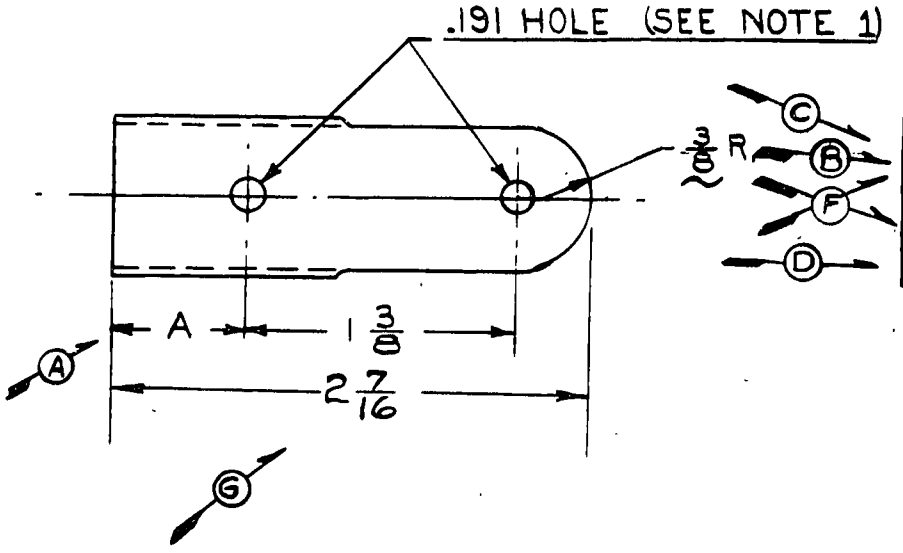

PART NO	A	MODEL	PER SHIP	NEXT ASSY	SUPERSEDES
24121-2	23/32	J3L-4A	4	21483	20791
		J5C	4	20823	
24121-3	19/32	J3L-4A	4	21483	24131
24121-4	17/32	J5C	4	20823	20791

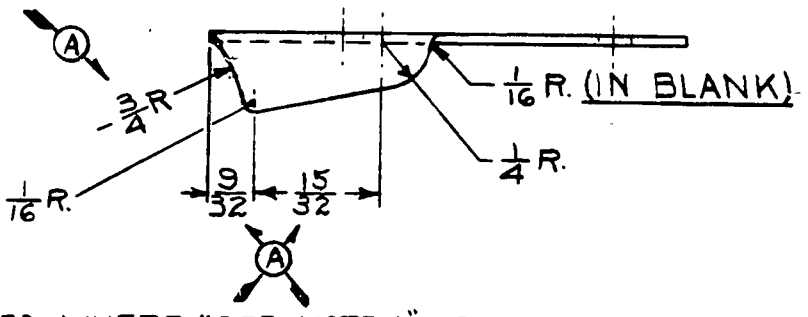

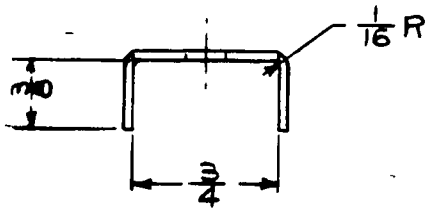

NOTE

1. HOLES WHERE "SEE NOTE 1" IS INDICATED SHALL COINCIDE WITH RELATED HOLES IN 80222-3 ON RUDDER PEDAL INST.

LIMITS, SHOP PRACTICES AND FINISH. UNLESS OTHERWISE NOTED, TO BE IN ACCORDANCE WITH PIPER SPECIFICATIONS #9 AND #10.

LET	REVISION	DATE	BY
G	2 7/16 DIM. ADDED	1-6-44	R.D.R.
F	A DIM FOR -2 WAS 25/32 -3 WAS 3/4	12-18-43	I.M.M.
E	2 7/16 DIM. REMOVED	12-18-43	I.M.M.
D	-4 ADDED	11-3-43	J.C.
C	MODEL J5C ADDED TO -2	11-3-43	J.C.
B	-2 & -3 WAS 24121	10-28-43	M.G.S.
A	DIM. & TITLE REVISED	10-28-43	M.G.S.

MODEL	PER SHIP	NEXT ASSEMBLY	SUPERSEDES	SUP. BY
NOTED	NOTED	NOTED	NOTED	

PIPER AIRCRAFT CORP.
LOCK HAVEN, PENNA.

PART No.	No. REQ.	SIZE	DESCRIPTION
		.045 x 1 17/32 x 2 7/16	*1025 STEEL
		MATERIAL	

SCALE FULL SIZE | TOTAL WT. - LBS.
FINISH

FITTING - RUDDER PEDAL ATTACHMENT

DRAWN	CHECKED	APPROVED
M.G.S. 9-22-43	C.K. 9-25-43	

24121

261

A 261

WAS J2-312
D399-A

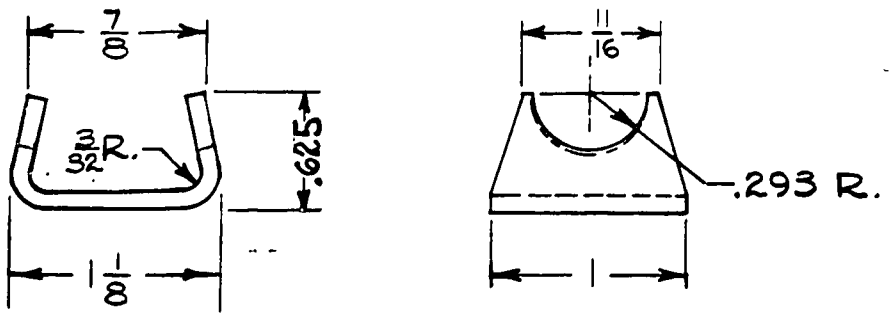

LIMITS, SHOP PRACTICES AND FINISH. UNLESS OTHERWISE NOTED, TO BE IN ACCORDANCE WITH PIPER SPECIFICATIONS #9 AND #10.

PART No.	No. REQ.	SIZE	MATERIAL
		.095×1×2 1/16	#1025 STEEL

SCALE FULL SIZE — TOTAL WT. - LBS.

FINISH

BRACKET—LANDING GEAR VEE "U"

MODEL	PER SHIP	NEXT ASSEMBLY	SUPERSEDES	SUP. BY
L-4A	4	30361		
J5C	4	30361		
J3	4	30361		

LET.	REVISION	DATE	BY
C	REDRAWN & REVISED	11-26-43	R.F.

PIPER AIRCRAFT CORP.
LOCK HAVEN, PENNA.

DRAWN	CHECKED	APPROVED
R. FRANK 11-26-43	M. G. S. 11-30-43	

30351

262

A 262

WAS J2-A36
D399-A

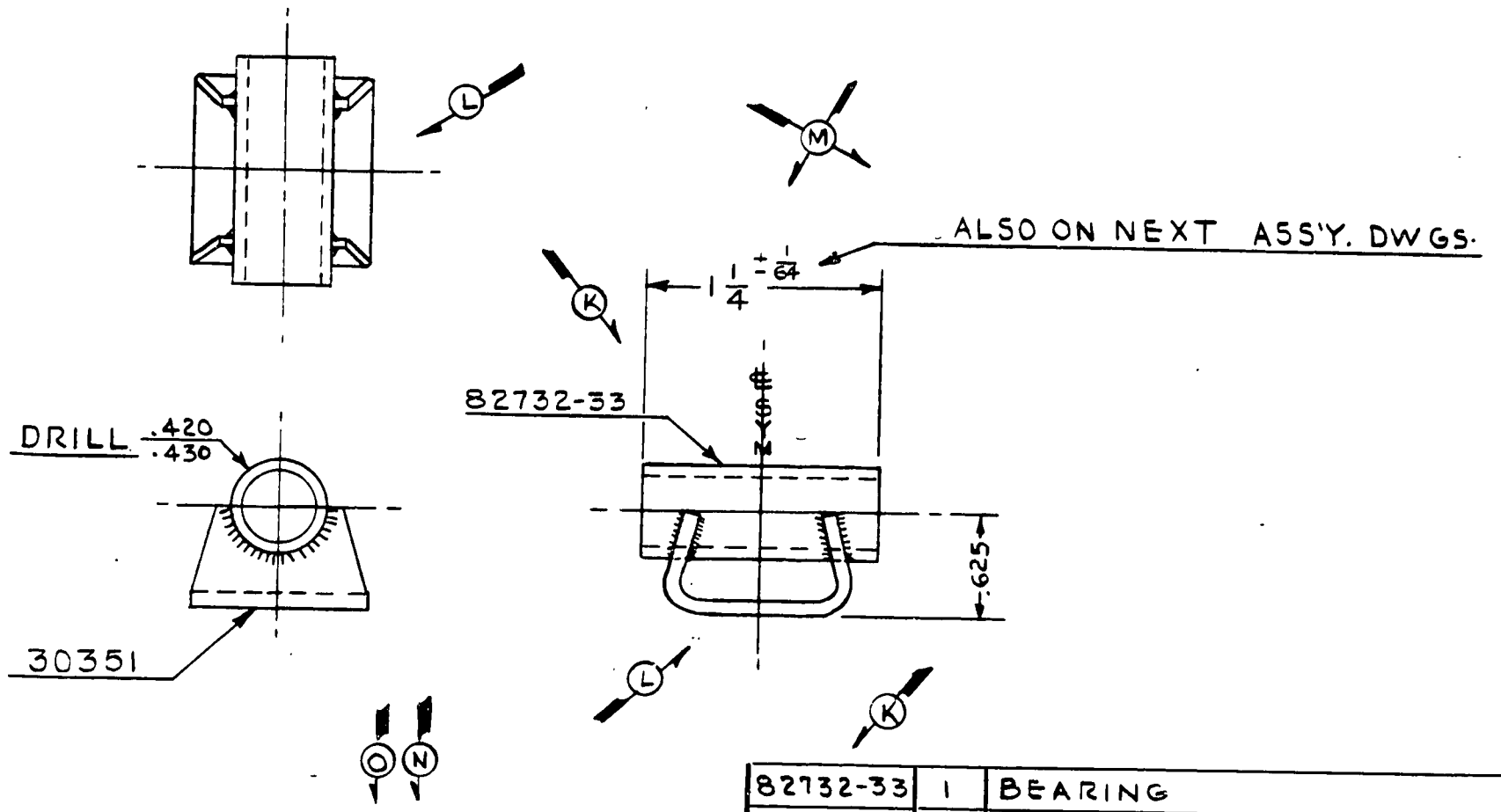

LET	REVISION	DATE	BY
P	REDRAWN WITHOUT CHANGE	6-22-51	I.M.M.
O	J3 N.A.-10033 WAS 31483	8-27-46	C.E.K
N	N.ASSY. 10028 WAS 30823	8-24-45	L.R.
M	1 1/4 ± 1/64 DIM. & NOTE ADDED	6-4-45	H.M.Z
L	30351 VIEW REVISED	11-26-43	R.R.F.
K	82732-33 WAS 82732-7	11-4-43	L.R.
J	REDRAWN & REVISED	9-16-43	A.H.

MODEL	PER PLANE	NEXT ASSEMBLY	SUPERSEDES	SUP. BY
L-4A	4	31483		
J3	4	10033; 80284		
J5C	4	10028	30231	

THIS DRAWING IS THE PROPERTY OF THE PIPER AIRCRAFT CORP. AND ITS POSSESSION BY UNAUTHORIZED PERSONS SHALL NOT BE CONSTRUED AS PERMISSION TO REPRODUCE FOR SALE IN WHOLE OR IN PART ANY DEVICES SHOWN THEREON.

PIPER AIRCRAFT CORP.
LOCK HAVEN, PENNA.

PART NO.	NO. REQ.	NAME / MATERIAL
82732-33	1	BEARING
30351	1	"U" BRACKET

SCALE FULL SIZE | TOTAL WT.—LBS.
FINISH—PIPER SPECIFICATION # 10
MANUFACTURING PRACTICES—PIPER SPECIFICATION # 9

BEARING ASSEMBLY— LANDING GEAR VEE

DRAFTSMAN	CHECKER	STANDARDS
A.H. 9-16-43	C.K. 9-17-43	

30361

263

A263

WAS J3-316
J3-316

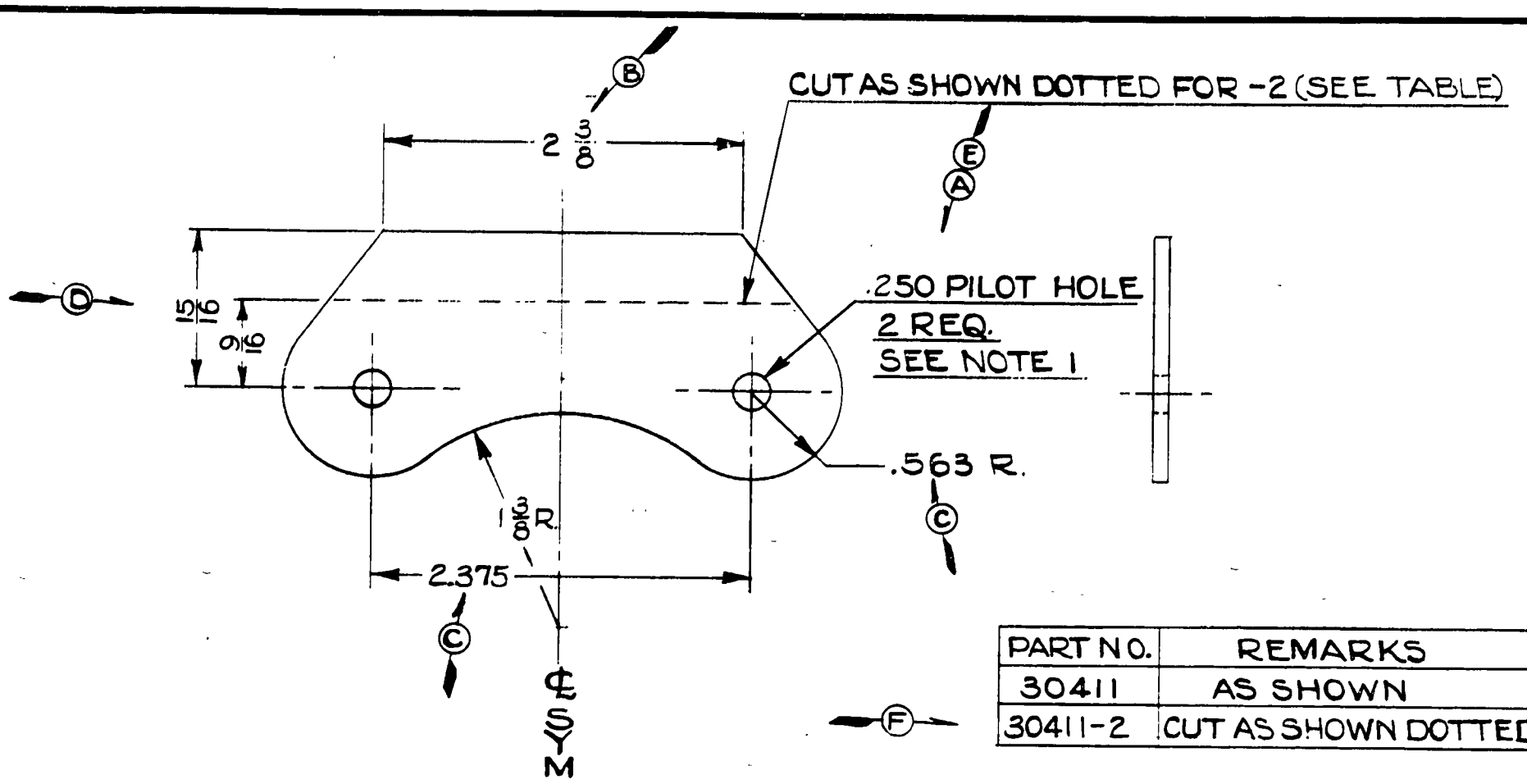

PART NO.	REMARKS
30411	AS SHOWN
30411-2	CUT AS SHOWN DOTTED

NOTE 1. HOLES SHALL COINCIDE WITH RELATED HOLES ON 30421.

LET	REVISION	DATE	BY
G	REDRAWN WITHOUT CHANGE	6-19-51	I.E.M.
F	-2 ADDED	11-14-47	R.C.
E	.250 WAS 1/4; NOTE ADDED	5-11-43	C.K.
D	1 3/32 REMOVED, 15/16 ADDED	3-10-43	R.T.M.
C	.563 R. WAS 9/16 R. 2.375 WAS 2 3/8	3-10-43	R.T.M.
B	2 3/8" WAS 2 1/4"	1-13-42	H.R.R.
A	1/4" HOLE WAS 5/16"	10-31-41	C.L.W.

MODEL	PER PLANE	NEXT ASSEMBLY	SUPERSEDES	SUP. BY
L-4B	2	30602		
L-4A	2	30602		
J3	2	30602		
J5	2	30473		

THIS DRAWING IS THE PROPERTY OF THE PIPER AIRCRAFT CORP. AND ITS POSSESSION BY UNAUTHORIZED PERSONS SHALL NOT BE CONSTRUED AS PERMISSION TO REPRODUCE FOR SALE IN WHOLE OR IN PART ANY DEVICES SHOWN THEREON.

PIPER AIRCRAFT CORP.
LOCK HAVEN, PENNA.

PART NO.	NO. REQ.	SIZE	MATERIAL
		.095 x 1 1/2 x 3 1/2	C1025 STEEL

SCALE FULL SIZE | TOTAL WT.—LBS.

FINISH—PIPER SPECIFICATION # 10

MANUFACTURING PRACTICES—PIPER SPECIFICATION # 9

REINFORCEMENT-LANDING GEAR CABANE VEE

DRAFTSMAN	CHECKER	STANDARDS
R.C.M. 8-14-41	R.R.B. 8-18-41	

30411

264

A264

WAS J3-35 / J3-35

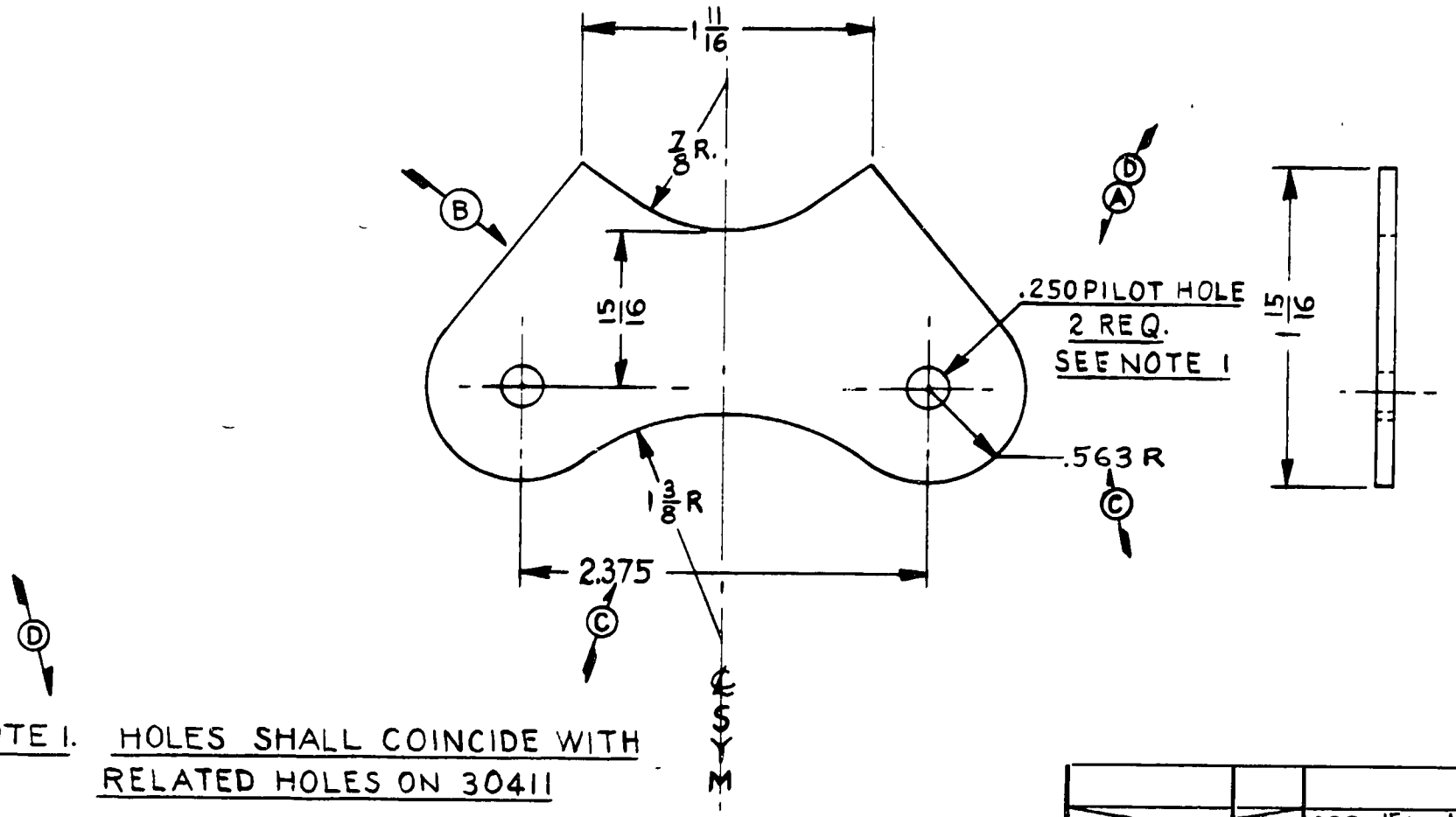

NOTE 1. HOLES SHALL COINCIDE WITH RELATED HOLES ON 30411

MODEL	PER PLANE	NEXT ASSEMBLY	SUPERSEDES	SUP. BY
L-4B	2	30602		
L-4A	2	30602		
J3	2	30602		
J5	2	30478		

LET	REVISION	DATE	BY
E	REDRAWN WITHOUT CHANGE	6-19-51	C.K.
D	.250 WAS 1/4; NOTE ADDED	5-11-43	C.K.
C	2.375 WAS 2 3/8, .563R WAS 9/16	3-10-43	R.T.M.
B	1 3/32 REMOVED; 15/16 ADDED	3-10-43	R.T.M.
A	1/4 HOLE WAS 5/16 DRILL	10-31-41	C.L.W.

THIS DRAWING IS THE PROPERTY OF THE PIPER AIRCRAFT CORP. AND ITS POSSESSION BY UNAUTHORIZED PERSONS SHALL NOT BE CONSTRUED AS PERMISSION TO REPRODUCE FOR SALE IN WHOLE OR IN PART ANY DEVICES SHOWN THEREON.

PIPER AIRCRAFT CORP.
LOCK HAVEN, PENNA.

PART NO.	NO. REQ.	SIZE	MATERIAL
		.095 x 1 15/16 x 3 1/2	#1025 STEEL

SCALE FULL SIZE | TOTAL WT.—Lbs.

FINISH—PIPER SPECIFICATION # 10

MANUFACTURING PRACTICES—PIPER SPECIFICATION # 9

FITTING-LANDING GEAR CABANE VEE

DRAFTSMAN	CHECKER	STANDARDS
R. C. M. 8-14-41	R. R. B. 8-18-41	

30421

265

A 265

WAS J2-816
D3020A

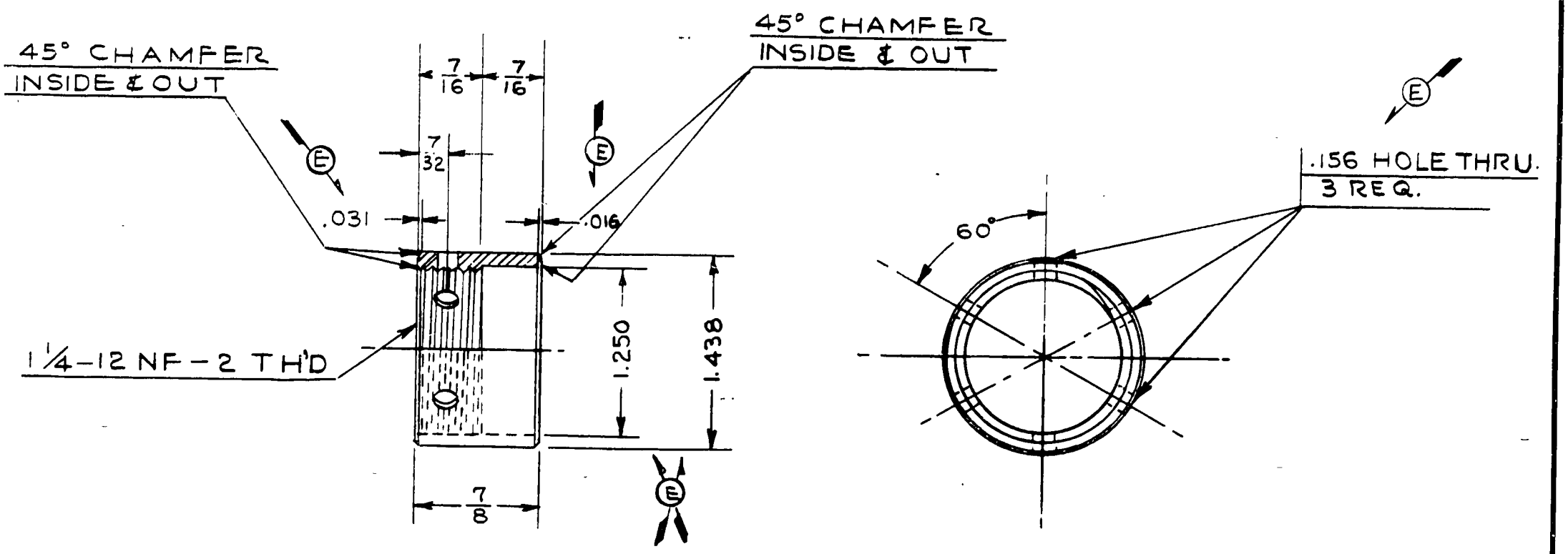

FINISH — PARKERIZED

				L-4A	2	31493		
				TG-8	2	31493		
				L-4B	2	31113		
				J5C NEXT J5C	8	30855 10025		
J	REDRAWN WITHOUT CHANGE	6-21-51	I.M.M.	J5	2	30482		
H	J5C NEXT ASS'Y 10025 WAS 30855	8-24-45	D.M.B	J4	2	30333		
G	REDRAWN WITHOUT CHANGE	4-10-44	C.H.S	J3	8	31513		
F	J3 NEXT ASS'Y. 31513 WAS 31333 E30612	8-26-43	R.E.T	MODEL	PER PLANE	NEXT ASSEMBLY	SUPERSEDES	SUP. BY
E	DIMENSIONS REVISED	5-12-43	C.E.K					
D	NEXT ASS'Y 31063 (J3, L-4A, L-4B) REV.	4-12-43	R.E.T.					
C	L-4A NEXT ASS'Y 31493 WAS 31113	4-10-43	R.E.T.					
B	NEXT ASS'Y. 31113 WAS 30642	12-2-42	J.C.B.					
A	C.R. STL. WAS STEEL	2-27-42	C.E.V.					
LET	REVISION	DATE	BY					

THIS DRAWING IS THE PROPERTY OF THE PIPER AIRCRAFT CORP. AND ITS POSSESSION BY UNAUTHORIZED PERSONS SHALL NOT BE CONSTRUED AS PERMISSION TO REPRODUCE FOR SALE IN WHOLE OR IN PART ANY DEVICES SHOWN THEREON.

PIPER AIRCRAFT CORP.
LOCK HAVEN, PENNA.

PART NO.	NO. REQ.	NOTED	C.R. STEEL
		SIZE	DESCRIPTION
		MATERIAL	

SCALE FULL SIZE | TOTAL WT.—LBS.

FINISH—PIPER SPECIFICATION # 10

MANUFACTURING PRACTICES—PIPER SPECIFICATION # 9

NUT— AXLE

F.B.	W.E.S.		30491
9-17-41	9-17-41	.	
DRAFTSMAN	CHECKER	STANDARDS	

266

A 266

WAS 3020 / D3012-A

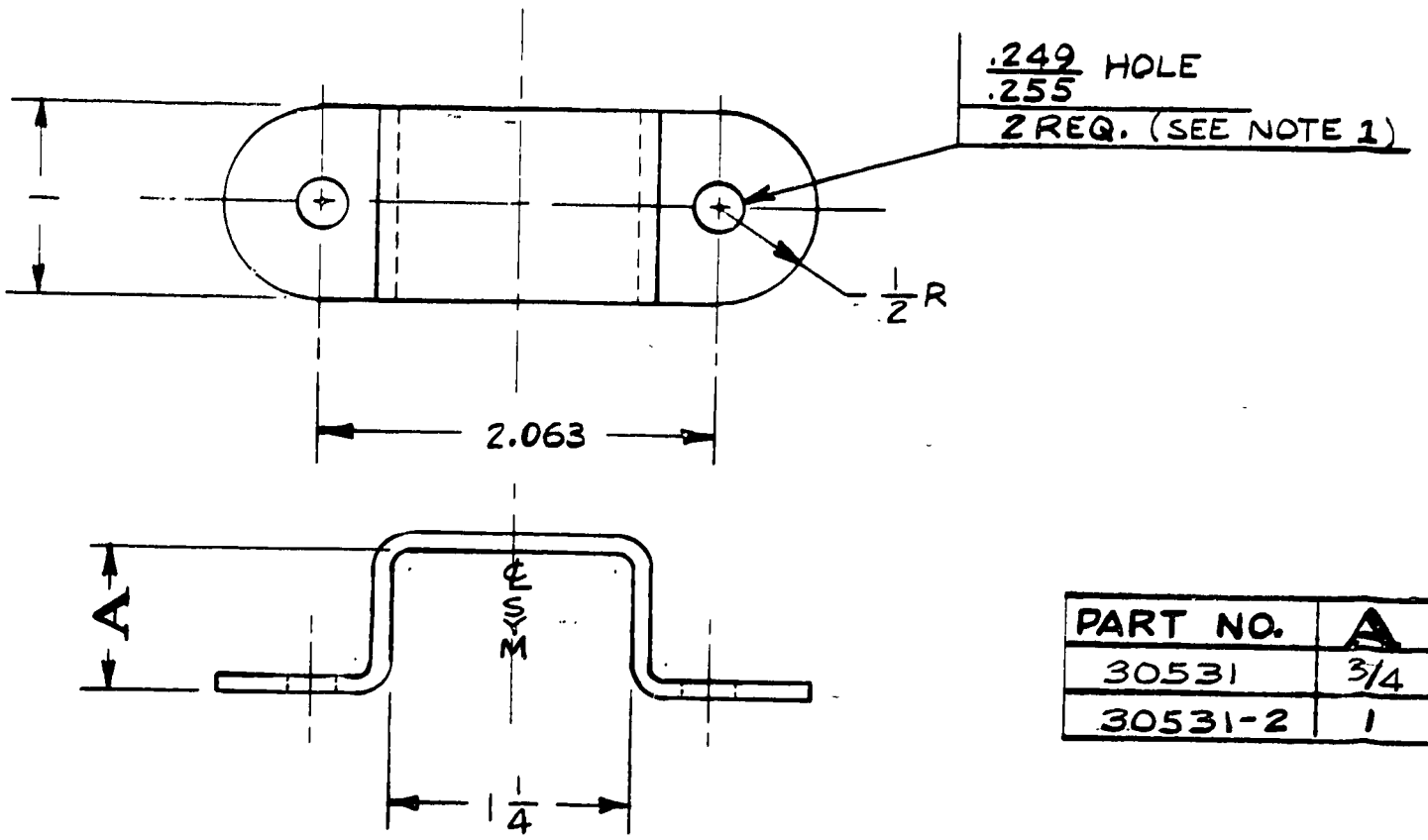

PART NO.	A	MATERIAL
30531	3/4	.095 #1025 ST'L.
30531-2	1	.125 #4130 ST'L.

NOTE 1. HOLES SHALL COINCIDE WITH RELATED HOLES ON 20611.

LET	REVISION	DATE	BY
N	REDRAWN & REVISED	6-19-51	C.B

MODEL | PER PLANE | NEXT ASSEMBLY | SUPERSEDES | SUP. BY

THIS DRAWING IS THE PROPERTY OF THE PIPER AIRCRAFT CORP. AND ITS POSSESSION BY UNAUTHORIZED PERSONS SHALL NOT BE CONSTRUED AS PERMISSION TO REPRODUCE FOR SALE IN WHOLE OR IN PART ANY DEVICES SHOWN THEREON.

PIPER AIRCRAFT CORP.
LOCK HAVEN, PENNA.

PART NO.	NO. REQ.	1 X NOTED	SEE TABLE
		SIZE	DESCRIPTION
		MATERIAL	

SCALE FULL SIZE | TOTAL WT.—LBS.

FINISH—PIPER SPECIFICATION # 10

MANUFACTURING PRACTICES—PIPER SPECIFICATION # 9

CLAMP — TAIL WHEEL SPRING

DRAFTSMAN	CHECKER	STANDARDS
C.E.B. 6-19-51	H.R.K. 6-19-51	

30531

267

A267

WAS J3-A313

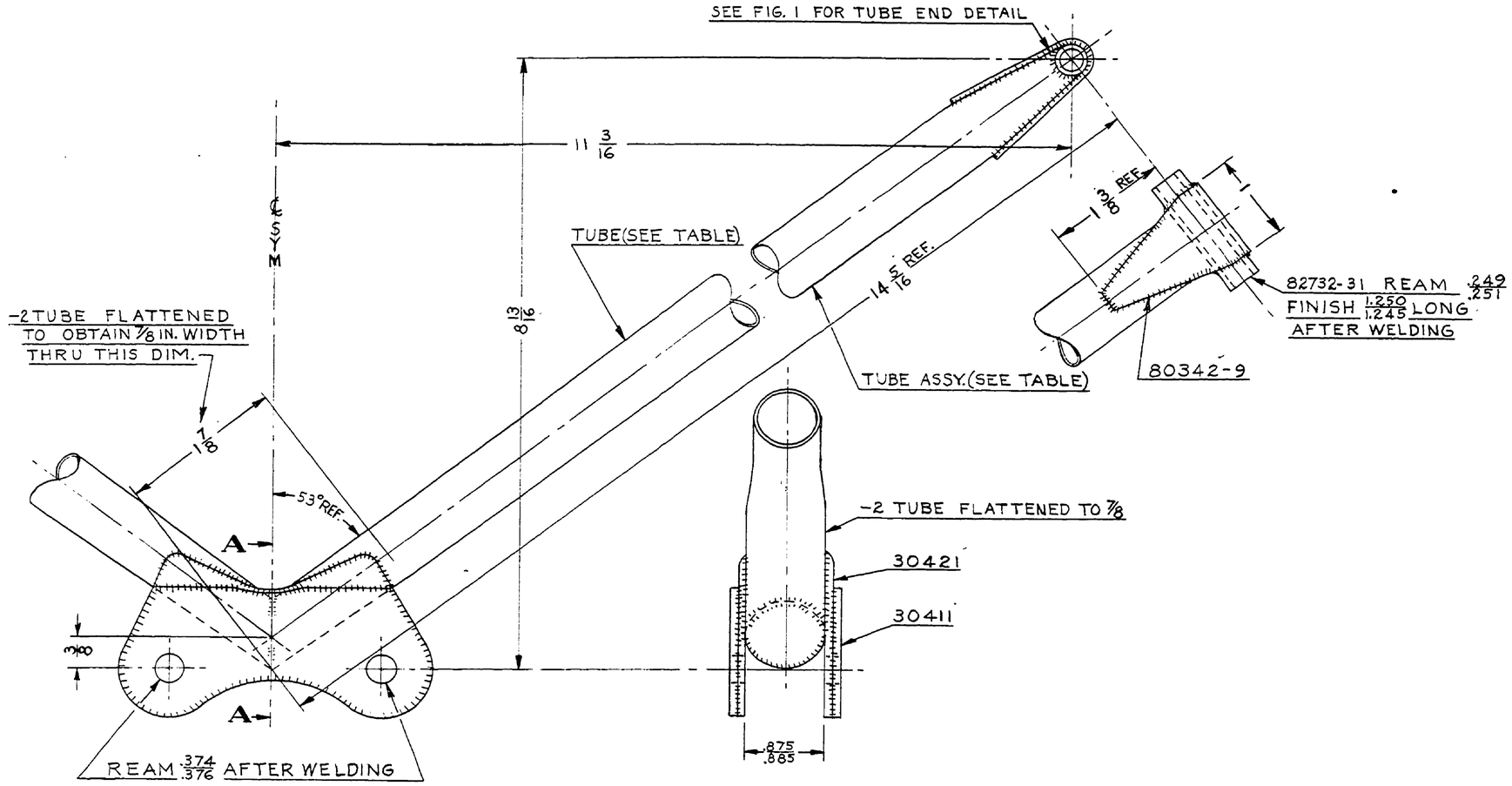

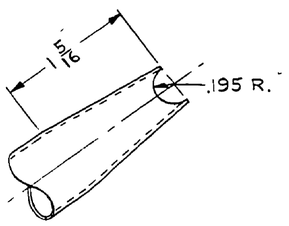

FIG. 1

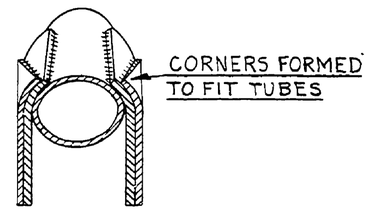

SECTION A-A

ASSY. NO.	TUBE ASSY.NO.	TUBE NO.
30602	30602-3	30602-2
30602-6	30602-5	30602-4

PART NO.	NO. REQ.	SIZE	DESCRIPTION / MATERIAL
82732-31	2		BUSHING
80342-9	2		STRAP
30421	2		FITTING
30411	2		REINFORCEMENT
-5 —OR— -3	2		TUBE ASSY. CONSISTS OF -4, 82732-31 & 80342-9 / TUBE ASSY. CONSISTS OF -2, 82732-31 & 80342-9
-4 —OR— -2	2	7/8 x .035 x 15 / 3/4 x .035 x 15	*4130 STEEL TUBE

SEE TABLE

SCALE FULL SIZE — TOTAL WT.—LBS.

FINISH—PIPER SPECIFICATION #10

MANUFACTURING PRACTICES—PIPER SPECIFICATION #9

THIS DRAWING IS THE PROPERTY OF THE PIPER AIRCRAFT CORP. AND ITS POSSESSION BY UNAUTHORIZED PERSONS SHALL NOT BE CONSTRUED AS PERMISSION TO REPRODUCE FOR SALE, IN WHOLE OR IN PART. ANY DEVICES SHOWN THEREON

LET.	REVISION	DATE	BY
J	REDRAWN & REVISED	6-12-50	C.K.

MODEL | PER PLANE | NEXT ASSEMBLY | SUPERSEDES | SUP. BY

PIPER AIRCRAFT CORP.
LOCK HAVEN, PENNA.

VEE ASSEMBLY—LANDING GEAR CABANE

DRAFTSMAN	CHECKER	STANDARDS
C. E. K. 6-12-50	H. R. K. 6-16-50	

30602

A803

WAS 307/D39-A

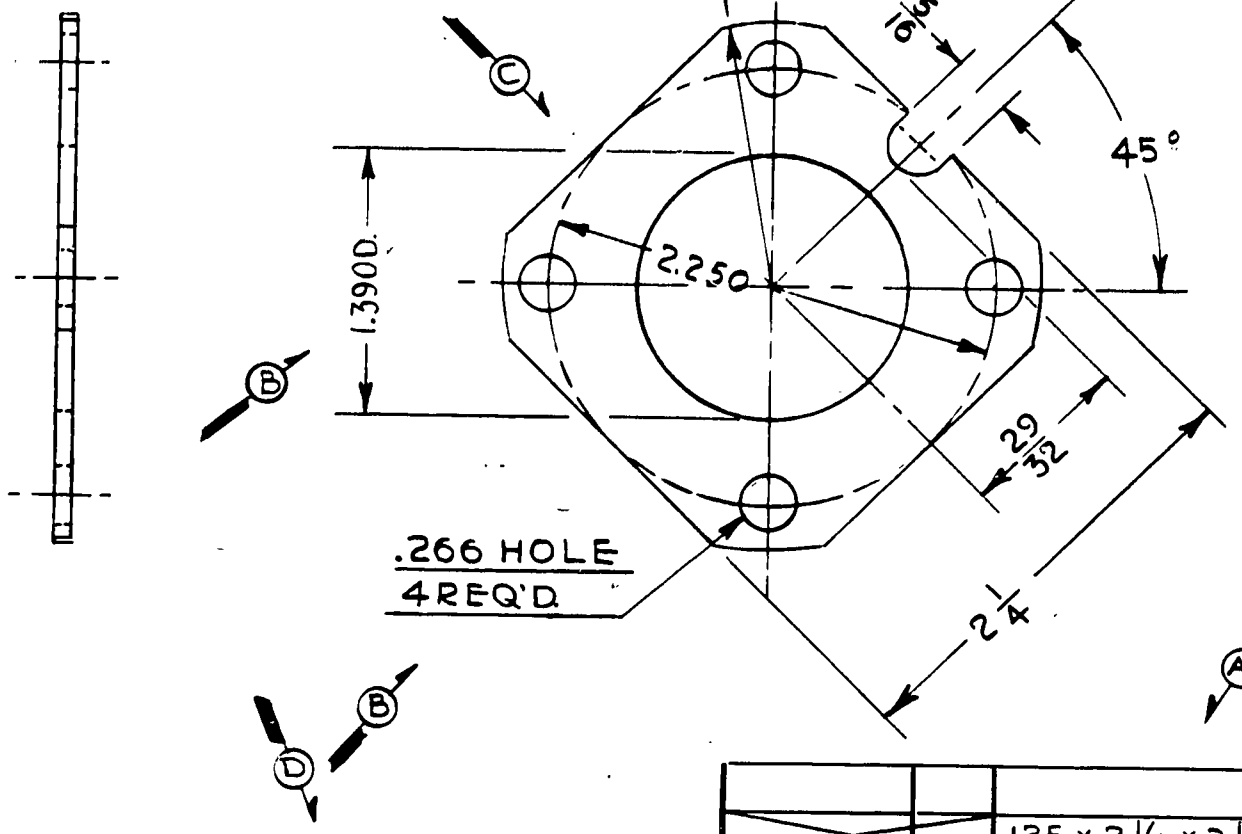

		.125 x 2 1/4 x 2 1/4	#1025 SH. ST'L
PART NO.	NO. REQ.	SIZE	DESCRIPTION
		MATERIAL	

SCALE FULL SIZE | TOTAL WT.—LBS.

FINISH—PIPER SPECIFICATION # 10

MANUFACTURING PRACTICES—PIPER SPECIFICATION # 9

FLANGE — LANDING GEAR AXLE TORQUE

MODEL	PER PLANE	NEXT ASSEMBLY	SUPERSEDES	SUP. BY
J5D	2	30772		
TG-8	2	31152		
NE-1	2	30778		
~~J5C~~	2	10028		

LET	REVISION	DATE	BY
E	REDRAWN WITHOUT CHANGE	6-22-51	I.M.M.
D	J5C N.A. 10028 WAS 30772	9-26-45	H.M.Z.
C	2.250 ADDED	9-28-43	L.R.
B	1.390 WAS 1 3/8; .266 WAS 17/64	9-28-43	L.R.
A	.125 WAS .095	1-29-42	R.R.B

THIS DRAWING IS THE PROPERTY OF THE PIPER AIRCRAFT CORP. AND ITS POSSESSION BY UNAUTHORIZED PERSONS SHALL NOT BE CONSTRUED AS PERMISSION TO REPRODUCE FOR SALE IN WHOLE OR IN PART ANY DEVICES SHOWN THEREON.

PIPER AIRCRAFT CORP.
LOCK HAVEN, PENNA.

DRAFTSMAN	CHECKER	STANDARDS	
R.C. 12-17-41	R.C.M. 1-2-42		**30781**

268

A 268

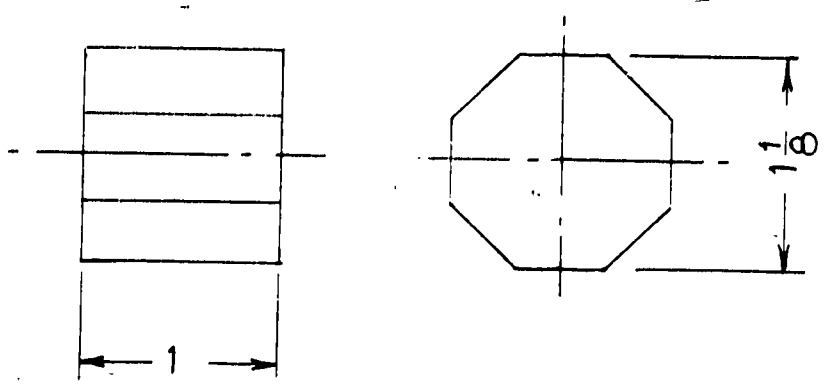

NOTE: DIP IN ZINC CHROMATE PRIMER.

LIMITS. SHOP PRACTICES AND FINISH. UNLESS OTHERWISE NOTED. TO BE IN ACCORDANCE WITH PIPER SPECIFICATIONS #9 AND #10.

LET.	REVISION	DATE	SR.	BY
G	J3 NEXT ASSY 10033 WAS 31483	8-27-43		C.E.K.
F	J3 NEXT ASSY 31483 WAS 30712 & 30622	8-27-43		R.E.T.
E.	REDRAWN & REVISED	5-7-43		C·E·K·

MODEL	PER SHIP	NEXT ASSEMBLY	SUPERSEDES	SUPERSEDED BY
L-4B	2	30712		
L-4A	2	31483		
J5	2	30452		
J3	2	10033		

PIPER AIRCRAFT CORP.
LOCK HAVEN, PENNA.

PART No.	No. REQ.	SIZE	DESCRIPTION / MATERIAL
		$1\frac{1}{8} \times 1\frac{1}{8} \times 1$	WOOD

SCALE : FULL SIZE

PLUG - AXLE

DRAWN	CHECKED	APPROVED
Keller 5-7-43	L.E.K. 5-7-43	

30941

NO. 195-M ALBANENE A. & D. SMITH CO., PGH., PA.

269

A 269

WAS 30452-4 L.H.
30452-5 R.H.

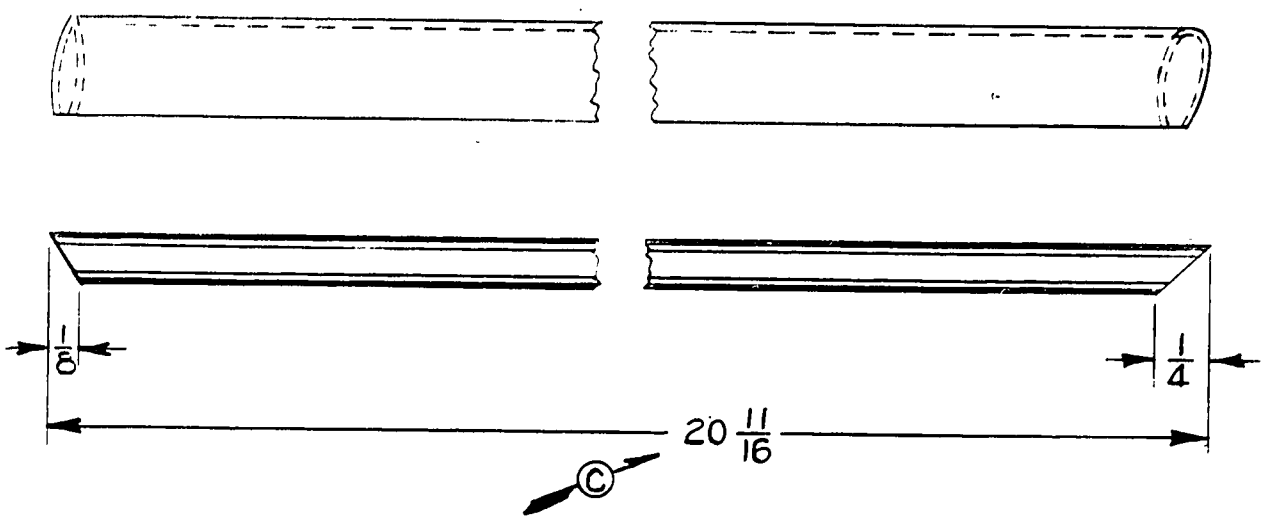

31041 L.H. - SHOWN
31041-1 R.H. - OPPOSITE

E B

F A D

				MODEL	PER PLANE	NEXT ASSEMBLY	SUPERSEDES	SUP. BY
				L-4B	L. 1R	30712		
				L-4A	L. 1R	31483		
				J3	L. 1R	10033		
				J5	L. 1R	30452		
G	REDRAWN WITHOUT CHANGE	6-19-51	I.E.M.					
F	J3 NEXT ASSY. 10033 WAS 31483	8-27-45	C.E.K.					
E	ALTERNATE MAT'L. SPEC. ADDED	1-10-44	J.B.M.					
D	J3 NEXT ASSY. 31483 WAS 30712 & 30622	9-1-43	R.E.T.					
C	20 11/16 WAS 20 3/4	8-18-43	R.E.T.					
B	PIPER SEC. WAS 1710 KAWNEER	5-7-43	C.E.K.					
A	L-4A NEXT ASSY. 31483 WAS 30712	4-7-43	R.E.T.					
LET	REVISION	DATE	BY					

THIS DRAWING IS THE PROPERTY OF THE PIPER AIRCRAFT CORP. AND ITS POSSESSION BY UNAUTHORIZED PERSONS SHALL NOT BE CONSTRUED AS PERMISSION TO REPRODUCE FOR SALE IN WHOLE OR IN PART ANY DEVICES SHOWN THEREON.

PIPER AIRCRAFT CORP.
LOCK HAVEN, PENNA.

85351	DWG. REF. ONLY	CHANNEL SECTION	
84481	DWG. REF. ONLY	CHANNEL SECTION	
		20 11/16 LONG	PIPER SECTION 84481 OR PIPER SECTION 85351
PART NO.	NO. REQ.	SIZE	DESCRIPTION / MATERIAL

SCALE FULL SIZE — TOTAL WT.—LBS.
FINISH—PIPER SPECIFICATION # 10
MANUFACTURING PRACTICES—PIPER SPECIFICATION # 9

CHANNEL-LANDING GEAR

DRAFTSMAN	CHECKER	STANDARDS
H.R.K. 2-25-42	J.S.B 2-27-42	

31041

270



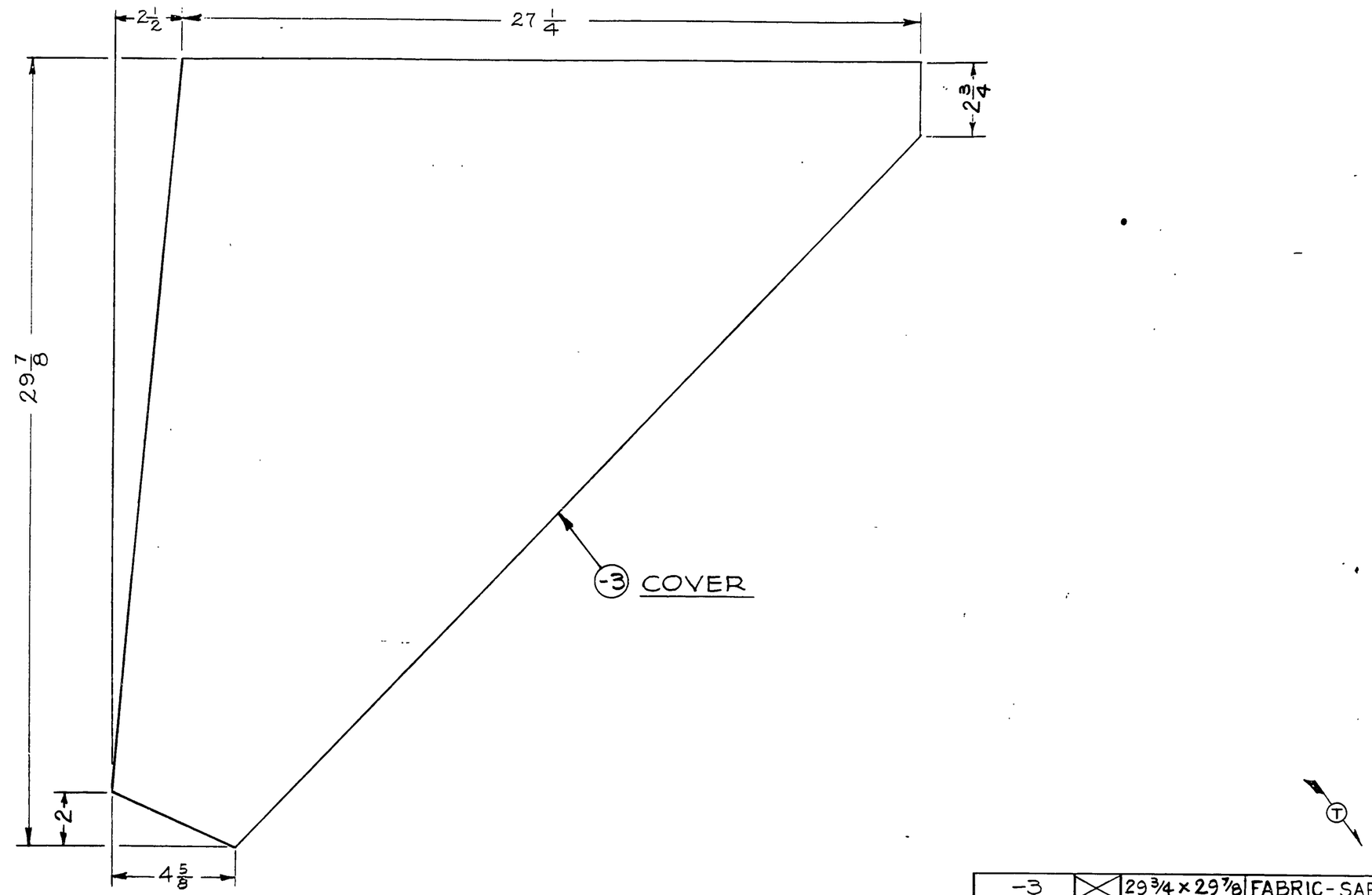

PART No.	No. REQ.	SIZE	DESCRIPTION
-3		29 3/4 x 29 7/8	FABRIC-SAE SPEC.
~~-2~~		~~29 1/2 x 31 1/2~~	#AMS 3804 OR #AMS 3806

MATERIAL

SCALE 3 IN. = 1 FT. TOTAL WT.—LBS.

FINISH—PIPER SPECIFICATION #10

MANUFACTURING PRACTICES—PIPER SPECIFICATION #9

FABRIC - LANDING GEAR VEE

THIS DRAWING IS THE PROPERTY OF THE PIPER AIRCRAFT CORP. AND ITS POSSESSION BY UNAUTHORIZED PERSONS SHALL NOT BE CONSTRUED AS PERMISSION TO REPRODUCE FOR SALE, IN WHOLE OR IN PART, ANY DEVICES SHOWN THEREON.

LET.	REVISION	DATE	BY
T	ALTERNATE FABRIC SPEC. ADDED	3-7-50	HRK
S	REDRAWN & REVISED	1-13-47	C.E.K.

MODEL	PER PLANE	NEXT ASSEMBLY	SUPERSEDES	SUP. BY

PIPER AIRCRAFT CORP.
LOCK HAVEN, PENNA.

DRAFTSMAN	CHECKER	STANDARDS
C.E.K. 1-13-47	R. D. M. 1-13-47	

31082

627

A627

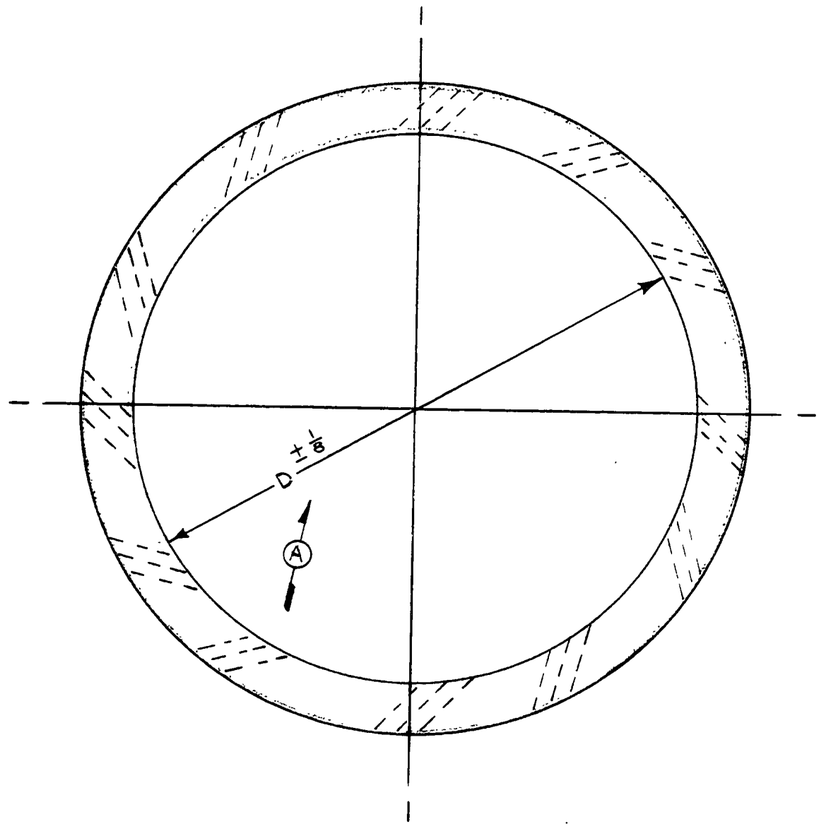

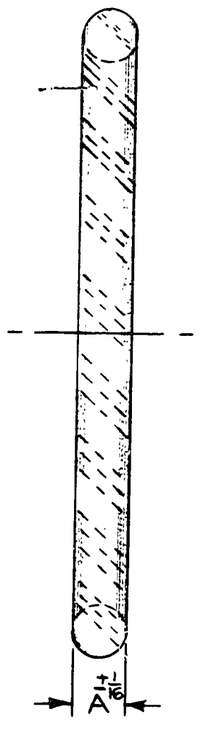

PART NO.	A	D	MATERIAL
31322	3/4	8	ARMY SPEC. NO. 20-23-G TYPE II EXCEPT WITH LOAD RATING 750# ± 50#
31322-2	5/8	8	ARMY SPEC. NO. 20-23-G TYPE II
31322-3	13/16	8	ARMY SPEC. NO. 20-23-G, TYPE II
31322-4	5/8	8 1/2	ARMY SPEC. NO. 20-23-G, TYPE II

F

B D

LIMITS, SHOP PRACTICES AND FINISH. UNLESS OTHERWISE NOTED, TO BE IN ACCORDANCE WITH PIPER SPECIFICATIONS #9 AND #10.

LET.	REVISION	DATE	BY
H	-4 ADDED	9-7-50	FCS
G	-3 ADDED	10-5-49	C.K.
F	MAT'L. SPEC. REVISED	7-18-49	C.K.
E	-2 ADDED	6-30-48	RM.
D	USC.N.A. 10025 WAS 30855	8-24-45	J.H.
C	REDRAWN WITHOUT CHANGE	10-9-44	H.M.Z
B	J3 MODEL REF. ADDED	8-26-43	R.E.T.
A	TOLERANCES ADDED	6-14-43	H.J.G.

MODEL	PER SHIP	NEXT ASSEMBLY	SUPERSEDES	SUP. BY
J3C-65	6	30855		
J5C	6	10025		
J3C-65	6	30855		
J3C-65A	4	31483	30462-8	

PIPER AIRCRAFT CORP.
LOCK HAVEN, PENNA.

PART NO.	No. REQ.	SIZE	DESCRIPTION
		NOTED	NOTED
			MATERIAL

SCALE 6 IN. = 1 FOOT | TOTAL WT. - LBS.
FINISH

RING - SHOCK CORD

DRAWN	CHECKED	APPROVED
M.G.S. 3-5-43	L.E.K. 4-7-43	

31322

6-28

A628

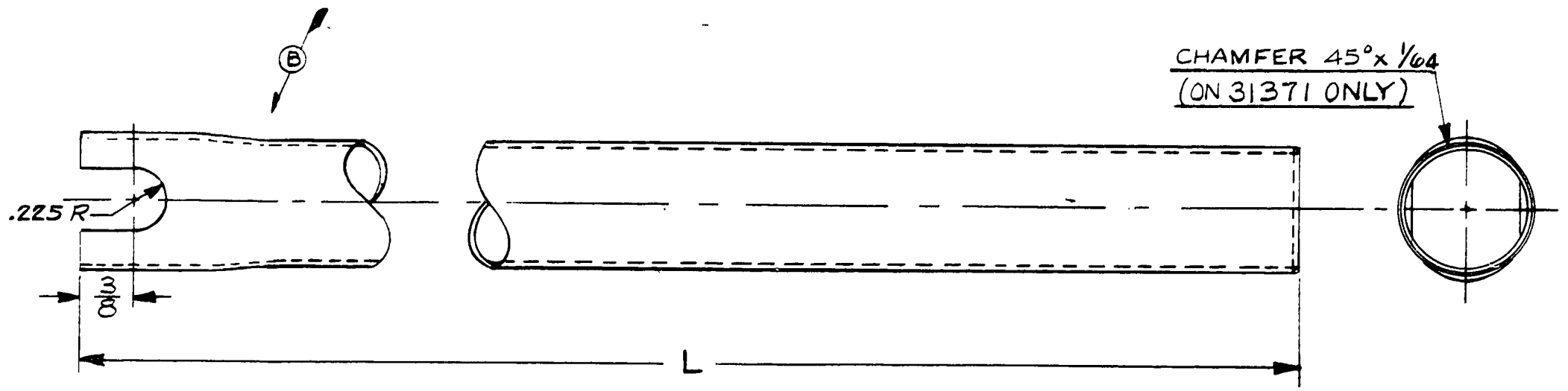

TUBE NO.	L	TUBE SIZE	MATERIAL
31371	24 7/8	7/8 x .035	#4130 S.S. TUBE
31371-2	16 3/16	7/8 x .049	#4130 STL. TUBE
31371-3	16 11/16	7/8 x .049	#4130 STL. TUBE

LET	REVISION	DATE	BY
M	REDRAWN WITHOUT CHANGE	6-19-51	C.E.B.
L	-3 ADDED	9-7-50	F.C.S.
K	16 3/16 WAS 16 13/16	4-14-50	H.R.K.
J	-2 & TABLE ADDED	3-2-50	H.R.K.
H	MAT'L. SPEC. REVISED	1-7-44	A.I.N.
G	VIEW ADDED	8-31-43	R.R.F.
F	J3 MODEL REF. ADDED	8-27-43	R.E.T.
E	SEAMLESS REM. FROM SPEC.	8-23-43	L.R.
D	SPEC. REVISED	5-19-43	C.K.
C	PILOT HOLE REMOVED	5-19-43	C.K.
B	.225 R WAS 7/32 R	4-15-43	J.E.C.
A	J3, L-4B MODEL REF. REMOVED	4-6-43	M.G.S.

MODEL	PER PLANE	NEXT ASSEMBLY	SUPERSEDES	SUP. BY
J3	X	31382	30951	
L-4A	X	31382	30951	

THIS DRAWING IS THE PROPERTY OF THE PIPER AIRCRAFT CORP. AND ITS POSSESSION BY UNAUTHORIZED PERSONS SHALL NOT BE CONSTRUED AS PERMISSION TO REPRODUCE FOR SALE IN WHOLE OR IN PART ANY DEVICES SHOWN THEREON.

PIPER AIRCRAFT CORP.
LOCK HAVEN, PENNA.

PART NO.	NO. REQ.	SIZE	DESCRIPTION
		NOTED	NOTED

MATERIAL

SCALE FULL SIZE | TOTAL WT.—LBS.

FINISH—PIPER SPECIFICATION # 10

MANUFACTURING PRACTICES—PIPER SPECIFICATION # 9

TUBE - LONG SHOCK STRUT

DRAFTSMAN	CHECKER	STANDARDS
C.K. 3-12-43	L.E.K. 3-15-43	

31371

A271

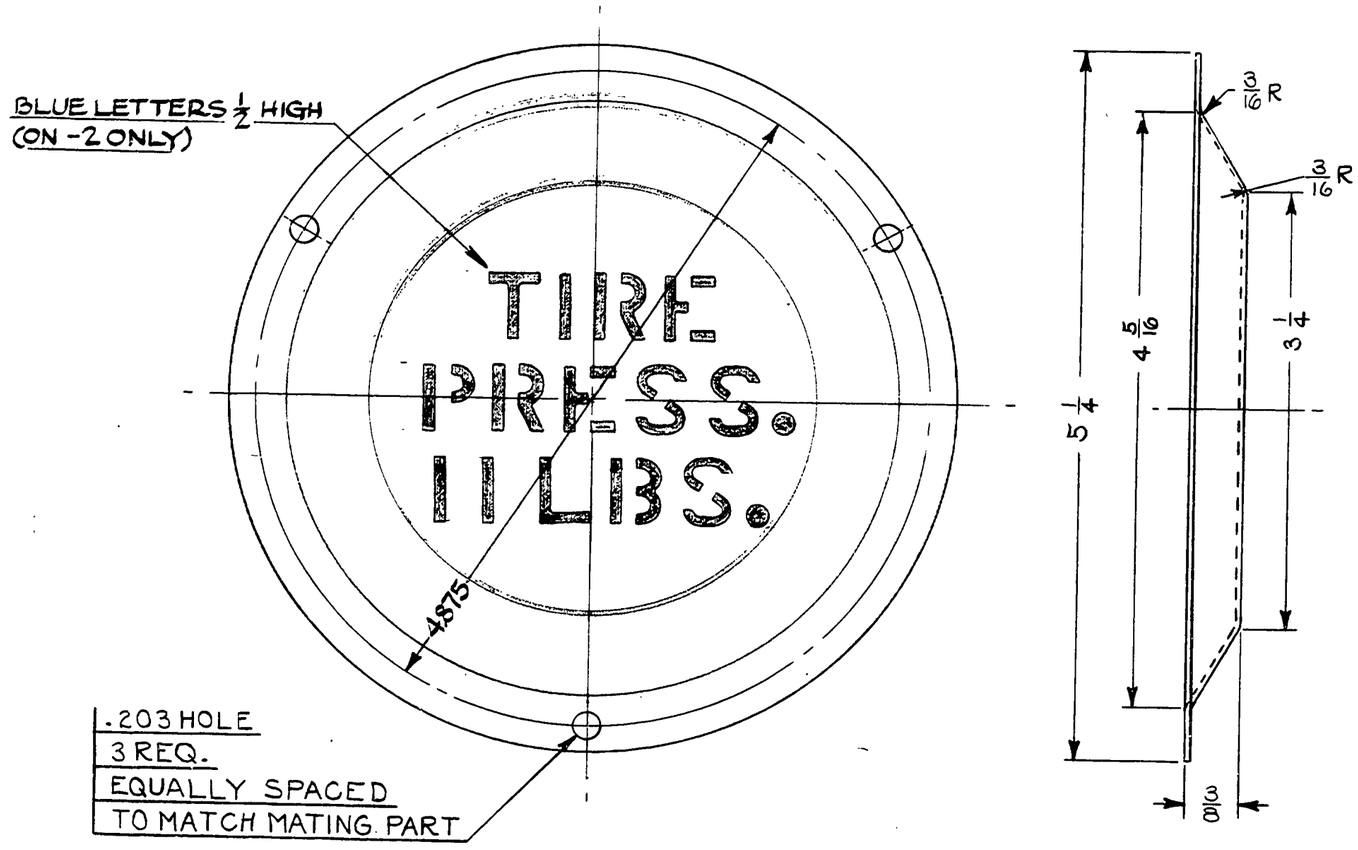

PART NO.	REMARKS
31702	WITHOUT STENCIL
31702-2	WITH STENCIL

LET.	REVISION	DATE	BY
D	31702-2 ADDED	2-16-48	DC
C	J5C N.A. 10025 WAS 31293	4-30-46	L.P.
B	REDRAWN & REVISED	4-23-46	HMZ

MODEL	PER PLANE	NEXT ASSEMBLY	SUPERSEDES	SUP. BY
J3	2	31513		
N50	2	10025		

THIS DRAWING IS THE PROPERTY OF THE PIPER AIRCRAFT CORP. AND ITS POSSESSION BY UNAUTHORIZED PERSONS SHALL NOT BE CONSTRUED AS PERMISSION TO REPRODUCE FOR SALE, IN WHOLE OR IN PART. ANY DEVICES SHOWN THEREON.

PIPER AIRCRAFT CORP.
LOCK HAVEN, PENNA.

PART No.	No. REQ.	SIZE	DESCRIPTION
		.032 X 5 ½ X 5 ½	3S-½ H. ALUM.
		MATERIAL	

SCALE FULL SIZE — TOTAL WT.—LBS.

FINISH—PIPER SPECIFICATION #10

MANUFACTURING PRACTICES—PIPER SPECIFICATION #9

CAP – HUB

DRAFTSMAN	CHECKER	STANDARDS
HMZ 4-23-46	R.E.T. 4-23-46	

31702

629

A629

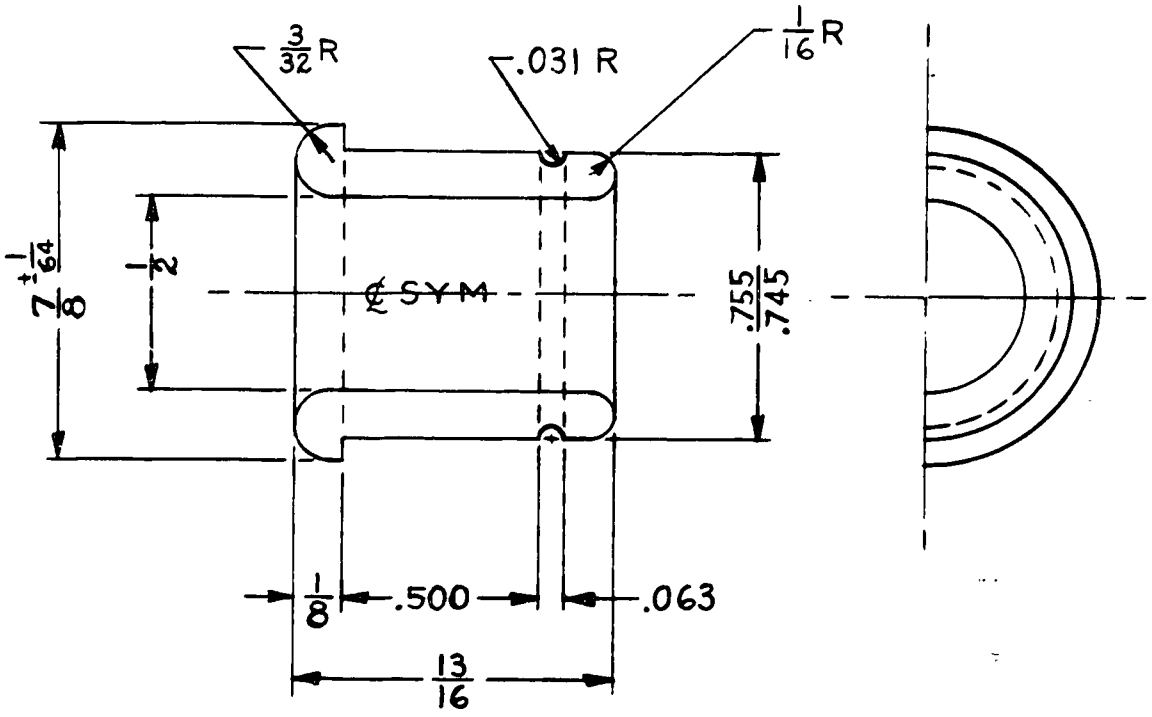

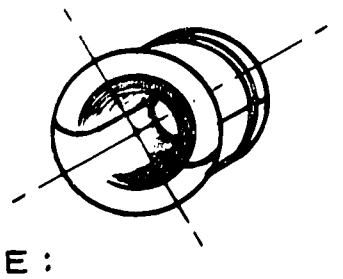

NOTE:
THIS PART USED IN PAIRS TO FORM FAIRLEAD AS SHOWN.

LET	REVISION	DATE	BY
J	REDRAWN & REVISED	6-20-51	C.K.

MODEL	PER PLANE	NEXT ASSEMBLY	SUPERSEDES	SUP. BY

THIS DRAWING IS THE PROPERTY OF THE PIPER AIRCRAFT CORP. AND ITS POSSESSION BY UNAUTHORIZED PERSONS SHALL NOT BE CONSTRUED AS PERMISSION TO REPRODUCE FOR SALE IN WHOLE OR IN PART ANY DEVICES SHOWN THEREON.

PIPER AIRCRAFT CORP.
LOCK HAVEN, PENNA.

PART NO.	NO. REQ.	SIZE	DESCRIPTION / MATERIAL
		7/8 DIA × 13/16	HARD FIBRE

SCALE TWICE SIZE | TOTAL WT.—LBS.

FINISH—PIPER SPECIFICATION # 10

MANUFACTURING PRACTICES—PIPER SPECIFICATION # 9

SEGMENT-CABLE FAIRLEAD

DRAFTSMAN	CHECKER	STANDARDS
C. E. K. 6-20-51	H. R. K. 6-21-51	

40071

272

A272

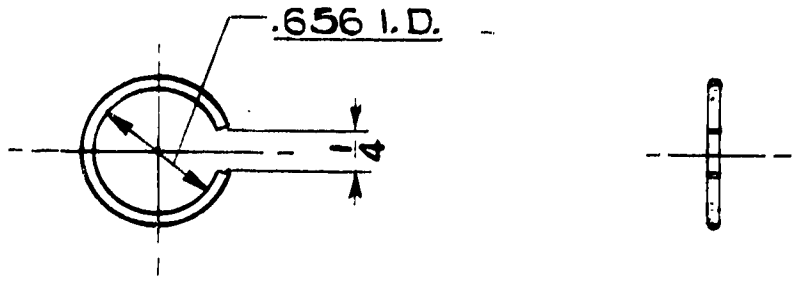

									.059 x 1 15/16	SPRING STEEL WIRE
								PART NO.	NO. REQ.	SIZE / DESCRIPTION / MATERIAL
								SCALE FULL SIZE		TOTAL WT.—LBS.
								FINISH—PIPER SPECIFICATION # 10		
								MANUFACTURING PRACTICES—PIPER SPECIFICATION # 9		
				MODEL	PER PLANE	NEXT ASSEMBLY	SUPERSEDES	SUP. BY	RING - FAIRLEAD SNAP	
P	REDRAWN & REVISED	6-13-51	I.EM.	THIS DRAWING IS THE PROPERTY OF THE PIPER AIRCRAFT CORP. AND ITS POSSESSION BY UNAUTHORIZED PERSONS SHALL NOT BE CONSTRUED AS PERMISSION TO REPRODUCE FOR SALE IN WHOLE OR IN PART ANY DEVICES SHOWN THEREON.					I.E.M. 6-13-51	40081
LET	REVISION	DATE	BY	PIPER AIRCRAFT CORP. LOCK HAVEN, PENNA.					DRAFTSMAN	CHECKER / STANDARDS

273

A 273

-8 BELL CRANK(FIN.) L.H.
-7 BELL CRANK(FIN)R.H.

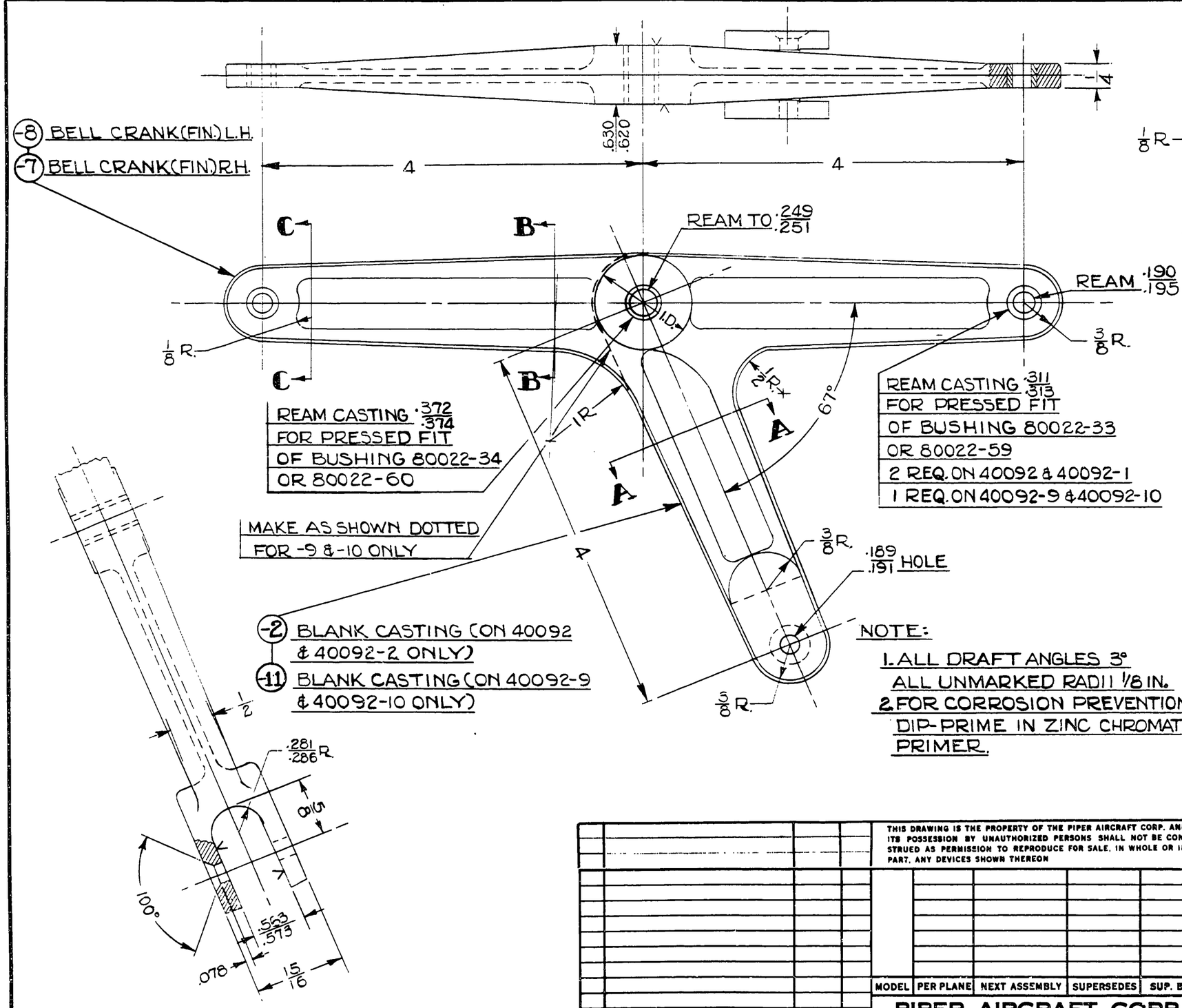

-2 BLANK CASTING (ON 40092 & 40092-2 ONLY)
-11 BLANK CASTING (ON 40092-9 & 40092-10 ONLY)

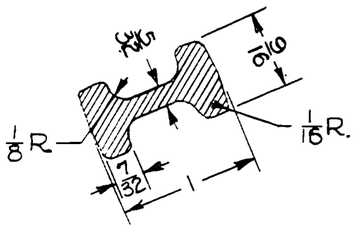

SECTION A-A

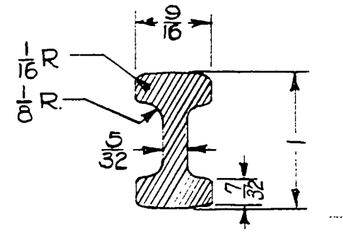

SECTION B-B

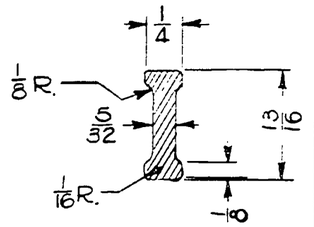

SECTION C-C

40092 L.H. SHOWN.
40092-1 R.H. BOLT HOLE COUNTERSUNK ON OPPOSITE SIDE OF PUSH-PULL ARM.
40092-10 L.H. AS SHOWN DOTTED.
40092-9 R.H. AS SHOWN DOTTED WITH BOLT HOLE C'SUNK ON OPPOSITE SIDE OF PUSH-PULL ARM.

NOTE:
1. ALL DRAFT ANGLES 3° ALL UNMARKED RADII 1/8 IN.
2. FOR CORROSION PREVENTION DIP-PRIME IN ZINC CHROMATE PRIMER.

PART NO.	NO. REQ.	NAME / MATERIAL
80022-60, 80022-34, 80022-59, 80022-33	1 NOTED	BUSHINGS
-8	1	40092 LESS BUSHINGS
-7	1	40092-1 LESS BUSHINGS
-11	1	BLANK CASTING ALCOA 195T6 OR FRONTIER 40
-2	1	BLANK CASTING ALCOA 195T6 OR FRONTIER 40

SCALE FULL SIZE | TOTAL WT.-LBS.
FINISH-PIPER SPECIFICATION #10
MANUFACTURING PRACTICES-PIPER SPECIFICATION #9

BELL CRANK ASSEMBLY-AILERON

THIS DRAWING IS THE PROPERTY OF THE PIPER AIRCRAFT CORP. AND ITS POSSESSION BY UNAUTHORIZED PERSONS SHALL NOT BE CONSTRUED AS PERMISSION TO REPRODUCE FOR SALE, IN WHOLE OR IN PART, ANY DEVICES SHOWN THEREON

LET.	REVISION	DATE	BY
M	REDRAWN & REVISED	6-4-51	I.E.M.

MODEL	PER PLANE	NEXT ASSEMBLY	SUPERSEDES	SUP. BY

PIPER AIRCRAFT CORP.
LOCK HAVEN, PENNA.

DRAFTSMAN	CHECKER	STANDARDS
I.E.M. 6-4-51	H.R.K. 6-5-51	

40092

630

A630

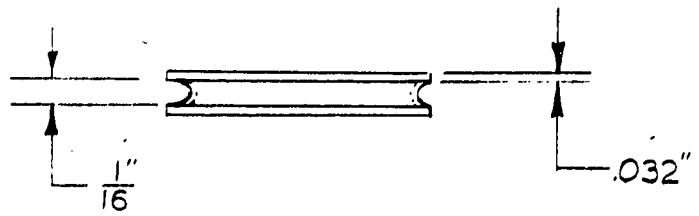

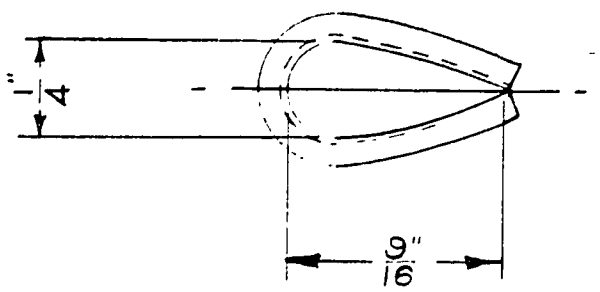

MAKE PART FROM AN100-3

Limits and shop practices, unless otherwise noted, to be in accordance with Piper Specification #95#10

PART No.	No. REQ.	SIZE	DESCRIPTION
		NOTED	STEEL
		MATERIAL	

SCALE TWICE SIZE

THIMBLE- FLOAT BUNGEE CABLE

MODEL	PER SHIP	NEXT ASSEMBLY	SUPERSEDES	SUPERSEDED BY
J5C	2	40123		
HE-1	2	40123		
J3	2	40123		
J5	2	40123		

LET.	REVISION	DATE	SR.	BY
A	J5C MODEL REF. ADDED	4-6-44		I.D.B.

PIPER AIRCRAFT CORP.
LOCK HAVEN. PENNA.

DRAWN	CHECKED	APPROVED
R.C.M. 6-30-41	RRB 7-3-41	

40111

3188-L A. & B. SMITH CO., PGH., PA.

274

A274

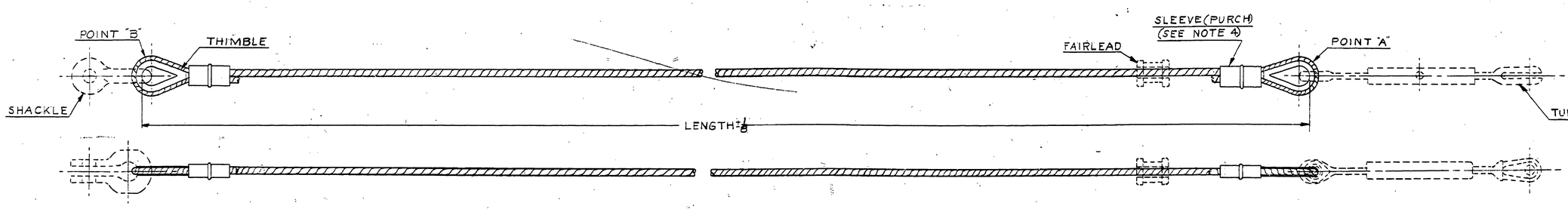

ASSY. NO.	NAME OF CABLE	MATERIAL	LENGTH (SEE NOTE 2)	TYPE OF FITTINGS POINT "A" (SEE NOTE 2)	POINT "B"	THIMBLE NO.	REQ.	FAIRLEAD PART NO.	REQ.	SLEEVE PART NO.	REQ.	REMARKS
40123-2	REAR RUDDER	1/8 DIA. 7×19 GAL. AIRCRAFT CORD	182 13/16	TURNBUCKLE	AN115-16	AN100-4	2			18-3-M	2	
40123-3	AILERON (TO LOWER HORN)	1/8 DIA. 7×19 GAL. AIRCRAFT CORD	167 15/16	TURNBUCKLE		AN100-4	2			18-3-M	2	
40123-4	AILERON (TO UPPER HORN)	1/8 DIA. 7×19 GAL. AIRCRAFT CORD	174 13/16	TURNBUCKLE	AN115-16	AN100-4	2	42911	2	18-3-M	2	TO BE USED WITH LIFT STRUT 11313 & 12363 WITHOUT BUSHING INSTALLED ON 12953
40123-5	ELEVATOR (TO UPPER HORN)	1/8 DIA. 7×19 GAL. AIRCRAFT CORD	137 1/4	TURNBUCKLE	AN115-16	AN100-4	2			18-3-M	2	
40123-6	ELEVATOR (TO LOWER HORN)	1/8 DIA. 7×19 GAL. AIRCRAFT CORD	136 1/8	TURNBUCKLE		AN100-4	2			18-3-M	2	
40123-7	FRONT RUDDER UP. PARKING BRAKE	1/8 DIA. 7×19 GAL. AIRCRAFT CORD	25 9/16	AN115-16	AN115-16	AN100-4	2			18-3-M	2	
40123-8	BUNGEE	1/16 DIA. 7×7 GAL. AIRCRAFT CORD	19 3/4	NONE	NONE	40111	2			18-1-C	2	
40123-9	RUDDER	1/8 DIA. 7×19 GAL. AIRCRAFT CORD	200 3/8	TURNBUCKLE	AN115-16	AN100-4	2			18-3-M	2	
40123-10	ELEVATOR (TO LOWER HORN)	1/8 DIA. 19 STRAND NON FLEX. STL. CABLE	156 1/4	TURNBUCKLE	AN115-32	AN100-4	2			18-3-M	2	
40123-11	ELEVATOR (TO UPPER HORN)	1/8 DIA. 19 STRAND NON FLEX. STL. CABLE	157 5/8	TURNBUCKLE	AN115-32	AN100-4	2			18-3-M	2	
40123-12	LEFT AILERON BALANCE	1/8 DIA. 19 STRAND NON FLEX. STL. CABLE	93 1/8	TURNBUCKLE	AN115-16	AN100-4	2			18-3-M	2	
40123-13	RIGHT AILERON BALANCE	1/8 DIA. 19 STRAND NON FLEX. STL. CABLE	175 1/8	AN 115-16	AN115-16	AN100-4	2			18-3-M	2	
40123-14	LONG AILERON CONTROL STICK	1/8 DIA. 7×19 GAL. AIRCRAFT CORD	161 7/8	TURNBUCKLE	AN115-16	AN100-4	2			18-3-M	2	
40123-15	SHORT AILERON CONTROL STICK	1/8 DIA. 7×19 GAL. AIRCRAFT CORD	23 15/16	TURNBUCKLE	AN115-32	AN100-4	2			18-3-M	2	
40123-16	LOWER PARKING BRAKE	3/32 DIA. 6×7 GAL AIRCRAFT CORD	38	NONE	NONE	NONE	-			——	—	
40123-18	L&R AIL. BALANCE, FRONT. AILERON	1/8 DIA. 19 STRAND NON FLEX. STL. CABLE	98 1/2	NONE	AN115-16	AN100-4	2			18-3-M	2	
40123-19	CENTER AILERON BALANCE	1/8 DIA. 19 STRAND NON FLEX. STL. CABLE	61 1/8	TURNBUCKLE	AN115-16	AN100-4	2			18-3-M	2	
40123-21	AILERON CONTROL STICK	1/8 DIA. 7×19 GAL. AIRCRAFT CORD	90 1/8	TURNBUCKLE	AN115-16	AN100-4	2			18-3-M	2	
40123-22	ELEVATOR (TO UPPER HORN)	1/8 DIA. 7×19 GAL. AIRCRAFT CORD	133 3/8	TURNBUCKLE	AN115-16	AN100-4	2			18-3-M	2	
40123-23	ELEVATOR (TO LOWER HORN)	1/8 DIA. 7×19 GAL. AIRCRAFT CORD	131 3/4	TURNBUCKLE	-	AN100-4	2			18-3-M	2	
40123-24	UPPER PARKING BRAKE	1/8 DIA. 7×19 GAL. AIRCRAFT CORD	31 1/16	NONE	AN115-16	AN100-4	2			18-3-M	2	
40123-25	LOWER PARKING BRAKE	3/32 DIA. 6×7 GAL. AIRCRAFT CORD	35	NONE	NONE	NONE	-			——	—	DIP BOTH ENDS OF CABLE IN SOLDER
40123-26	BRAKE PEDAL CONNECTING	1/8 DIA. 7×19 GAL. AIRCRAFT CORD	21 5/8	TURNBUCKLE	AN115-16	AN100-4	2			18-3-M	2	
40123-27	FLOAT RUDDER	3/32 DIA. 6×7 GAL. AIRCRAFT CORD	106 5/16	TURNBUCKLE	NONE	AN100-4	2			18-2-G	2	
40123-28	AILERON (TO UPPER HORN)	1/8 DIA. 7×19 GAL. AIRCRAFT CORD	174 3/16	TURNBUCKLE		AN100-4	2	42911	1	18-3-M	2	
40123-29	RUDDER	1/8 DIA. 7×19 GAL. AIRCRAFT CORD	29 3/4	AN115-16	AN115-16	AN100-4	2			18-3-M	2	
40123-30	RUDDER	1/8 DIA. 7×19 GAL. AIRCRAFT CORD	209 3/16	TURNBUCKLE	AN115-16	AN100-4	2			18-3-M	2	
40123-34	AILERON (TO UPPER HORN)	1/8 DIA. 7×19 GAL. AIRCRAFT CORD	174 5/16	TURNBUCKLE		AN 100-4	2	42911	1	18-3-M	2	
40123-35	BUNGEE	1/16 DIA. 7×7 GAL. AIRCRAFT CORD	20 5/16	NONE	NONE	40111	2			18-1-C	2	
40123-36	REAR RUDDER	1/8 DIA. 7×19 FLEXIBLE ST. STL. AIRCRAFT CABLE	182 13/16	TURNBUCKLE	AN115-16	AN 100-4	2			18-3-M	2	USED ON SEAPLANES
40123-37	FRONT RUDDER UP. PARKING BRAKE	1/8 DIA. 7×19 FLEXIBLE ST. STL. AIRCRAFT CABLE	25 5/16	AN 115-16	AN 115-16	AN 100-4	2			18-3-M	2	USED ON SEAPLANES
40123-38	AILERON CONTROL STICK	1/8 DIA. 7×19 FLEXIBLE ST. STL. AIRCRAFT CABLE	90 1/8	TURNBUCKLE	AN115-16	AN100-4	2			18-3-M	2	USED ON SEAPLANES
40123-39	ELEVATOR (TO UPPER HORN)	1/8 DIA. 7×19 FLEXIBLE ST. STL. AIRCRAFT CABLE	133 3/8	TURNBUCKLE	AN115-16	AN100-4	2			18-3-M	2	USED ON SEAPLANES
40123-40	ELEVATOR (TO LOWER HORN)	1/8 DIA. 7×19 FLEXIBLE ST. STL. AIRCRAFT CABLE	131 3/4	TURNBUCKLE	AN115-16	AN100-4	2			18-3-M	2	USED ON SEAPLANES
40123-41	L&R AIL. BALANCE, FRONT AILERON	1/8 DIA. 19 NON FLEXIBLE ST. STL. AIRCRAFT CABLE	98 1/2	NONE	AN115-16	AN100-4	2			18-3-M	2	USED ON SEAPLANES
40123-42	CENTER AILERON BALANCE	1/8 DIA. 19 NON FLEXIBLE ST. STL. AIRCRAFT CABLE	61 1/8	TURNBUCKLE	AN115-16	AN100-4	2			18-3-M	2	USED ON SEAPLANES
40123-43	BUNGEE	1/16 DIA. 7×7 FLEXIBLE ST. STL. AIRCRAFT CABLE	20 5/16	NONE	NONE	40111	2			18-1-C	2	USED ON SEAPLANES
40123-44	AILERON (TO LOWER HORN)	1/8 DIA. 7×19 FLEXIBLE ST. STL. AIRCRAFT CABLE	167 15/16	TURNBUCKLE		AN100-4	2			18-3-M	2	USED ON SEAPLANES
40123-45	AILERON (TO UPPER HORN)	1/8 DIA. 7×19 FLEXIBLE ST. STL. AIRCRAFT CABLE	174 3/16	TURNBUCKLE		AN100-4	2	42911	1	18-3-M	2	USED ON SEAPLANES
40123-46	BUNGEE	1/16 DIA. 7×7 FLEXIBLE ST. STL. AIRCRAFT CABLE	19 3/4	NONE	NONE	40111	2			18-1-C	2	USED ON SEAPLANES
40123-47	AILERON CONTROL STICK	1/8 DIA. 7×19 GAL. AIRCRAFT CORD	106 1/2	TURNBUCKLE	AN115-32	AN100-4	2			18-3-M	2	
40123-48	ELEVATOR (TO UPPER HORN)	1/8 DIA. 19 STRAND NON FLEX STL. CABLE	179 15/16	TURNBUCKLE	AN115-16	AN100-4	2			18-3-M	2	
40123-49	AILERON (TO UPPER HORN)	1/8 DIA. 7×19 GAL. AIRCRAFT CORD	103 5/8	TURNBUCKLE	AN115-16	AN100-4	2			18-3-M	2	
40123-50	BUNGEE	1/16 DIA. 7×7 GAL. AIRCRAFT CORD	15 1/2	NONE	NONE	40111	2			18-1-C	2	
40123-51	ELEVATOR (TO UPPER HORN)	1/8 DIA. 19 STRAND NON FLEX. STL. CABLE	140 1/2	TURNBUCKLE	NONE	AN100-4	2			18-3-M	2	
40123-52	ELEVATOR (TO LOWER HORN)	1/8 DIA. 7×19 GAL. AIRCRAFT CORD	156 1/2	TURNBUCKLE	NONE	AN100-4	2			18-3-M	2	
40123-53	AILERON LEFT BALANCE	1/8 DIA. 19 STRAND NON FLEX. STL. CABLE	107	AN115-16	NONE	AN100-4	2			18-3-M	2	
40123-54	AILERON RIGHT BALANCE	1/8 DIA. 19 STRAND NON FLEX. STL. CABLE	107	TURNBUCKLE	NONE	AN 100-4	2			18-3-M	2	
40123-55	AILERON	1/8 DIA. 19 STRAND NON FLEX. STL. CABLE	103 1/2	NONE	AN115-16	AN100-4	2			18-3-M	2	
40123-56	AILERON CENTER BALANCE	1/8 DIA. 19 STRAND NON FLEX. STL. CABLE	44 1/4	AN115-16	AN115-16	AN100-4	2			18-3-M	2	
40123-57	TORQUE TUBE HORN CONNECTOR	1/8 DIA. 7×19 GAL. AIRCRAFT CORD	11 7/8	TURNBUCKLE	AN115-16	AN100-4	2			18-3-M	2	
40123-58	FRONT ELEVATOR	1/8 DIA. 7×19 GAL. AIRCRAFT CORD	8 3/16	TURNBUCKLE	NONE	AN100-4	2			18-3-M	2	
40123-59	FRONT ELEVATOR	1/8 DIA. 7×19 GAL. AIRCRAFT CORD	25	TURNBUCKLE	NONE	AN 100-4	2			18-3-M	2	
40123-60	ELEVATOR	1/8 DIA. 19 STRAND NON FLEX. STL. CABLE	130	B1262-45	NONE	AN100-4	2			18-3-M	2	
40123-61	BUNGEE	1/16 DIA. 7×7 GAL. AIRCRAFT CORD	22 3/16	NONE	NONE	40111	2			18-1-C	2	
40123-62	BUNGEE	1/16 DIA. 7×7 GAL. AIRCRAFT CORD	19 5/16	NONE	NONE	40111	2			18-1-C	2	
40123-63	AILERON (TO LOWER HORN)	1/8 DIA. 7×19 GAL. AIRCRAFT CORD	130 1/2	TURNBUCKLE	B1262-47	AN100-4	2			18-3-M	2	
40123-64	AILERON BALANCE	1/8 DIA. 7×19 GAL. AIRCRAFT CORD	141 5/8	TURNBUCKLE	AN115-16	AN100-4	2			18-3-M	2	
40123-65	FLAP	1/8 DIA. 7×19 GAL. AIRCRAFT CORD	8 1/2	NONE	AN115-16	AN100-4	2			18-3-M	2	
40123-66	BUNGEE	1/16 DIA. 7×7 GAL. AIRCRAFT CORD	20 9/16	NONE	NONE	40111	2			18-1-C	2	
40123-67	ELEVATOR	1/8 DIA. 19 STRAND NON FLEX. STL. CABLE	144 1/4	TURNBUCKLE	10866	AN100-4	2			18-3-M	2	
40123-68	ELEVATOR	1/8 DIA. 7×19 GAL. AIRCRAFT CORD	143 3/8	TURNBUCKLE	10866	AN100-4	2			18-3-M	2	
40123-69	AILERON BALANCE	1/8 DIA. 7×19 GAL. AIRCRAFT CORD	74	TURNBUCKLE	AN115-16	AN100-4	2			18-3-M	2	
40123-70	BUNGEE	1/16 DIA. 7×7 GAL. AIRCRAFT CORD	20 1/2	NONE	NONE	40111	2			18-1-C	2	
40123-71	AILERON (TO LOWER HORN)	1/8 DIA. 7×19 FLEXIBLE ST. STL. AIRCRAFT CABLE	130 1/2	TURNBUCKLE	B1262-47	AN100-4	2			18-3-M	2	USED ON SEAPLANES
40123-72	AILERON BALANCE	1/8 DIA. 7×19 FLEXIBLE ST. STL. AIRCRAFT CABLE	141 5/8	TURNBUCKLE	AN115-16	AN100-4	2			18-3-M	2	USED ON SEAPLANES
40123-73	BUNGEE	1/8 DIA. 7×7 FLEXIBLE ST. STL. AIRCRAFT CABLE	22 3/16	NONE	NONE	40111	2			18-1-C	2	USED ON SEAPLANES
40123-74	BUNGEE	1/16 DIA. 7×7 GAL. AIRCRAFT CORD	14 1/16	NONE	AN115-16	40111	2			18-1-C	2	
40123-75	BUNGEE	1/16 DIA. 7×7 GAL. AIRCRAFT CORD	4 1/4	NONE	B1322-15	40111	2			18-1-C	2	ATTACH. B1322-15 AT HOLE "E" SEE DWG. B1322
40123-76	AILERON (TO UPPER HORN)	1/8 DIA. 7×19 GAL. AIRCRAFT CORD	173 11/16	TURNBUCKLE		AN100-4	2	42911	1	18-3-M	2	
40123-77	FLAP	1/8 DIA. 7×19 GAL. AIRCRAFT CORD	35	TURNBUCKLE	AN115-16	AN100-4	2			18-3-M	2	
40123-78	BUNGEE	1/16 DIA. 7×7 GAL. AIRCRAFT CORD	21 1/4	NONE	NONE	40111	2			18-1-C	2	
40123-79	BUNGEE	1/16 DIA. 7×7 GAL. AIRCRAFT CORD	15 1/2	NONE	AN115-16	40111	2			18-1-C	2	
40123-80	FLAP	1/8 DIA. 7×19 GAL. AIRCRAFT CORD	77 1/8	TURNBUCKLE	AN115-16	AN100-4	2			18-3-M	2	
40123-81	BUNGEE	1/16 DIA. 7×7 FLEXIBLE ST. STL. AIRCRAFT CABLE	20 1/2	NONE	NONE	40111	2			18-1-C	2	USED ON SEAPLANES
40123-82	ELEVATOR	1/8 DIA. 19 NON FLEXIBLE ST. STL. AIRCRAFT CABLE	144 1/4	TURNBUCKLE	10866	AN100-4	2			18-3-M	2	USED ON SEAPLANES
40123-83	ELEVATOR	1/8 DIA. 7×19 FLEXIBLE ST. STL. AIRCRAFT CABLE	143 3/8	TURNBUCKLE	10866	AN100-4	2			18-3-M	2	USED ON SEAPLANES
40123-84	AILERON BALANCE	1/8 DIA. 7×19 FLEXIBLE ST. STL. AIRCRAFT CABLE	74	TURNBUCKLE	AN115-16	AN100-4	2			18-3-M	2	USED ON SEAPLANES
40123-85	FLAP	1/8 DIA. 7×19 FLEXIBLE ST. STL. AIRCRAFT CABLE	77 1/8	TURNBUCKLE	AN115-16	AN100-4	2			18-3-M	2	USED ON SEAPLANES
40123-86	FLAP	1/8 DIA. 7×19 FLEXIBLE ST. STL. AIRCRAFT CABLE	35	TURNBUCKLE	AN115-16	AN100-4	2			18-3-M	2	USED ON SEAPLANES
40123-87	AILERON (TO UPPER HORN)	1/8 DIA. 7×19 FLEXIBLE ST. STL. AIRCRAFT CABLE	173 11/16	TURNBUCKLE		AN100-4	2	42911	1	18-3-M	2	USED ON SEAPLANES
40123-88	BUNGEE	1/16 DIA. 7×7 FLEXIBLE ST. STL. AIRCRAFT CABLE	4 1/4	NONE	B1322-15	40111	2			18-1-C	2	ATTACH. B1322-15 AT HOLE "E" SEE DWG. B1322 (USED ON SEAPLANES)
40123-89	BUNGEE	1/16 DIA. 7×7 FLEXIBLE ST. STL. AIRCRAFT CABLE	21 1/4	NONE	NONE	40111	2			18-1-C	2	USED ON SEAPLANES
40123-90	BUNGEE	1/16 DIA. 7×7 FLEXIBLE ST. STL. AIRCRAFT CABLE	15 1/2	NONE	AN115-16	40111	2			18-1-C	2	USED ON SEAPLANES
40123-91	BRAKE	1/8 DIA. 7×19 GAL. AIRCRAFT CORD	22 3/4	NONE	AN115-16	AN100-4	2	42911	1	18-3-M	2	
40123-92	BUNGEE	1/16 DIA. 7×7 FLEXIBLE ST. STL. AIRCRAFT CABLE	14 1/16	NONE	AN115-16	40111	2			18-1-C	2	USED ON SEAPLANES

NOTES:

1. SEE TABLE FOR TYPE FITTING AT POINTS 'A' & 'B'.
2. WHERE TURNBUCKLE IS SPECIFIED, TURNBUCKLES 40141, 42722, OR 5157-165 (PURCH. AERO SUPPLY MFG. CO.) MAY BE USED. WHEN TURNBUCKLE 40141 IS USED THE LENGTH OF CABLE TO BE MADE 3/8 LONGER THAN DIMENSION SHOWN.
3. ATTACH TURNBUCKLE TO CABLE BEFORE SPLICING.
4. SEE DWG. 42521 FOR CABLE SLEEVE SPLICE.
5. CABLES SHALL BE DIPPED IN "RUST VETO-SOFT" PURCH. E. F. HOUGHTON CO.
6. SLEEVES PURCH. THE NATIONAL TELEPHONE SUPPLY CO.

	REVISION	DATE	BY
BK	-92 ADDED	6-7-42	HRK
BJ	-91 ADDED	10-27-50	HRK
BH	-86, -87, -88, -89 & -90 ADDED	5-3-50	HRK
BG	-81, -82, -83, -84 & -85 ADDED	4-7-50	HRK
BF	-80 ADDED	2-28-50	C.K.
BE	-77, -78 & -79 ADDED	1-5-50	R.C.
BD	LENGTH OF -66, 20 9/16 WAS 19 3/4 LENGTH OF -70 20 9/16 WAS 19 3/4 ADDED	10-5-48	C.K.
BC	LENGTH OF 15 1/2 ADDED FOR -66	10-26-49	R.K.
BB	-74 & -75 ADDED	8-10-48	C.K.
BA	-71, -72, -73 ADDED	7-22-48	R.K.
AZ	-67, -68, -69 & -70 ADDED	7-13-48	C.K.
AY	REDRAWN WITHOUT CHANGE	5-28-48	C.K.

MODEL	PER PLANE	NEXT ASSEMBLY	SUPERSEDES	SUP. BY

THIS DRAWING IS THE PROPERTY OF THE PIPER AIRCRAFT CORP. AND ITS POSSESSION BY UNAUTHORIZED PERSONS SHALL NOT BE CONSTRUED AS PERMISSION TO REPRODUCE FOR SALE, IN WHOLE OR IN PART, ANY DEVICES SHOWN THEREON.

PIPER AIRCRAFT CORP.
LOCK HAVEN, PENNA.

SEE TABLE	SEE TABLE	SEE TABLE	
PART NO.	No. REQ.	MATERIAL	
@SCALE		TOTAL WT.—LBS.	
FINISH—PIPER SPECIFICATION #10			
MANUFACTURING PRACTICES—PIPER SPECIFICATION #9			

CABLE ASSEMBLIES—CONTROL

DRAFTSMAN	CHECKER	STANDARDS
C.E.K. 5-12-49	H.R.K. 5-12-49	

40123

A881

Philadelphia Blue Print Co. 150 8-46

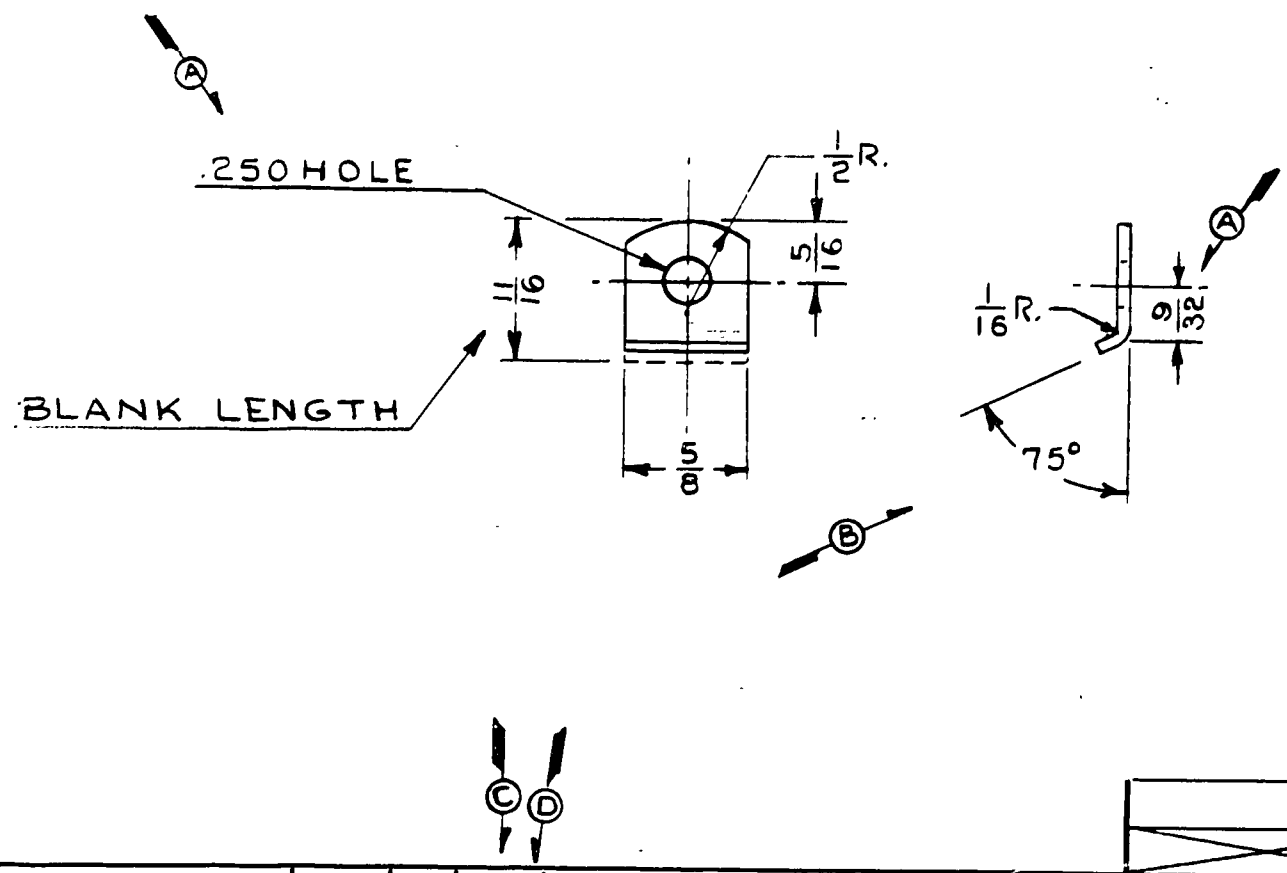

				L-14, L-18	2	41195		
				L-14	2	90600		
				J5D, HE	2	41195		
				J5, J5C	2	41195		
				J5, TG-8	2	41195	D4085 B	
				MODEL	PER PLANE	NEXT ASSEMBLY	SUPERSEDES	SUP. BY

LET	REVISION	DATE	BY
E	REDRAWN WITHOUT CHANGE	5-28-51	I.M.M.
D	J5C MODEL REF. CAN.	9-24-45	I.M.M.
C	L-14 MODEL REF. ADDED	7-3-45	I.D.B.
B	75° ANGLE WAS 65°	8-31-44	E.L.N.
A	DIMENSIONS REVISED	5-12-43	C.E.K.

THIS DRAWING IS THE PROPERTY OF THE PIPER AIRCRAFT CORP. AND ITS POSSESSION BY UNAUTHORIZED PERSONS SHALL NOT BE CONSTRUED AS PERMISSION TO REPRODUCE FOR SALE IN WHOLE OR IN PART ANY DEVICES SHOWN THEREON.

PIPER AIRCRAFT CORP.
LOCK HAVEN, PENNA.

PART NO.	NO. REQ.	SIZE	DESCRIPTION
		.062 x 5/8 x 11/16	#1025 STEEL

MATERIAL

SCALE FULL SIZE | TOTAL WT.—LBS.

FINISH—PIPER SPECIFICATION # 10

MANUFACTURING PRACTICES—PIPER SPECIFICATION # 9

WASHER — FIN TIE
ROD CLEVIS

DRAFTSMAN	CHECKER	STANDARDS
R.C.M. 9-25-41	R.R.B 9-26-41	

40131

275

A275

WAS J3-419 / J3-A412

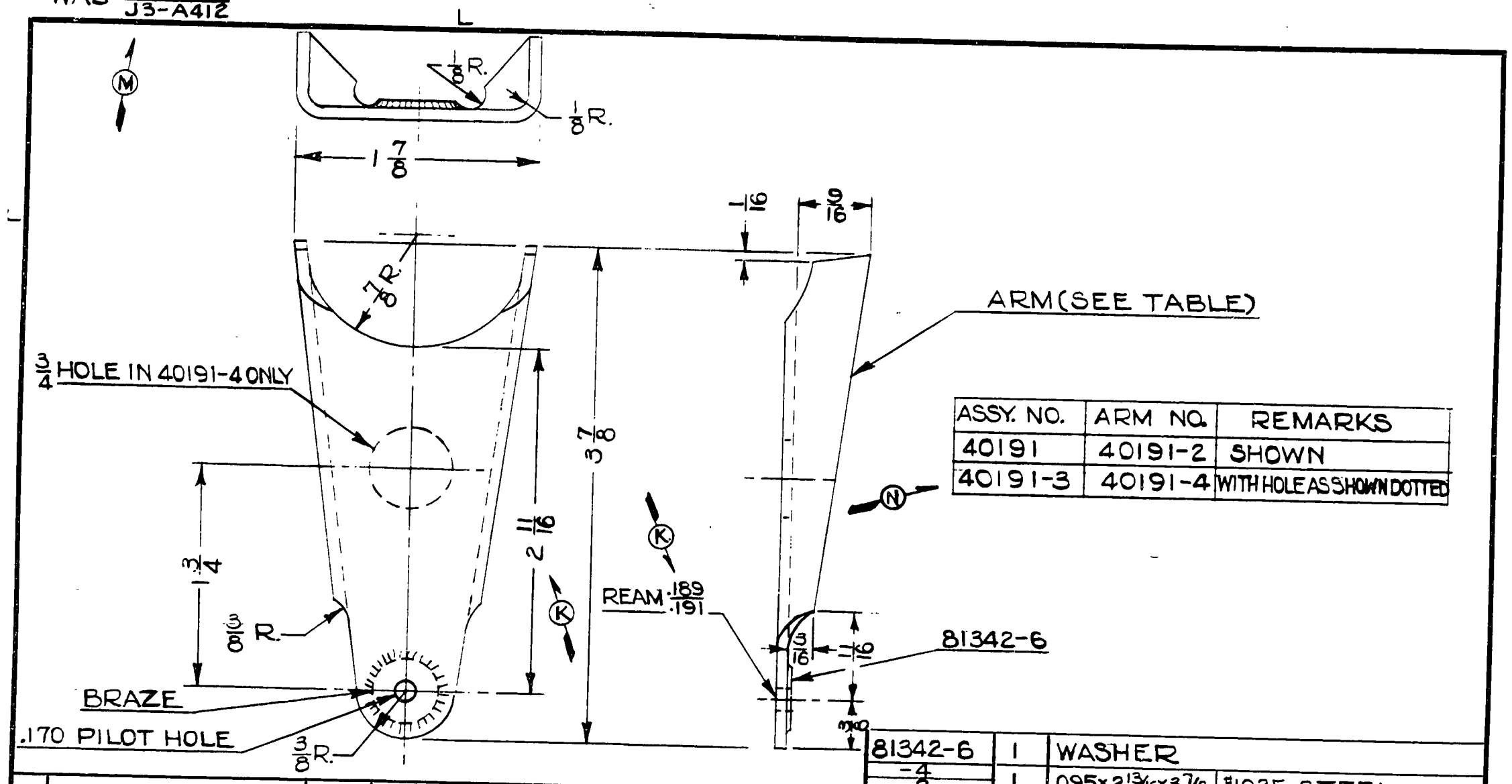

ASSY. NO.	ARM NO.	REMARKS
40191	40191-2	SHOWN
40191-3	40191-4	WITH HOLE AS SHOWN DOTTED

PART NO.	NO. REQ.	SIZE	DESCRIPTION / MATERIAL
81342-6	1	WASHER	
-4 / -2	1	.095×2 13/16×3 7/8	#1025 STEEL

SCALE FULL SIZE | TOTAL WT.—LBS.

FINISH—PIPER SPECIFICATION # 10

MANUFACTURING PRACTICES—PIPER SPECIFICATION # 9

MODEL	PER PLANE	NEXT ASSEMBLY	SUPERSEDES	SUP. BY
L-4AL-4B	1	40223		
HE-1	1	40223		
J5D	1	40223		
J3-TD-8	1	40223		
J5-J5C	1	40223		

LET	REVISION	DATE	BY
O	REDRAWN WITHOUT CHANGE	6-20-51	L.E.M.
N	-3 & -4 ADDED	2-16-49	R.M.
M	J3-419 / J3-A412 WAS 40191 DATED 8-20-41	10-4-43	W.G.T.
L	1/16 DIM. REMOVED	6-7-43	M.G.S.
K	2 11/16 ADDED, NOTE REVISED	6-7-43	M.G.S.
J	40191 REDRAWN	7-27-42	M.G.S.

THIS DRAWING IS THE PROPERTY OF THE PIPER AIRCRAFT CORP. AND ITS POSSESSION BY UNAUTHORIZED PERSONS SHALL NOT BE CONSTRUED AS PERMISSION TO REPRODUCE FOR SALE IN WHOLE OR IN PART ANY DEVICES SHOWN THEREON.

PIPER AIRCRAFT CORP.
LOCK HAVEN, PENNA.

ARM ASSEMBLY—TORQUE TUBE AILERON

DRAFTSMAN	CHECKER	STANDARDS
M.G.S. 7-27-42	C.F.S. 8-4-42	

40191

276.

A 276

WAS J3-420
D 4097-B

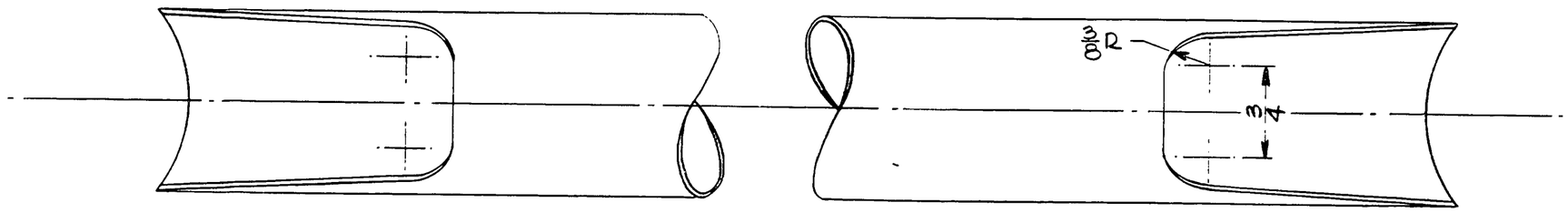

CUT OFF SQUARE AS SHOWN DOTTED ON 40202-4 ONLY.

Ⓑ NOTE: 3/8 R & 3/4 DIM. MEASURED ALONG OUTSIDE SURFACE OF TUBE.

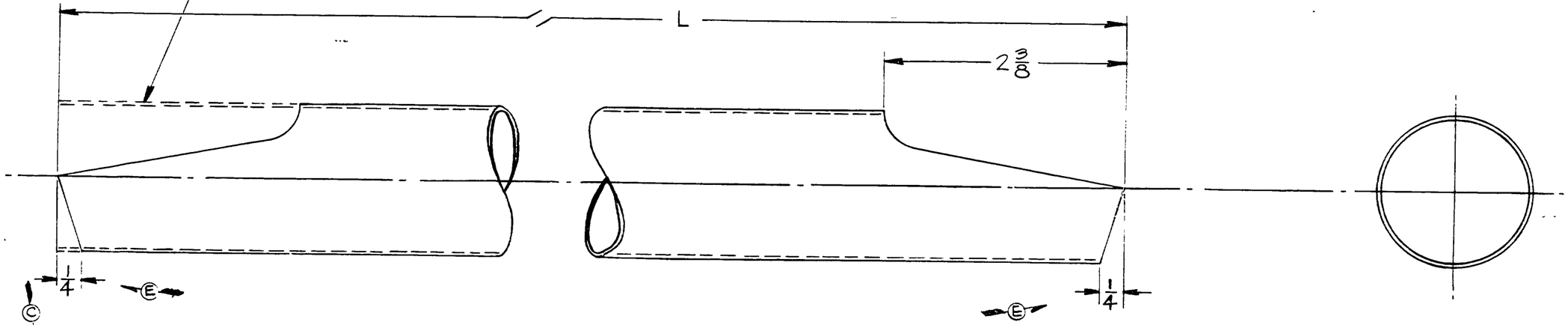

PART NO.	L	MODEL	PER SHIP	NEXT ASSY.
40202-2	29 11/16	J3L-4A, C-6B, TG-6, J5, J5C, J5B, HE-1	X	40223
40202-3	33	TG-8	X	42043
40202-4	28 1/8			

Ⓕ

LET	REVISION	DATE	BY
G	REDRAWN WITHOUT CHANGE	6-21-51	M.G.
F	-4 ADDED	2-26-51	LEM
E	1/4 DIM. ADDED	8-14-43	CEK
D	1 1/2 DIM. REMOVED	6-7-43	MGS
C	29 11/16 WAS 29 3/16 ON -2	5-26-43	RRF
B	3/4 WAS 1/4 & NOTE ADDED	1-8-43	RRF
A	-2 WAS 40202; -3 ADDED	7-21-42	MGS

MODEL	PER PLANE	NEXT ASSEMBLY	SUPERSEDES	SUP. BY
NOTED		NOTED		

THIS DRAWING IS THE PROPERTY OF THE PIPER AIRCRAFT CORP. AND ITS POSSESSION BY UNAUTHORIZED PERSONS SHALL NOT BE CONSTRUED AS PERMISSION TO REPRODUCE FOR SALE IN WHOLE OR IN PART ANY DEVICES SHOWN THEREON.

PIPER AIRCRAFT CORP.
LOCK HAVEN, PENNA.

PART NO.	NO. REQ.	SIZE	DESCRIPTION / MATERIAL
		1 1/2 x .035 x NOTED	#4130 ST. TUBE

SCALE FULL SIZE — TOTAL WT.—LBS.
FINISH—PIPER SPECIFICATION # 10
MANUFACTURING PRACTICES—PIPER SPECIFICATION # 9

TUBE—TORQUE

DRAFTSMAN	CHECKER	STANDARDS
W.R. ENERGY 8-20-41	W.H.O. 9-2-41	

40202

631

A631

WAS 40212 DATED 8-21-41

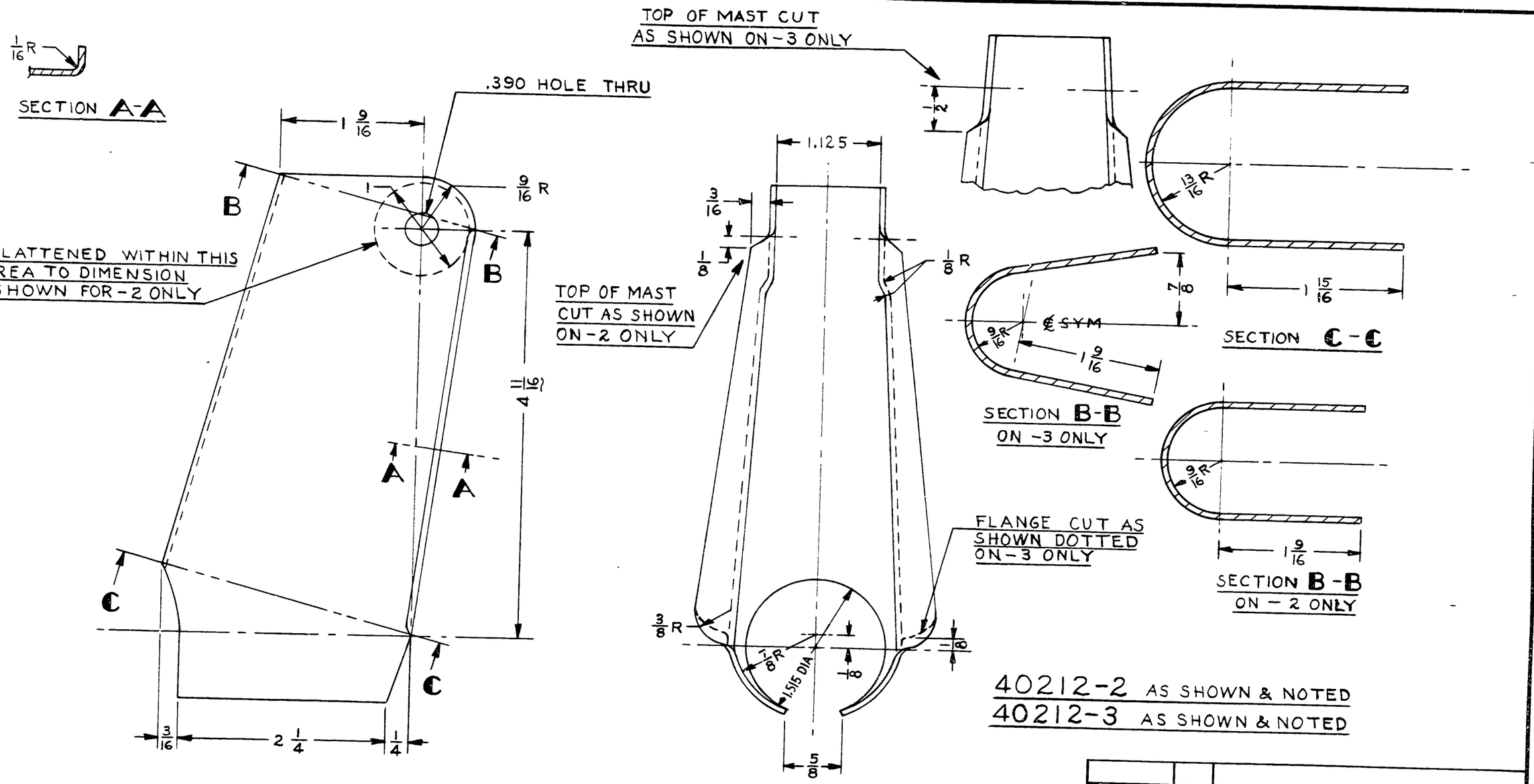

40212-2 AS SHOWN & NOTED
40212-3 AS SHOWN & NOTED

THIS DRAWING IS THE PROPERTY OF THE PIPER AIRCRAFT CORP. AND ITS POSSESSION BY UNAUTHORIZED PERSONS SHALL NOT BE CONSTRUED AS PERMISSION TO REPRODUCE FOR SALE, IN WHOLE OR IN PART, ANY DEVICES SHOWN THEREON

LET.	REVISION	DATE	BY
J	REDRAWN & REVISED	6-5-51	C.K.

MODEL	PER PLANE	NEXT ASSEMBLY	SUPERSEDES	SUP. BY

PIPER AIRCRAFT CORP.
LOCK HAVEN, PENNA.

PART No.	No. REQ.	SIZE	DESCRIPTION
		.062×7×7¼	#1025 STEEL
		MATERIAL	

SCALE FULL SIZE — TOTAL WT.—LBS.
FINISH—PIPER SPECIFICATION #10
MANUFACTURING PRACTICES—PIPER SPECIFICATION #9

MAST-TORQUE TUBE

DRAFTSMAN	CHECKER	STANDARDS
C.E.K. 6-5-51	H.R.K. 6-5-51	

40212

632

A632

WAS J3-A415

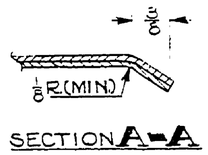

SECTION A-A

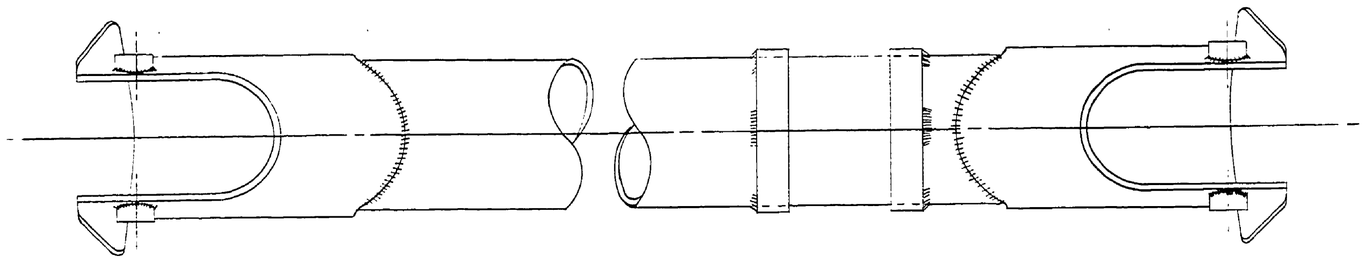

INSIDE ENDS OF BUSHINGS MUST BE FINISHED SMOOTH & PARALLEL WITH ℄ OF MAST.

.249/.251 REAM THRU AFTER WELDING

29 11/16

1.125

80012-59

(-2) MASST SUB-ASS'Y.

40212-2

4 11/16

80022-43 WELDED TO TORQUE TUBE WITH 4-1/2 TACK WELDS.

40202-2 (SEE NOTE 1)

1/4 REF.

1 5/8

83° REF.

1/4

A

A

80°

13/32

(-3) TORQUE TUBE SUB-ASSEMBLY

1.005
1.015

93°

3 1/2

1/8 REF.

23 1/16

3 3/4

24 1/4

12234 (ON 40223-4 ONLY)

ARM (SEE TABLE)

SWAGE BOTH ENDS TO INCREASE WIDTH DIMENSION AS SHOWN.

SWAGED AS SHOWN ON SECT. A-A THRU THIS AREA (BOTH SIDES)

PART NO.	ARM
40223	40191
40223-4	40191-3

80022-43	2	BUSHINGS	
80012-59	4		
40212-2	2	MAST	
40202-2	1	TUBE	
40191-3	1	ARM (ON 40223-4 ONLY)	
40191	1	ARM (ON 40223 ONLY)	
12234	1	BRACKET (ON 40223-4 ONLY)	
-3	—	SUB-ASS'Y. OF 40202-2 & 2 OF 80022-43	
-2	—	SUB-ASS'Y. OF 40212-2 & 2 OF 80012-59	

NOTES:

1. OVALITY OF 40202-2 SHALL NOT EXCEED .010 (DIFFERENCE BETWEEN MAJOR AND MINOR DIAMETERS.)

LET.	REVISION	DATE	BY
V	REDRAWN WITHOUT CHANGE	6-22-51	L.E.M.
U	1 OF 12234 WAS 2; VIEW OF 12234 REV.	4-29-49	C.K.
T	-4 & 12234 ADDED	2-16-49	R.M.
S	NOTE 1 ADDED	12-1-44	E.L.N.
R	93° ANGLE RELOCATED	5-1-44	V.R.B.
Q	NOTE REVISED	10-26-43	L.R.
P	J5C NEXT ASS'Y 42823 WAS 40673	10-15-43	W.G.T.
O	REDRAWN & REVISED	9-15-43	J.F.C.

THIS DRAWING IS THE PROPERTY OF THE PIPER AIRCRAFT CORP. AND ITS POSSESSION BY UNAUTHORIZED PERSONS SHALL NOT BE CONSTRUED AS PERMISSION TO REPRODUCE FOR SALE, IN WHOLE OR IN PART, ANY DEVICES SHOWN THEREON

MODEL	PER PLANE	NEXT ASSEMBLY	SUPERSEDES	SUP. BY
J-5	1	42823		
J-5	1	42823		

PIPER AIRCRAFT CORP.
LOCK HAVEN, PENNA.

PART NO. | NO. REQ. | NAME / MATERIAL

SCALE FULL SIZE | TOTAL WT.—LBS.

FINISH—PIPER SPECIFICATION #10

MANUFACTURING PRACTICES—PIPER SPECIFICATION #9

TUBE ASSEMBLY-TORQUE

DRAFTSMAN	CHECKER	STANDARDS
CROWLEY 9-13-43	C.K. 9-14-43	

40223

A804

WAS J2-43 / J3-A41

P N

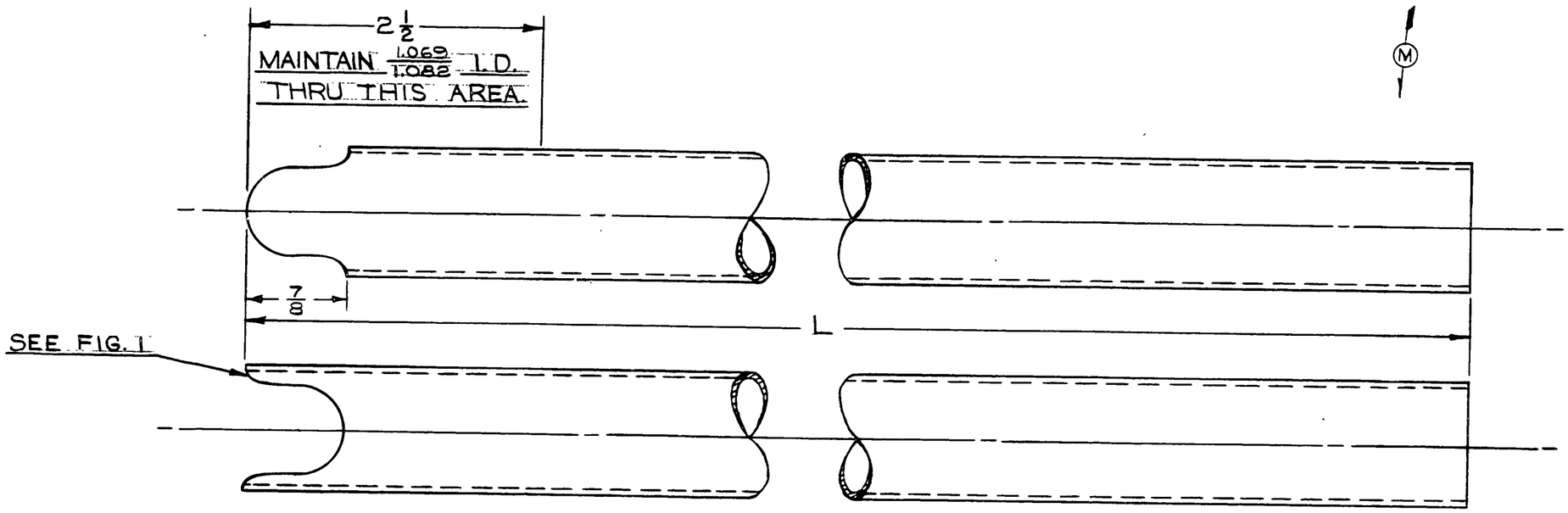

PART No.	L	MODEL	PER PLANE	NEXT ASS'Y.
40231	15 9/16	J3-J5C	2	42812
40231-2	13 9/16			
40231-3	14 1/4			

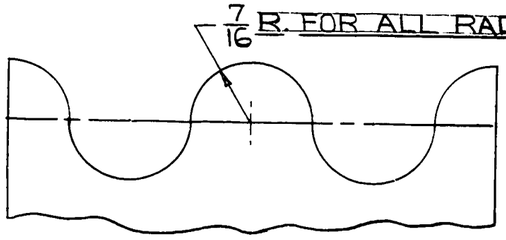

FIG. 1
DEVELOPMENT OF END

LET.	REVISION	DATE	BY
P	.113 HOLE REMOVED	6-1-49	C.K.
O	-3 ADDED	4-22-48	RC
N	(IN-2 ONLY) REMOVED	1-10-47	I.D.B.
M	.113 HOLE ADDED FOR -2	10-15-46	E.L.N.
L	REDRAWN & REVISED	5-21-46	BBC

THIS DRAWING IS THE PROPERTY OF THE PIPER AIRCRAFT CORP. AND ITS POSSESSION BY UNAUTHORIZED PERSONS SHALL NOT BE CONSTRUED AS PERMISSION TO REPRODUCE FOR SALE, IN WHOLE OR IN PART, ANY DEVICES SHOWN THEREON.

MODEL	PER PLANE	NEXT ASSEMBLY	SUPERSEDES	SUP. BY
NOTED	NOTED	NOTED		

PIPER AIRCRAFT CORP.
LOCK HAVEN, PENNA.

PART No.	NO. REQ.	SIZE	DESCRIPTION
			MATERIAL
		1 3/16 x .065 x NOTED	4130 STL. SEAMLESS TUBE
		OR	
		1.14 x .035 x NOTED	4130 STL. SEAMLESS TUBE

SCALE FULL SIZE — TOTAL WT.—LBS.
FINISH—PIPER SPECIFICATION #10
MANUFACTURING PRACTICES—PIPER SPECIFICATION #9

STICK-CONTROL

DRAFTSMAN	CHECKER	STANDARDS
BBC 5-21-46	E.E.T. 5-24-46	

40231

633

A633

WAS A 4083
D 4317-B

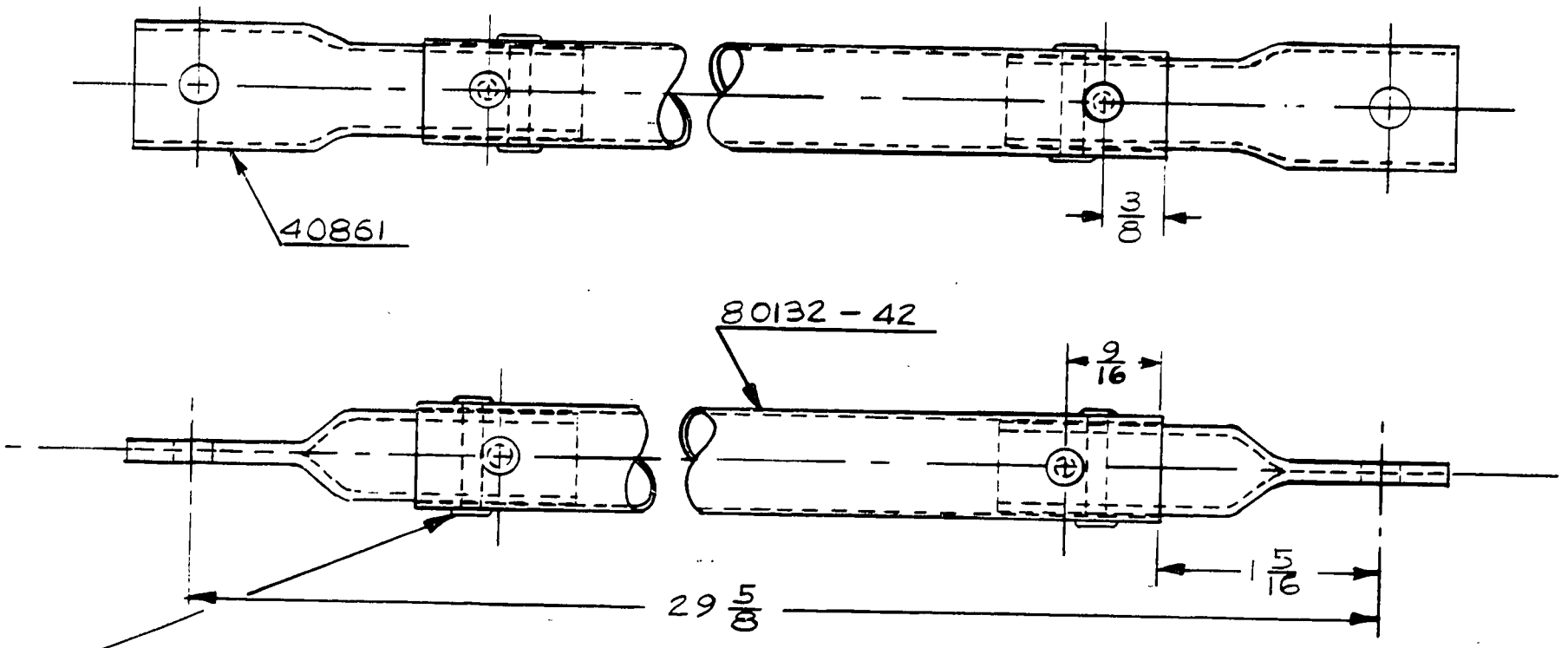

	4	1/8 x 3/4	FL. HD. OR RD. HD. SOFT ST'L. RIVET
80132-42	1	TUBE	
40861	2	END ASSEMBLY	
PART NO.	NO. REQ.	SIZE	DESCRIPTION MATERIAL

SCALE FULL SIZE | TOTAL WT.—LBS.

FINISH—PIPER SPECIFICATION # 10

MANUFACTURING PRACTICES—PIPER SPECIFICATION # 9

MODEL	PER PLANE	NEXT ASSEMBLY	SUPERSEDES	SUP. BY
J5C	1	42823		
J4-J3	1	42823		

LET	REVISION	DATE	BY
G	REDRAWN WITHOUT CHNG.	6-20-51	C.B.
F	J5C NEXT ASSY. 42823 WAS 40673	10-15-43	WGT
E	J3 NEXT ASSY. 42823 WAS 40673	8-26-43	I.D.B.
D	REDRAWN & REVISED	8-11-43	R.R.F.

THIS DRAWING IS THE PROPERTY OF THE PIPER AIRCRAFT CORP. AND ITS POSSESSION BY UNAUTHORIZED PERSONS SHALL NOT BE CONSTRUED AS PERMISSION TO REPRODUCE FOR SALE IN WHOLE OR IN PART ANY DEVICES SHOWN THEREON.

PIPER AIRCRAFT CORP.
LOCK HAVEN, PENNA.

TUBE ASSEMBLY—TORQUE TUBE CONNECTOR

DRAFTSMAN	CHECKER	STANDARDS
R. FRANK 8-11-43	C.K. 8-16-43	

40261

277

A 277

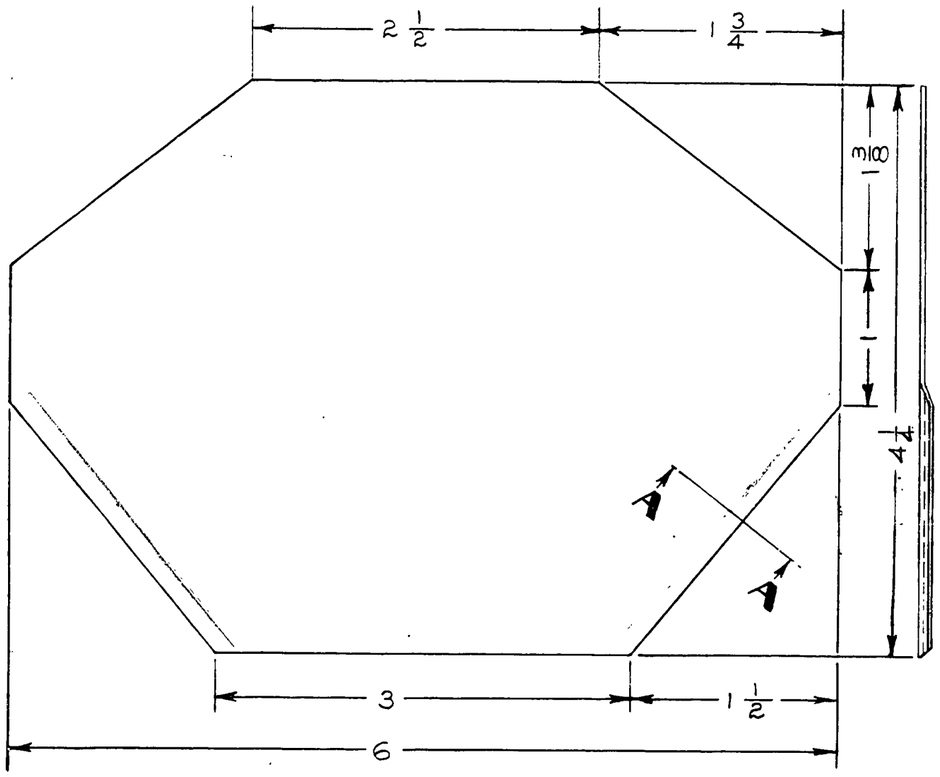

-2 DETAIL

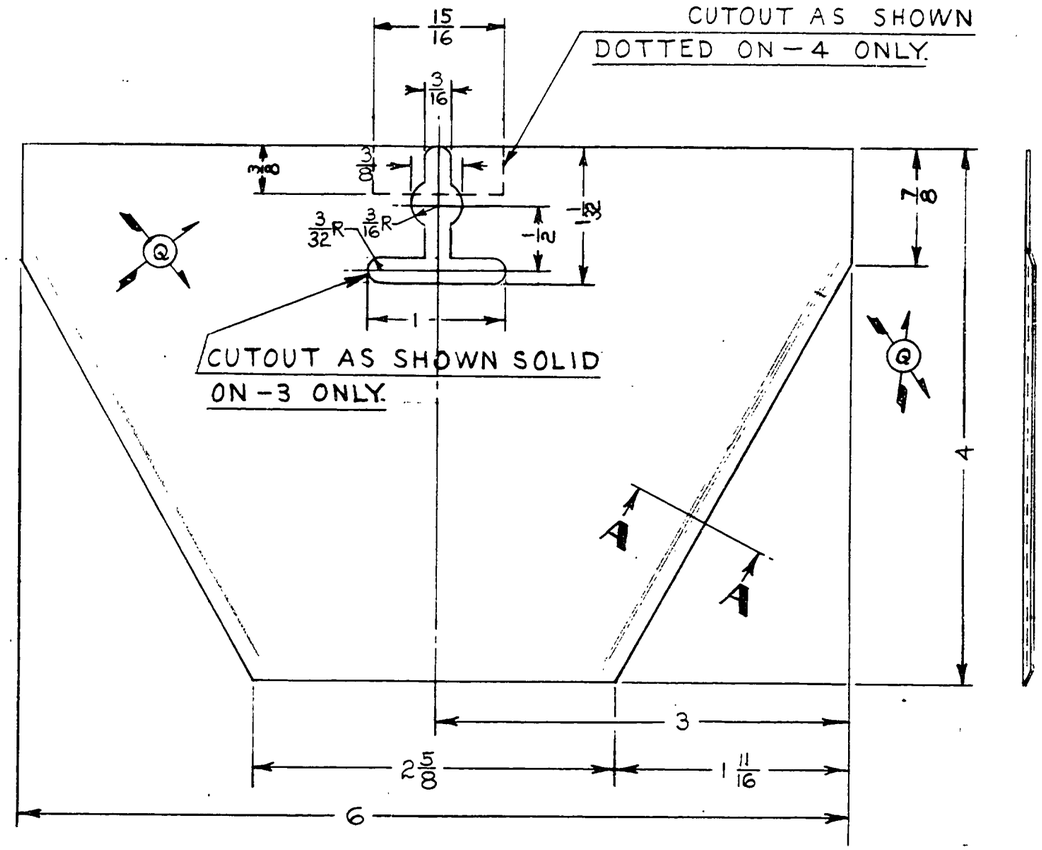

-3 & -4 DETAIL

PART NO.	REMARKS
40311-2	SHOWN
40311-3	SHOWN
40311-4	WITH CUTOUT AS SHOWN DOTTED

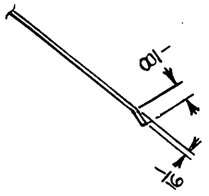

SECTION A-A

PART NO.	No. REQ.	SIZE	DESCRIPTION
-4		.020×4×6	3S-½ H ALUM.
-3			
-2		.020×4¼×6	3S-½ H ALUM.

MATERIAL

SCALE FULL SIZE — TOTAL WT.-LBS.

FINISH—PIPER SPECIFICATION #10

MANUFACTURING PRACTICES—PIPER SPECIFICATION #9

LET.	REVISION	DATE	BY
Q	4: WAS 4 1/8; 7/8 WAS 1; 3/8 WAS 1/2; 1/8 REM.; NOTE ADDED	2-14-50	C.K.
P	-4 & TABLE ADDED	6-24-49	C.K.
O	REDRAWN + REVISED	4-1-48	R.M.

MODEL | PER PLANE | NEXT ASSEMBLY | SUPERSEDES | SUP. BY

THIS DRAWING IS THE PROPERTY OF THE PIPER AIRCRAFT CORP. AND ITS POSSESSION BY UNAUTHORIZED PERSONS SHALL NOT BE CONSTRUED AS PERMISSION TO REPRODUCE FOR SALE, IN WHOLE OR IN PART, ANY DEVICES SHOWN THEREON.

PIPER AIRCRAFT CORP.
LOCK HAVEN, PENNA.

PLATE — AILERON HINGE REINFORCING

DRAFTSMAN	CHECKER	STANDARDS
R.T.M. 4-1-48	H.R.K. 4-23-48	

40311

A634

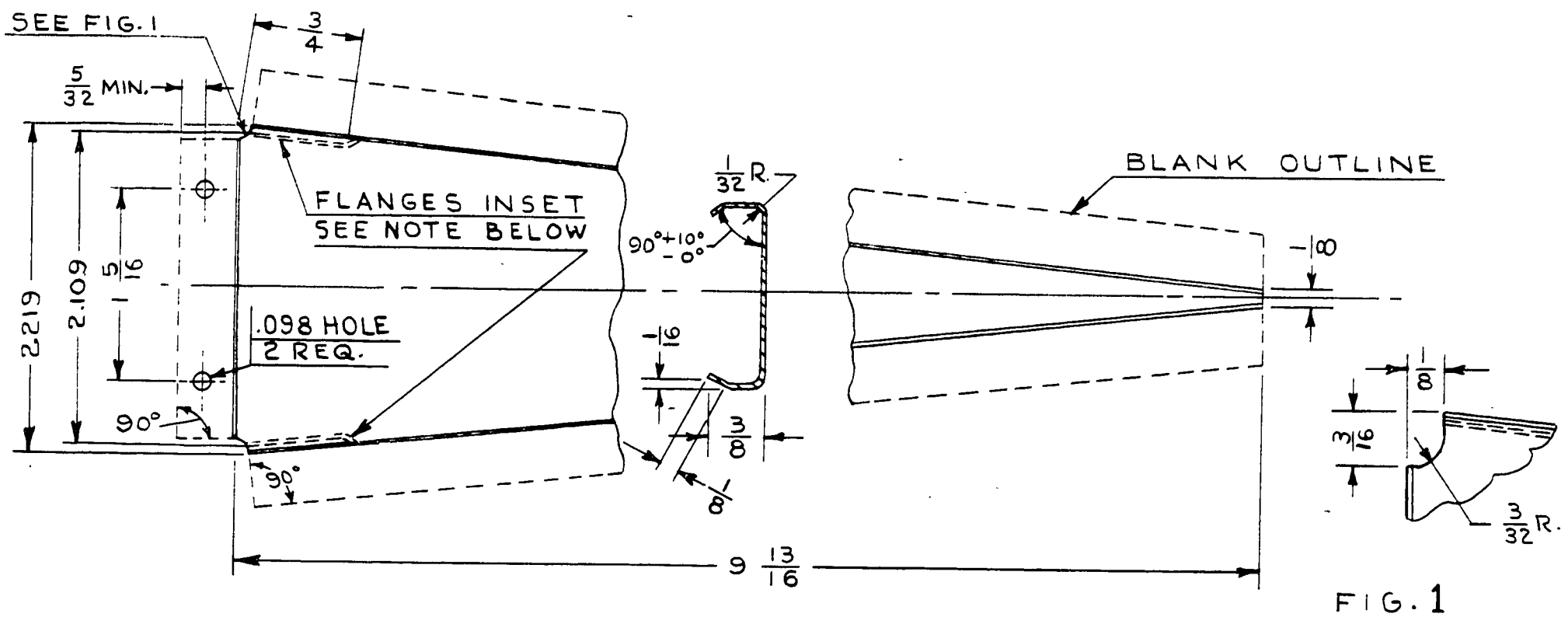

FIG. 1
TWICE SIZE

40321-2 SHOWN SOLID LINES
40321-3 SHOWN WITH FLANGES DOTTED

PART NO.	NO. REQ.	SIZE	MATERIAL / DESCRIPTION
		.020 × 2 29/32 × 10 1/4	24 S-T. ALUM.

SCALE FULL SIZE & NOTED | TOTAL WT.—LBS.
FINISH—PIPER SPECIFICATION # 10
MANUFACTURING PRACTICES—PIPER SPECIFICATION # 9

MODEL	PER PLANE	NEXT ASSEMBLY	SUPERSEDES	SUP. BY

THIS DRAWING IS THE PROPERTY OF THE PIPER AIRCRAFT CORP. AND ITS POSSESSION BY UNAUTHORIZED PERSONS SHALL NOT BE CONSTRUED AS PERMISSION TO REPRODUCE FOR SALE IN WHOLE OR IN PART ANY DEVICES SHOWN THEREON.

LET	REVISION	DATE	BY
M	REDRAWN & REVISED	6-13-51	I.M.M.

PIPER AIRCRAFT CORP.
LOCK HAVEN, PENNA.

RIB — AILERON

DRAFTSMAN	CHECKER	STANDARDS	
I. M. M. 6-13-51	H. R. K. 6-20-51		40321

278

A278

WAS 440
D441-A

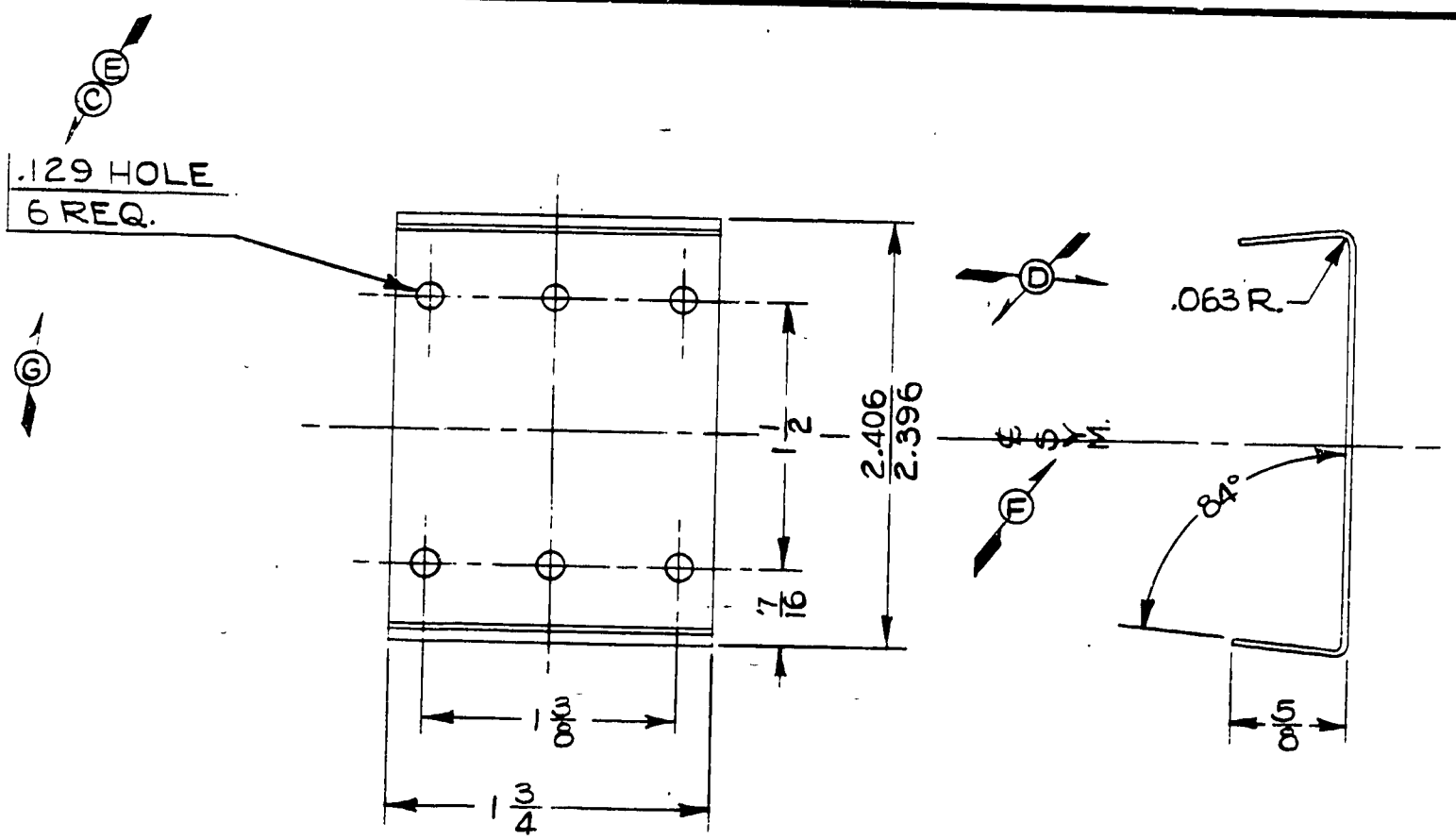

LET	REVISION	DATE	BY
L	REDRAWN WITHOUT CHANGE	6-13-51	L.E.M.
K	L-14 N.A. 41881 ADDED	6-14-45	L.M.M.
J	L-14 PER SHIP 8 WAS 6	6-14-45	L.M.M.
H	L-14 MODEL REF. ADDED	3-3-45	L.M.M.
G	2 .129 HOLES ADDED	12-12-44	H.M.Z.
F	℄ SYM. ADDED	10-11-43	C.J.Hill
E	.129 HOLE WAS .098 HOLE	10-11-43	C.J.Hill
D	2.406/2.396 WAS 2 13/32; .063 R. WAS 1/32 R	4-17-43	J.E.C.
C	.098 WAS .128	4-1-43	I.D.B.
B	MODEL, PER SHIP, NEXT ASSY. REV.	3-16-43	C.K.
A	6 PER SHIP WAS 2	9-25-42	C.E.K.

MODEL	PER PLANE	NEXT ASSEMBLY	SUPERSEDES	SUP. BY
L-14	E	41881, 40136		
		40056, 40996		
	B	41881, 42441		
	4	41881		
	B	40361, 40381		
	4	40381		

THIS DRAWING IS THE PROPERTY OF THE PIPER AIRCRAFT CORP. AND ITS POSSESSION BY UNAUTHORIZED PERSONS SHALL NOT BE CONSTRUED AS PERMISSION TO REPRODUCE FOR SALE IN WHOLE OR IN PART ANY DEVICES SHOWN THEREON.

PIPER AIRCRAFT CORP.
LOCK HAVEN, PENNA.

PART NO.	NO. REQ.	SIZE	DESCRIPTION / MATERIAL
		.032 x 1 3/4 x 3 9/16	#1025 STEEL

SCALE FULL SIZE | TOTAL WT.—LBS.
FINISH—PIPER SPECIFICATION # 10
MANUFACTURING PRACTICES—PIPER SPECIFICATION # 9

PLATE—AILERON HINGE

DRAFTSMAN	CHECKER	STANDARDS
W.N. EMERY 9-4-41	R.C.M. 10-6-41	

40331

279

A279

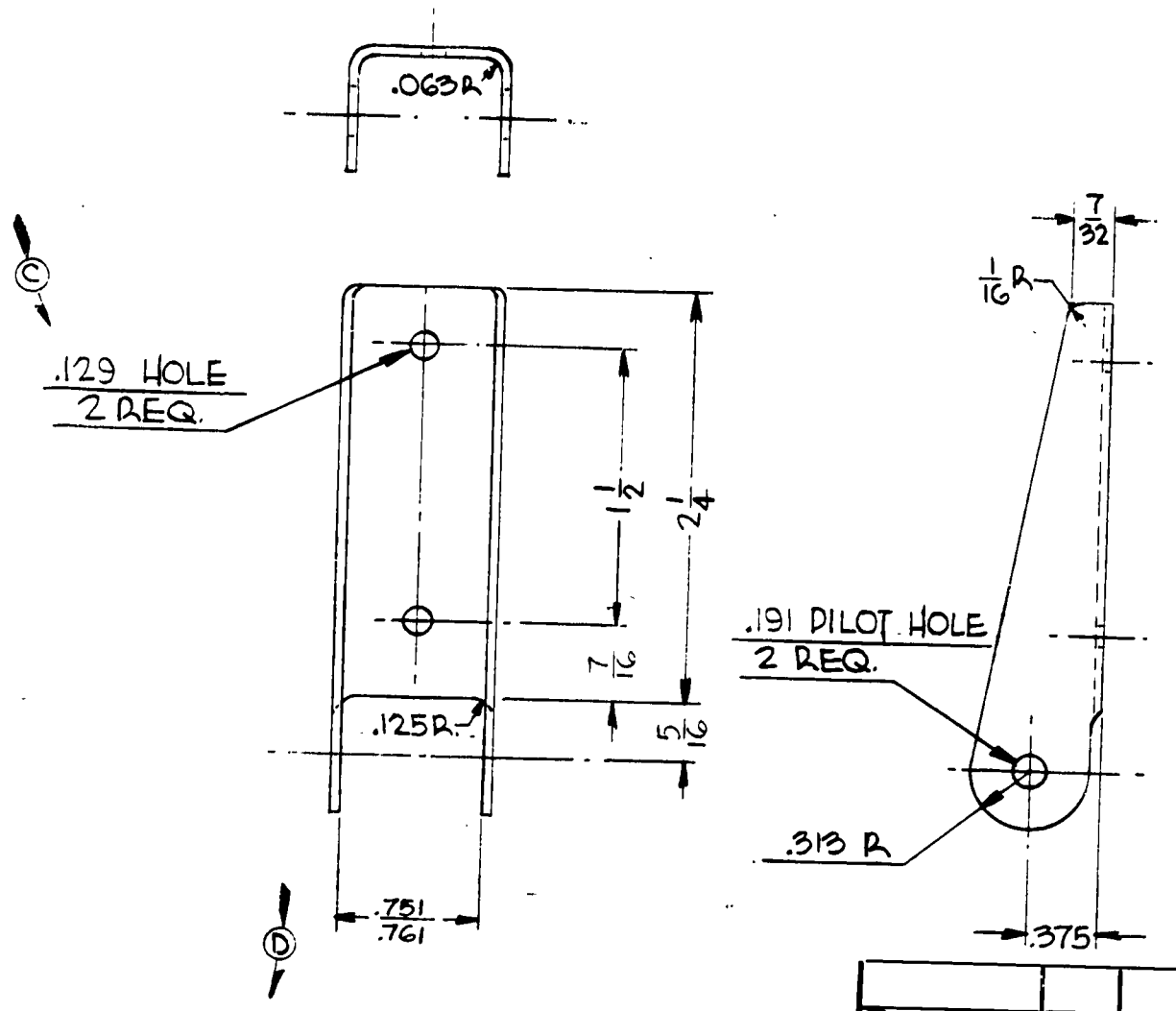

PART NO.	NO. REQ.	SIZE	DESCRIPTION
		.045×2×2 7/8	#1025 STEEL

MATERIAL

SCALE FULL SIZE | TOTAL WT.—LBS.

FINISH—PIPER SPECIFICATION # 10

MANUFACTURING PRACTICES—PIPER SPECIFICATION # 9

MODEL	PER PLANE	NEXT ASSEMBLY	SUPERSEDES	SUP. BY
L-14	2	41881		
TG-8HE-1	4	40381		
J3	4	41881		
L4A,L4B	4	41881		
J5C,J5D	4	41881		

LET	REVISION	DATE	BY
E	REDRAWN WITHOUT CHANGE	6-13-51	M.G.
D	L-14 MODEL REF ADDED	3-2-45	E.L.N.
C	.129 HOLE WAS .089 PILOT HOLE	12-12-44	H.M.Z.
B	REDRAWN & REVISED	4-2-43	R.E.T.

THIS DRAWING IS THE PROPERTY OF THE PIPER AIRCRAFT CORP. AND ITS POSSESSION BY UNAUTHORIZED PERSONS SHALL NOT BE CONSTRUED AS PERMISSION TO REPRODUCE FOR SALE IN WHOLE OR IN PART ANY DEVICES SHOWN THEREON.

PIPER AIRCRAFT CORP.
LOCK HAVEN, PENNA.

HINGE—AILERON

DRAFTSMAN	CHECKER	STANDARDS
R.E.T. 4-2-43	L.E.K. 4-2-43	

40371

280

A 280

WAS 1105-B

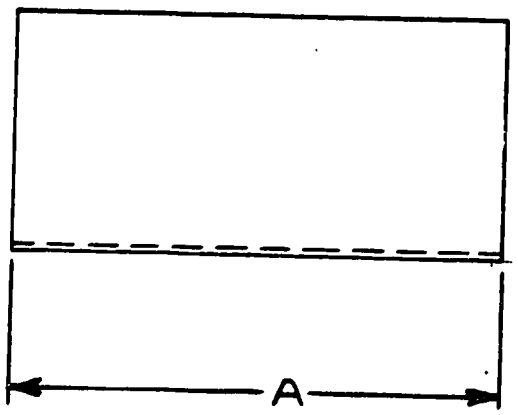

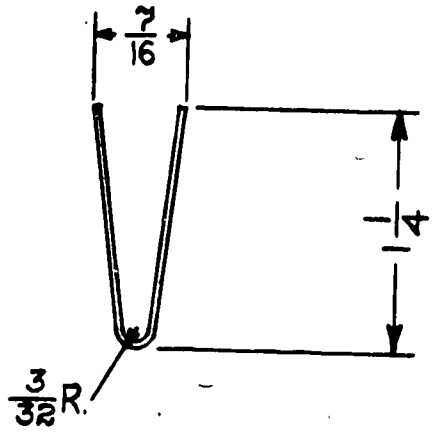

PART NO.	A
40411	2 1/2
40411-2	1 1/4

PART No.	No. REQ.	SIZE	DESCRIPTION
		.020×2½×NOTED	3S-½ H ALUM.
		MATERIAL	

SCALE FULL SIZE — TOTAL WT.—LBS.

FINISH—PIPER SPECIFICATION #10

MANUFACTURING PRACTICES—PIPER SPECIFICATION #9

MODEL	PER PLANE	NEXT ASSEMBLY	SUPERSEDES	SUP. BY
J-14	2	90049 90049		
J-15	2	42585		
J-50	2	42585		

LET.	REVISION	DATE	BY
F	-2 ADDED	12-21-48	R.M.
E	REDRAWN & REVISED	6-14-45	H.K.

PENCILTEX A. B. SMITH CO., PEN., PA.

PIPER AIRCRAFT CORP.
LOCK HAVEN, PENNA.

H.R.K.	I.D.B.	
6-14-45	6-14-45	
DRAFTSMAN	CHECKER	STANDARDS

REINFORCEMENT — AILERON TRAILING EDGE

40411

281

A281

WAS 4195 D4202-A , 4194 D4203-A

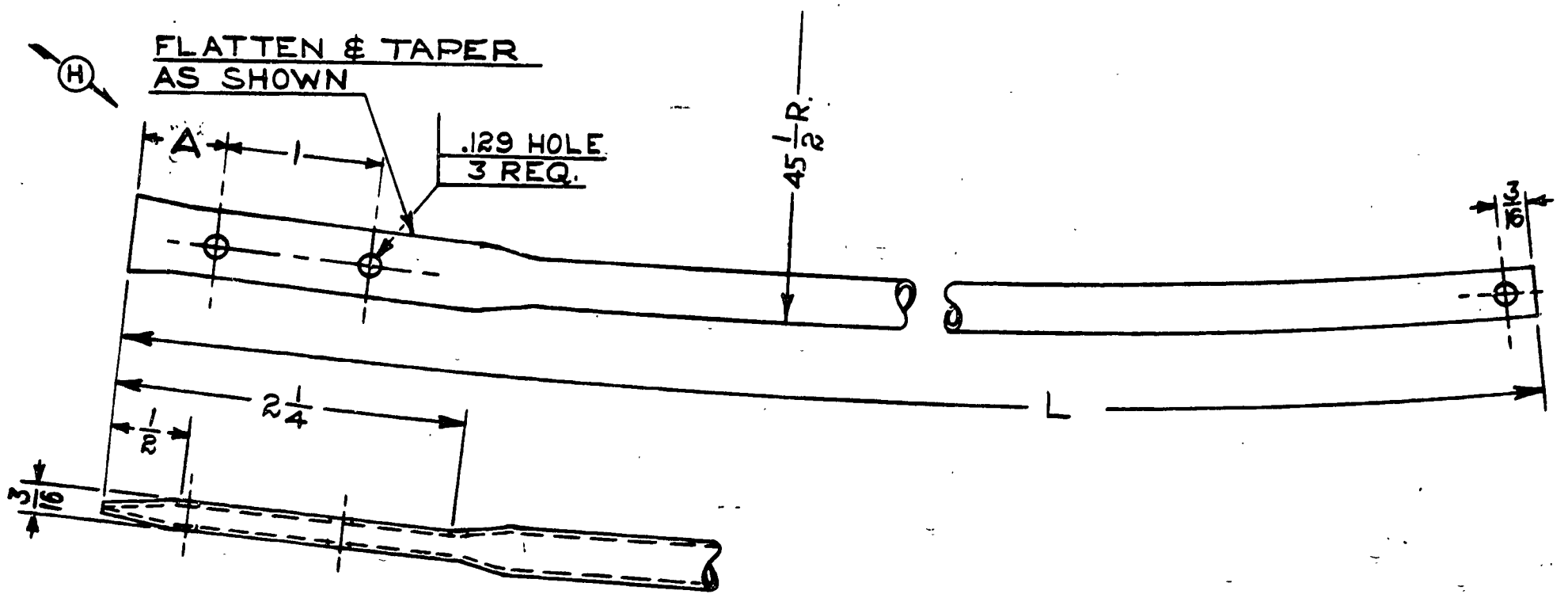

PART NO.	L	A
40421-2	17 3/8	17/32
(H) 40421-3	15 1/8	13/32

LET.	REVISION	DATE	BY
H	TABLE REVISED WAS 15 1/8 NOW 17 3/8	10-31-50	K.D.
G	REDRAWN & REVISED	6-14-45	H.K.

PENCILTEX A. B. D. SMITH CO., PGH., PA.

NOTED

MODEL	PER PLANE	NEXT ASSEMBLY	SUPERSEDES	SUP. BY

PIPER AIRCRAFT CORP.
LOCK HAVEN, PENNA.

PART No.	No. REQ.	SIZE	DESCRIPTION
		5/16 x .028 x NOTED	#1025 STL. TUBE
		MATERIAL	

SCALE FULL SIZE — TOTAL WT.—LBS.

FINISH—PIPER SPECIFICATION #10

MANUFACTURING PRACTICES—PIPER SPECIFICATION #9

TUBE - AILERON TIP

DRAFTSMAN	CHECKER	STANDARDS
H.R.K. 6-14-45	L.D.B. 6-14-45	

40421

282

A282

WAS 435
D434-A

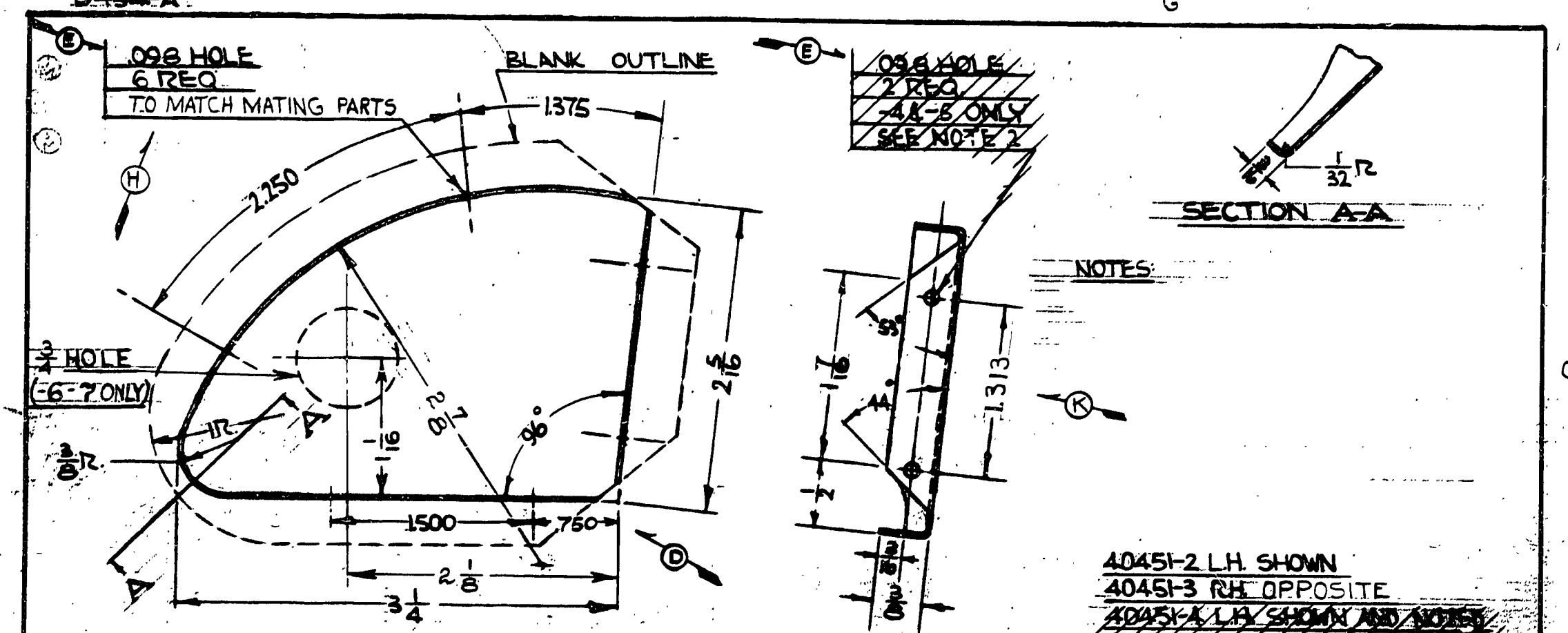

PART NO.	MODEL	No. REQ.	NEXT ASSY.
40451-2	[illegible]	[illegible]	[illegible]
40451-3	[illegible]	[illegible]	[illegible]
40451-4	[illegible]	[illegible]	[illegible]
40451-5	[illegible]	[illegible]	[illegible]
40451-6	[illegible]	[illegible]	[illegible]
40451-7	[illegible]	[illegible]	[illegible]

F
G LIMITS, SHOP PRACTICES AND FINISH. UNLESS OTHERWISE NOTED, TO BE IN ACCORDANCE WITH PIPER SPECIFICATIONS #9 AND #10.

LET.	REVISION	DATE	BY
L	-6 & -7 ADDED	8-1-46	R.M.
K	TOLERANCE NOTE REM., .1313 WAS 1/8	5-12-47	E.L.N.
J	20 PER PLANE WAS 12 FOR -2 & -3	7-30-46	E.L.N.
H	2-.098 HOLES ADDED FOR -2 & -3	7-30-46	E.L.N.
G	-4 & -5 CAN, NOTES 1 & 2 REM.	7-30-46	E.L.N.
F	L-14 MODEL REF. ADDED	3-3-45	I.M.
E	.098 WAS .094	1-31-44	I.B.B.
D	.750 WAS 3.625	1-21-44	C.E.K.
C	REDRAWN & REVISED	12-31-43	L.R.

MODEL	PER SHIP	NEXT ASSEMBLY	SUPERSEDES	SUP. BY

PIPER AIRCRAFT CORP.
LOCK HAVEN, PENNA.

PART No.	No. REQ.	SIZE	MATERIAL DESCRIPTION
		.020 × 3 3/16 × 4 1/8	3S-1/2H ALUM

SCALE FULL SIZE | TOTAL WT.-LBS.
FINISH

BULKHEAD — AILERON

40451

283

A 283

WAS 4337 / D4346-A

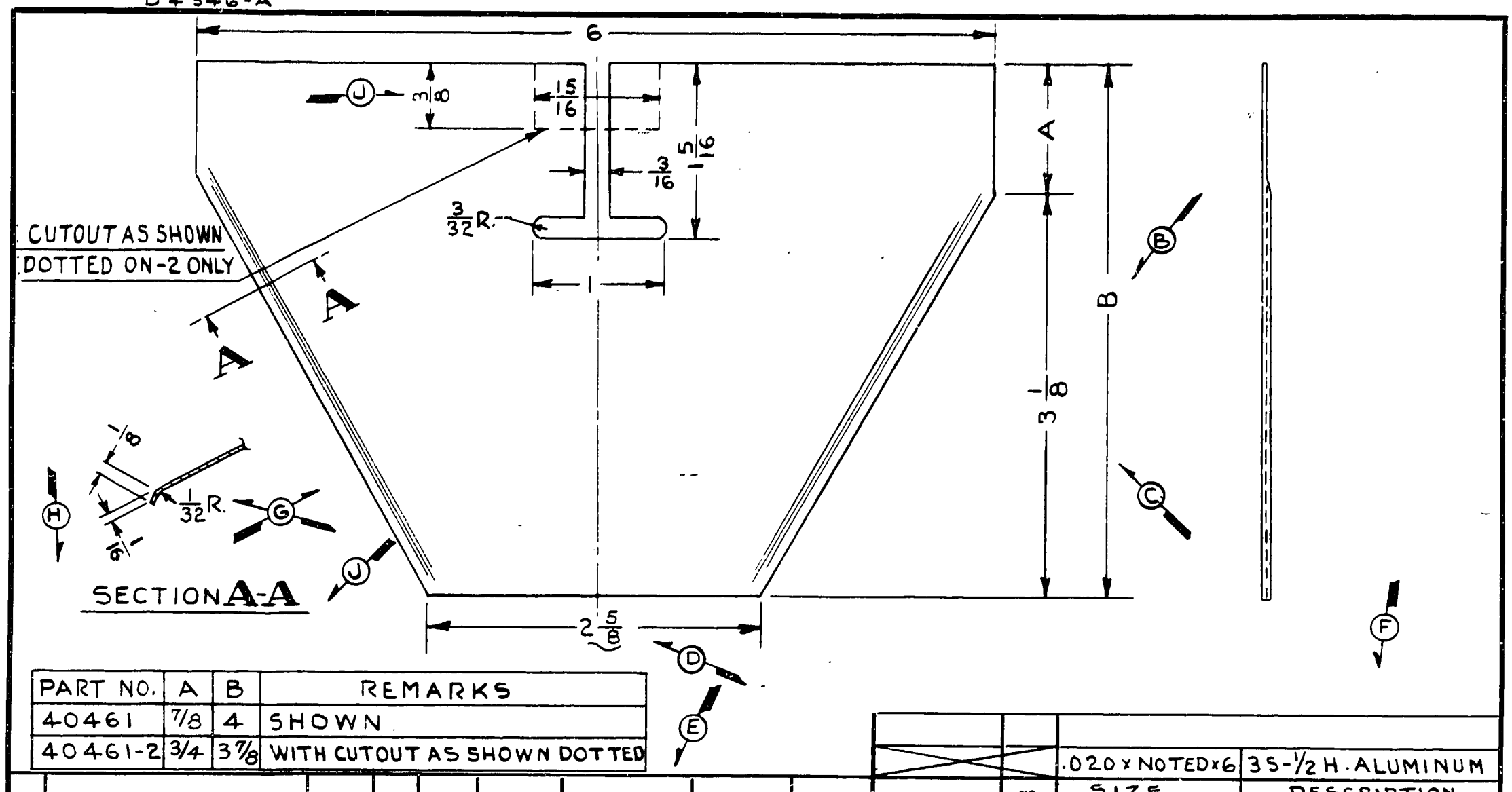

PART NO.	A	B	REMARKS
40461	7/8	4	SHOWN
40461-2	3/4	3 7/8	WITH CUTOUT AS SHOWN DOTTED

LET	REVISION	DATE	BY
K	REDRAWN WITHOUT CHANGE	6-13-51	I.M.M.
J	3/8 WAS 1/2, 3/4 WAS 7/8, & 3 7/8 WAS 4 IN-2	2-28-51	M.G.
H	-2 & TABLE ADDED	6-24-49	C.K.
G	FABRIC BRAKE; SEC "A-A" ADDED	10-11-43	C.E.K.
F	35-1/2H. ALUM. WAS 25H. ALUM.	4-29-43	R.E.T.
E	NEXT ASSY 42585 WAS 40514	1-25-43	R.E.S.
D	2 5/8" WAS 2 1/2"	4-8-42	C.E.K.
C	3 1/8" WAS 3 1/4"	4-8-42	C.E.K.
B	4" WAS 4 1/8"	3-20-42	C.F.S.
A	CUTOUT REVISED	12-24-41	C.L.W.

MODEL	PER PLANE	NEXT ASSEMBLY	SUPERSEDES	SUP. BY
TG8	2	40514		
L-4B	2	42585		
L-4A	2	42585		
J3	2	42585		

THIS DRAWING IS THE PROPERTY OF THE PIPER AIRCRAFT CORP. AND ITS POSSESSION BY UNAUTHORIZED PERSONS SHALL NOT BE CONSTRUED AS PERMISSION TO REPRODUCE FOR SALE IN WHOLE OR IN PART ANY DEVICES SHOWN THEREON.

PIPER AIRCRAFT CORP.
LOCK HAVEN, PENNA.

PART NO.	NO. REQ.	SIZE	DESCRIPTION
		.020 x NOTED x 6	35-1/2 H. ALUMINUM
		MATERIAL	

SCALE FULL SIZE | TOTAL WT.—LBS.
FINISH—PIPER SPECIFICATION # 10
MANUFACTURING PRACTICES—PIPER SPECIFICATION # 9

PLATE — AILERON HORN HINGE LOWER REINFORCING

W.N. EMERY	R.C.M.		40461
9-15-41	10-6-41		
DRAFTSMAN	CHECKER	STANDARDS	

284

A284

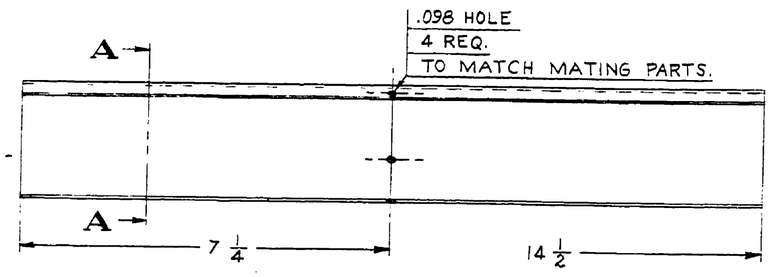

40471-2

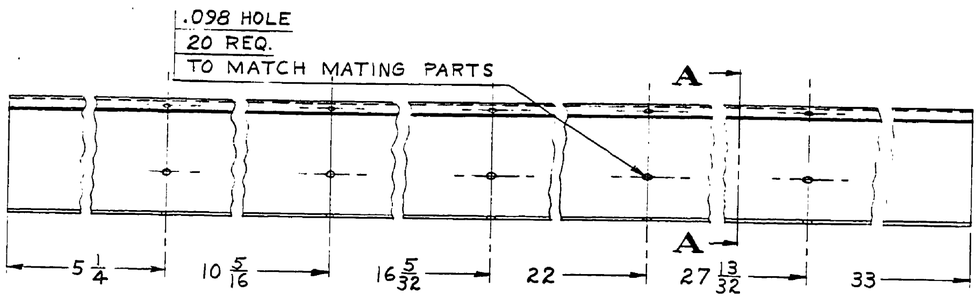

40471-6 L.H. SHOWN
40471-3 R.H. OPPOSITE

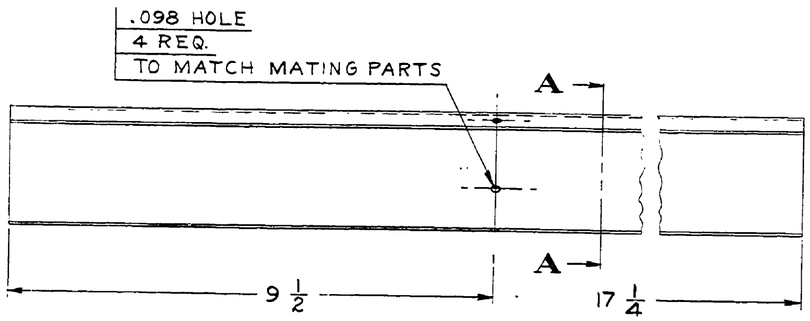

40471-8 L.H. SHOWN
40471-5 R.H. OPPOSITE

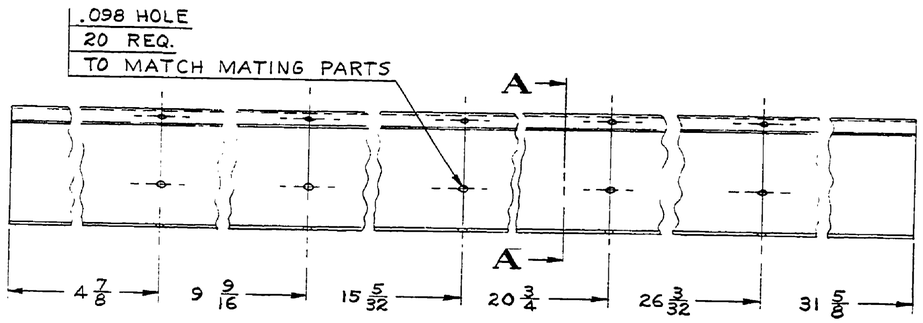

40471-4 L.H. SHOWN
40471-7 R.H. OPPOSITE

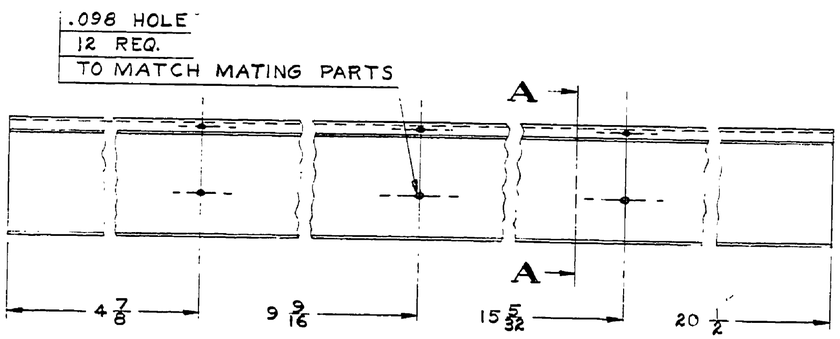

40471-10 L.H. SHOWN
40471-9 R.H. OPPOSITE

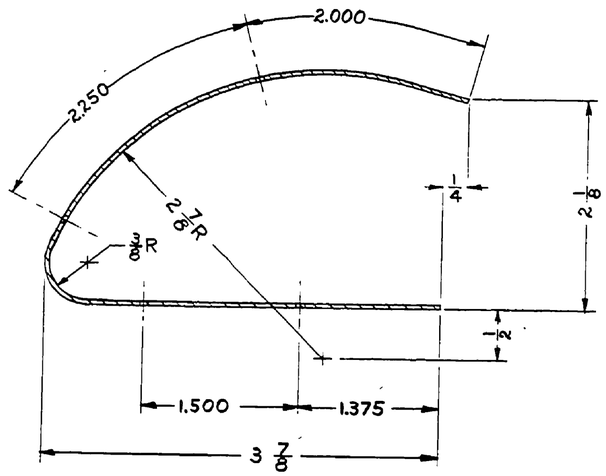

SECTION A-A
FULL SIZE

THIS DRAWING IS THE PROPERTY OF THE PIPER AIRCRAFT CORP. AND ITS POSSESSION BY UNAUTHORIZED PERSONS SHALL NOT BE CONSTRUED AS PERMISSION TO REPRODUCE FOR SALE, IN WHOLE OR IN PART. ANY DEVICES SHOWN THEREON

LET.	REVISION	DATE	BY
6	REDRAWN & REVISED	6-27-49	C.K

MODEL	PER PLANE	NEXT ASSEMBLY	SUPERSEDES	SUP. BY

PART NO.	NO. REQ.	SIZE	DESCRIPTION / MATERIAL
		.016 · 9⅛ · NOTED	3S-½ H. ALUM.

SCALE 6 IN. = 1 FT. & NOTED | TOTAL WT.—LBS.
FINISH—PIPER SPECIFICATION #10
MANUFACTURING PRACTICES—PIPER SPECIFICATION #9

COVER—AILERON
LEADING EDGE

PIPER AIRCRAFT CORP.
LOCK HAVEN, PENNA.

DRAFTSMAN	CHECKER	STANDARDS	
C. E. K. 6-27-49	H. R. K. 6-27-49		40471

A805

WAS 4311
D4321-A

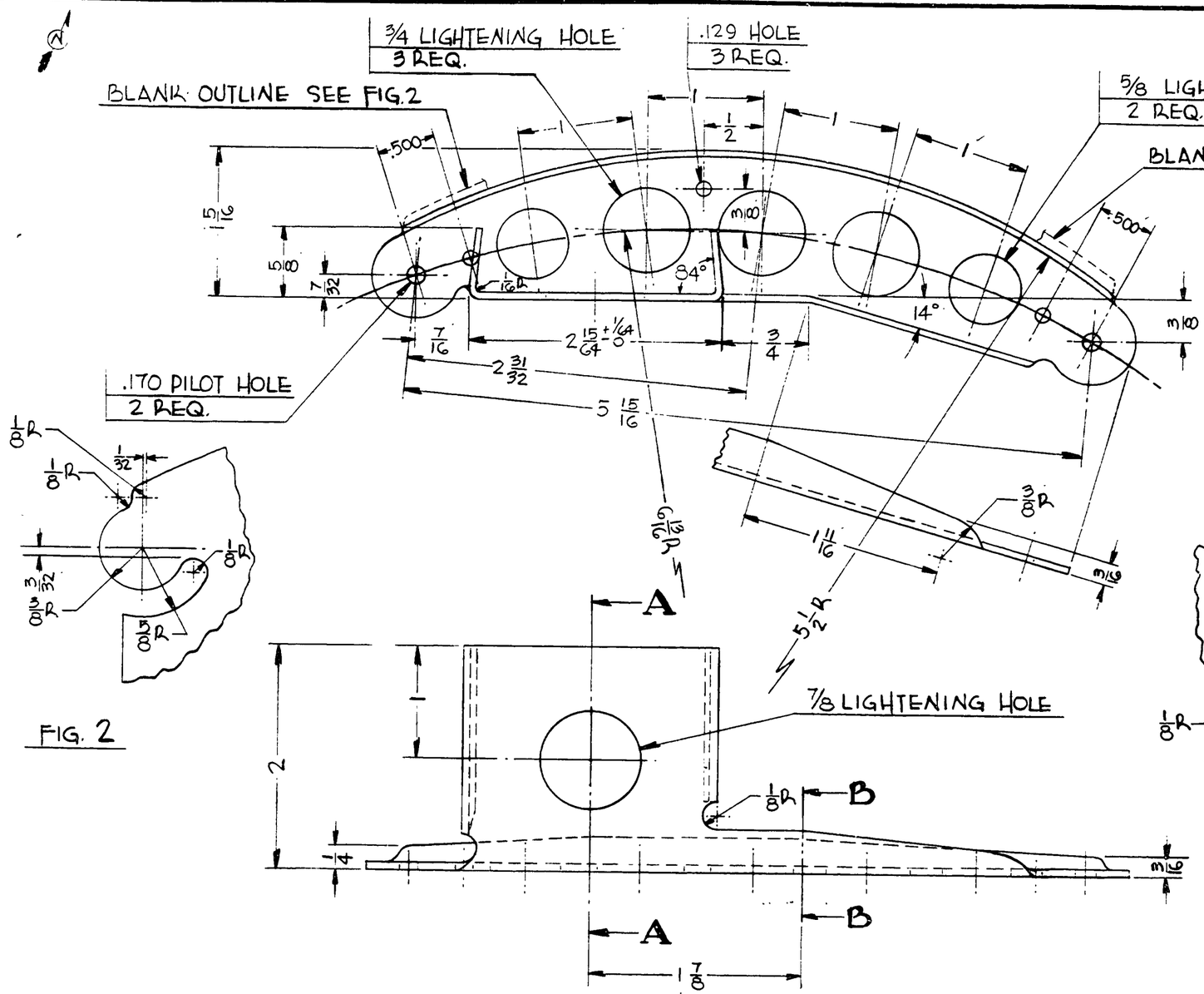

FIG. 2

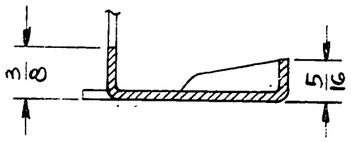

SECTION **B-B**

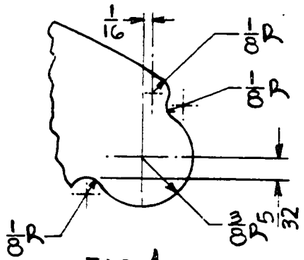

FIG 1

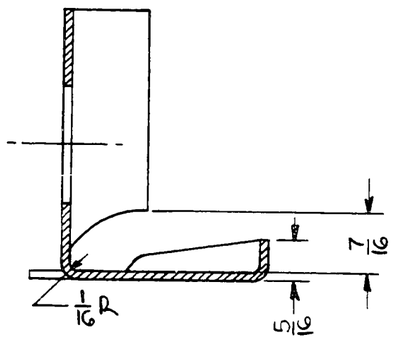

SECTION **A-A**

40482-2 L.H. SHOWN
40482-3 R.H. FORMED OPPOSITE

LET	REVISION	DATE	BY
O	RE-DRAWN WITHOUT CHANGE	6-18-51	M.G.
N	D4321-A WAS D432-A	10-4-43	W.G.T.
M	REDRAWN & REVISED	7-17-43	R.R.F.

MODEL	PER PLANE	NEXT ASSEMBLY	SUPERSEDES	SUP. BY
TG-8	2 EA.	40501		
L-4B	2 EA.	40501		
L-4A	2 EA.	40501		
J-3	2 EA.	40501		

THIS DRAWING IS THE PROPERTY OF THE PIPER AIRCRAFT CORP. AND ITS POSSESSION BY UNAUTHORIZED PERSONS SHALL NOT BE CONSTRUED AS PERMISSION TO REPRODUCE FOR SALE IN WHOLE OR IN PART ANY DEVICES SHOWN THEREON.

PIPER AIRCRAFT CORP.
LOCK HAVEN, PENNA.

PART NO.	NO. REQ.	MATERIAL SIZE	MATERIAL DESCRIPTION
		.062 x 3 7/16 x 6 1/16	#1025 STEEL

SCALE FULL SIZE — TOTAL WT.—LBS.
FINISH—PIPER SPECIFICATION # 10
MANUFACTURING PRACTICES—PIPER SPECIFICATION # 9

HORN—AILERON

DRAFTSMAN	CHECKER	STANDARDS
R. FRANK 7-17-43	L.E.K. 7-21-43	

40482

635

A635

WAS A4088 / D4320-B

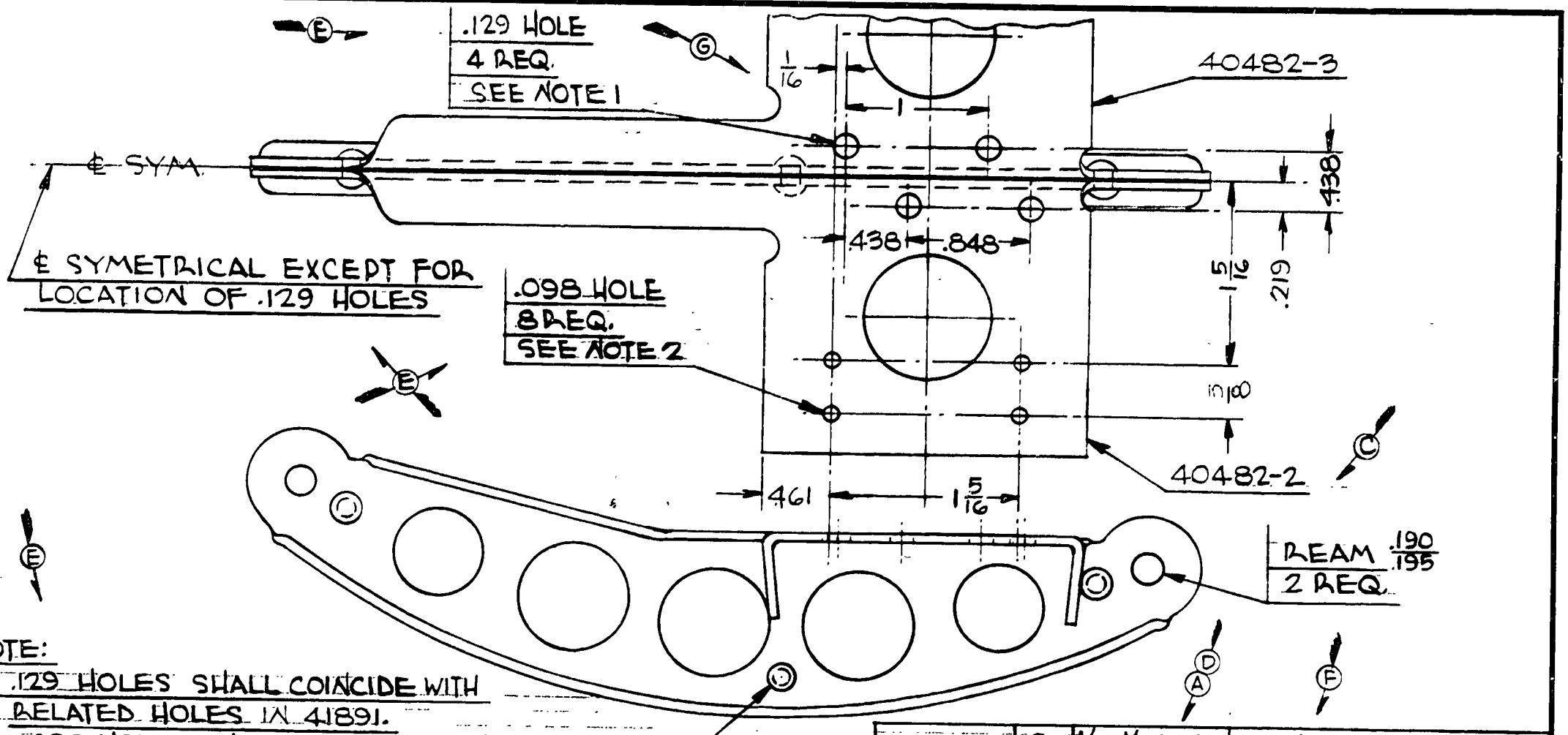

NOTE:

1. .129 HOLES SHALL COINCIDE WITH RELATED HOLES IN 41891.
2. .098 HOLES SHALL COINCIDE WITH RELATED HOLES IN 42972.

LET	REVISION	DATE	BY
H	REDRAWN WITHOUT CHANGE	6-14-51	M.G.
G	.129 HOLES RELOCATED & DIM. ADD	6-20-49	R.R.
F	R.D.HD.SO.ST. WAS BR. HD. IRON	3-30-44	V.C.D.
E	.129 & .098 HOLES & NOTES ADDED	10-27-43	R.E.S.
D	RIVIT SPEC. REV.	9-7-43	L.R.
C	HOLE SPEC. ADDED	4-27-43	C.E.H.
B	NEXT ASSY 42585 WAS 40514	1-25-43	C.E.S.
A	3/16" LONG" ADDED	5-5-42	H.N.

MODEL	PER PLANE	NEXT ASSEMBLY	SUPERSEDES	SUP. BY
J-3	2	40514		
L-4B	2	42585		
L-4A	2	42585		
J-3	2	42585		

THIS DRAWING IS THE PROPERTY OF THE PIPER AIRCRAFT CORP. AND ITS POSSESSION BY UNAUTHORIZED PERSONS SHALL NOT BE CONSTRUED AS PERMISSION TO REPRODUCE FOR SALE IN WHOLE OR IN PART ANY DEVICES SHOWN THEREON.

PIPER AIRCRAFT CORP.
LOCK HAVEN, PENNA.

PART NO.	NO. REQ.	SIZE	DESCRIPTION / MATERIAL
	3	1/8 x 1/4 LONG	R.D. HD. SO. ST RIVETS
40482-3	1		HORN
40482-2	1		

SCALE FULL SIZE | TOTAL WT.—LBS.

FINISH—PIPER SPECIFICATION # 10

MANUFACTURING PRACTICES—PIPER SPECIFICATION # 9

HORN ASSEMBLY—AILERON

DRAFTSMAN	CHECKER	STANDARDS	
V.N. EMERY 9-18-41	R.C.M. 10-6-41		40501

285

A285

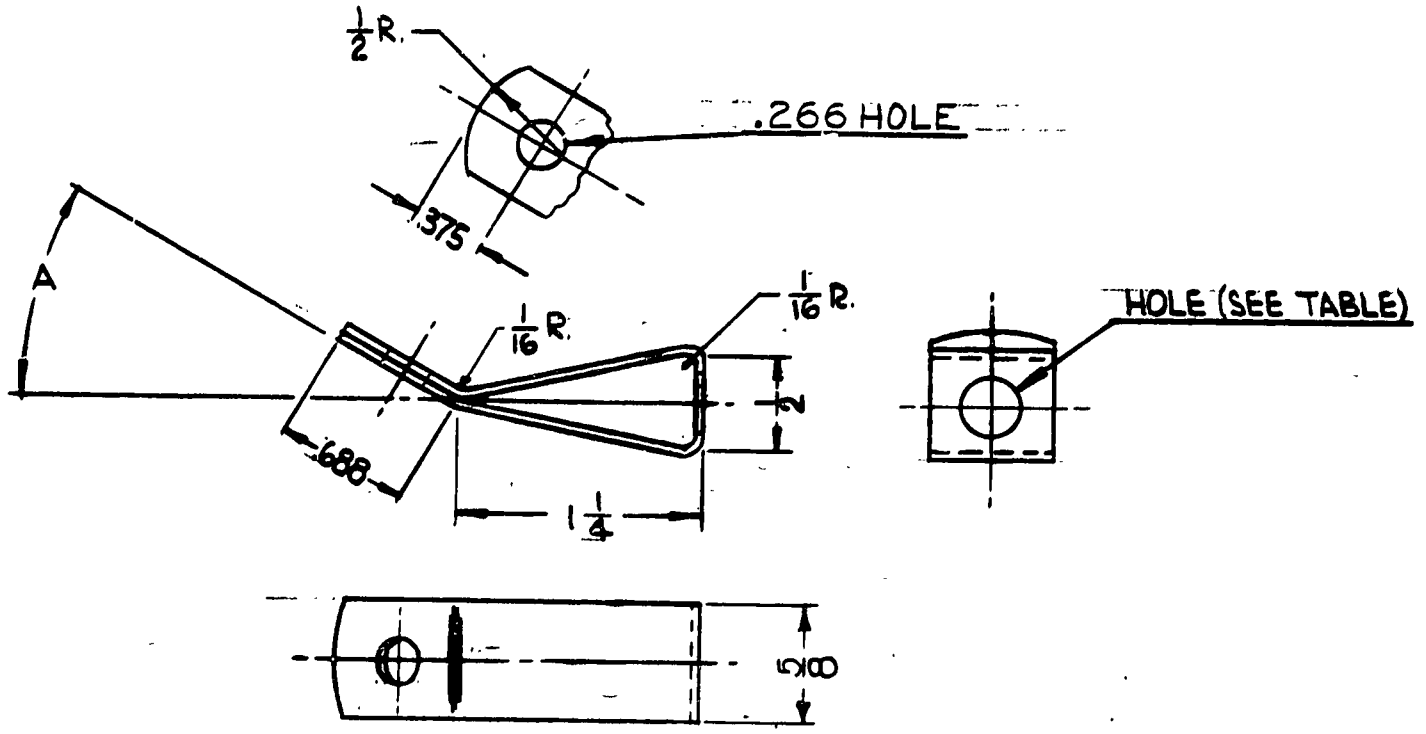

PART NO.	A	HOLE	MAT'L.
40521-2	30°	REAM .327/.337	.045" 1025 STL.
40521-3	58°	9/32	.045" 1025 STL.
40521-4	30°	9/32	.045" 1025 STL.
40521-5	58°	REAM .327/.337	.045" 1025 STL.
40521-6	19°	REAM .327/.337	.045" 1025 STL.

PART NO.	A	HOLE	MAT'L.
40521-7	30°	REAM .327/.337	.062 "1025 STL.
40521-8	58°	REAM .327/.337	.062 "1025 STL.
40521-9	19°	REAM .327/.337	.062" 1025 STL.

LET.	REVISION	DATE	BY
K	-7-8&-9 ADDED; TABLE REV.	1-11-51	C.K.
J	REDRAWN & REVISED	4-8-46	L.R.

THIS DRAWING IS THE PROPERTY OF THE PIPER AIRCRAFT CORP. AND ITS POSSESSION BY UNAUTHORIZED PERSONS SHALL NOT BE CONSTRUED AS PERMISSION TO REPRODUCE FOR SALE, IN WHOLE OR IN PART, ANY DEVICES SHOWN THEREON.

MODEL	PER PLANE	NEXT ASSEMBLY	SUPERSEDES	SUP. BY

PIPER AIRCRAFT CORP.
LOCK HAVEN, PENNA.

No. REQ.	SIZE	DESCRIPTION
	NOTED x 5/8 x 4½	NOTED

PART No.
MATERIAL
SCALE FULL SIZE
TOTAL WT.—LBS.
FINISH—PIPER SPECIFICATION #10
MANUFACTURING PRACTICES—PIPER SPECIFICATION #9

CLEVISES

L.R.	R.E.T.	
4-8-46	4-12-46	
DRAFTSMAN	CHECKER	STANDARDS

40521

PERCILTEX A. & B. SMITH CO., PGH., PA.

286

A 286

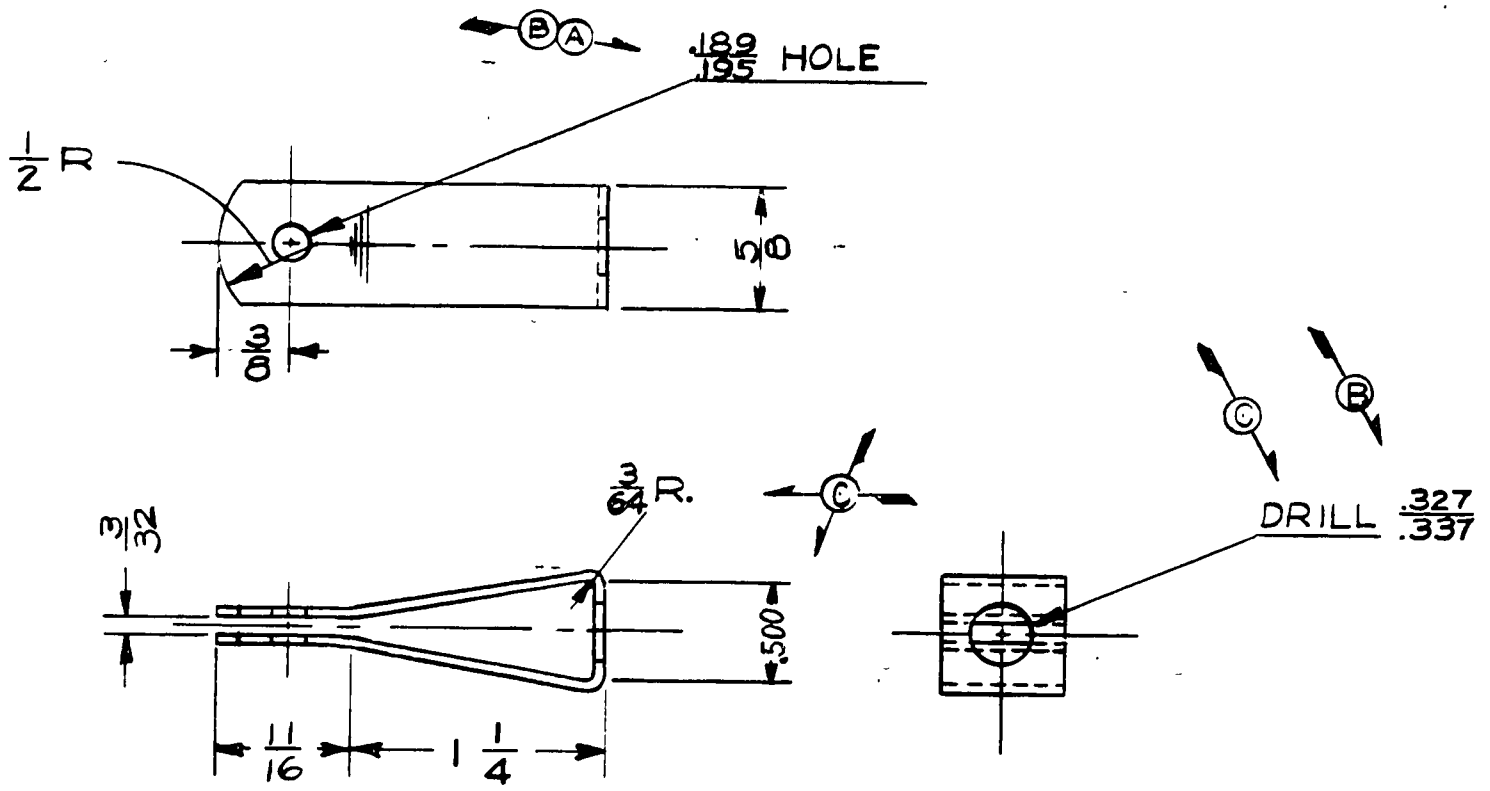

D F E

				T&B	2	41195			
				L4A,L4B	2	41195			
				L-14	2	90600			91577
				J5D,H,I	2	41195			
				J5,J5C	2	41195			
H	REDRAWN WITHOUT CHANGE	6-18-51	C.B.	J3	2	10556	J2-152		
G	J3 N.A. 10556 WAS 41195	4-5-46	L.R.	MODEL	PER PLANE	NEXT ASSEMBLY	SUPERSEDES	SUP. BY	
F	J5C MODEL REF. CAN.	9-25-45	I.M.M.						
E	SUP. BY 91577 FOR L-14	7-28-45	E.L.N.						
D	L-14 MODEL REF. ADDED	7-3-45	I.D.B.						
C	DIM'S. REVISED; DRILL WAS REAM	7-3-43	C.K.						
B	TOLERANCES ADDED	5-11-43	C.K.						
A	PILOT HOLE ADDED	12-31-41	RRB						
LET	REVISION	DATE	BY						

THIS DRAWING IS THE PROPERTY OF THE PIPER AIRCRAFT CORP. AND ITS POSSESSION BY UNAUTHORIZED PERSONS SHALL NOT BE CONSTRUED AS PERMISSION TO REPRODUCE FOR SALE IN WHOLE OR IN PART ANY DEVICES SHOWN THEREON.

PIPER AIRCRAFT CORP.
LOCK HAVEN, PENNA.

PART NO.	NO. REQ.	SIZE	DESCRIPTION / MATERIAL
		.045 x 5/8 x 4 1/2	#1025 STEEL

SCALE FULL SIZE | TOTAL WT.—LBS.
FINISH—PIPER SPECIFICATION # 10
MANUFACTURING PRACTICES—PIPER SPECIFICATION # 9

CLEVIS—FUSELAGE TIE ROD

F.B. 9-25-41	R.R.B. 9-30-41		40531
DRAFTSMAN	CHECKER	STANDARDS	

287

A 287

WAS E2-50

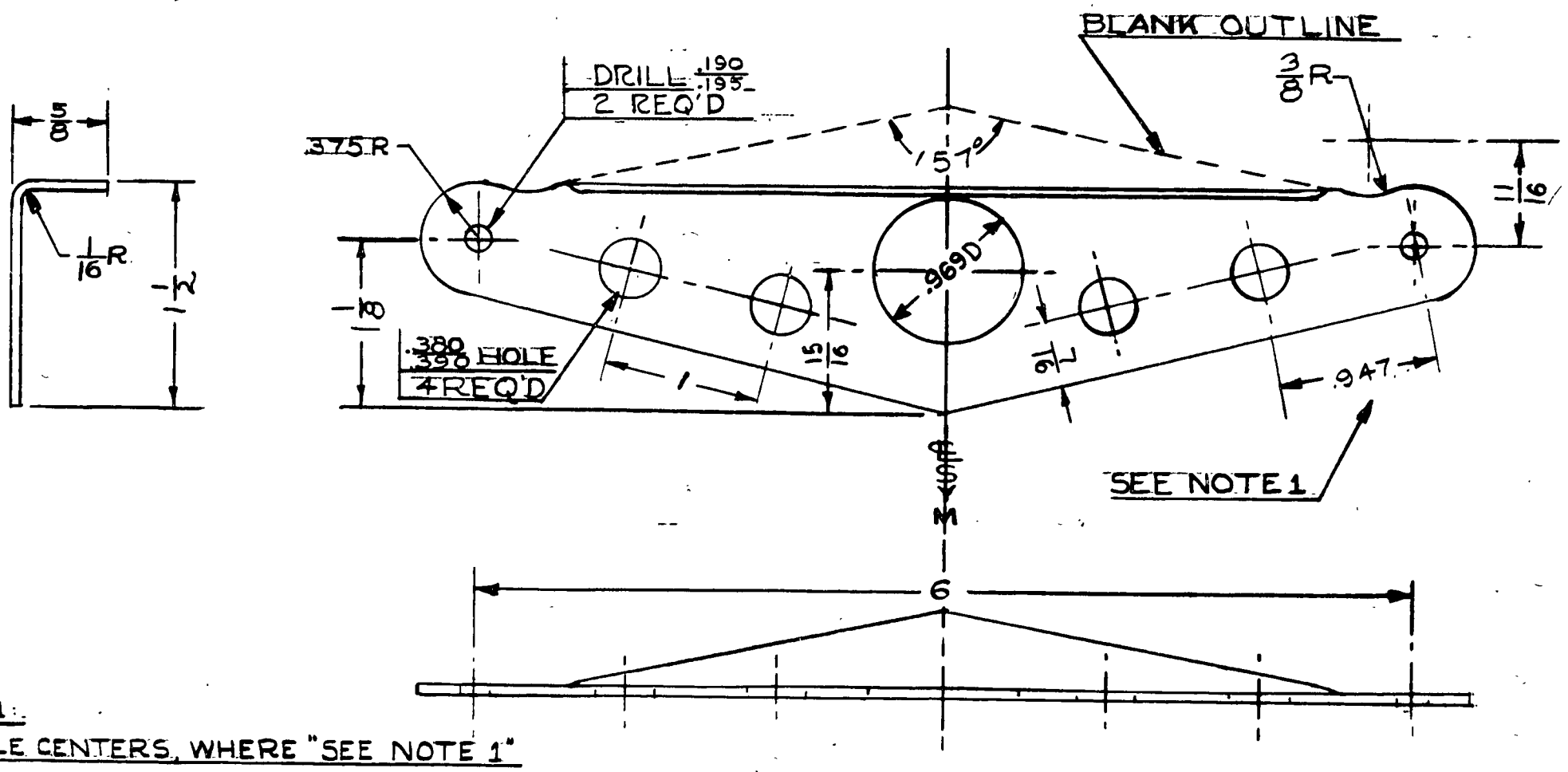

NOTE 1:
HOLE CENTERS, WHERE "SEE NOTE 1" IS INDICATED, SHALL COINCIDE WITH RELATED HOLE CENTERS ON 40821 AND 40351

LIMITS, SHOP PRACTICES AND FINISH, UNLESS OTHERWISE NOTED, TO BE IN ACCORDANCE WITH PIPER SPECIFICATIONS #9 AND #10.

PART No.	No. REQ.	SIZE	DESCRIPTION
		.062 x 2 1/32 x 6 3/4	#1025 STEEL

MATERIAL

SCALE FULL SIZE | TOTAL WT.-LBS.

FINISH

MODEL	PER SHIP	NEXT ASSEMBLY	SUPERSEDES	SUP. BY
[illegible]	2	40572		
[illegible]	2	40572		
[illegible]	2	40572		
[illegible]	2	40572		
[illegible]	2	40572		

HORN-ELEVATOR

LET.	REVISION	DATE	BY
H	REDRAWN NO CHANGE	2-17-44	V.C

PIPER AIRCRAFT CORP.
LOCK HAVEN, PENNA.

DRAWN	CHECKED	APPROVED
V. CROWLEY 2-17-44	C.K. 2-22-44	

40551

288

A288

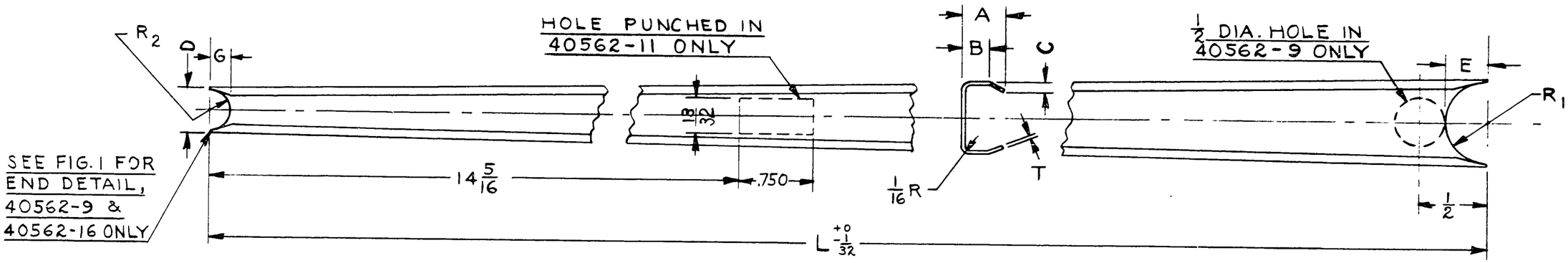

PART NO.	L	R_1	E	R_2	A	B	C	D	G	T	MATERIAL	OLD PART NO.
40562-2	17 5/8	.438	7/16	.188	3/8	3/16	3/32	—	3/16	.020	H.R. STEEL	J2-55
40562-3	17 7/8	.438	7/16	.188	3/8	3/16	3/32	—	3/16	.020	H.R. STEEL	J2-56
40562-4	14 13/16	.438	7/16	.188	3/8	3/16	3/32	—	3/16	.020	H.R. STEEL	J2-57
40562-5	12	.438	7/16	.188	3/8	3/16	3/32	—	5/16	.020	H.R. STEEL	43
40562-6	16 7/8	.438	7/16	.188	3/8	3/16	3/32	—	3/16	.020	H.R. STEEL	44
40562-7	19 3/4	.438	7/16	.188	3/8	3/16	3/32	—	3/16	.020	H.R. STEEL	45
40562-8	18 1/4	.438	7/16	.188	3/8	3/16	3/32	—	3/16	.020	H.R. STEEL	46
40562-9	15 3/4	.438	1/4	SQUARE END	1/2	5/16	1/16	7/16	—	.032	#1025 STEEL	J3-502
40562-10	14 7/8	.375	3/16	SQUARE END	1/2	5/16	1/16	9/16	—	.032	#1025 STEEL	J3-503
40562-11	24 15/16	.375	3/8	.250	3/8	3/16	3/32	—	1/4	.020	H.R. STEEL	J3-506
40562-12	12 1/8	.438	7/16	.188	3/8	3/16	3/32	—	3/16	.020	H.R. STEEL	J3-56
40562-13	15 1/2	.438	7/16	.188	3/8	3/16	3/32	—	3/16	.020	H.R. STEEL	J3-57
40562-14	18 7/8	.438	7/16	.188	3/8	3/16	3/32	—	3/16	.020	H.R. STEEL	J3-59
40562-15	12 25/32	.438	7/16	SQUARE END	3/8	3/16	3/32	1/2	—	.020	H.R. STEEL	
40562-16	16 7/8	.438	7/16	SQUARE END	1/2	5/16	1/16	1/2	—	.032	#1025 STEEL	
40562-17	15 3/4	.438	7/16	SQUARE END	1/2	5/16	1/16	1/2	—	.032	#1025 STEEL	
40562-18	10 15/16	.438	7/16	.188	3/8	3/16	3/32	—	3/16	.020	H.R. STEEL	
40562-19	14 3/8	.438	7/16	SQUARE END	1/2	5/16	1/16	7/16	—	.032	#1025 STEEL	
40562-20	13 3/16	.438	7/16	SQUARE END	1/2	5/16	1/16	7/16	—	.032	#1025 STEEL	



FIG. 1

THIS DRAWING IS THE PROPERTY OF THE PIPER AIRCRAFT CORP. AND ITS POSSESSION BY UNAUTHORIZED PERSONS SHALL NOT BE CONSTRUED AS PERMISSION TO REPRODUCE FOR SALE, IN WHOLE OR IN PART, ANY DEVICES SHOWN THEREON

LET.	REVISION	DATE	BY
X	REDRAWN & REVISED	6-4-51	C.K.

MODEL	PER PLANE	NEXT ASSEMBLY	SUPERSEDES	SUP. BY

PIPER AIRCRAFT CORP.
LOCK HAVEN, PENNA.

PART No.	No. REQ.	NOTED SIZE	NOTED DESCRIPTION / MATERIAL

SCALE FULL SIZE — TOTAL WT.—LBS.

FINISH—PIPER SPECIFICATION #10

MANUFACTURING PRACTICES—PIPER SPECIFICATION #9

RIBS—TAIL SURFACE

DRAFTSMAN	CHECKER	STANDARDS
C. E. K. 6-4-51	H. R. K. 6-6-51	

40562

636

A636

WAS A489 / D4152-C

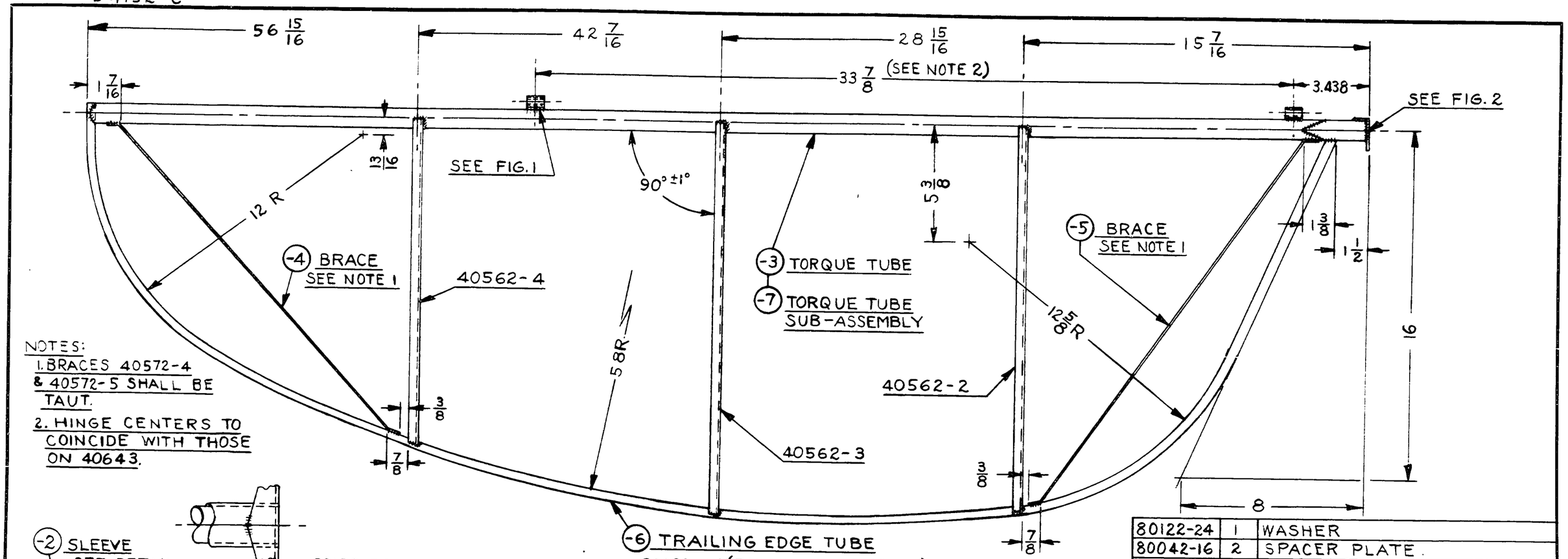

NOTES:
1. BRACES 40572-4 & 40572-5 SHALL BE TAUT.
2. HINGE CENTERS TO COINCIDE WITH THOSE ON 40643.

(-2) SLEEVE SEE DETAIL

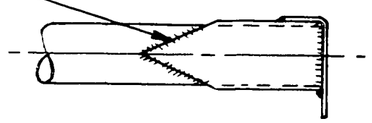

SLEEVE COMPRESSED TO FIT TORQUE TUBE

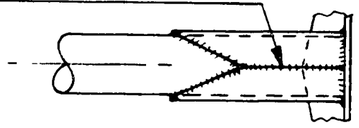

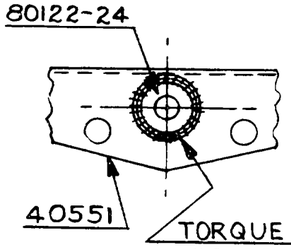

TORQUE TUBE, SLEEVE, WASHER & HORN ARE INCLUDED IN WELD BEAD

FIG. 2
HORN ATTACHMENT DETAIL
6 IN = 1 FT.

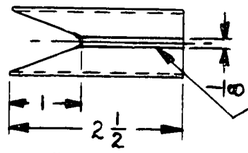

CUT 1/8 INCH SLOT IN -2 AS SHOWN

-2 DETAIL
6 IN. = 1 FT.

(-6) TRAILING EDGE TUBE
80022-44 (FORCE FIT IN 80022-21)

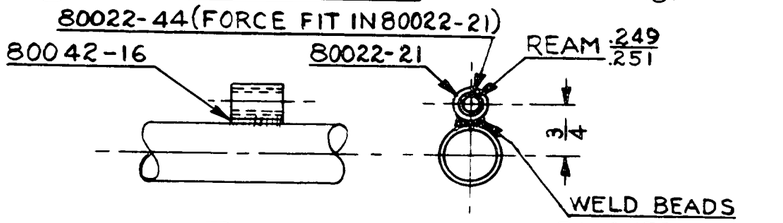

FIG. 1
HINGE DETAIL
6 IN = 1 FT.

PART NO.	NO. REQ.	SIZE	DESCRIPTION / MATERIAL
80122-24	1		WASHER
80042-16	2		SPACER PLATE
80022-44	2		BUSHINGS
80022-21	2		
40562-4	1		RIBS
40562-3	1		
40562-2	1		
40551	1		HORN
-7	—		SUB-ASSY OF -2, & -3
-6	1	3/8 x .028 x 74	*1025 STEEL TUBE
-5	1	3/32 x 21 3/8	*1010 C.F. STL. WIRE
-4	1	3/32 x 19 1/4	
-3	1	7/8 x .035 x 57	*1025 STEEL TUBE
-2	1	1 x .035 x 2 1/2	*1025 STEEL TUBE

SCALE 3 IN. = 1 FT. & NOTED — TOTAL WT.—LBS.
FINISH—PIPER SPECIFICATION # 10
MANUFACTURING PRACTICES—PIPER SPECIFICATION # 9

LET	REVISION	DATE	BY
J	REDRAWN WITHOUT CHANGE	6-6-51	C.K.
H	2 EA. OF 80042-16, 80022-21 & 80022-44 REM. FROM -7	2-8-46	D.A.W.
G	REDRAWN & REVISED	8-17-43	R.R.F.

MODEL	PER PLANE	NEXT ASSEMBLY	SUPERSEDES	SUP. BY
J5C	2	#1692		
J3L4A	2	#1692		

THIS DRAWING IS THE PROPERTY OF THE PIPER AIRCRAFT CORP. AND ITS POSSESSION BY UNAUTHORIZED PERSONS SHALL NOT BE CONSTRUED AS PERMISSION TO REPRODUCE FOR SALE IN WHOLE OR IN PART ANY DEVICES SHOWN THEREON.

PIPER AIRCRAFT CORP.
LOCK HAVEN, PENNA.

ELEVATOR ASSEMBLY

DRAFTSMAN	CHECKER	STANDARDS
R. FRANK 8-17-43	C. K. 8-18-43	

40572

H

6-37

A637

WAS 4070 / D4331-C , 4071 / D4107-C

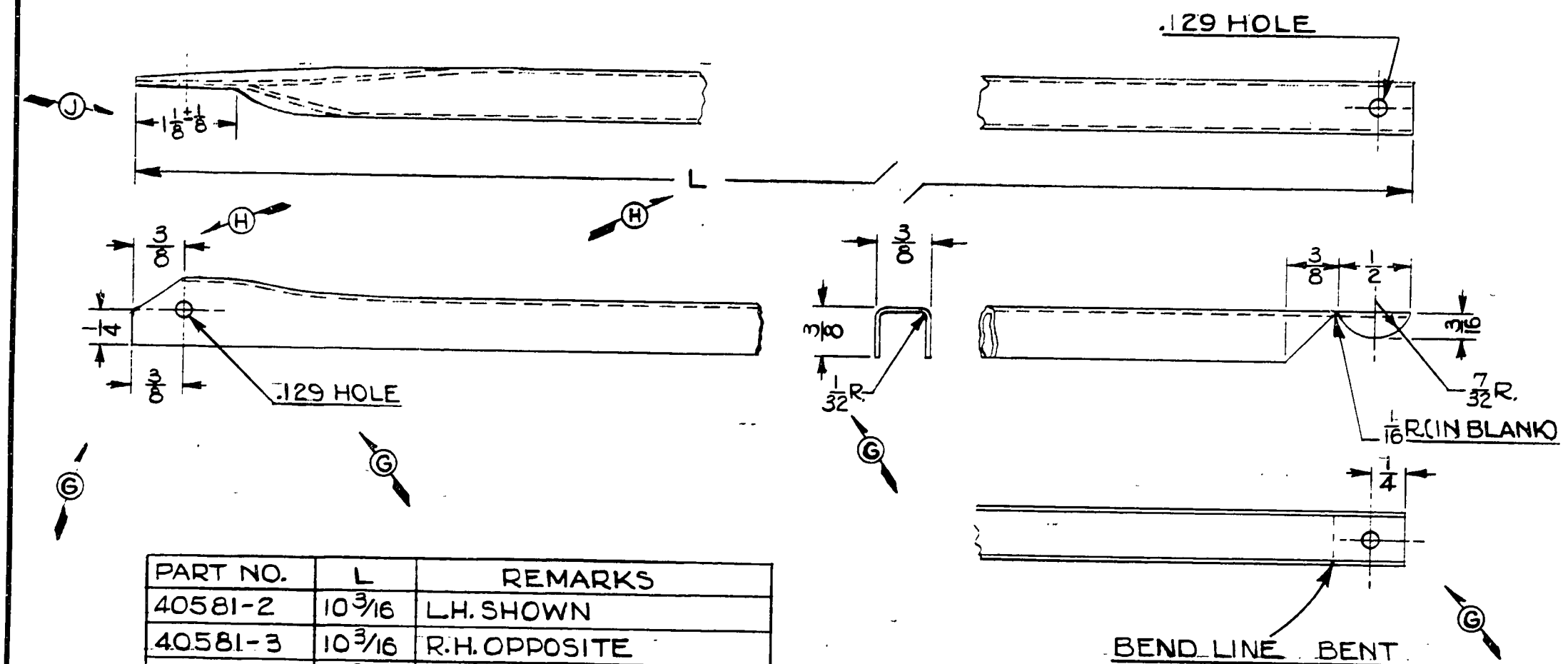

PART NO.	L	REMARKS
40581-2	10 3/16	L.H. SHOWN
40581-3	10 3/16	R.H. OPPOSITE
40581-4	6 3/4	L.H. SHOWN
40581-5	6 3/4	R.H. OPPOSITE

MODEL	PER PLANE	NEXT ASSEMBLY	SUPERSEDES	SUP. BY
L-14	2 OF 3	90030, 90047		
	2 OF 2	90032, 90049		
L-4	2 EA.	42585		
J3	2 EA.	42585		
J4	2 EA.	40444		
HE-1	2 EA.	40444		
SC-150	2 EA.	42555		
TG-8	2 EA.	40514		

LET	REVISION	DATE	BY
M	REDRAWN WITHOUT CHANGE	5-14-51	I.E.M.
L	-4 & -5 ADDED	2-27-50	C.K.
K	L-14 MODEL REF. ADDED	3-3-45	I.D.B.
J	1 1/8 ± 1/8 WAS 1 IN. MAX.	10-27-43	R.R.F.
H	10 5/16 WAS 10 1/2 ; 3/8 WAS 1/4	10-27-43	R.R.F.
G	ENDS REVISED; .129 HOLE & 1/2 R ADDED	9-10-43	W.G.T.
F	REDRAWN & REVISED	8-18-43	L.R.

THIS DRAWING IS THE PROPERTY OF THE PIPER AIRCRAFT CORP. AND ITS POSSESSION BY UNAUTHORIZED PERSONS SHALL NOT BE CONSTRUED AS PERMISSION TO REPRODUCE FOR SALE IN WHOLE OR IN PART ANY DEVICES SHOWN THEREON.

PIPER AIRCRAFT CORP.
LOCK HAVEN, PENNA.

PART NO.	NO. REQ.	SIZE	DESCRIPTION / MATERIAL
		.025 × 1 × NOTED	3S 1/2 H. ALUM.

SCALE FULL SIZE | TOTAL WT.—LBS.

FINISH—PIPER SPECIFICATION # 10

MANUFACTURING PRACTICES—PIPER SPECIFICATION # 9

BRACES - AILERON

DRAFTSMAN	CHECKER	STANDARDS	
L.R. 8-18-43	P.R.R. 8-19-43		40581

289

A289

WAS A493 / D4156-C

.250 HOLE AFTER WELDING.
SMOOTH SURFACE OF 80122-24

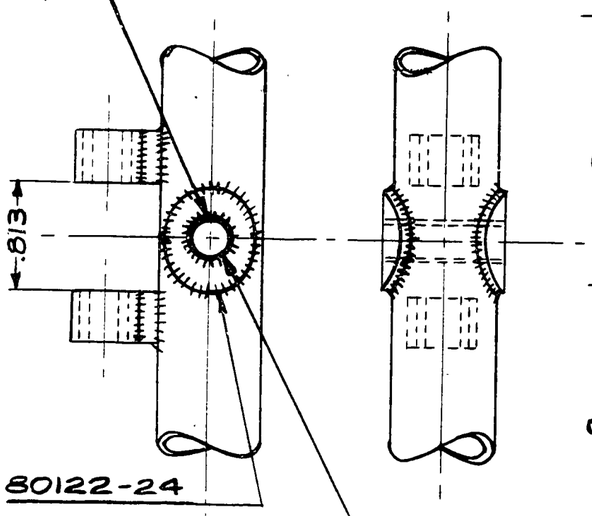

FIG. 1
HINGE DETAIL
FULL SIZE

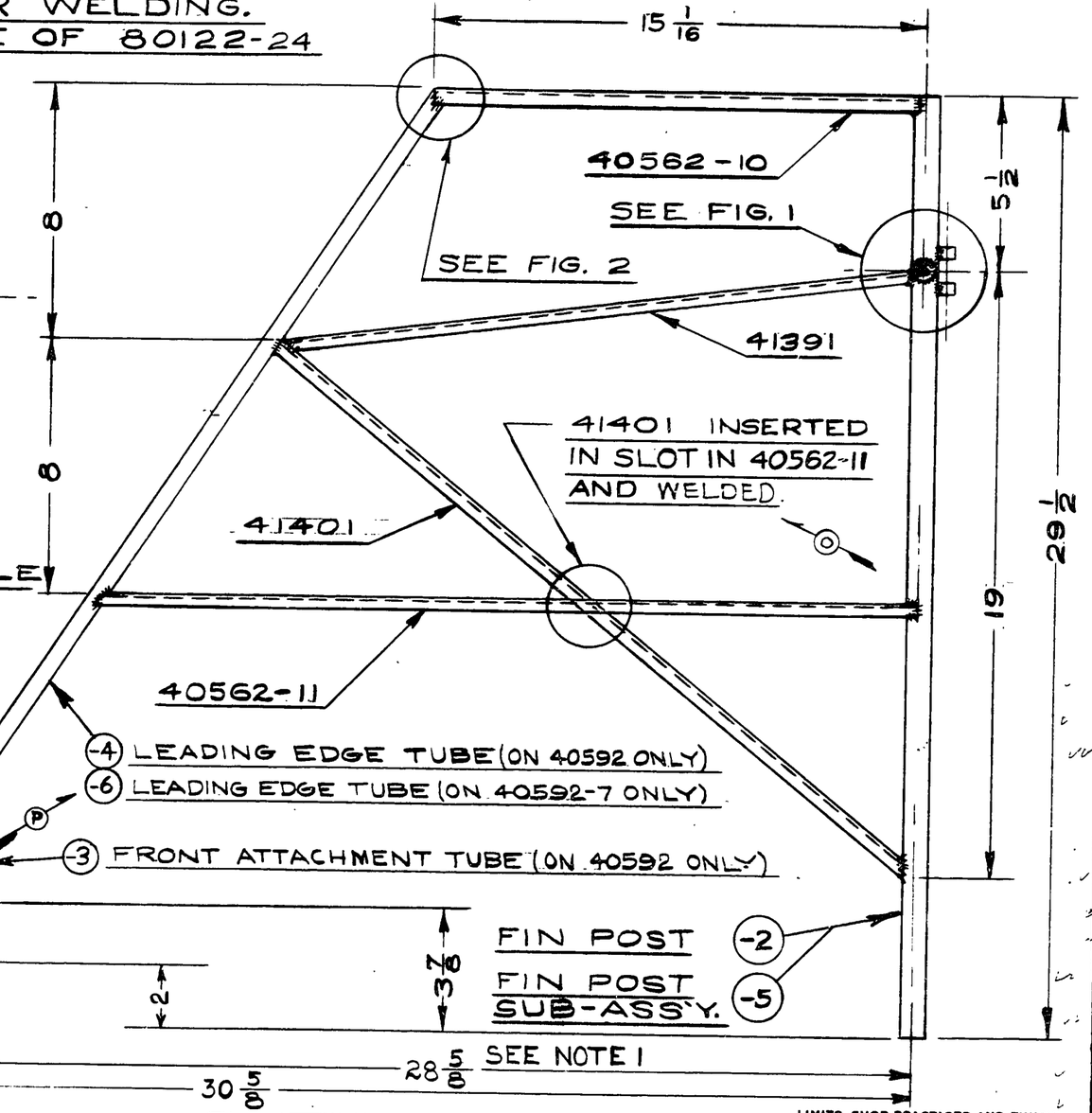

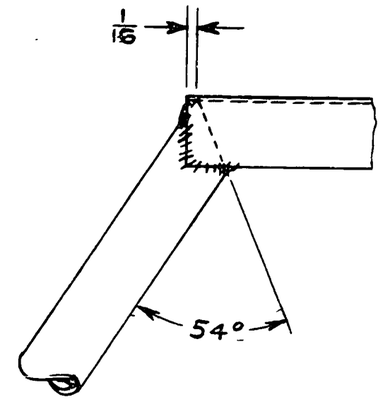

FIG. 2
FULL SIZE

40592 ASS'Y AS SHOWN
40592-7 ASS'Y AS SHOWN DOTTED

NOTE:
1. PARTS 40592-2 AND 40592-3 MUST FIT FIN ATTACHMENT FITTING ON DWG. 21346

LIMITS, SHOP PRACTICES AND FINISH. UNLESS OTHERWISE NOTED, TO BE IN ACCORDANCE WITH PIPER SPECIFICATIONS #9 AND #10.

LET.	REVISION	DATE	BY
P	-6 & -7 ADDED	11-25-47	J.C.B.
O	WELDED WAS BRAZED	2-13-47	C.E.K.
N	2 EACH OF 80042-24 & 80022-22 REM. FROM -5	8-8-46	D.A.W.
M	REDRAWN - NO CHANGE	2-18-44	J.B.M.

MODEL	PER SHIP	NEXT ASSEMBLY	SUPERSEDES	SUP. BY
[illegible]	1	41692		
[illegible]	1	41682		
[illegible]	1	41602		
[illegible]	1	41052		
[illegible]	1	20142		

PIPER AIRCRAFT CORP.
LOCK HAVEN, PENNA.

PART NO.	NO. REQ.	SIZE	DESCRIPTION MATERIAL
-6	1	1/2 x .028 x 32 1/2	#1025 STL. TUBE — USED ON ASSY 40592-7 ONLY
41401	1		LOWER BRACE
80122-24	2		WASHERS
80042-24	2		SPACERS
80022-45	2		BUSHINGS
80022-22	2		
80012-8	1		
40562-11	1		RIBS
40562-10	1		
41391	1		UPPER BRACE
-5			SUB-ASS'Y. OF -2, 80012-8 & 2 OF 80122-24
-4	1	1/2 x .028 x 26 1/2	#1025 STL. TUBE — USED ON ASS'Y 40592 ONLY
-3	1	5/8 x .035 x 4 3/32	
-2	1	3/4 x .035 x 29 1/2	#4130 ST. TUBE

SCALE 3 IN. = 1 FT. & NOTED — TOTAL WT. - LBS.
FINISH

FIN ASSEMBLY.

DRAWN	CHECKED	APPROVED
J.B.M. 2-18-44	C.K. 2-22-44	

40592

N

A638

WAS E2-516 / D458-A

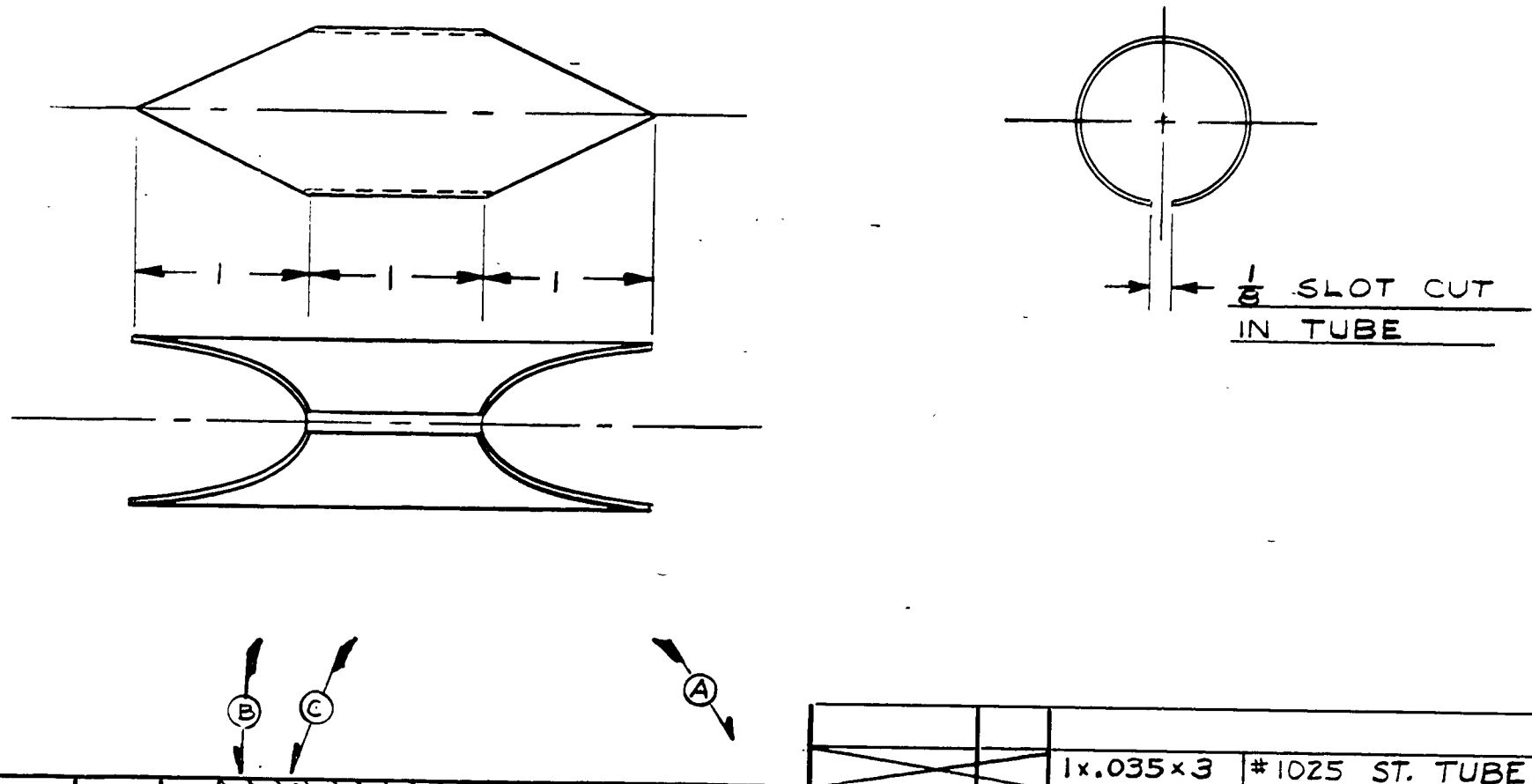

				L-14	1	90808		
				L4A,L4B	1	41313		
				J5D,HE-1	1	40622		
				J5,J5C	1	40622		
				J4	1	40622		
				J3,J3C	1	41313		
				MODEL	PER PLANE	NEXT ASSEMBLY	SUPERSEDES	SUP. BY

LET	REVISION	DATE	BY
D	REDRAWN WITHOUT CHANGE	6-18-51	C.B.
C	L-14 MODEL REF. ADDED	6-14-45	J.M.M.
B	HE-1 MODEL REF. ADDED	9-3-43	L.R.
A	"POST" IN TITLE BLOCK WAS "HORN"	8-9-43	I.D.B.

THIS DRAWING IS THE PROPERTY OF THE PIPER AIRCRAFT CORP. AND ITS POSSESSION BY UNAUTHORIZED PERSONS SHALL NOT BE CONSTRUED AS PERMISSION TO REPRODUCE FOR SALE IN WHOLE OR IN PART ANY DEVICES SHOWN THEREON.

PIPER AIRCRAFT CORP.
LOCK HAVEN, PENNA.

PART NO.	NO. REQ.	SIZE	DESCRIPTION
		1x.035x3	#1025 ST. TUBE

MATERIAL

SCALE FULL SIZE | TOTAL WT.—LBS.

FINISH—PIPER SPECIFICATION # 10

MANUFACTURING PRACTICES—PIPER SPECIFICATION # 3

SLEEVE - RUDDER POST REINFORCING

DRAFTSMAN	CHECKER	STANDARDS
W.N. EMERY 10-9-41	R.C.M. 11-4-41	

40601

290

A290

WAS E 2 - 515
D 423 - A

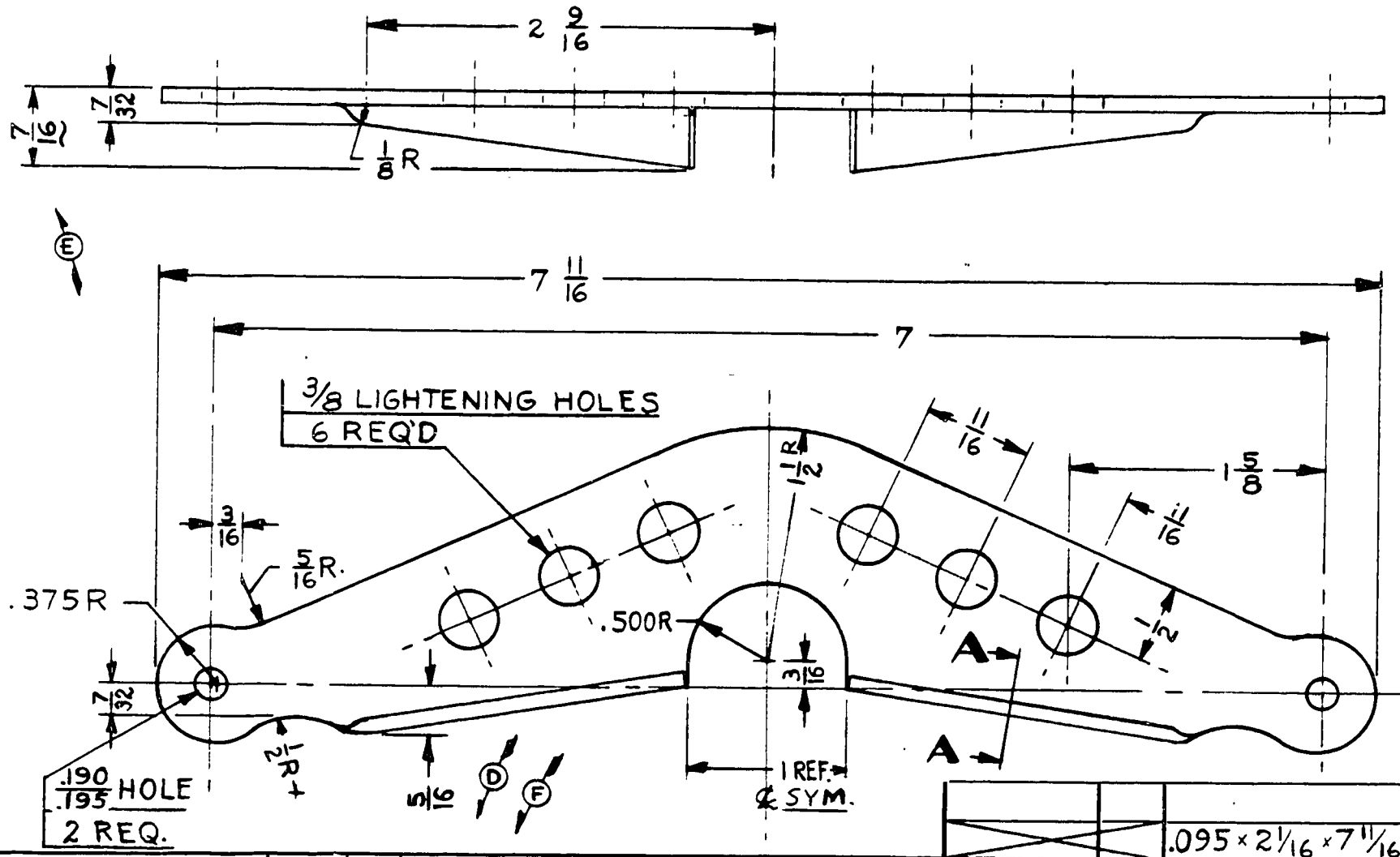

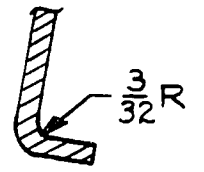

SECTION A-A

				K-14	1	90808			
				HE-1	1	40622			
				J3D	1	40622			
				J5, J5C	1	40622			
				J4, J4B	1	41313			
				J3, J3C	1	41313			
				MODEL	PER PLANE	NEXT ASSEMBLY	SUPERSEDES	SUP. BY	

LET	REVISION	DATE	BY
G	REDRAWN WITHOUT CHANGE	6-19-51	C.K.
F	L-14 MODEL REF. ADDED	6-14-45	R.D.R.
E	7/16 DIM. WAS 1/2	12-13-44	E.L.N.
D	HE-1 MODEL REF. ADDED	9-3-43	L.R.
C	REDRAWN & REVISED	7-14-43	R.R.F.

THIS DRAWING IS THE PROPERTY OF THE PIPER AIRCRAFT CORP. AND ITS POSSESSION BY UNAUTHORIZED PERSONS SHALL NOT BE CONSTRUED AS PERMISSION TO REPRODUCE FOR SALE IN WHOLE OR IN PART ANY DEVICES SHOWN THEREON.

PIPER AIRCRAFT CORP.
LOCK HAVEN, PENNA.

PART NO.	NO. REQ.	SIZE	DESCRIPTION
		.095 × 2 1/16 × 7 11/16	*1025 STEEL
		MATERIAL	

SCALE FULL SIZE | TOTAL WT.—LBS.

FINISH—PIPER SPECIFICATION # 10

MANUFACTURING PRACTICES—PIPER SPECIFICATION # 0

HORN—RUDDER

DRAFTSMAN	CHECKER	STANDARDS
R. FRANK 7-14-43	L. E. K. 7-19-43	

40611

291



WAS A495 / D4158-C

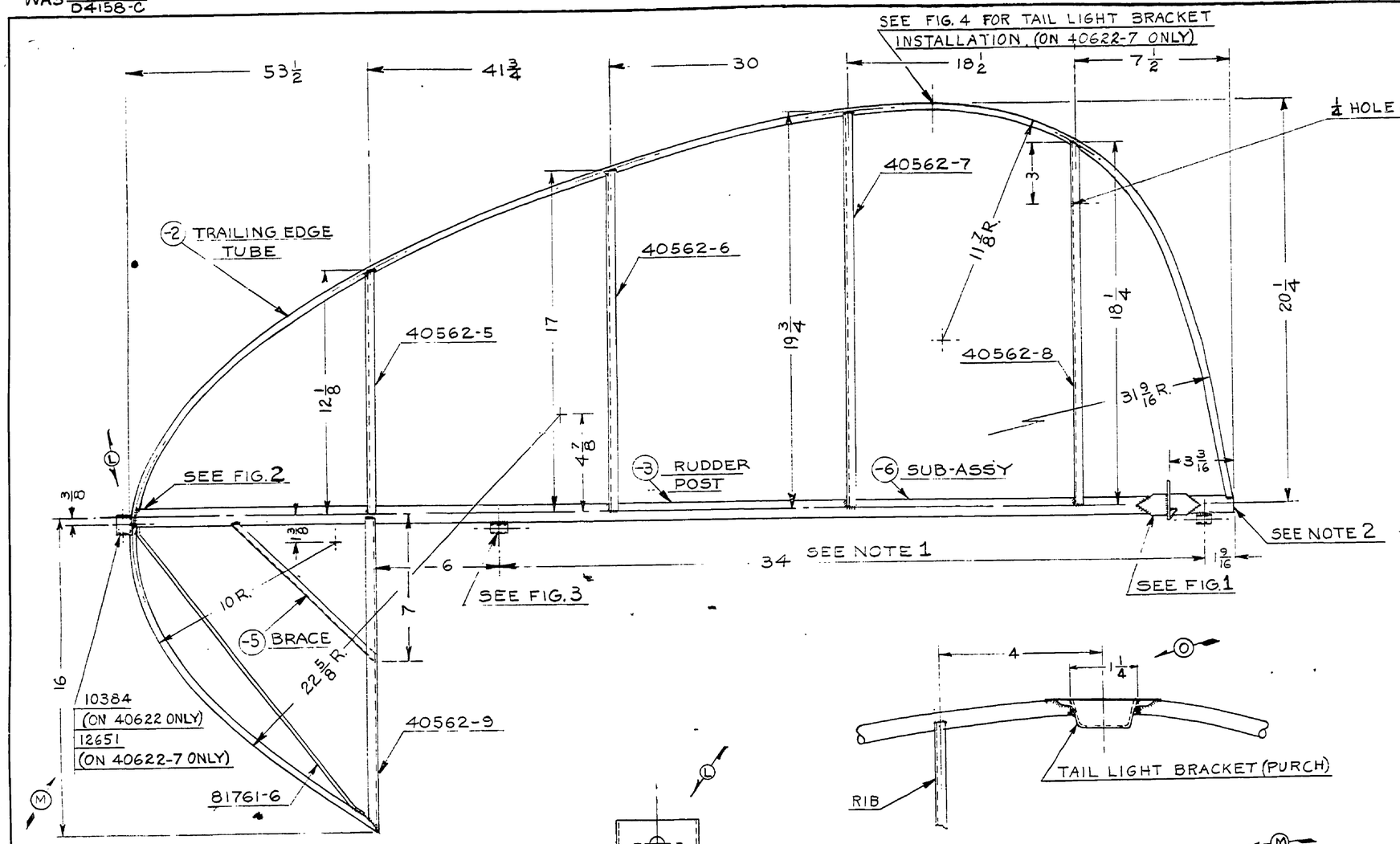

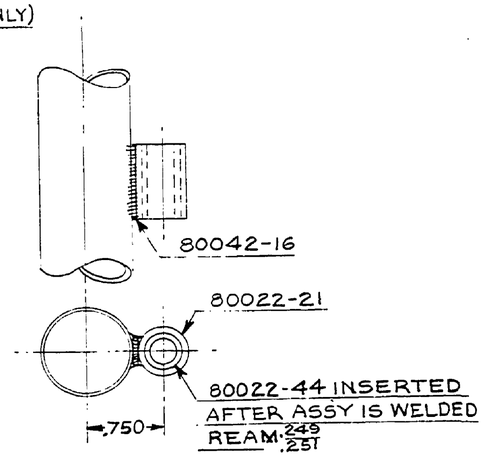

FIG. 3
HINGE ATTACH. DETAIL
FULL SIZE

FIG. 4
LIGHT BRACKET INST.
(ON 40622-7 ONLY)
6 IN. = 1 FT.

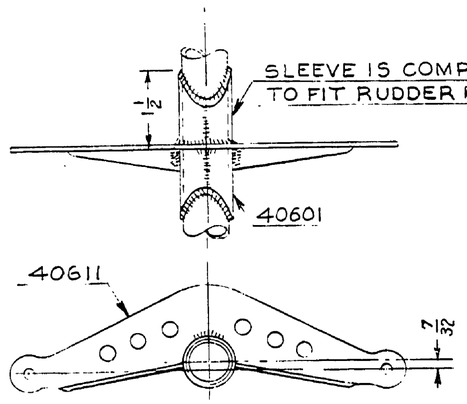

FIG. 1
HORN ATTACH. DETAIL
6 IN. = 1 FT.

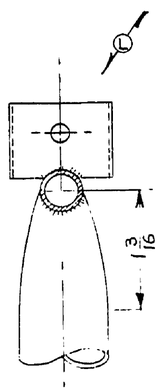

FIG. 2
RUDDER POST TO TRAILING EDGE ATTACHMENT
FULL SIZE

NOTES:
1. HINGE CENTERS TO COINCIDE WITH RELATED PARTS ON FIN AND FUSELAGE.
2. BOTTOM END OF RUDDER POST SWAGED .781 / .791 FOR A DISTANCE OF 2 IN. TO PROVIDE PROPER FITTING FOR RUDDER MAST.

40622 SHOWN (WITH TAILLIGHT BRACKET 10384)
40622-7 WITH GRIMES #A-3456 TAILLIGHT BRACKET & ANTENNA MAST BRACKET 12651
40622-8 SAME AS 40622 EXCEPT TAIL BRACKET 10384 OMITTED

PART NO.	NO. REQ.	MATERIAL SIZE	DESCRIPTION
12651	1	ANTENNA MAST BRKT. (ON 40622-7 ONLY)	
84511	DWG. REF. ONLY	CHANNEL SECTION	
	1	TAIL LIGHT BRACKET #A-3456 PURCH. GRIMES MFG. CO.	ON 40622-7 ONLY
81761-6	1	BRACE ROD	
80042-16	2	PLATE	
80022-44	2	BUSHINGS	
80022-21	2	BUSHINGS	
40611	1	HORN	
40601	1	SLEEVE	
40562-9	1	RIBS	
40562-8	1	RIBS	
40562-7	1	RIBS	
40562-6	1	RIBS	
40562-5	1	RIBS	
10384	1	TAIL LIGHT BRACKET (ON 40622 ONLY)	
-6	1	CONSISTS OF -3 & 40601	
-5	1	10 LONG	PIPER SECTION 84511
-4		3/32 DIA.	WELDROD
-3	1	7/8 x .035 x 53 5/16	#1025 STEEL TUBE
-2	1	3/8 x .028 x 94 1/2	#1025 STEEL TUBE

SCALE 3 IN. = 1 FT. & NOTED — TOTAL WT.—LBS.
FINISH—PIPER SPECIFICATION #10
MANUFACTURING PRACTICES—PIPER SPECIFICATION #9

RUDDER ASSEMBLY

LET.	REVISION	DATE	BY.
O	1/4 WAS 1 7/16	6-6-50	C.K.
N	-8 ADDED	12-15-49	K.D.
M	FIG. 4 -7 & 12651 ADDED	8-31-49	C.K.
L	VIEW OF 10384 REVISED	7-18-46	B.C.
K	#18GA WIRE REM.	7-9-46	C.E.K.
J	REDRAWN & REVISED	3-29-46	C.E.K.

THIS DRAWING IS THE PROPERTY OF THE PIPER AIRCRAFT CORP. AND ITS POSSESSION BY UNAUTHORIZED PERSONS SHALL NOT BE CONSTRUED AS PERMISSION TO REPRODUCE FOR SALE, IN WHOLE OR IN PART, ANY DEVICES SHOWN THEREON

MODEL	PER PLANE	NEXT ASSEMBLY	SUPERSEDES	SUP. BY
J3C	1	42443		

PIPER AIRCRAFT CORP.
LOCK HAVEN, PENNA.

DRAFTSMAN	CHECKER	STANDARDS	
C.E.K. 3-29-46	R.E.T. 7-29-46		40622

A806

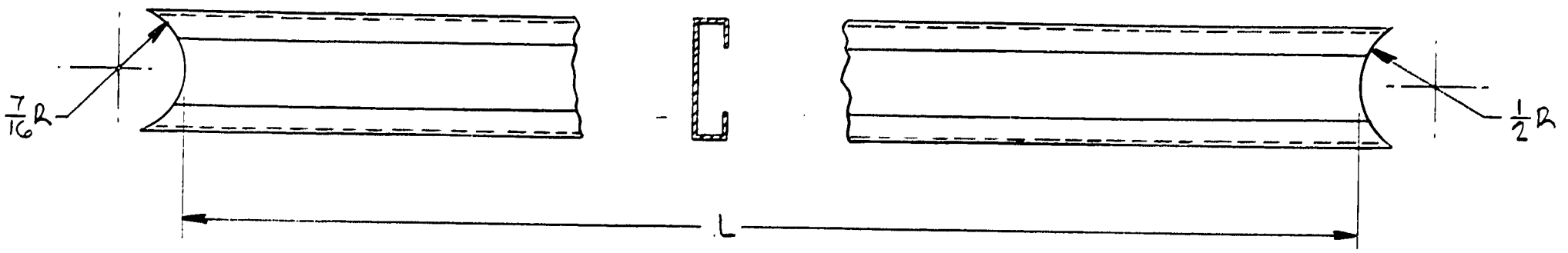

PART NO.	L	REMARKS
40631-2	25 11/32 +0 -1/32	WAS 4089
40631-3	24 17/32 +0 -1/32	WAS 4090
40631-4	21 1/8 +0 -1/32	WAS 4091
40631-5	14 3/32 +0 -1/32	WAS 4092
40631-6	17 7/16 +0 -1/32	
40631-7	16 3/4 +0 -1/32	
40631-8	15 7/16 +0 -1/32	
40631-9	12 7/8 +0 -1/32	
40631-10	21 13/16 +0 -1/32	
40631-11	16 15/16 +0 -1/32	

LET	REVISION	DATE	BY
O	REDRAWN & REVISED	6-19-51	M.G.

MODEL | PER PLANE | NEXT ASSEMBLY | SUPERSEDES | SUP. BY

THIS DRAWING IS THE PROPERTY OF THE PIPER AIRCRAFT CORP. AND ITS POSSESSION BY UNAUTHORIZED PERSONS SHALL NOT BE CONSTRUED AS PERMISSION TO REPRODUCE FOR SALE IN WHOLE OR IN PART ANY DEVICES SHOWN THEREON.

PIPER AIRCRAFT CORP.
LOCK HAVEN, PENNA.

84491 | DWG. REF. ONLY | CHANNEL SECTION
NOTED | PIPER SECTION 84491
PART NO. | NO. REQ. | SIZE | DESCRIPTION
MATERIAL
SCALE FULL SIZE | TOTAL WT.—LBS.
FINISH—PIPER SPECIFICATION # 10
MANUFACTURING PRACTICES—PIPER SPECIFICATION # 9

RIBS—STABILIZER

DRAFTSMAN	CHECKER	STANDARDS
M.W.G. 6-19-51	H. R. K. 6-21-51	

40631

292

A 292

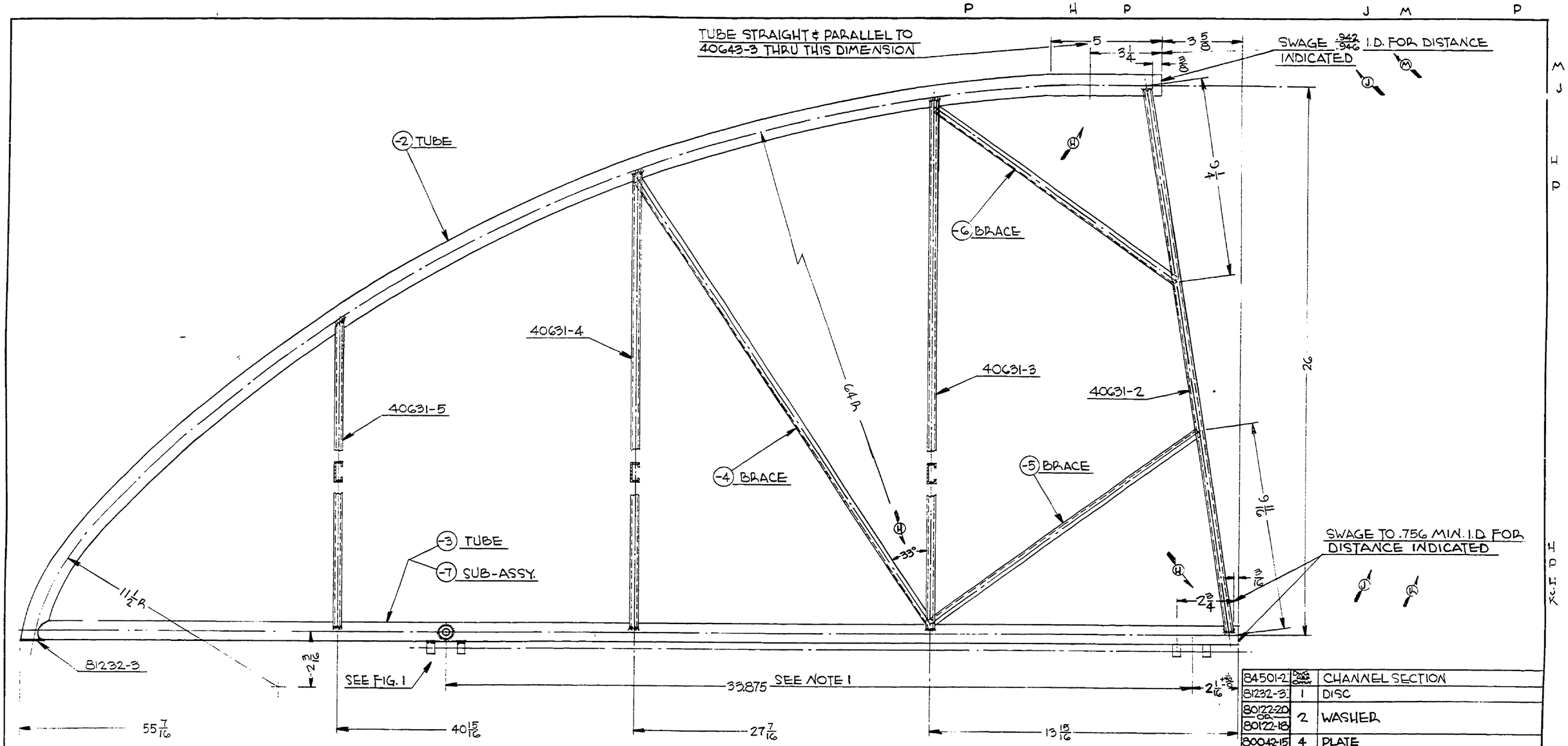

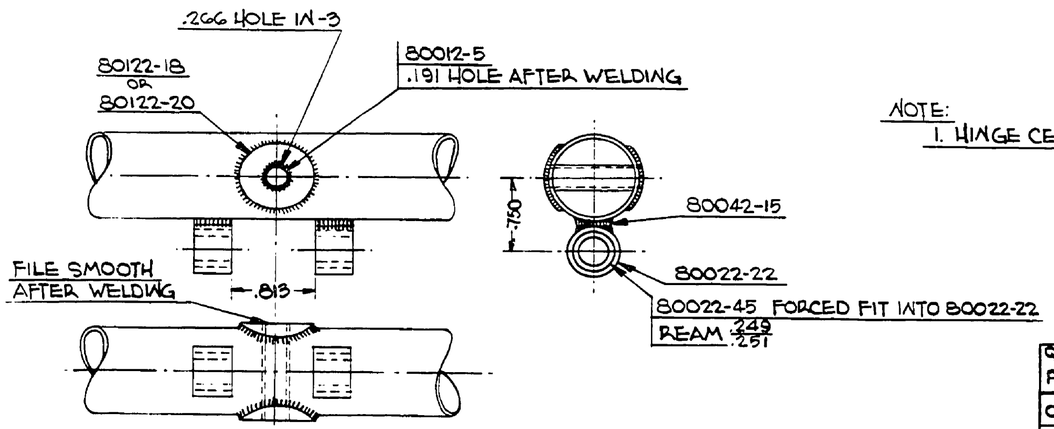

FIG. 1
HINGE & TIE ROD FITTING DETAIL
FULL SIZE

NOTE:
1. HINGE CENTERS TO COINCIDE WITH THOSE ON 40572.

PART No.	No. REQ.	SIZE	DESCRIPTION
84501-2	Dwg. Ref. Only		CHANNEL SECTION
81232-3	1		DISC
80122-20 OR 80122-18	2		WASHER
80042-15	4		PLATE
80022-45	4		BUSHING
80022-22	4		BUSHING
80012-5	1		BUSHING
40631-5	1		RIB
40631-4	1		RIB
40631-3	1		RIB
40631-2	1		RIB
-7			SUB-ASSY. CONSISTS OF: 1 EA. OF -3 & 80012-5; 2 OF 80122-18 OR 80122-20
-6	1	13 15/16 LONG	PIPER SECTION 84501-2
-5	1	15 3/8 LONG	PIPER SECTION 84501-2
-4	1	24 15/16 LONG	PIPER SECTION 84501-2
-3	1	7/8×.049×54 3/4	#1025 ST. TUBE
-2	1	1×.028×61	#4130 STEEL SEAMLESS TUBE

MATERIAL

SCALE 4" = 1 FT. & NOTED — TOTAL WT.—LBS.

FINISH—PIPER SPECIFICATION #10

MANUFACTURING PRACTICES—PIPER SPECIFICATION #9

LET.	REVISION	DATE	BY
Q	REDRAWN WITHOUT CHANGE	6-19-51	M.G.
P	-8, -9, -10, 10143-74, 86102-37, 86102-38 REM'D	1-16-48	J.C.B.
O	-8, -9, -10, 10143-74, 86102-37, 86102-38 ADDED	11-26-47	J.C.B.
N	4 EA. OF 80022-22 & 80042-15 REM. FROM -7	2-8-46	D.A.W.
M	.942/.946 WAS .946/.950	12-28-44	I.M.M.
L	MAT'L. SPEC. REV. FOR -2	1-7-44	J.B.M.
K	NOTE REVISED	12-7-43	I.M.M.
J	NOTES ADDED	8-12-43	C.E.K.
H	33, 2 3/4 & 5 1/4 DIM'S ADDED	8-12-43	C.E.K.
G	REDRAWN & REVISED	4-22-43	M.G.S.

MODEL	PER PLANE	NEXT ASSEMBLY	SUPERSEDES	SUP. BY
J5B, NE-1	2	41652		
J5, J5C	2	41652		
J4B, J6B	2	41652		
J5, L-4A	2	41652		

THIS DRAWING IS THE PROPERTY OF THE PIPER AIRCRAFT CORP. AND ITS POSSESSION BY UNAUTHORIZED PERSONS SHALL NOT BE CONSTRUED AS PERMISSION TO REPRODUCE FOR SALE, IN WHOLE OR IN PART, ANY DEVICES SHOWN THEREON

PIPER AIRCRAFT CORP.
LOCK HAVEN, PENNA.

STABILIZER ASSEMBLY

DRAFTSMAN	CHECKER	STANDARDS
M.G.S. 4-22-43	L.E.K. 7-1-43	

40643

807

A807

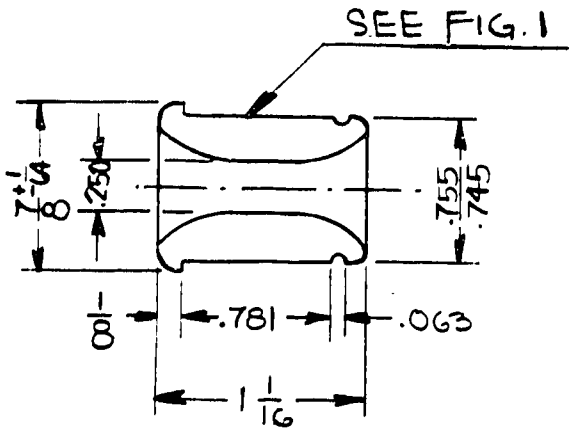



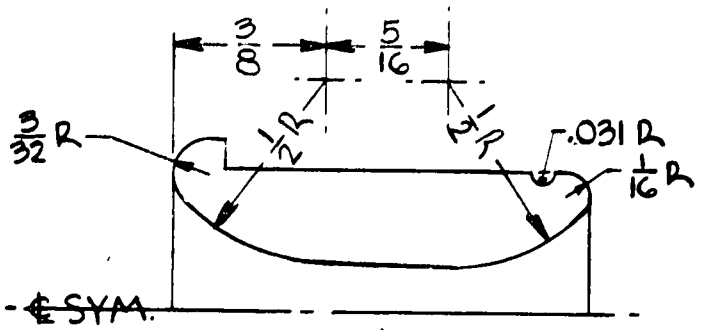

FIG 1
TWICE SIZE

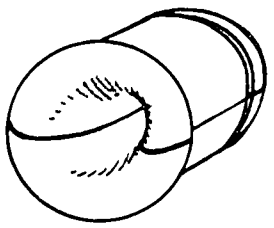

NOTE:
THIS PART USED IN PAIRS AS SHOWN

LET	REVISION	DATE	BY
Q	REV. & REDRAWN	6-14-51	M.G.

MODEL	PER PLANE	NEXT ASSEMBLY	SUPERSEDES	SUP. BY

THIS DRAWING IS THE PROPERTY OF THE PIPER AIRCRAFT CORP. AND ITS POSSESSION BY UNAUTHORIZED PERSONS SHALL NOT BE CONSTRUED AS PERMISSION TO REPRODUCE FOR SALE IN WHOLE OR IN PART ANY DEVICES SHOWN THEREON.

PIPER AIRCRAFT CORP.
LOCK HAVEN, PENNA.

PART NO.	NO. REQ.	SIZE	DESCRIPTION / MATERIAL
		7/8 DIA. x 1 1/16	HARD FIBRE

SCALE FULL SIZE & NOTED | TOTAL WT.—LBS.
FINISH—PIPER SPECIFICATION # 10
MANUFACTURING PRACTICES—PIPER SPECIFICATION # 9

SEGMENT - CABLE FAIRLEAD

DRAFTSMAN	CHECKER	STANDARDS	
M.W.G. 6-14-51			40701

293

A 293

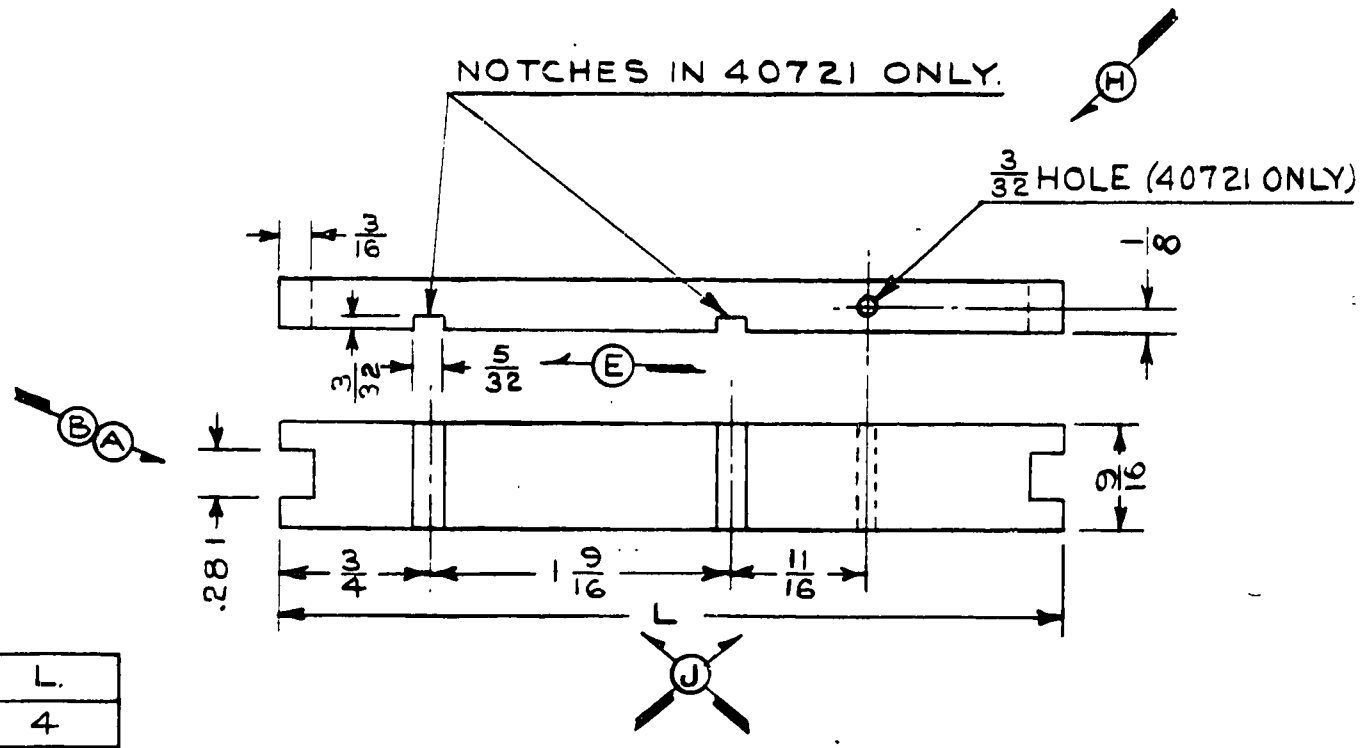

PART NO	L.
40721	4
40721-2	4
40721-3	5

G

C

LET	REVISION	DATE	BY
K	REDRAWN WITHOUT CHANGE	5-29-51	I.M.M.
J	19/16 WAS 2; 11/16 WAS 1/4	1-9-50	M.G.
H	ONE NOTCH REPLACED WITH 3/32 HOLE 40721	12-5-49	K.D.
G	-3 ADDED	12-27-48	R.M.
F	-2 ADDED	8-9-48	R.C.
E	5/32 WAS 3/32	5-6-47	J.M.M.
D	J5C MODEL REF. ADDED	8-1-46	I.D.B.
C	J3 NEXT ASSY 24146 WAS 40742	10-7-43	M.S.
B	.281 WAS 9/32	5-14-43	C.E.K.
A	9/32" WAS 1/4"	2-17-42	C.E.V.

MODEL	PER PLANE	NEXT ASSEMBLY	SUPERSEDES	SUP. BY
J5C	1	41882		
TG-8	1	40742		
L-4B	1	40742		
L-4A	1	40742		
J3	1	24146		

THIS DRAWING IS THE PROPERTY OF THE PIPER AIRCRAFT CORP. AND ITS POSSESSION BY UNAUTHORIZED PERSONS SHALL NOT BE CONSTRUED AS PERMISSION TO REPRODUCE FOR SALE IN WHOLE OR IN PART ANY DEVICES SHOWN THEREON.

PIPER AIRCRAFT CORP.
LOCK HAVEN, PENNA.

PART NO.	NO. REQ.	SIZE	DESCRIPTION
		1/4 x 9/16 x NOTED	HARD FIBER
		MATERIAL	

SCALE FULL SIZE — TOTAL WT.—LBS.

FINISH—PIPER SPECIFICATION # 10

MANUFACTURING PRACTICES—PIPER SPECIFICATION # 9

BLOCK—STABILIZER ADJUSTMENT CONTROL CABLE GUIDE

F. E.	R. C. M.	
10-10-41	10-14-41	
DRAFTSMAN	CHECKER	STANDARDS

40721

294

A294

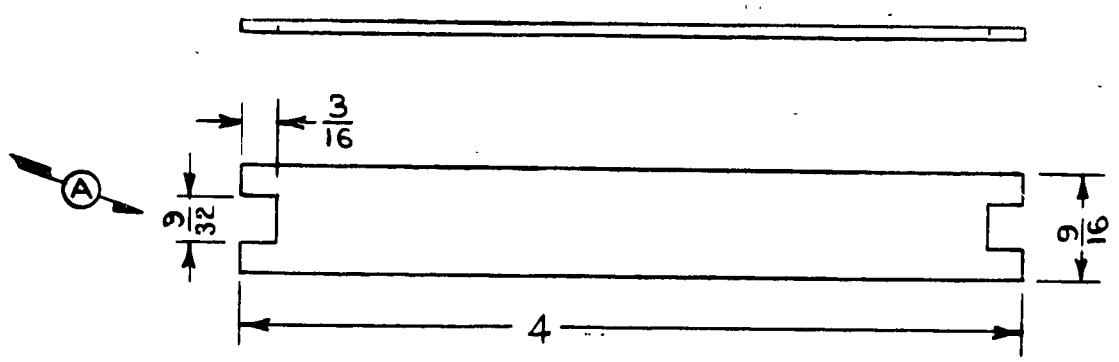

B

		1/16 x 9/16 x 4	HARD FIBER
PART NO.	NO. REQ.	SIZE	DESCRIPTION
		MATERIAL	

SCALE FULL SIZE | TOTAL WT.—LBS.

FINISH—PIPER SPECIFICATION # 10

MANUFACTURING PRACTICES—PIPER SPECIFICATION # 9

MODEL	PER PLANE	NEXT ASSEMBLY	SUPERSEDES	SUP. BY
TG-8	1	40742		
J-4B	1	40742		
L-4A	1	40742		
J3	1	24146		

PLATE — STABILIZER ADJUSTMENT CONTROL CABLE RUB

LET	REVISION	DATE	BY
C	REDRAWN WITHOUT CHANGE	5-29-51	I.M.M.
B	J3 NEXT ASSY 24146 WAS 40742	10-7-43	M.G.S
A	9/32" WAS 1/4"	2-17-42	C.E.V.

THIS DRAWING IS THE PROPERTY OF THE PIPER AIRCRAFT CORP. AND ITS POSSESSION BY UNAUTHORIZED PERSONS SHALL NOT BE CONSTRUED AS PERMISSION TO REPRODUCE FOR SALE IN WHOLE OR IN PART ANY DEVICES SHOWN THEREON.

PIPER AIRCRAFT CORP.
LOCK HAVEN, PENNA.

F. E.	R. C. M.		
10-10-41	10-14-41		**40731**
DRAFTSMAN	CHECKER	STANDARDS	

295

A295

WAS 4231 / D4261-A

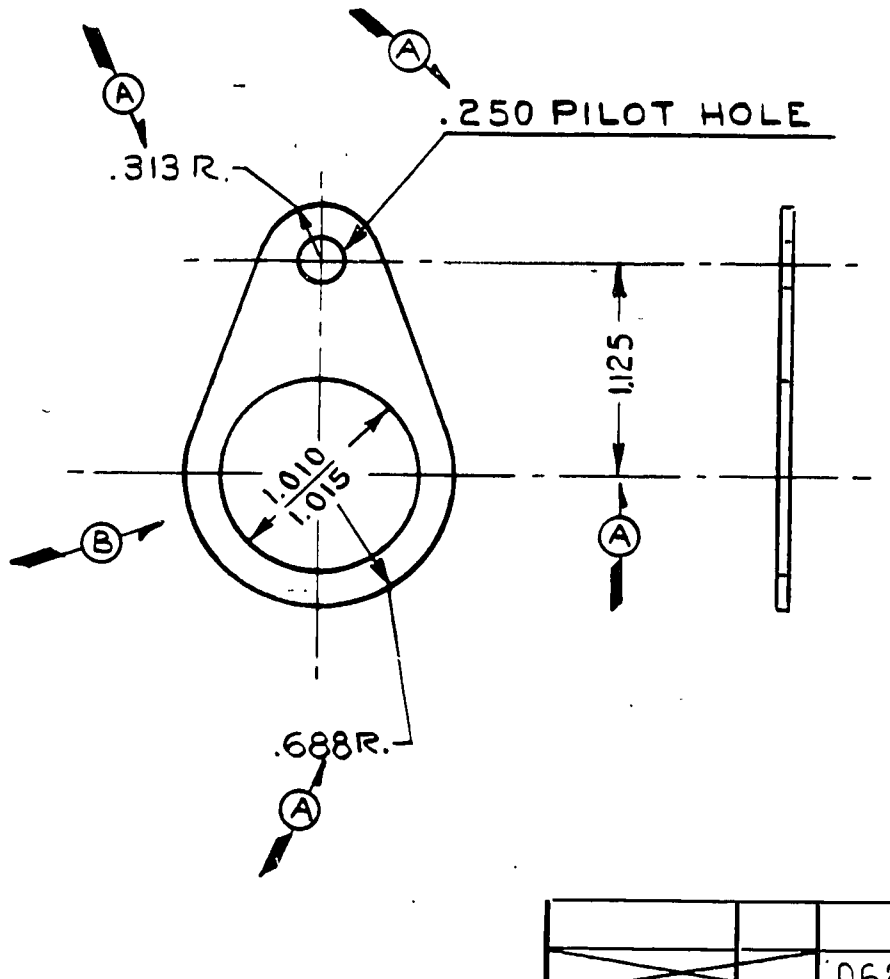

				HE-J5D	4	40771			
				L-14	4	40771			
				J4A-J4B	4	40771			
				J5-J5C	4	40771			
				J3F6-5	4	40771			
				MODEL	PER PLANE	NEXT ASSEMBLY	SUPERSEDES	SUP. BY	
D	REDRAWN WITHOUT CHANGE	5-31-51	I.M.M.	THIS DRAWING IS THE PROPERTY OF THE PIPER AIRCRAFT CORP. AND ITS POSSESSION BY UNAUTHORIZED PERSONS SHALL NOT BE CONSTRUED AS PERMISSION TO REPRODUCE FOR SALE IN WHOLE OR IN PART ANY DEVICES SHOWN THEREON.					
C	L-14 MODEL REF. ADDED	7-5-45	I.D.B.						
B	1.010 / 1.015 WAS 1.010	6-29-43	H.R.K.	PIPER AIRCRAFT CORP. LOCK HAVEN, PENNA.					
A	DECIMALS WERE FRACTIONS	5-11-43	R.R.F.						
LET	REVISION	DATE	BY						

PART NO.	NO. REQ.	SIZE	MATERIAL
		.062 x 1 3/8 x 2 1/8	#1025 STEEL

SCALE FULL SIZE | TOTAL WT.—LBS.

FINISH—PIPER SPECIFICATION # 10

MANUFACTURING PRACTICES—PIPER SPECIFICATION # 9

LUG — STABILIZER ADJUSTMENT LINK

DRAFTSMAN	CHECKER	STANDARDS
W.N. EMERY 10-13-41	R.C.M. 11-5-41	

40761

296

A 296

WAS A4052 / D4254-B

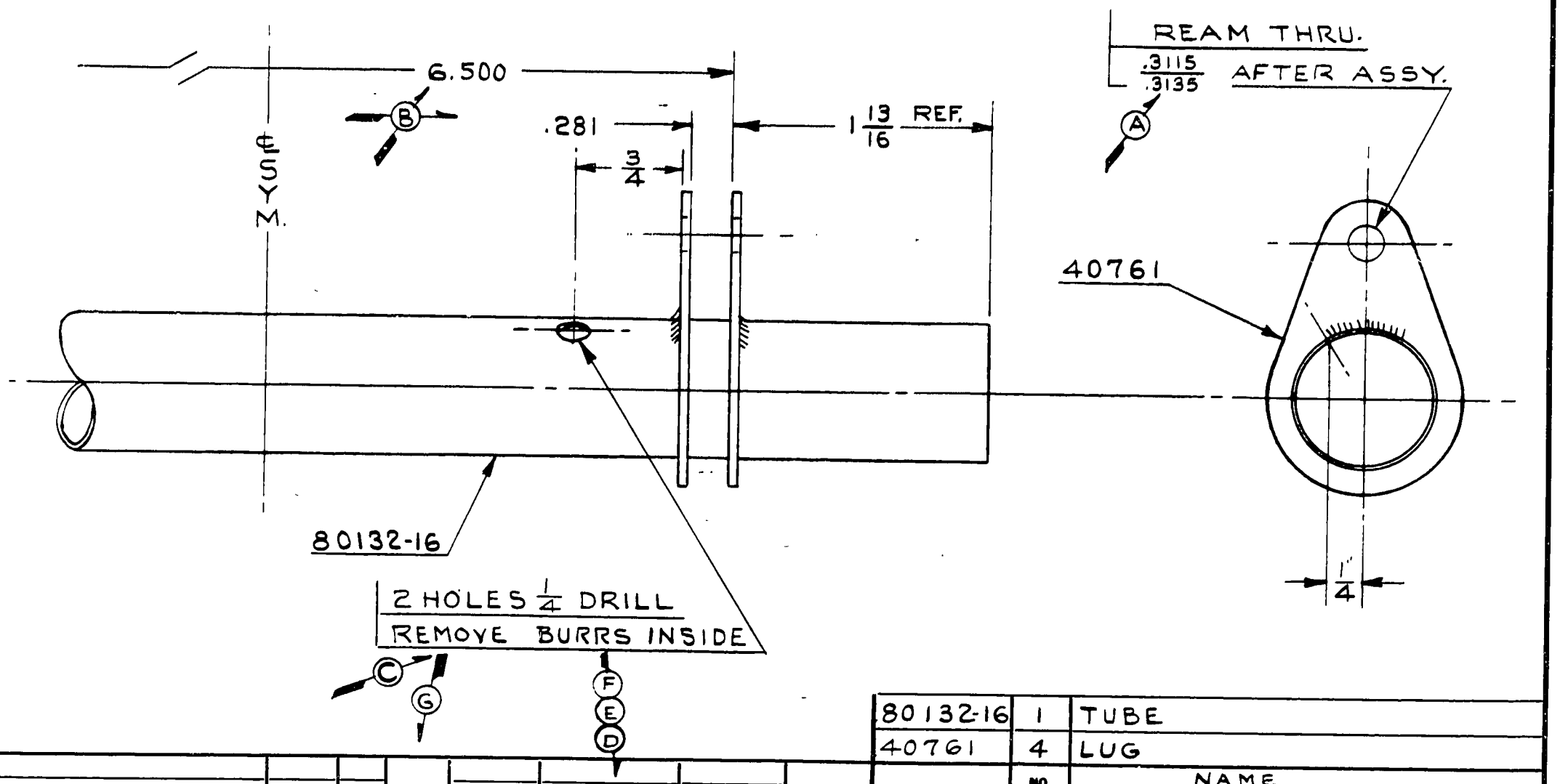

PART NO.	NO. REQ.	NAME / MATERIAL
80132-16	1	TUBE
40761	4	LUG

SCALE FULL SIZE | TOTAL WT.—LBS.

FINISH—PIPER SPECIFICATION # 10

MANUFACTURING PRACTICES—PIPER SPECIFICATION # 9

LINK ASSEMBLY— STABILIZER ADJUSTMENT

MODEL	PER PLANE	NEXT ASSEMBLY	SUPERSEDES	SUP. BY
J5 L-4B	1	40813		
J5C L-14	1	42664		
L-4A J3	1	42664		
J5D HE-1	1	40813		
TG-8	1	40813		

LET	REVISION	DATE	BY
H	REDRAWN WITHOUT CHANGE	5-31-51	L.M.M.
G	L-14 MODEL REF. ADDED	7-5-45	I.D.B.
F	J5C NEXT ASSY. 42664 WAS 40813	12-21-43	I.D.B.
E	J3 NEXT ASSY. 42664 WAS 40813	8-23-43	R.E.T.
D	L-4A NEXT ASSY. 42664 WAS 40813	7-30-43	R.E.T.
C	"REMOVE BURRS INSIDE" ADDED	4-16-43	C.K.
B	6.500 WAS 6 1/2 · .281 WAS 9/32	3-25-43	C.E.K.
A	.3115 .3135 WAS .312 ± .002	3-25-43	C.E.K.

THIS DRAWING IS THE PROPERTY OF THE PIPER AIRCRAFT CORP. AND ITS POSSESSION BY UNAUTHORIZED PERSONS SHALL NOT BE CONSTRUED AS PERMISSION TO REPRODUCE FOR SALE IN WHOLE OR IN PART ANY DEVICES SHOWN THEREON.

PIPER AIRCRAFT CORP.
LOCK HAVEN, PENNA.

DRAFTSMAN	CHECKER	STANDARDS	
W.N. EMERY 10-14-41	R-C.M. 11-6-41		**40771**

297

A297

WAS A4052 / D4254-8

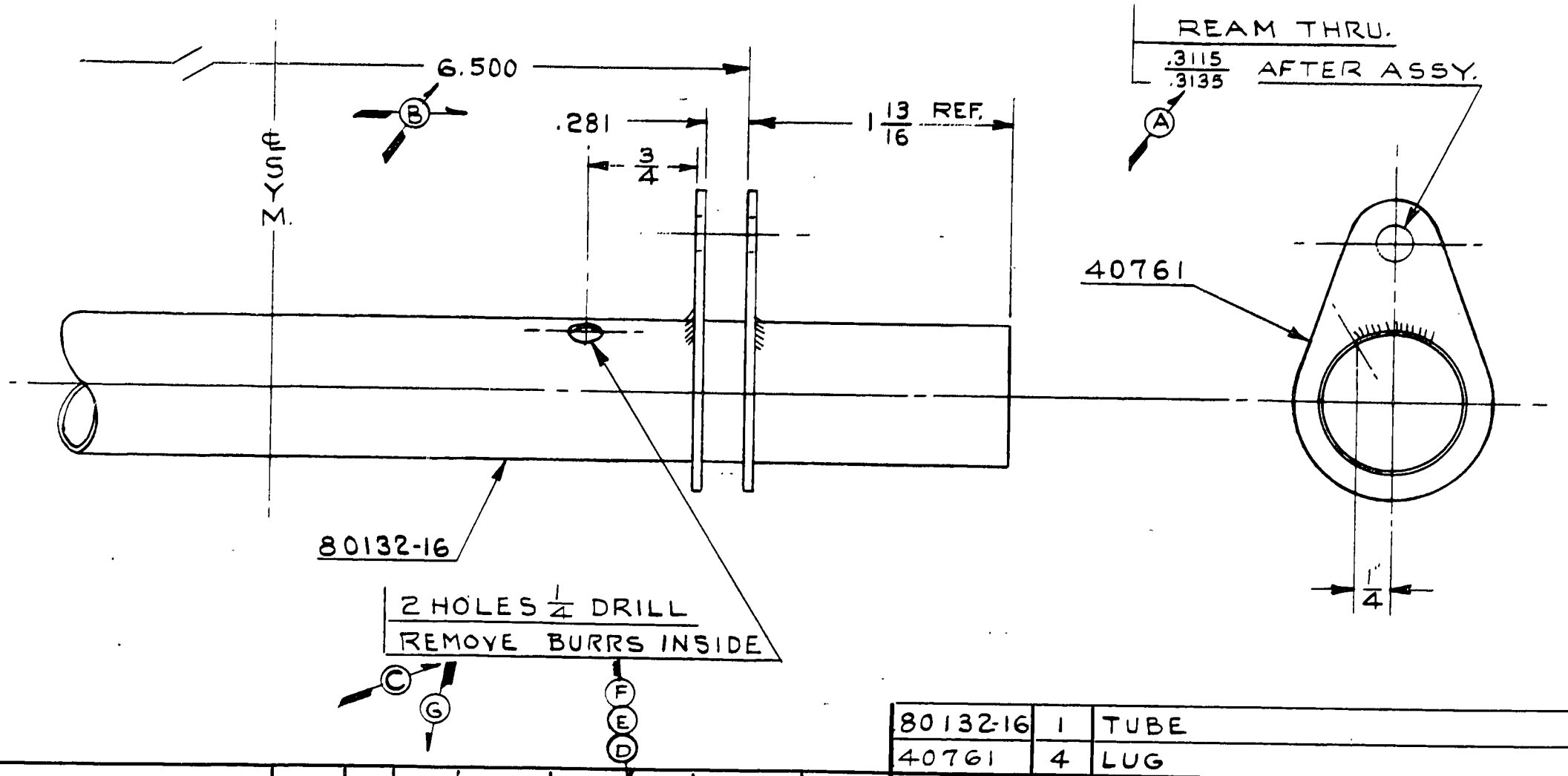

				MODEL	PER PLANE	NEXT ASSEMBLY	SUPERSEDES	SUP. BY
				J5 L4B	1	40813		
				J5C L4A	1	42664		
				L4A J3	1	42664		
				J5D HE-1	1	40813		
				TG-8	1	40813		
H	REDRAWN WITHOUT CHANGE	5-31-51	I.M.M.					
G	L-14 MODEL REF. ADDED	7-5-45	I.D.B.					
F	J5C NEXT ASSY. 42664 WAS 40813	12-21-43	I.D.B.					
E	J3 NEXT ASSY. 42664 WAS 40813	8-23-43	R.E.T.					
D	L-4A NEXT ASSY. 42664 WAS 40813	7-30-43	R.E.T.					
C	"REMOVE BURRS INSIDE" ADDED	4-16-43	C.K.					
B	6.500 WAS 6 1/2 · .281 WAS 9/32	3-25-43	C.E.K.					
A	.3115 / .3135 WAS .312 ± .002	3-25-43	C.E.K.					
LET	REVISION	DATE	BY					

THIS DRAWING IS THE PROPERTY OF THE PIPER AIRCRAFT CORP. AND ITS POSSESSION BY UNAUTHORIZED PERSONS SHALL NOT BE CONSTRUED AS PERMISSION TO REPRODUCE FOR SALE IN WHOLE OR IN PART ANY DEVICES SHOWN THEREON.

PIPER AIRCRAFT CORP.
LOCK HAVEN, PENNA.

PART NO.	NO. REQ.	NAME / MATERIAL
80132-16	1	TUBE
40761	4	LUG

SCALE FULL SIZE | TOTAL WT.—LBS.
FINISH—PIPER SPECIFICATION # 10
MANUFACTURING PRACTICES—PIPER SPECIFICATION # 9

LINK ASSEMBLY— STABILIZER ADJUSTMENT

DRAFTSMAN	CHECKER	STANDARDS	
W.N. EMERY 10-14-41	R-C.M. 11-6-41		40771

297

A297

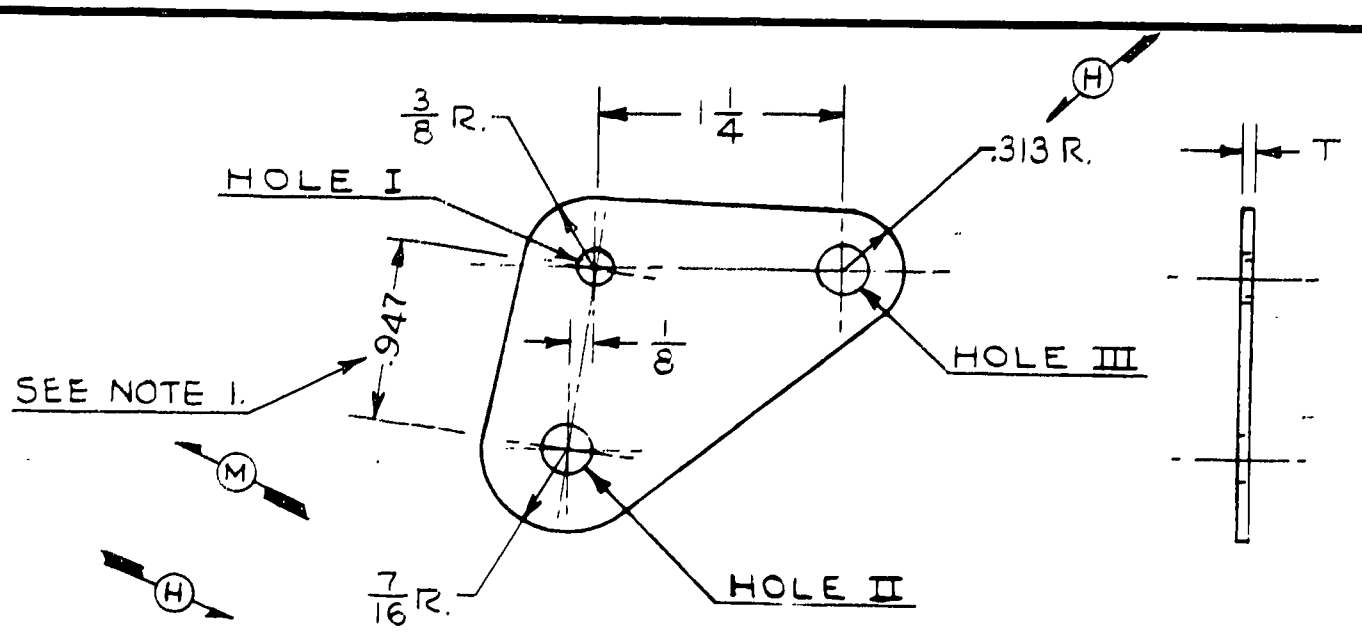

PART NO.	HOLE I	HOLE II	HOLE III	T	MATERIAL	MODEL	PER SHIP	NEXT ASS'Y.	WAS PART
40821-2	.249/.255	.374/.380	.249/.255	.125	#1025 STEEL	J4	1	D450-F	430
40821-3	.166	.166	.249/.255	.032	3S-1/2 H. ALUM.	J5, J5D, L-4B, T6-8, J5C, L-4A, J3	2	40813, 42664	4225
40821-4	.189/.195	.380/.390	.189/.195	.125	#1025 STEEL	J3, L-4A, L-4B, T6-8	1	41195	J3-408

J

K L N

NOTE: 1.
HOLE CENTERS WHERE "SEE NOTE 1" IS INDICATED SHALL COINCIDE WITH RELATED HOLE CENTERS IN 40551 (FOR 40821-4 ONLY)

M

LET	REVISION	DATE	BY
Q	REDRAWN WITHOUT CHANGE	6-20-51	I.M.M.
N	J5C NEXT ASS'Y. 42664 WAS 40813 FOR-3	12-22-43	I.D.B.
M	NOTE 1 ADDED	11-13-43	L.R.
L	J3 NEXT ASS'Y 42664 WAS 40813 FOR-3	8-23-43	R.E.T.
K	L-4A NEXT ASS'Y 42664 WAS 40813 FOR-3	7-30-43	R.E.T.
J	ON-4 .380/.390 WAS .374/.380	7-13-43	C.E.K.
H	TOLERANCES REV.	4-16-43	C.K.
G	REDRAWN & REVISED	3-15-43	J.E.C.

MODEL	PER PLANE	NEXT ASSEMBLY	SUPERSEDES	SUP. BY
NOTED	NOTED	NOTED		

THIS DRAWING IS THE PROPERTY OF THE PIPER AIRCRAFT CORP. AND ITS POSSESSION BY UNAUTHORIZED PERSONS SHALL NOT BE CONSTRUED AS PERMISSION TO REPRODUCE FOR SALE IN WHOLE OR IN PART ANY DEVICES SHOWN THEREON.

PIPER AIRCRAFT CORP.
LOCK HAVEN, PENNA.

PART NO.	NO. REQ.	MATERIAL
		NOTED

SCALE FULL SIZE | TOTAL WT.—LBS.

FINISH—PIPER SPECIFICATION # 10

MANUFACTURING PRACTICES—PIPER SPECIFICATION # 9

FITTING — ELEVATOR HORN & STABILIZER INDICATOR PULLEY

DRAFTSMAN	CHECKER	STANDARDS
CROWLEY 3-15-42	L. E. K. 4-2-43	

40821

298

A 298

WAS J3-40
J3-A40

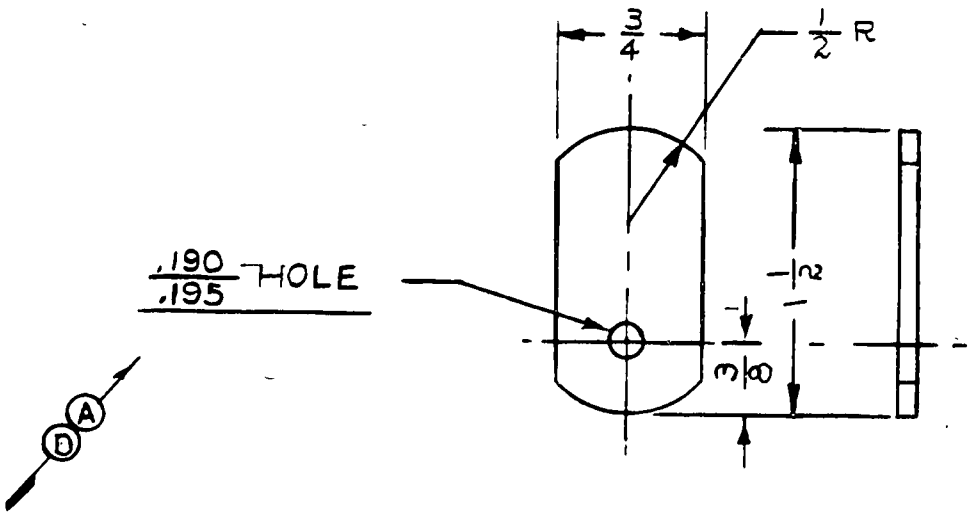

LIMITS, SHOP PRACTICES AND FINISH. UNLESS OTHERWISE NOTED, TO BE IN ACCORDANCE WITH PIPER SPECIFICATIONS #9 AND #10.

LET	REVISION	DATE	BY
E	REDRAWN WITHOUT CHANGE	4-27-44	V.R.
D	.190/.195 WAS .193/.190	9-3-43	F.J.D.
C	TG-8 WAS 2 PER SHIP	3-16-43	C.E.K.
B	4 WAS 2 ON J3, J5, J5C, J5D, L-4A	3-16-43	C.E.K.
A	.193/.190 WAS * 11 DRILL	3-5-43	J.E.C.

MODEL	PER SHIP	NEXT ASSEMBLY	SUPERSEDES	SUP. BY
TG-8	6	40842		
L-4B	4	40842		
HE-1	2	40842		
L-4A	4	40842		
J5/J5C	4	40842		
J3	4	40842		
J5D	4	40842		

PIPER AIRCRAFT CORP.
LOCK HAVEN, PENNA.

PART No.	No. REQ.	SIZE	DESCRIPTION / MATERIAL
		.095 x 3/4 x 1 1/2	* 1025 STEEL

SCALE FULL SIZE | TOTAL WT. - LBS.
FINISH

LUG — CABLE ATTACHMENT

DRAWN	CHECKED	APPROVED
W.H.Q. 10-16-41	W.N.E. 10-16-41	

40831

299

A 299

WAS J3-40
J3-A40

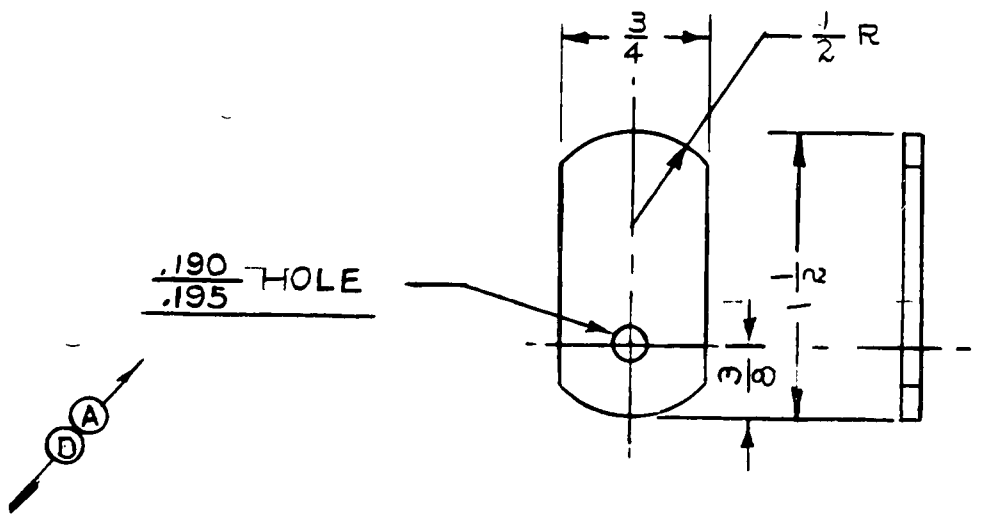

PART NO.	NO. REQ.	SIZE	DESCRIPTION / MATERIAL
		.095 x 3/4 x 1 1/2	#1025 STEEL

SCALE FULL SIZE — TOTAL WT.- LBS.
FINISH

LUG — CABLE ATTACHMENT

MODEL	PER SHIP	NEXT ASSEMBLY	SUPERSEDES	SUP. BY
TG-8	6	40842		
L-4B	4	40842		
J5-1	2	40842		
L-4A	4	40842		
J5, J5C	4	40842		
J3	4	40842		
J5D	4	40842		

LET.	REVISION	DATE	BY
E	REDRAWN WITHOUT CHANGE	4-27-44	V.P.
D	.190/.195 WAS .193/.190	9-3-43	F.J.D.
C	TG-8 WAS 2 PER SHIP	3-16-43	C.E.K.
B	4 WAS 2 ON J3, J5, J5C, J5D, L-4A	3-16-43	C.E.K.
A	.193/.190 WAS #11 DRILL	3-5-43	J.F.C.

PIPER AIRCRAFT CORP.
LOCK HAVEN, PENNA.

W.H.O.	W.N.E.	
10-16-41	10-16-41	
DRAWN	CHECKED	APPROVED

40831

LIMITS, SHOP PRACTICES AND FINISH, UNLESS OTHERWISE NOTED, TO BE IN ACCORDANCE WITH PIPER SPECIFICATIONS #9 AND #10.

299

A300

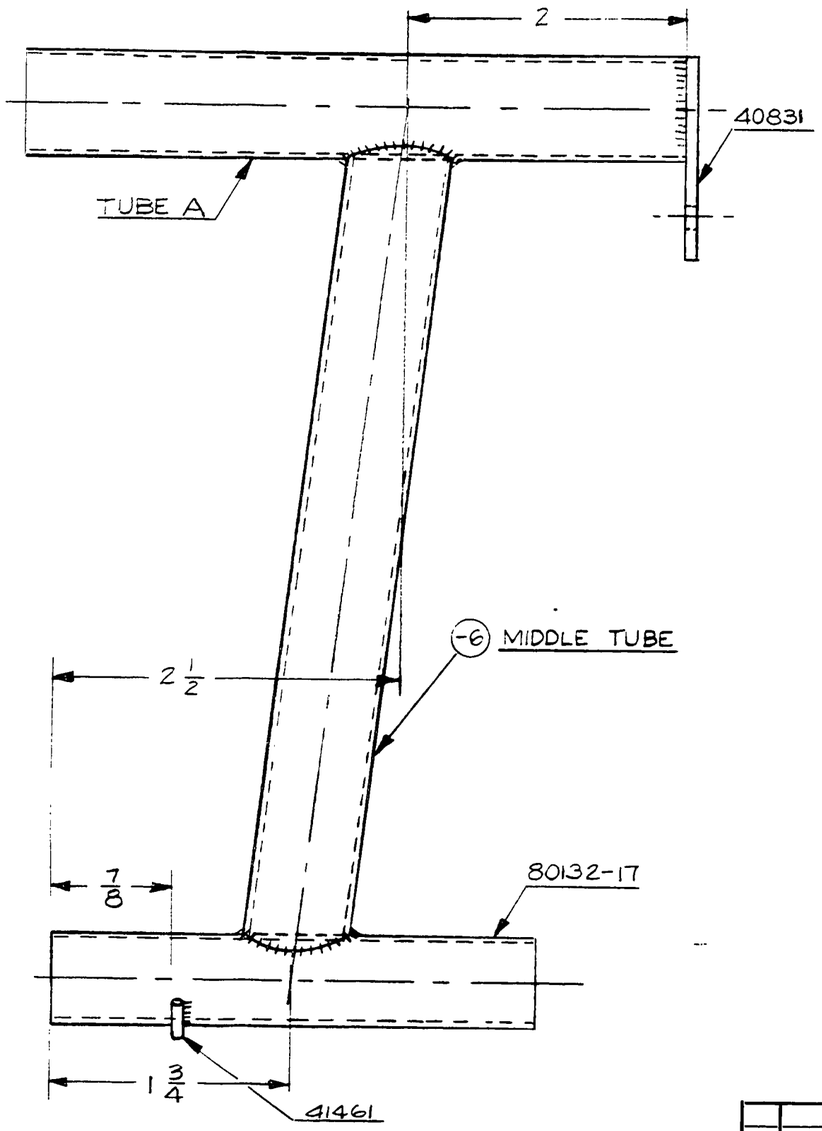

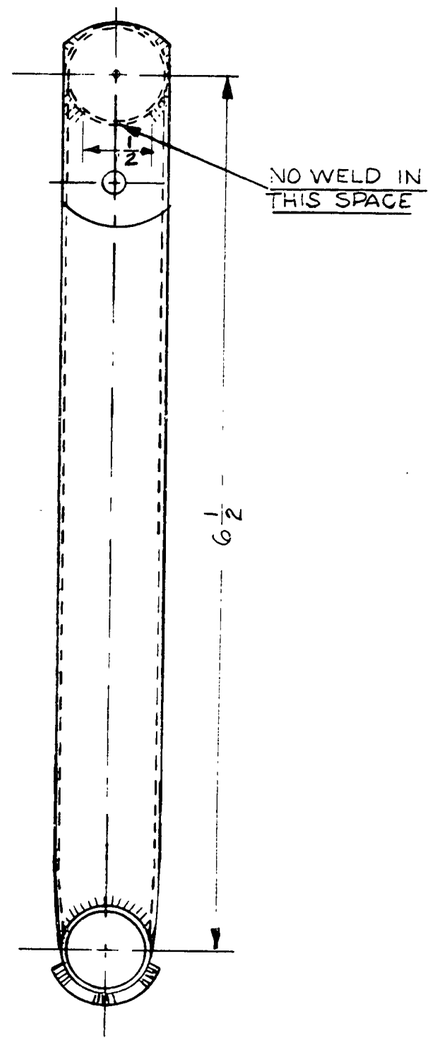

PART NO.	TUBE A	REMARKS	MODEL	PER SHIP	NEXT ASSEMBLY
40842-2	80132-18	SHOWN	J5, J5D	2	40952, 41382
			J5C	2	43023
			HE-1	1	40952
40842-3	80132-18	BEARING STOP ON OPP. END OF BEARING TUBE	J5, J5D	2	40952, 41382
			J5C	2	43023
			HE-1	1	40952
40842-4	80132-39	SHOWN	L-4A, J3	2	42883, 42462
			L-4B	2	40952, 41382
			T-G-B	3	40952, 41382, 42213
40842-5	80132-39	BEARING STOP ON OPP. END OF BEARING TUBE	L-4A, J3	2	42883, 42462
			L-4B	2	40952, 41382
			T-G-B	3	40952, 41382, 42213

F G H

LET	REVISION	DATE	BY
J	REDRAWN WITHOUT CHNG.	6-21-51	C.B.
H	J5C NEXT ASSY. 43023 WAS 40952 & 41382 FOR 2	12-29-43	R.E.T.
G	J3 NEXT ASSY. 42883 WAS 40952 & 41382	8-24-43	I.D.B
F	L-4A NEXT ASSY. 42883 WAS 40952 & 41382	5-6-43	RET.
E	REDRAWN & REVISED	3-10-43	C.K.

NOTED MODEL	NOTED PER PLANE	NOTED NEXT ASSEMBLY	SUPERSEDES	SUP. BY

THIS DRAWING IS THE PROPERTY OF THE PIPER AIRCRAFT CORP. AND ITS POSSESSION BY UNAUTHORIZED PERSONS SHALL NOT BE CONSTRUED AS PERMISSION TO REPRODUCE FOR SALE IN WHOLE OR IN PART ANY DEVICES SHOWN THEREON.

PIPER AIRCRAFT CORP.
LOCK HAVEN, PENNA.

PART NO.	NO. REQ.	SIZE	DESCRIPTION
40831	1		LUG
80132-18 / 80132-39	1		TOP TUBE
41461	1		STOP
80132-17	1		BEARING TUBE
-6	1	3/4 x .035 x 6 5/8	#1025 STEEL

MATERIAL

SCALE FULL SIZE | TOTAL WT.—LBS.

FINISH—PIPER SPECIFICATION # 10

MANUFACTURING PRACTICES—PIPER SPECIFICATION # 9

PEDAL ASSEMBLY—RUDDER

DRAFTSMAN	CHECKER	STANDARDS
C.K 3-10-43	L.E.K. 3-20-43	

40842

637

A639

WAS A4059, 4242, 4240 / D4262-A

D

D

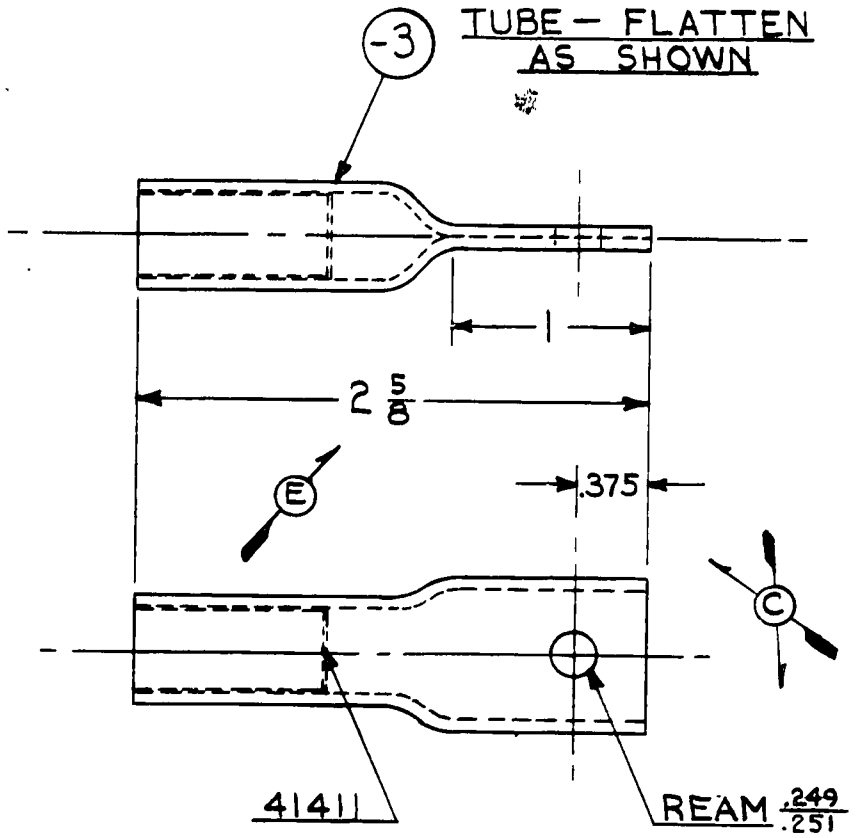

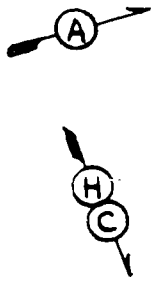

NOTE 1:
CONTACTING SURFACES OF PLUG & TUBE TO BE ZINC CHROMATED & ASSEMBLED WET.

NOTE 2:
PLUG TO BE PRESS FIT IN TUBE.

F — LIMITS, SHOP PRACTICES AND FINISH, UNLESS OTHERWISE NOTED, TO BE IN ACCORDANCE WITH PIPER SPECIFICATIONS. #9 AND #10.

G

LET	REVISION	DATE	BY
J	REDRAWN WITHOUT CHANGE	4-27-44	R.D.R.
H	ZINC ADDED TO NOTE 1	11-29-43	I.D.B.
G	TITLE REVISED	8-12-43	R.R.F.
F	NO. PER SHIP J3, L-4A, J5C 3 WAS 1	8-12-43	R.R.F.
E	2⅝ WAS 2⅜	8-12-43	R.R.F.
D	DOWEL DETAIL REMOVED	5-5-43	I.D.B.
C	DIM'S. & NOTES REVISED	5-5-43	I.D.B.
B	"ASS'Y." ADDED TO TITLE	10-8-42	C.E.K.
A	41411 WAS 40251-3	1-27-42	R.R.B.

MODEL	PER SHIP	NEXT ASSEMBLY	SUPERSEDES	SUP. BY
J3, L-4A	3	40261, 40901		
HE-1	1	40901		
J5C	3	40261, 40901		
J5, J5D	1	40901		
L-4B, TG-8	1	40901		

PIPER AIRCRAFT CORP.
LOCK HAVEN, PENNA.

PART NO.	No. REQ.	SIZE	MATERIAL
41411	1	DOWEL	
-3	1	9/16 x .065 x 2 11/16	#1025 ST. TUBE
~~-2~~	~~1~~	~~NOTED~~	~~WOOD~~

SCALE FULL SIZE — TOTAL WT. - LBS.
FINISH

FITTING ASS'Y – CONTROL TUBE

DRAWN	CHECKED	APPROVED
W.N. EMERY 10-16-41	R.C.M. 11-3-41	

40861

300

A300

WAS 4076
D4062-A

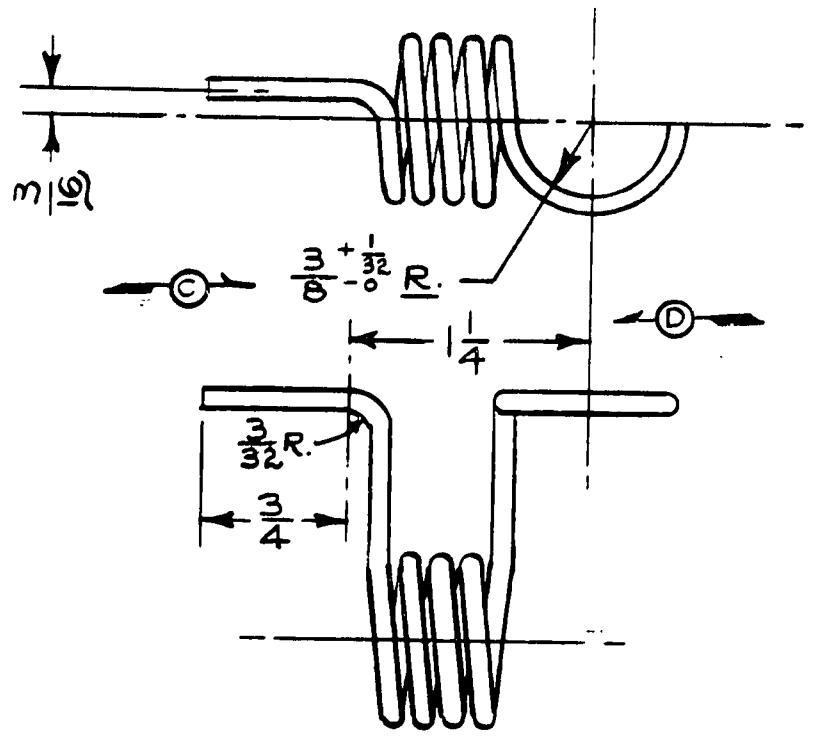

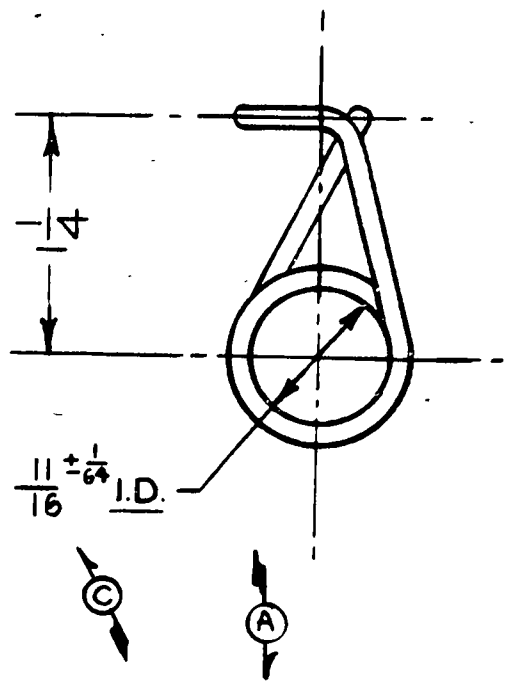

D

NOTE:
ALL BEND RADII 3/32,
UNLESS NOTED.

F E B LIMITS, SHOP PRACTICES AND FINISH. UNLESS OTHERWISE NOTED, TO BE IN ACCORDANCE WITH PIPER SPECIFICATIONS #9 AND #10.

LET.	REVISION	DATE	BY
G	REDRAWN WITHOUT CHANGE	4-27-44	I.D.B.
F	J5C NEXT ASSY. 43023 WAS 41382 & 40952	12-14-43	R.E.T.
E	J3 NEXT ASSY. 42883 WAS 41382 & 40952	8-24-43	I.D.B.
D	NOTE & 1 1/4 DIM. ADDED	5-6-43	R.E.T.
C	TOLERANCES ADDED	5-6-43	R.E.T.
B	L-4A NEXT ASSY. 42883 WAS 41382 & 40952	5-5-43	R.E.T.
A	.094 WAS .090	11-16-42	R.E.S.

MODEL	PER SHIP	NEXT ASSEMBLY	SUPERSEDES	SUP. BY
J3	4	42883, 42472		
TG-8	5	40552, 41382		
L-4B	4	41382, 40952		
HE-1	2	40952		
L-4A	4	42883		
J5C	4	43023		
J5, J5D	4	41382, 40952		

PIPER AIRCRAFT CORP.
LOCK HAVEN, PENNA.

PART No.	No. REQ.	SIZE	MATERIAL
		.094 x NOTED	MUSIC WIRE

SCALE FULL SIZE | TOTAL WT. - LBS.
FINISH

SPRING – RUDDER PEDAL TORSION

DRAWN	CHECKED	APPROVED
W.N. Emery 10-20-41	R.C.M. 10-30-41	

40941

301

A301

WAS J2-800 / D4341-A

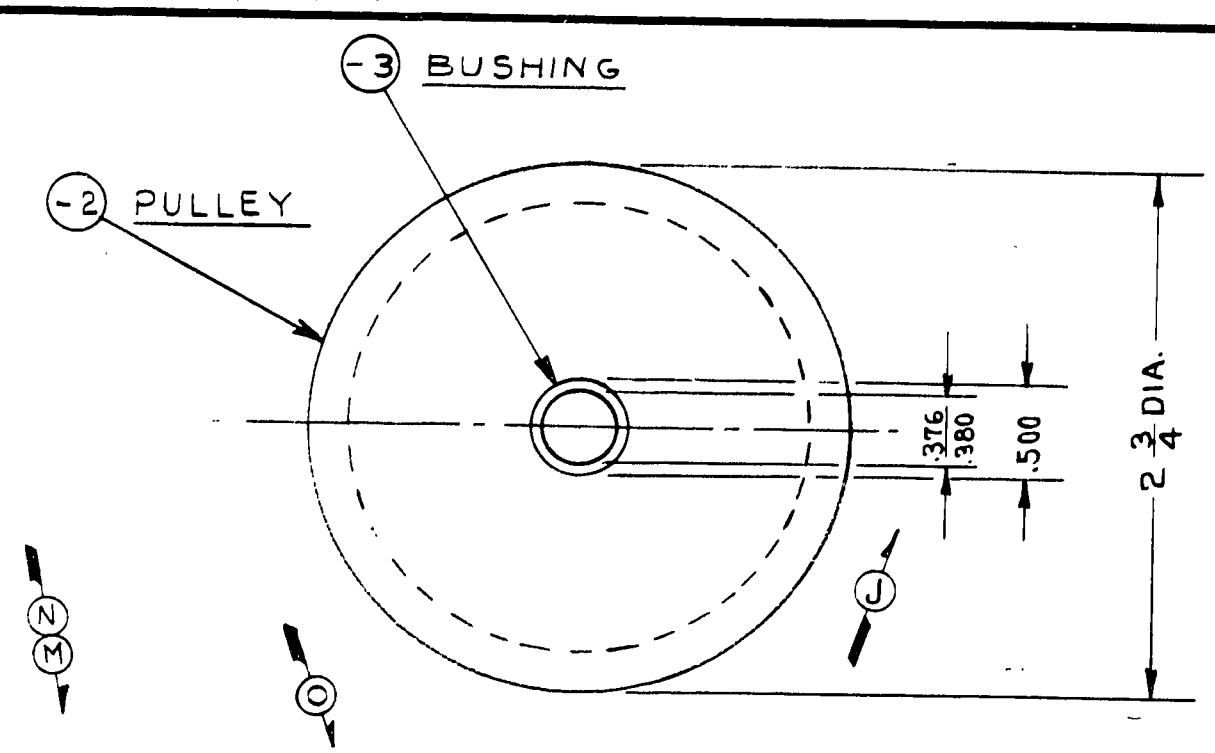

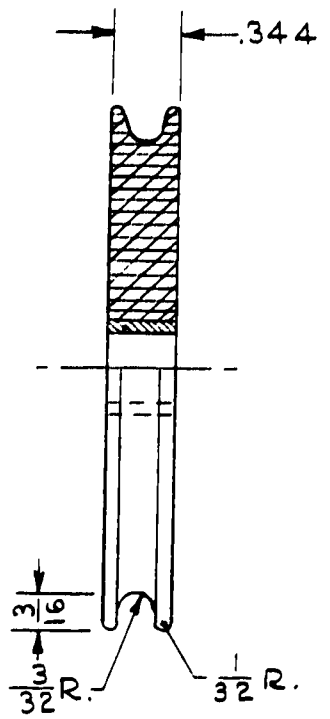

MODEL	PER SHIP.	NEXT ASSEMBLY
J5, J5D	7	41021, 41062, 41091, 41171
J3, L-4A, L-4B, TG-8	5	12953, 13395, 41171, 14483
HE-1	7	41062, 41091, 41171, 42392
J5C	6	43012, 24186
L-14	2	20398

K L

NOTE: BUSHING TO BE PRESS FIT IN PULLEY.

PARTS MARKED THUS Δ ALSO ON 40681

H

PART NO.	NO. REQ.	SIZE	DESCRIPTION / MATERIAL
-3	1	.500 D. x .376/.381 I.D. x .344	BRONZE
-2	1	2 3/4 D. x .344	CANVAS BASE PHENOLIC

SCALE FULL SIZE | TOTAL WT.—LBS.

FINISH—PIPER SPECIFICATION # 10

MANUFACTURING PRACTICES—PIPER SPECIFICATION # 9

LET	REVISION	DATE	BY
P	REDRAWN WITHOUT CHANGE	6-14-51	I.M.M.
O	N.A. 41171 REM: 6 PER SHIP FOR J5C WAS 7	1-30-46	D.A.W.
N	L-14 MODEL REF. CANCELED	6-27-45	E.L.N.
M	L-14 MODEL REF. ADDED	3-21-45	I.D.B.
L	J5C N.A. 24186 WAS 41062 & 41021	12-23-43	A.H.
K	J5C N.A. 43012 WAS 41091	12-6-43	J.C.
J	.376/.380 WAS .375/.380	10-7-43	W.C.T.
H	NEXT ASSY. 40681 ADDED FOR -2	8-7-43	C.E.K.
G	REDRAWN & REVISED	8-3-43	J.E.C.

NOTED: MODEL | PER PLANE | NEXT ASSEMBLY | SUPERSEDES | SUP. BY

THIS DRAWING IS THE PROPERTY OF THE PIPER AIRCRAFT CORP. AND ITS POSSESSION BY UNAUTHORIZED PERSONS SHALL NOT BE CONSTRUED AS PERMISSION TO REPRODUCE FOR SALE IN WHOLE OR IN PART ANY DEVICES SHOWN THEREON.

PIPER AIRCRAFT CORP.
LOCK HAVEN, PENNA.

PULLEY ASSEMBLY

DRAFTSMAN	CHECKER	STANDARDS
CROWLEY 8-3-43	P.R.R. 8-3-43	

40991

302

A302

WAS A479 / D4115-A

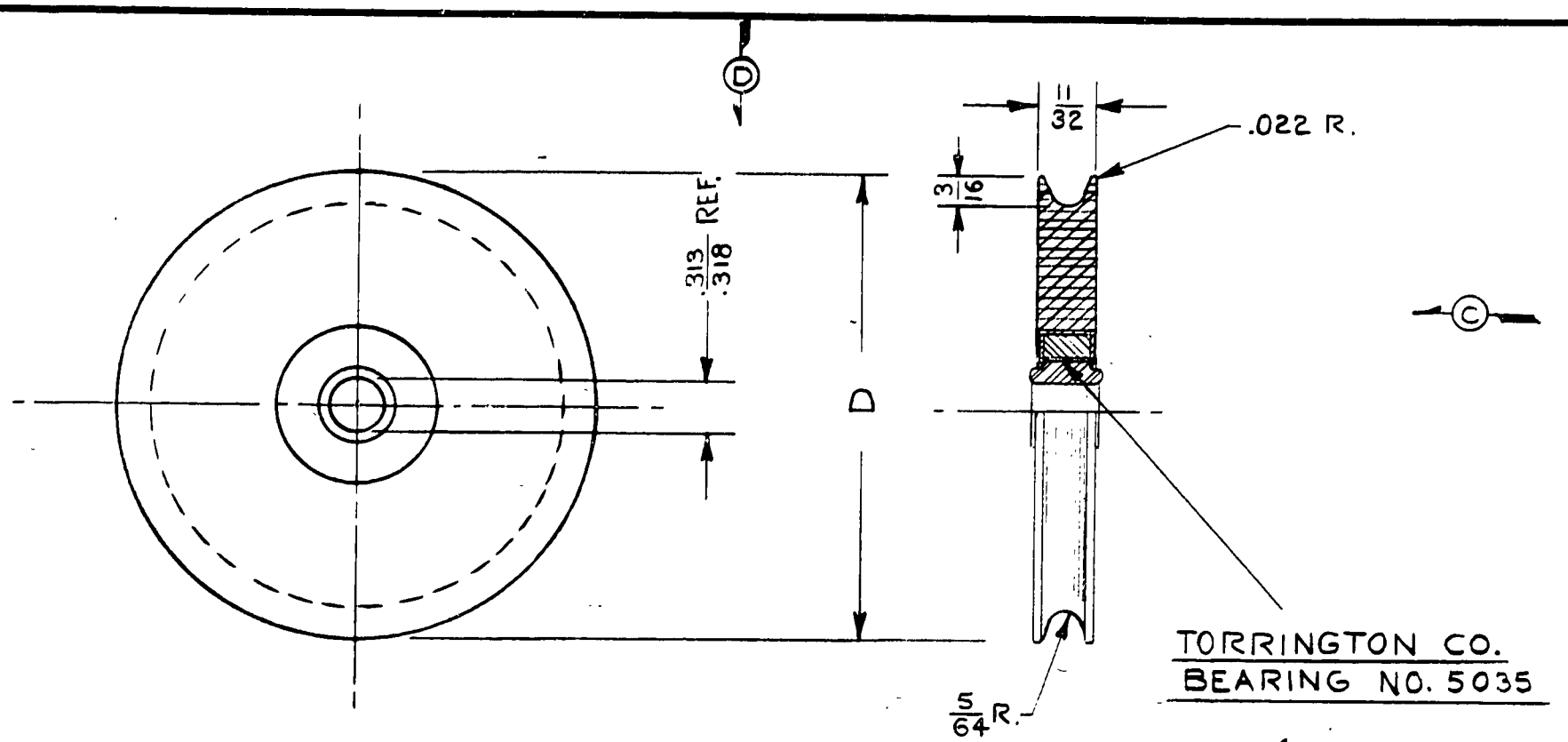

ASSY. NO.	D
41001	2 3/4
41001-2	2 1/2

E B F A F

				L14	12	90600-91300		
L	REDRAWN WITHOUT CHANGE	5-31-51	I.M.H.	J5C	6	24186, 43012		
K	-2 & TABLE ADDED	1-26-50	K.D.	HE-1	2	42392		
J	TITLE REVISED	9-2448	R.C.	J5D	2	41091		
	NICE BRG. # 6033 REM.					41062		
H	ALTERNATE BEARING ADDED	4-11-46	D.A.W.	J5	2	41021		
G	.906/.911 : .313/.305 : ⌀ .380/.375 REM.	4-11-46	D.A.W.	J4	4	D5264-F		
F	J5C N.A. 43012 ADDED. 6 REQ. WAS 4	1-30-46	D.A.W.	MODEL	PER PLANE	NEXT ASSEMBLY	SUPERSEDES	SUP. BY
E	L-14 MODEL REF. ADDED	7-5-45	I.D.B.					
D	.313/.318 WAS 5/16; .906/.911 WAS 29/32	1-28-44	A.I.N.					
C	.313/.305 WAS 5/16; .380/.373 WAS 3/8	1-20-44	A.I.N.					
B	J5C 4 PER SHIP WAS 2	12-24-43	A.H.					
A	J5C N.A. 24186 WAS 41062 & 41021	12-23-43	A.H.					
LET	REVISION	DATE	BY					

THIS DRAWING IS THE PROPERTY OF THE PIPER AIRCRAFT CORP. AND ITS POSSESSION BY UNAUTHORIZED PERSONS SHALL NOT BE CONSTRUED AS PERMISSION TO REPRODUCE FOR SALE IN WHOLE OR IN PART ANY DEVICES SHOWN THEREON.

PIPER AIRCRAFT CORP.
LOCK HAVEN, PENNA.

PART NO.	NO. REQ.	MATERIAL
		CANVAS BASE PHENOLIC

SCALE FULL SIZE | TOTAL WT.—LBS.

FINISH—PIPER SPECIFICATION # 10

MANUFACTURING PRACTICES—PIPER SPECIFICATION # 9

PULLEY — 2 3/4"

DRAFTSMAN	CHECKER	STANDARDS	
W.N. EMERY 10-22-41	R.C.M. 11-3-41		41001

303

A303

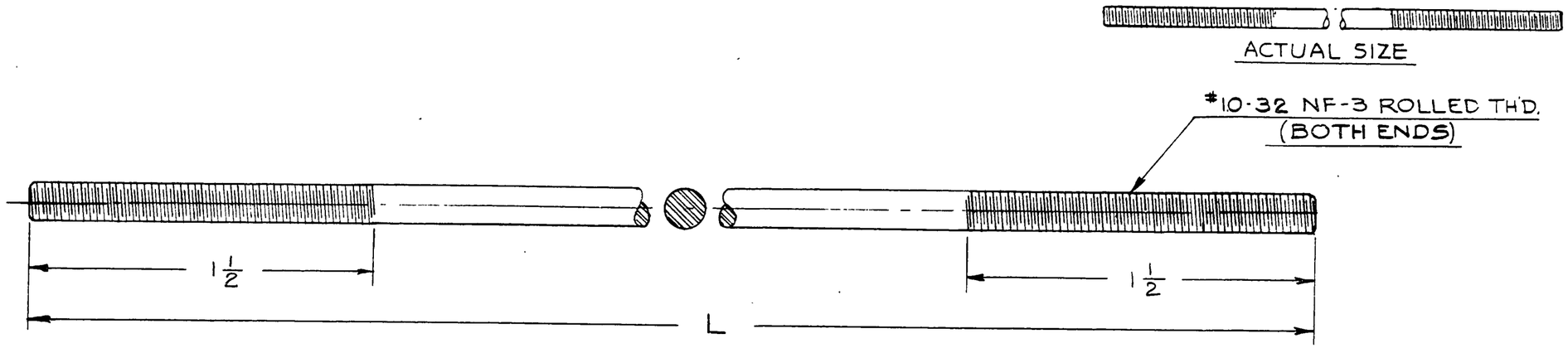

PART NO.	L	MODEL	PER PLANE	NEXT ASSEMBLY	WAS PART NO.
TOP. 41031-2	41 1/2	J3	2	10555	4094
BOTT. 41031-3	35	J3	2	10556	4095
41031-4	36 1/8				

LET.	REVISION	DATE	BY
L	IN B/M ST. STL. TYPE 302W WAS S.A.E. #3140 C.D. STL. CAD. PLATED	3-31-47	T.N.K.
K	IN B/M 140,000 P.S.I. WAS 145,000 P.S.I.	10-4-46	C.E.K.
J	REDRAWN & REVISED	8-29-46	C.E.K.

THIS DRAWING IS THE PROPERTY OF THE PIPER AIRCRAFT CORP. AND ITS POSSESSION BY UNAUTHORIZED PERSONS SHALL NOT BE CONSTRUED AS PERMISSION TO REPRODUCE FOR SALE, IN WHOLE OR IN PART, ANY DEVICES SHOWN THEREON.

MODEL	PER PLANE	NEXT ASSEMBLY	SUPERSEDES	SUP. BY
NOTED	NOTED	NOTED		

PIPER AIRCRAFT CORP.
LOCK HAVEN, PENNA.

PART NO.	No. REQ.	SIZE	DESCRIPTION
		.1695D. x NOTED	STAINLESS STEEL, TYPE 302W, MIN. U.T.S. 140,000 P.S.I.
			MATERIAL

SCALE TWICE SIZE & NOTED — TOTAL WT.—LBS.

FINISH—PIPER SPECIFICATION #10

MANUFACTURING PRACTICES—PIPER SPECIFICATION #9

WIRES - TAIL BRACE

DRAFTSMAN	CHECKER	STANDARDS
C.E.K. 8-29-46	R.E.T. 8-29-46	

41031

640

A640

WAS 4082
D4067-A

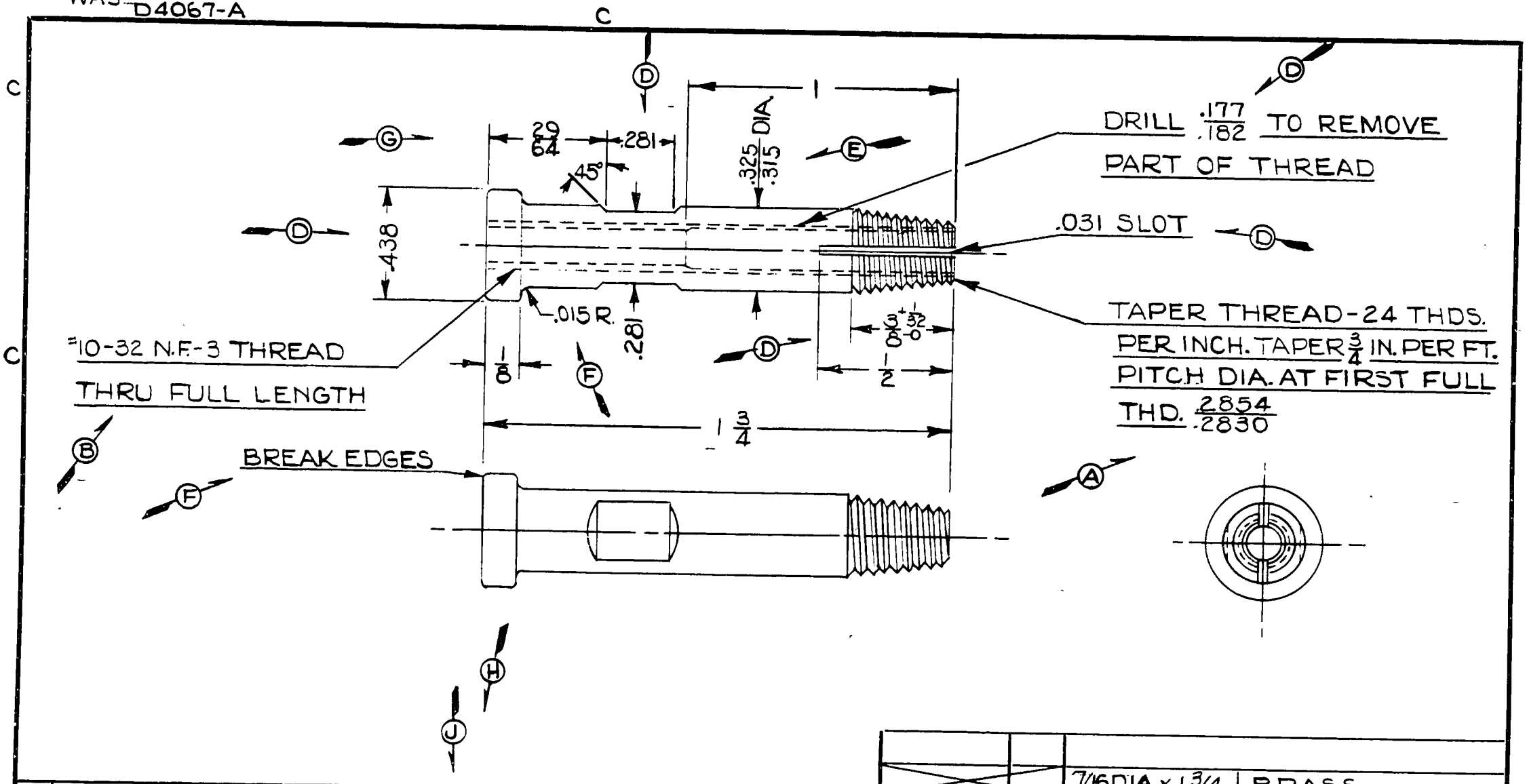

LET	REVISION	DATE	BY
L	REDRAWN WITHOUT CHANGE	6-19-51	L.E.M.
K	U3N.A.10555&10556 WAS 41195	4-5-46	L.R.
J	J5C MODEL REF. CAN.	9-25-45	I.M.M.
H	L-14 MODEL REF. ADDED	3-7-45	J.B.M.
G	DIMS. REVISED	9-4-43	F.J.D.
F	.015R & NOTE ADDED	7-31-43	C.E.K.
E	.329/.315 WAS .325	7-3-43	C.K.
D	TOLERANCES REVISED	5-12-43	C.K.
C	IV&8 3/4 DIM. REMOVED	3-22-43	C.E.K.
B	NF-3 SPEC. ADDED TO NOTE	3-20-43	C.E.K.
A	PITCH DIA. NOTE ADDED	3-20-43	C.E.K.

MODEL	PER PLANE	NEXT ASSEMBLY	SUPERSEDES	SUP. BY
L-14	8	90600		
J3	8	41195		
HE-1	8	41195		
J5D TO8	8	41195		
J5	8	10555,10556		
J5&J5C	8	41195		

THIS DRAWING IS THE PROPERTY OF THE PIPER AIRCRAFT CORP. AND ITS POSSESSION BY UNAUTHORIZED PERSONS SHALL NOT BE CONSTRUED AS PERMISSION TO REPRODUCE FOR SALE IN WHOLE OR IN PART ANY DEVICES SHOWN THEREON.

PIPER AIRCRAFT CORP.
LOCK HAVEN, PENNA.

PART NO.	NO. REQ.	SIZE	DESCRIPTION / MATERIAL
		7/16 DIA x 1 3/4	BRASS

SCALE FULL SIZE | TOTAL WT.—LBS.
FINISH—PIPER SPECIFICATION # 10
MANUFACTURING PRACTICES—PIPER SPECIFICATION # 9

NIPPLE-TIE ROD

DRAFTSMAN	CHECKER	STANDARDS
C.L.W. 10-23-41	W.N.E. 10-23-41	

41051

304

A304

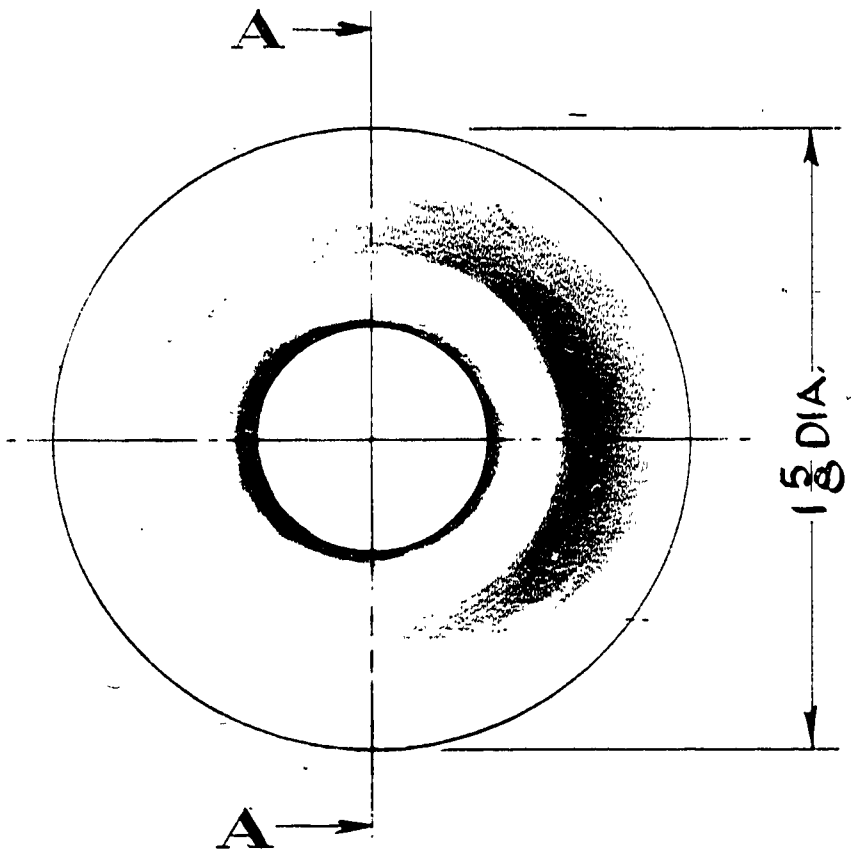

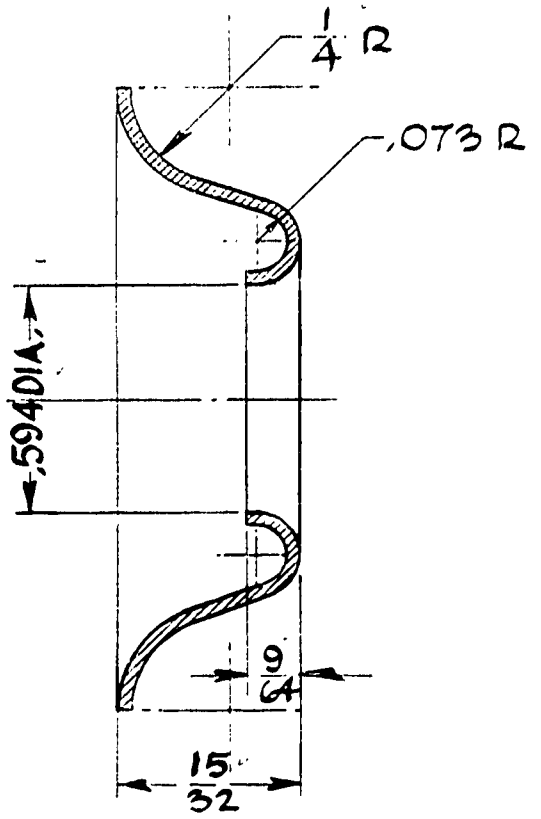

SECTION A-A

PART No.	No. REQ.	.032×2×2 SIZE	350 ALUM. DESCRIPTION
		MATERIAL	

SCALE TWICE SIZE | TOTAL WT.–LBS.

FINISH–PIPER SPECIFICATION #10

MANUFACTURING PRACTICES–PIPER SPECIFICATION #9

MODEL	PER PLANE	NEXT ASSEMBLY	SUPERSEDES	SUP. BY

THIS DRAWING IS THE PROPERTY OF THE PIPER AIRCRAFT CORP. AND ITS POSSESSION BY UNAUTHORIZED PERSONS SHALL NOT BE CONSTRUED AS PERMISSION TO REPRODUCE FOR SALE, IN WHOLE OR IN PART, ANY DEVICES SHOWN THEREON.

LET.	REVISION	DATE	BY
L	REDRAWN & REVISED	1-11-51	M.G.

PIPER AIRCRAFT CORP.
LOCK HAVEN, PENNA.

PLATE – STABILIZER ADJUSTMENT CRANK ESCUTCHEON

DRAFTSMAN	CHECKER	STANDARDS
M.W.G. 1-11-51	H. R. K. 1-16-51	

41101

305

A305

This page intentionally left blank.

WAS PART J3-87

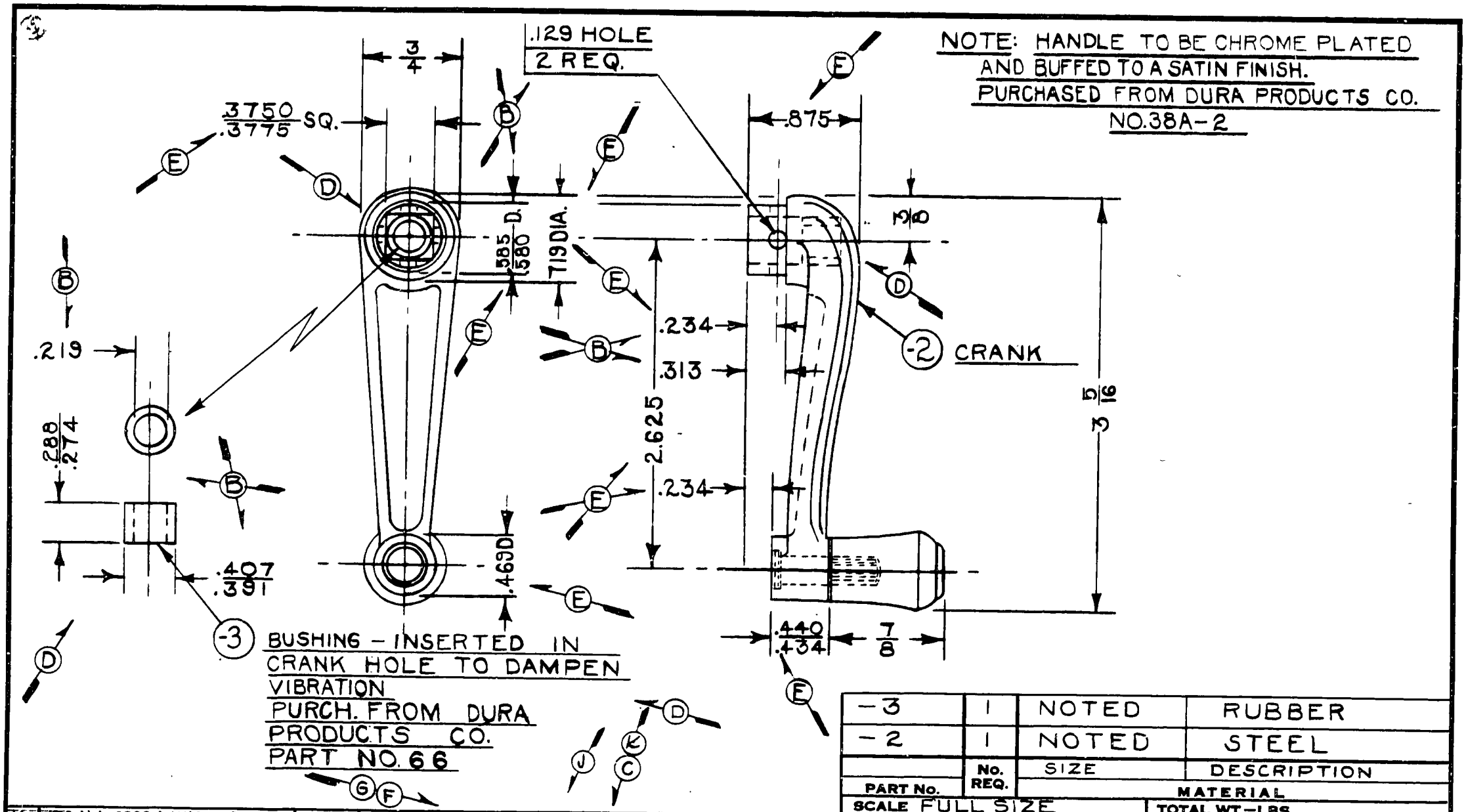

PART No.	No. REQ.	SIZE	DESCRIPTION
-3	1	NOTED	RUBBER
-2	1	NOTED	STEEL

MATERIAL

SCALE FULL SIZE — TOTAL WT.-LBS.

FINISH—PIPER SPECIFICATION #10

MANUFACTURING PRACTICES—PIPER SPECIFICATION #9

LET.	REVISION	DATE	BY	MODEL	PER PLANE	NEXT ASSEMBLY	SUPERSEDES	SUP. BY
K	J5C N.A. 23334 WAS 42902	11-5-45	L.R.	L-14	1	90600		
J	L-14 MODEL REF. ADDED	7-3-45	J.B.M.	J4				
H	REDRAWN WITHOUT CHANGE	10-10-44	H.M.Z.	T6-8	2	42122, 41182		
G	J5C NEXT ASSY. 42902 WAS 41182	12-14-43	J.E.C.	J5D, MEN	1	41182		
F	J3 NEXT ASSY. 24176 WAS 41182	10-7-43	M.G.S.	L4A, J5C	1	23334 42902		
E	DIM. REVISED	6-30-43	H.R.K.	J3	1	24176		
D	NOTE REV.-BUSH. ADDED	6-23-43	H.J.G.	J5, L4B	1	41182		
C	L-4A NEXT ASSY. 42902 WAS 41182	6-3-43	C.E.K.					
B	DIMENSIONS REVISED	5-11-43	C.E.K.					
A	7/32 WAS 1/4; 9/32 WAS 5/16; 25/64 WAS 3/8	3-8-43	J.E.C.					

PIPER AIRCRAFT CORP.
LOCK HAVEN, PENNA.

CRANK ASSEMBLY - STABILIZER ADJUSTMENT

DRAFTSMAN	CHECKER	STANDARDS
W. NEMERY	R. C. M.	
10-24-41	11-13-41	

41111

PENCILTEX A. & B. SMITH CO., PGH., PA.

306

A306

WAS A4011
D4181-A

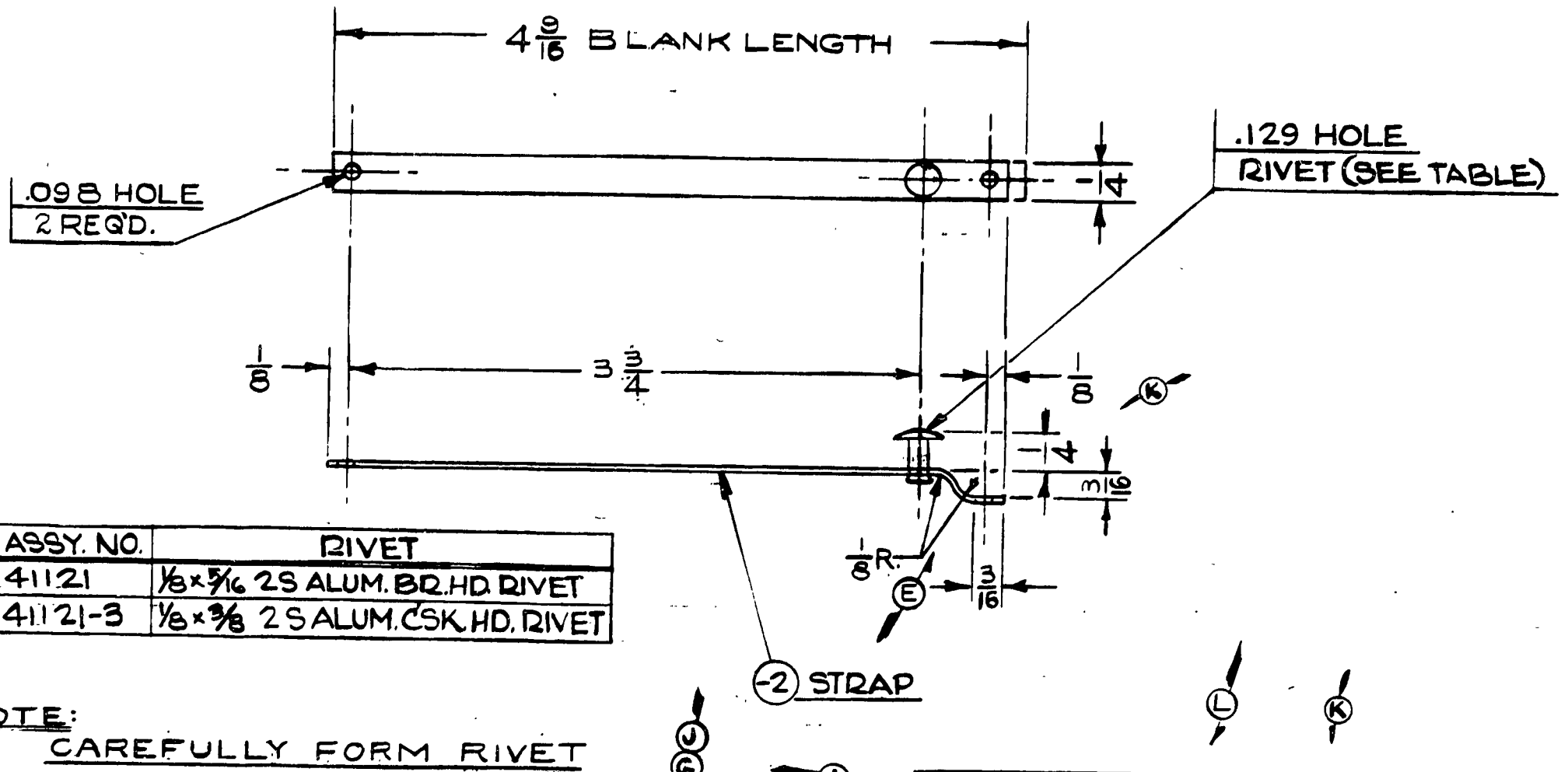

ASSY. NO.	RIVET
41121	1/8 x 5/16 2S ALUM. BR. HD. RIVET
41121-3	1/8 x 3/8 2S ALUM. CSK. HD. RIVET

NOTE:
CAREFULLY FORM RIVET
TO FIX IN POSITION SHOWN.

LET.	REVISION	DATE	BY
M	41121-3 ADDED	5-2-51	M.G.
L	RIVET WAS 1/8 x 3/8 CSK HD 2S ALUM	2-9-51	I.M.M
K	1/4 WAS 1/8; RIVET WAS 1/8 x 5/16 BR HD	5-27-46	RC
J	L-4 A N.A. 24266 WAS 23856	6-26-44	I.D.B.
H	REDRAWN WITHOUT CHANGE	4-20-44	V.P.
G	J5C N.A. 24186 WAS 41182	12-21-43	A.H.
F	L-4A NEXT ASSY. 23856 WAS 42902	11-26-43	L.R
E	1/8 R. ADDED	10-14-43	M.G.S.
D	J3 NEXT ASSY. 24146 WAS 41182	10-8-43	M.G.S.
C	L-4A NEXT ASSY. 42902 WAS 41182	6-3-43	C.E.K.
B	NOTE ADDED	5-11-43	R.R.F.
A	RIVET SPEC. REVISED	3-6-43	R.R.F.

MODEL	PER PLANE	NEXT ASSEMBLY	SUPERSEDES	SUP. BY
TG-8	2	42122, 41182		
L4B,S	1	41182		
J5C	1	41182		
L-4A	1	24266		
J5C	1	24186		
J3	1	24146		

PENCILTEX A. & B. SMITH CO., PGH., PA.

PIPER AIRCRAFT CORP.
LOCK HAVEN, PENNA.

PART No.	No. REQ.	SIZE	DESCRIPTION / MATERIAL
	1		RIVET (SEE TABLE)
-2	1	.032 x 1/4 x 4 9/16	*1025 STEEL

SCALE FULL SIZE — TOTAL WT.—LBS.
FINISH—PIPER SPECIFICATION #10
MANUFACTURING PRACTICES—PIPER SPECIFICATION #9

INDICATOR ASSEMBLY—STABILIZER

DRAFTSMAN	CHECKER	STANDARDS
V.N. Emery 10-24-41	R.C.M. 10-30-41	

41121

307

A307

WAS 4021
D4023-A

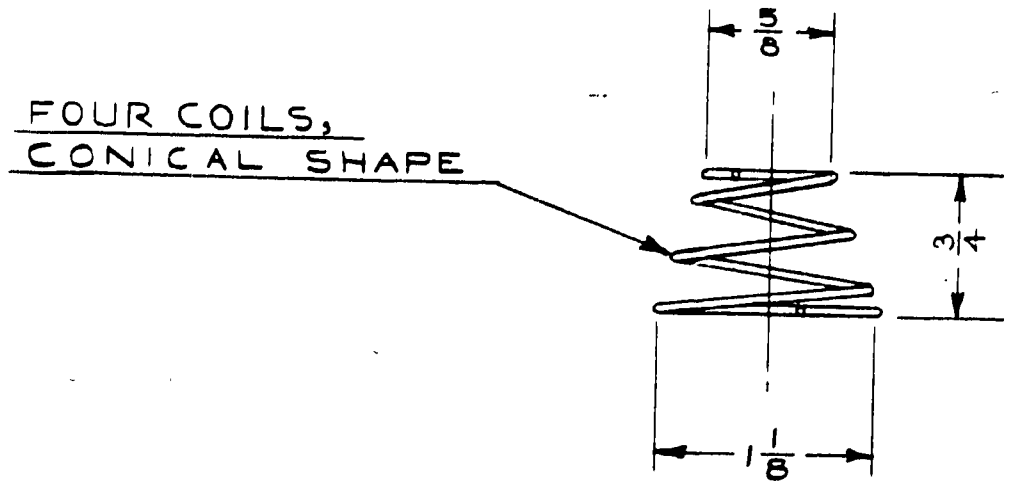

NOTES

LENGTH: 3/4 EXTENDED — 1/8 COMPRESSED
MATERIAL: #21 GA. (.047") SPRING WIRE (AM.S.E W.CO. MUSIC WIRE GAUGE)

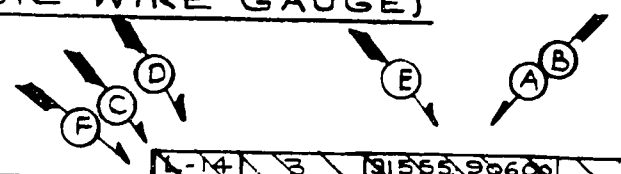

L-14	3	91555, 90600	
J3	1	24176	
J4	1		
HE-1, J5D	1	41182	
L-4A, J5C	1	89334, 42902	
TG-8	2	42122, 41182	
J5	1		
L-4B	1	41182	
MODEL	PER PLANE	NEXT ASSEMBLY	SUPERSEDES / SUP. BY

LET	REVISION	DATE	BY
G	REDRAWN WITHOUT CHANGE	5-31-51	I.M.M.
F	J5C N.A. 23334 WAS 42902	11-5-45	L.R.
E	L-14 NEXT ASSY. 91555 WAS 90994	7-12-45	C.E.K.
D	L-14 MODEL REF. ADDED	6-14-45	J.B.M.
C	J5C NEXT ASSY. 42902 WAS 41182	12-14-43	J.E.C.
B	J3 NEXT ASSY 24176 WAS 41182	10-7-43	M.G.S.
A	L-4A NEXT ASSY. 42902 WAS 41182	6-3-43	C.E.K.

THIS DRAWING IS THE PROPERTY OF THE PIPER AIRCRAFT CORP. AND ITS POSSESSION BY UNAUTHORIZED PERSONS SHALL NOT BE CONSTRUED AS PERMISSION TO REPRODUCE FOR SALE IN WHOLE OR IN PART ANY DEVICES SHOWN THEREON.

PIPER AIRCRAFT CORP.
LOCK HAVEN, PENNA.

	NOTED	NOTED
PART NO.	SIZE	DESCRIPTION
NO. REQ.	MATERIAL	

SCALE FULL SIZE | TOTAL WT.—LBS.
FINISH—PIPER SPECIFICATION # 10
MANUFACTURING PRACTICES—PIPER SPECIFICATION # 9

SPRING—STABILIZER CRANK ESCUTCHEON PLATE

W.N.EMERY	R.C.M.		41151
10-24-41	11-5-41		
DRAFTSMAN	CHECKER	STANDARDS	

308

A308

WAS J3-424

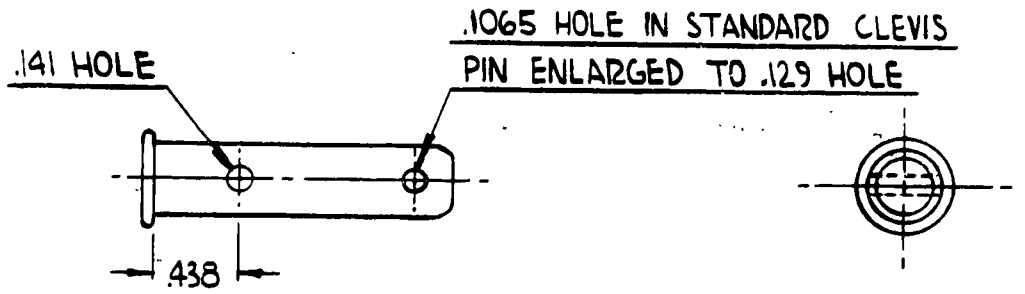

NOTE:

STANDARD AN 396-41 CLEVIS PIN
REWORKED AS SHOWN

THIS DRAWING IS THE PROPERTY OF THE PIPER AIRCRAFT CORP. AND ITS POSSESSION BY UNAUTHORIZED PERSONS SHALL NOT BE CONSTRUED AS PERMISSION TO REPRODUCE FOR SALE, IN WHOLE OR IN PART, ANY DEVICES SHOWN THEREON.

MODEL	PER PLANE	NEXT ASSEMBLY	SUPERSEDES	SUP. BY
J5C	1	24166		
J5	1	24146		

LET.	REVISION	DATE	BY
M	REDRAWN & REVISED	3-20-46	L.R.

PENCILTEX A. & B. SMITH CO., PGH., PA.

PIPER AIRCRAFT CORP.
LOCK HAVEN, PENNA.

		NOTED
PART No.	No. REQ.	MATERIAL
SCALE FULL SIZE		TOTAL WT.—LBS.
FINISH—PIPER SPECIFICATION #10		
MANUFACTURING PRACTICES—PIPER SPECIFICATION #9		

PIN - STABILIZER ADJUSTMENT CRANK

DRAFTSMAN	CHECKER	STANDARDS
L.R. 3-20-46	C.E.T. 3-22-46	

41161

309

A309

WAS J3-436

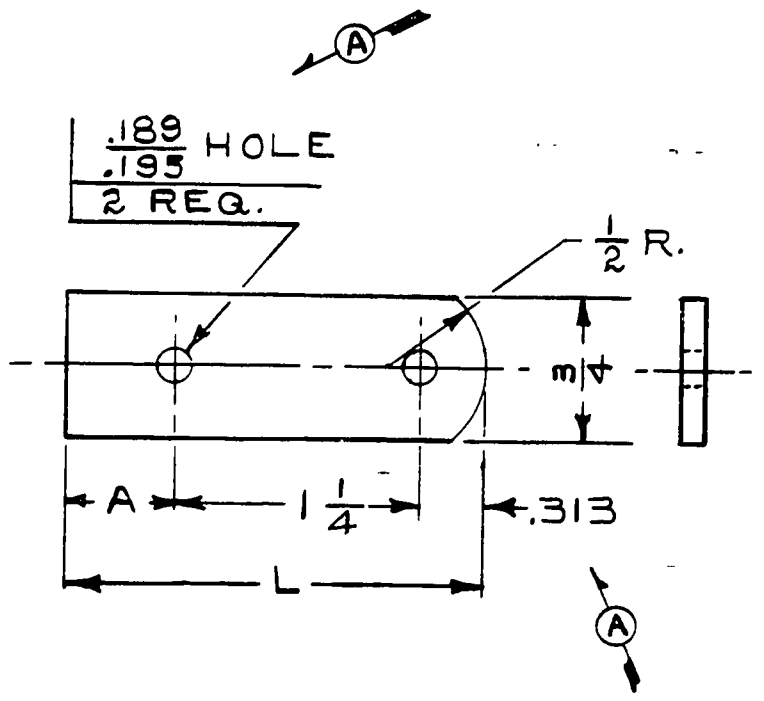

PART NO.	L	A
41271	2 1/8	9/16
© 41271-2	2 1/2	15/16
41271-3	2 7/16	7/8

		.125 x 3/4 x NOTED	#1025 STEEL
PART No.	No. REQ.	SIZE	DESCRIPTION
		MATERIAL	
SCALE FULL SIZE		TOTAL WT.—LBS.	

FINISH—PIPER SPECIFICATION #10

MANUFACTURING PRACTICES—PIPER SPECIFICATION #9

MODEL	PER PLANE	NEXT ASSEMBLY	SUPERSEDES	SUP. BY
J3C-65	1	41195		
J4B	1	41195		
J4A	1	41195		
J3	1	41195		

LET.	REVISION	DATE	BY
D	2½ WAS 2 9/16, 15/16 WAS 1 ON -2	12-6-50	HRK
C	-2 & -3 ADDED	3-21-49	RM
B	REDRAWN WITHOUT CHANGE	4-24-44	V.P.
A	DIMENSIONS REVISED	5-11-43	C.E.K.

PENCILTFX A. & B. SMITH CO., PGH., PA.

PIPER AIRCRAFT CORP.
LOCK HAVEN, PENNA.

LINK — ELEVATOR HORN LOWER

DRAFTSMAN	CHECKER	STANDARDS
11-10-41	R.C.M.	
W.E.S.	11-10-41	

41271

310

A310

WAS A1010 / D1168-A

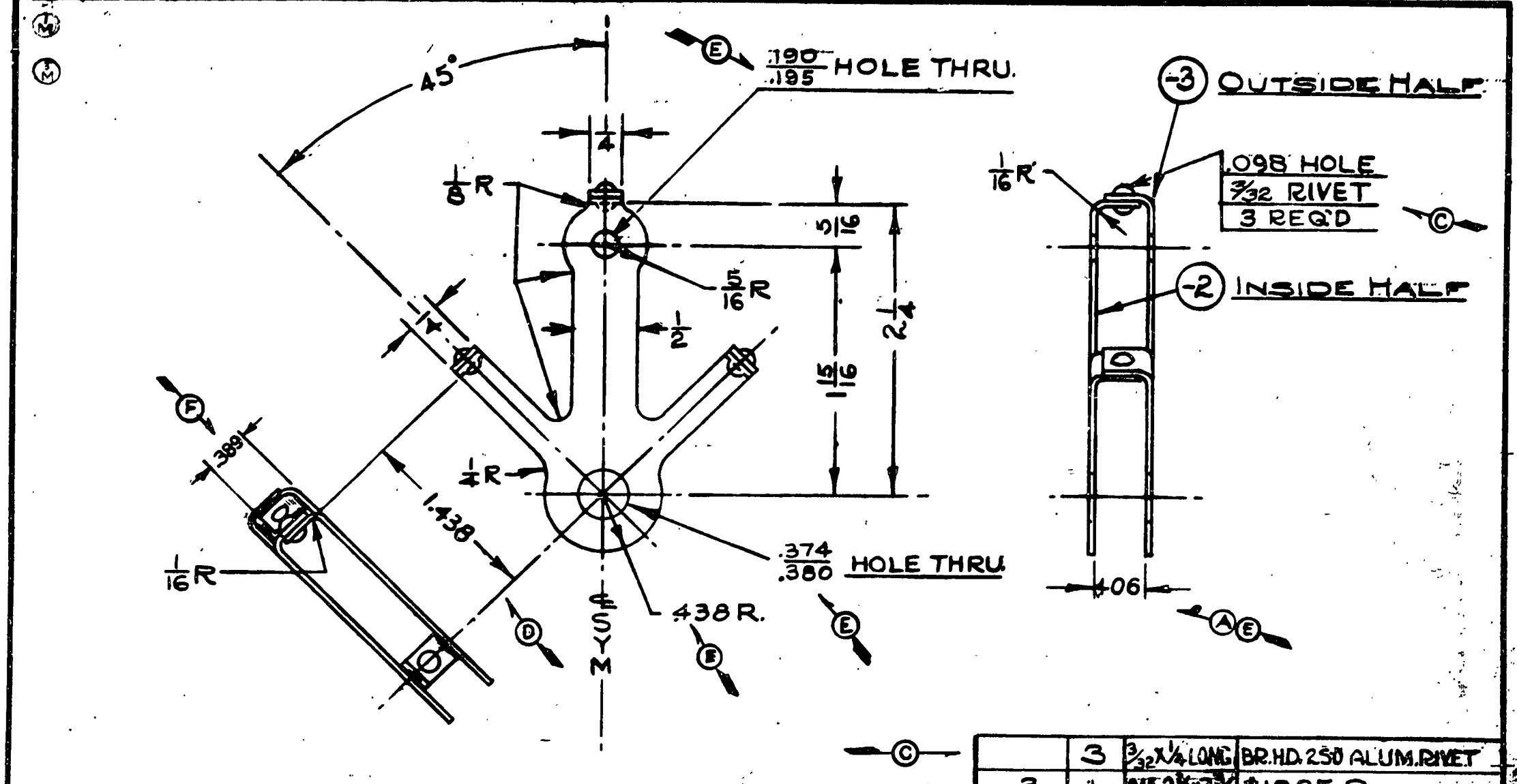

LIMITS, SHOP PRACTICES AND FINISH, UNLESS OTHERWISE NOTED, TO BE IN ACCORDANCE WITH PIPER SPECIFICATIONS #9 AND #10.

PART No.	No. REQ.	SIZE	DESCRIPTION / MATERIAL
	3	3/32 X 1/4 LONG	BR. HD. 250 ALUM. RIVET
-3	1	.045 x 2 3/4 x 3 3/8	#1025 STEEL
-2	1	.065 x 2 3/4 x 3 3/8	#1025 STEEL

SCALE FULL SIZE

HOUSING ASSY.—WING AILERON CABLE PULLEY

LET.	REVISION	DATE	SR.	BY
G	J3 ILA 10552 WAS 13395	4-5-46		L.R.
F	.389 DIM. ADDED	7-28-43		C.E.K.
E	DIMENSIONS REVISED	4-28-43		C.E.K.
D	1.438 WAS 1 13/32	4-28-43		C.E.K.
C	RIVET SPEC. REVISED	3-6-43		R.R.F.
B	"ASSY." ADDED TO TITLE	10-8-42		C.E.K.
A	1/2 OUTSIDE-WAS 3/8 INSIDE	3-24-42		W.E.S.

MODEL	PER SHIP	NEXT ASSEMBLY	SUPERSEDES	SUPERSEDED BY
TG-8	4	12953, 13395		
L-4B	4	12953, 13395		
L-4A	4	12953, 13395		
J3	4	12953, 10552, 14932		

PIPER AIRCRAFT CORP.
LOCK HAVEN, PENNA.

DRAWN	CHECKED	APPROVED
WNEillery 11-10-41	3/8 12-3-41	

41291

NO. 186-L ALBANENE A. & B. SMITH CO., PGH., PA.

311

A311

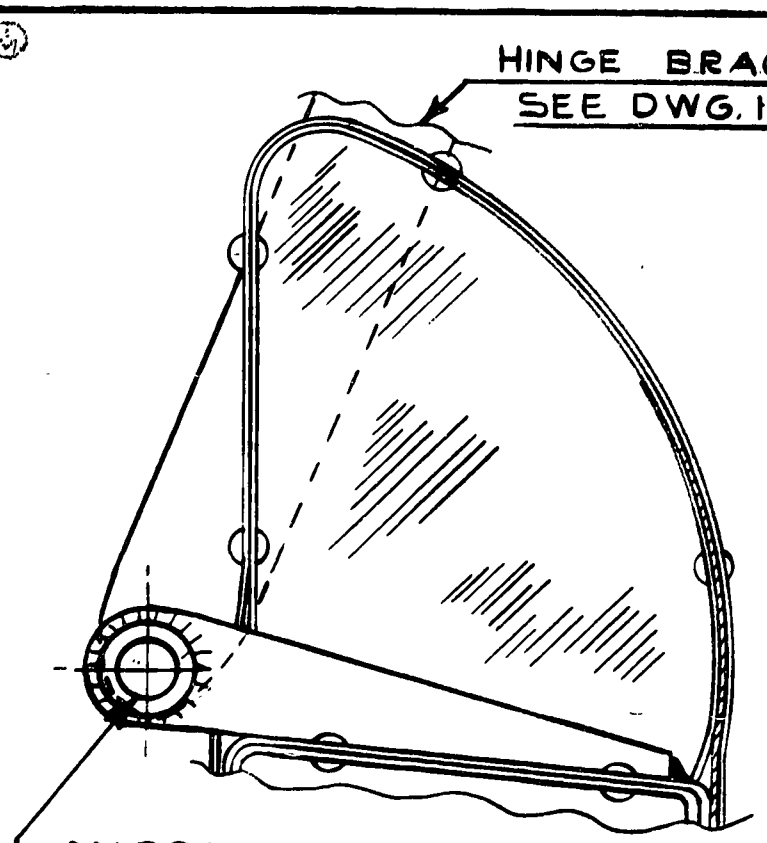

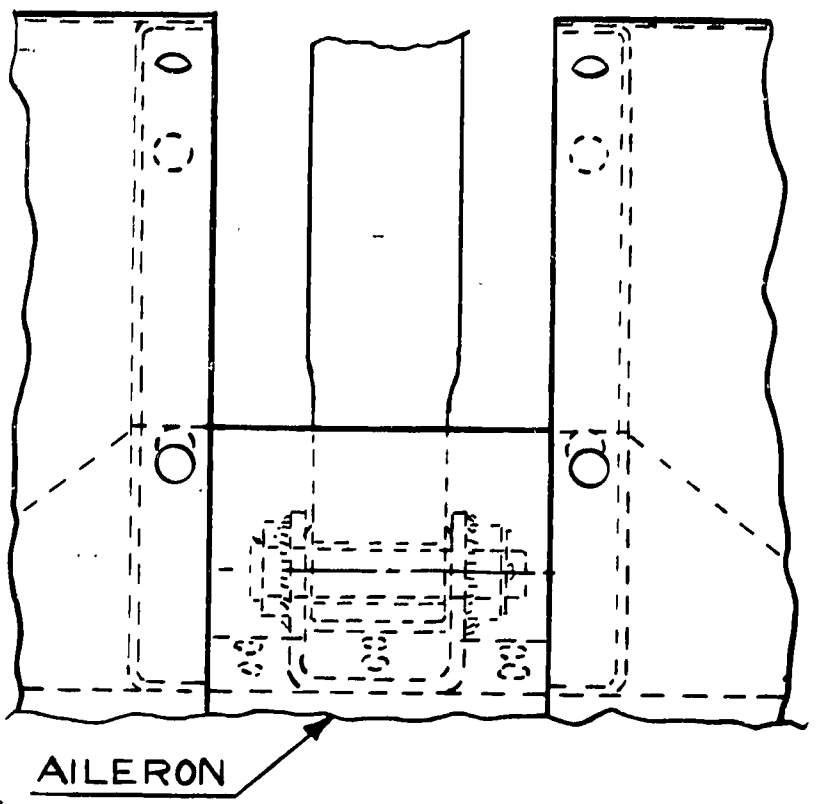



LIMITS, SHOP PRACTICES AND FINISH. UNLESS OTHERWISE NOTED, TO BE IN ACCORDANCE WITH PIPER SPECIFICATIONS #9 AND #10.

PART No.	No. REQ.	NAME / MATERIAL
80122-16	1	WASHER
AN394-41	1	1/4" FLAT-HEAD PIN
AN380-2-2	1	COTTER PIN

LET.	REVISION	DATE	BY
E	REDRAWN WITHOUT CHANGE	4-21-44	J.D.B.
D	AN394-41 WAS AN394-45	1-18-43	RET
C	AN394-45 WAS AN394-33	8-19-42	J.D.N.
B	TITLE CHANGED	5-5-42	MGS
A	40514, 40514-1 REMOVED	5-1-42	MGS

MODEL	PER SHIP	NEXT ASSEMBLY	SUPERSEDES	SUP. BY
TG-8	6	14151		
L-4B	6	13411		
L-4A	6	13411		
J3	6	13411, 10251		

PIPER AIRCRAFT CORP.
LOCK HAVEN, PENNA.

SCALE FULL SIZE. TOTAL WT.-LBS.
FINISH

FITTINGS INST.— AILERON ATTACHMENT

C.L.W.	C.F.S.	
11-26-41	3-18-42	
DRAWN	CHECKED	APPROVED

41351

312

A312

FOR PULLEY HOUSING INSTALLATION
SEE DWG. 20972

TO TORQUE TUBE

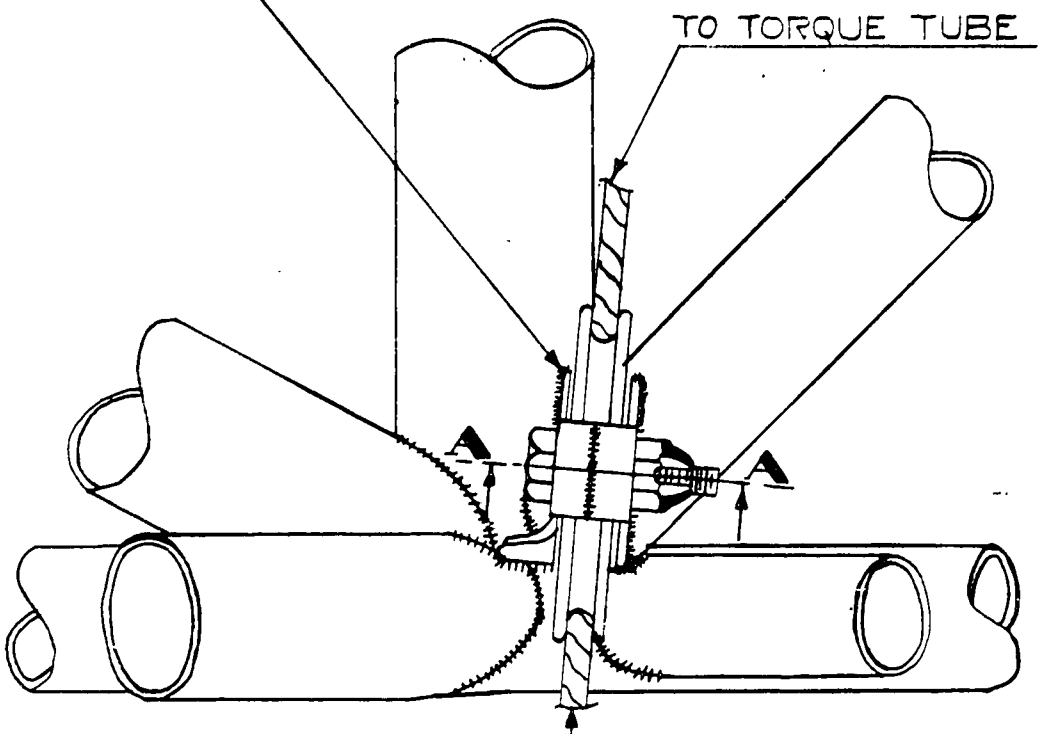

TO AILERON

(A) BUSHING & WASHERS CLAMPED BETWEEN BRACKET SIDES PULLEY 80421 TO TURN FREELY ON BUSHING

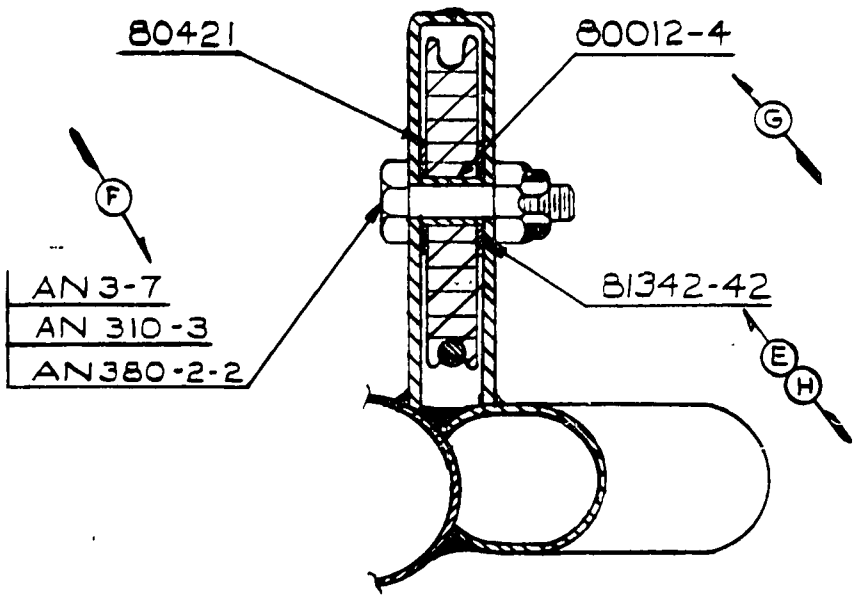

SECTION A—A

(H)(E)

(F)(G)

(C)(L)(J)(D)(B)

LIMITS, SHOP PRACTICES AND FINISH, UNLESS OTHERWISE NOTED, TO BE IN ACCORDANCE WITH PIPER SPECIFICATIONS #9 AND #10.

PART No.	No. REQ.	NAME / MATERIAL
81342-42	2	WASHER
AN 380-2-2	1	COTTER
AN 310-3	1	NUT
AN 3-7	1	BOLT
80012-4	1	BUSHING
80421	1	PULLEY

MODEL	PER SHIP	NEXT ASSEMBLY	SUPERSEDES	SUP. BY
TG-8	2	23535		
L-4B	2	23326		
L-4A	2	24256		
J3	2	24176		

LET.	REVISION	DATE	BY
L	L-4A N.A. 24256 WAS 23876	6-26-44	R.D.R
K	REDRAWN WITHOUT CHANGE	4-17-44	V.P.
J	J3 NEXT ASS'Y. 24176 WAS 23544	11-22-43	A.H.
H	81342-42 WAS 81342-19	8-29-43	R.E.T.
G	80012-4 WAS 80012-3	5-29-43	R.E.T.
F	AN 3-7 WAS AN 3-6	4-20-43	C.K.
E	81342-19 ADDED	4-20-43	C.K.
D	L-4A NEXT ASS'Y 23876 WAS 23806	4-20-43	R.E.S.
C	NO. SHIP FOR TG-8 WAS 1	1-19-43	R.E.S.
B	L-4A NEXT ASS'Y 23806 WAS 51155	1-19-43	R.E.S.
A	NOTE ADDED	4-22-42	H.N.

PIPER AIRCRAFT CORP.
LOCK HAVEN, PENNA.

SCALE FULL SIZE — TOTAL WT. - LBS.
FINISH

PULLEY INSTALLATION — FUSELAGE: AILERON CABLE

DRAWN	CHECKED	APPROVED
1-5-42 R.C.	R.C.M. 1-6-42	

41361

313

A313

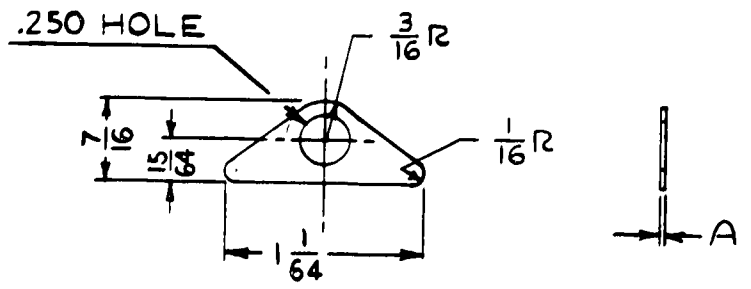

PART NO.	MODEL	NEXT ASSEMBLY
41371-2	J5C	42625, 42953
41371-3	J3	42833, 42573
41371-4	L-4A	42833, 42573

PART NO.	A	MATERIAL	WAS PART
41371-2	.010 TO 0.014	61S-T ALUM OR NICRAL	4133
41371-3	.015 TO 0.020	61S-T ALUM. OR NICRAL	4134
41371-4	.032	* 1025 STEEL	J3-430

(N)

NOTE:
NUMBER OF SHIMS USED PER. AIRPLANE DEPENDS UPON PRODUCTION VARIATIONS.

LIMITS, SHOP PRACTICES AND FINISH, UNLESS OTHERWISE NOTED, TO BE IN ACCORDANCE WITH PIPER SPECIFICATIONS #9 AND #10.

LET.	REVISION	DATE	BY
N	61S-T WAS HARD ALUM FOR 26-3	5-28-45	J.B.M.
M	REDRAWN & REVISED	12-22-43	J.C.

MODEL	PER SHIP	NEXT ASSEMBLY	SUPERSEDES	SUP. BY
NOTED	NOTED	NOTED		

PIPER AIRCRAFT CORP.
LOCK HAVEN, PENNA.

PART No.	No. REQ.	SIZE	DESCRIPTION
		NOTED x 7/16 x 1 1/64	NOTED
		MATERIAL	

SCALE FULL SIZE | TOTAL WT. - LBS.
FINISH

SHIM-TORQUE TUBE BEARING

DRAWN	CHECKED	APPROVED
J.C. TROWLEY 12-22-43	C.K. 12-23-43	

41371

314

A314

WAS J3-504
D465-A

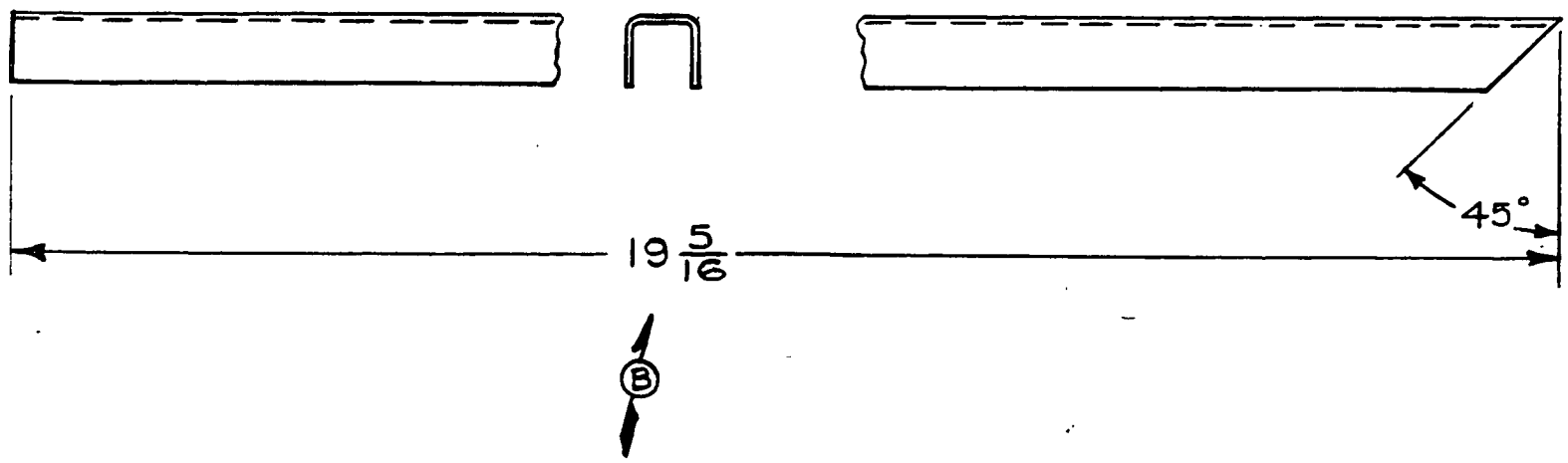

				L-2B	1	40592		
				J3J5D	1	40592		
				L-4A	1	40592		
				J3J5D	1	40592		
				J3-TG8	1	40592		
C	REDRAWN WITHOUT CHANGE	4-26-44	V.P.	MODEL	PER PLANE	NEXT ASSEMBLY	SUPERSEDES	SUP. BY
B	19 5/16 WAS 19 1/4	5-23-43	R.R.F.					
A	SPEC. REVISED TO INCLUDE 84501-2	5-12-43	R.R.F.					
LET.	REVISION	DATE	BY					

PENCILTEX A. & B. SMITH CO., PGH., PA.

PIPER AIRCRAFT CORP.
LOCK HAVEN, PENNA.

84501	DWG REF. ONLY	CHANNEL SECTION	
		19 5/16 LONG	PIPER SECTION 84501-2
PART No.	No. REQ.	SIZE	DESCRIPTION
		MATERIAL	
SCALE FULL SIZE		TOTAL WT.-LBS.	

FINISH—PIPER SPECIFICATION #10
MANUFACTURING PRACTICES—PIPER SPECIFICATION #9

BRACE-FIN UPPER

1-6-42	R.C.M.	
R.C.	1-6-42	
DRAFTSMAN	CHECKER	STANDARDS

41391

315

A315

WAS J3-505 / D465-A

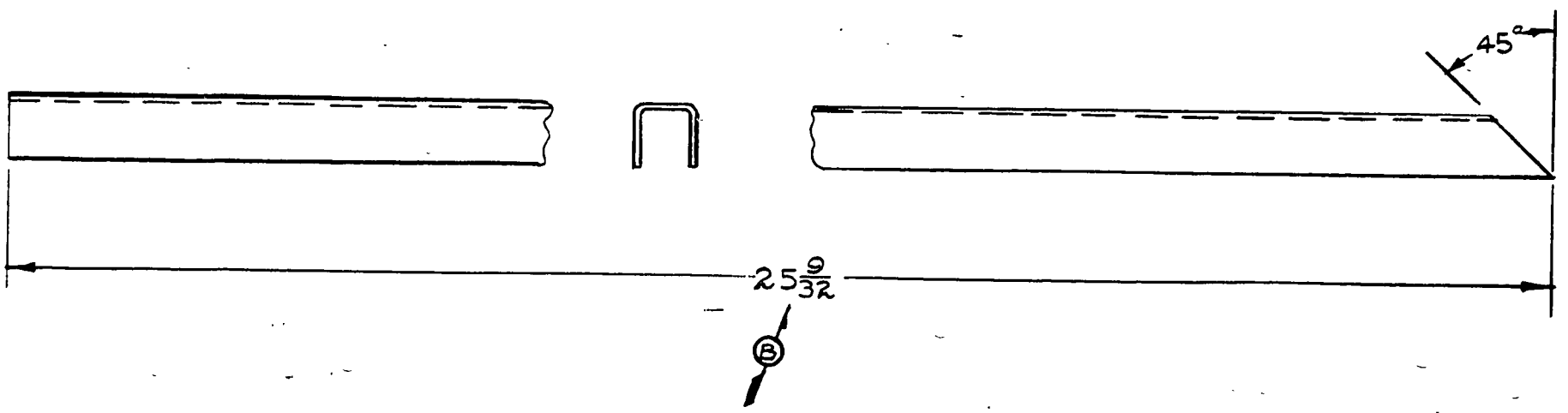

LIMITS, SHOP PRACTICES AND FINISH. UNLESS OTHERWISE NOTED, TO BE IN ACCORDANCE WITH PIPER SPECIFICATIONS #9 AND #10.

PART No.	No. REQ.	SIZE	DESCRIPTION / MATERIAL
84501	DWG REF ONLY		CHANNEL SECTION
		25 9/32 LONG	PIPER SECTION 84501-2

SCALE FULL SIZE — TOTAL WT. - LBS.

FINISH

BRACE — FIN LOWER

MODEL	PER SHIP	NEXT ASSEMBLY	SUPERSEDES	SUP. BY
L-4B	1	40592		
HE-1	1	40592		
J5D	1	40592		
L-4A	1	40592		
J5J5C	1	40592		
J3	1	40592		
TG-6	1	40592		

LET	REVISION	DATE	BY
C	REDRAWN WITHOUT CHANGE	4-26-44	V.P.
B	25 9/32 WAS 25 5/16	5-23-43	R.F.F.
A	SPEC. REVISED TO INCLUDE 84501-2	5-12-43	R.F.F.

PIPER AIRCRAFT CORP.
LOCK HAVEN, PENNA.

DRAWN	CHECKED	APPROVED
V.P. FEEFER 4-26-44	R.E.T. 4-27-44	

41401

316

A316

WAS 40251-3

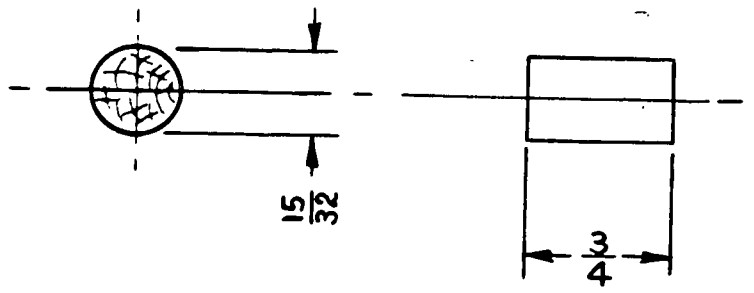

Ⓑ

NOTE:
DIP IN ZINC CHROMATE PRIMER

Ⓓ Ⓒ

				MODEL	PER PLANE	NEXT ASSEMBLY	SUPERSEDES	SUP. BY
				J-E-J5D	3	40251, 40861		
				TG-8	3	40251, 40861		
				J5, J5C	3	40861, 40251		
				L-4A, L-4B	3	40251, 40861		
				J8	3	40861, 40251		
E	REDRAWN WITHOUT CHANGE	6-20-51	C.K.					
D	L-4A & L-4B NEXT ASSY 40861 WAS 40681	9-2-43	I.D.B.					
C	NEXT ASSY 40251 CANCELED	9-2-43	I.D.B.					
B	NOTE ADDED	5-11-43	R.R.F.					
A	NO. PER SHIP 3 WAS 2	10-8-42	H.R.K.					
LET	REVISION	DATE	BY					

THIS DRAWING IS THE PROPERTY OF THE PIPER AIRCRAFT CORP. AND ITS POSSESSION BY UNAUTHORIZED PERSONS SHALL NOT BE CONSTRUED AS PERMISSION TO REPRODUCE FOR SALE IN WHOLE OR IN PART ANY DEVICES SHOWN THEREON.

PIPER AIRCRAFT CORP.
LOCK HAVEN, PENNA.

PART NO.	NO. REQ.	SIZE	DESCRIPTION / MATERIAL
		1/2 × 1/2 × 3/4	WOOD

SCALE FULL SIZE — TOTAL WT.—LBS.

FINISH—PIPER SPECIFICATION # 10

MANUFACTURING PRACTICES—PIPER SPECIFICATION # 9

DOWEL—TUBE

DRAFTSMAN	CHECKER	STANDARDS
H.R. RUDOLPH 1-13-42	R. R. B. 1-27-42	

41411

317

A317

WAS J2-414

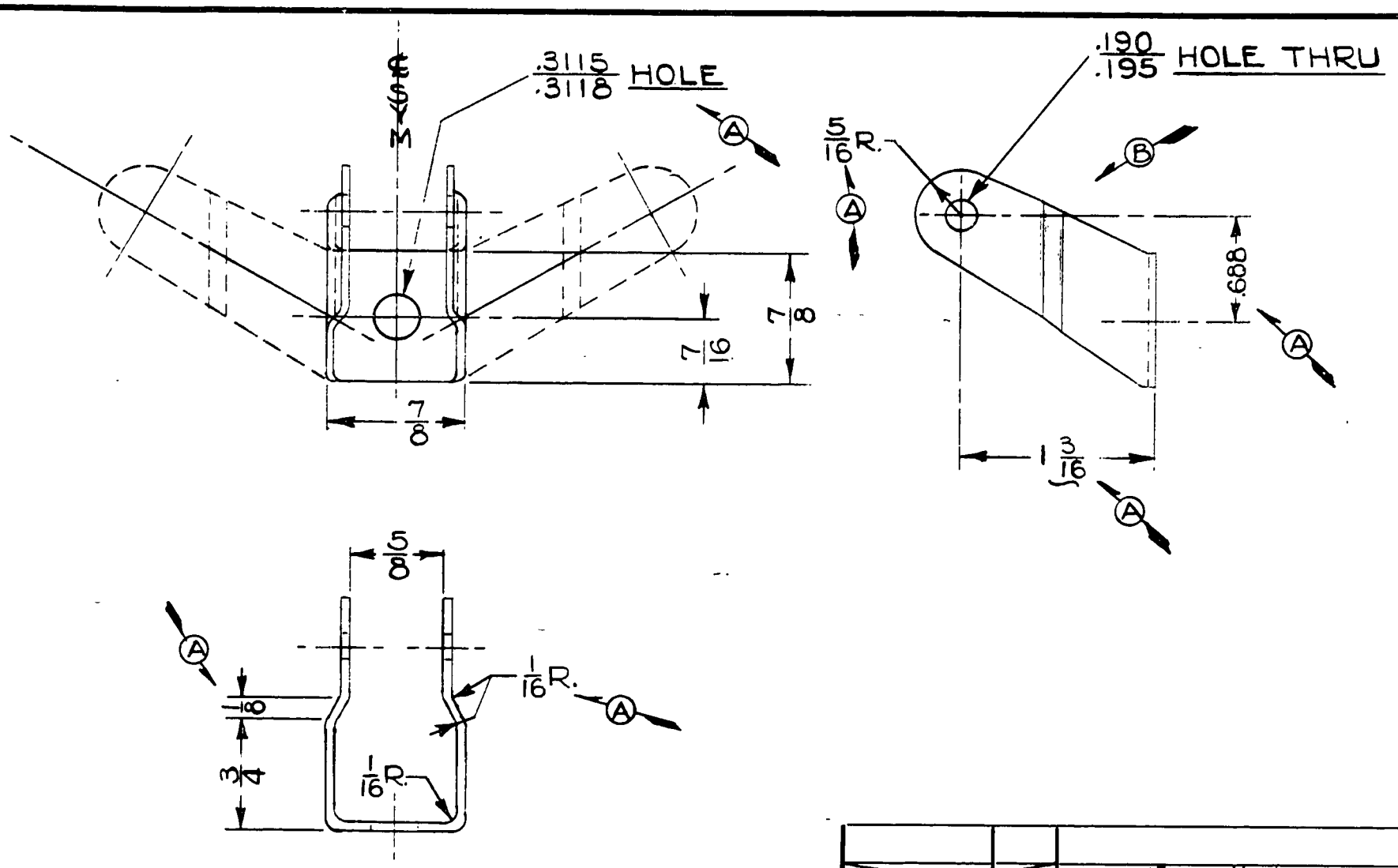

							.045×1 15/32×3 11/16	#1025 STEEL	
				PART NO.	NO. REQ.		SIZE	DESCRIPTION	
							MATERIAL		
				SCALE FULL SIZE			TOTAL WT.—LBS.		
				FINISH—PIPER SPECIFICATION # 10					
				MANUFACTURING PRACTICES—PIPER SPECIFICATION # 9					
				TG-8	2	13395			
				L-4B	2	13395			
				L-4A	2	13395			
				J3	2	10552			
				MODEL	PER PLANE	NEXT ASSEMBLY	SUPERSEDES	SUP. BY	
D	REDRAWN WITHOUT CHANGE	6-14-51	LEM	THIS DRAWING IS THE PROPERTY OF THE PIPER AIRCRAFT CORP. AND ITS POSSESSION BY UNAUTHORIZED PERSONS SHALL NOT BE CONSTRUED AS PERMISSION TO REPRODUCE FOR SALE IN WHOLE OR IN PART ANY DEVICES SHOWN THEREON.			FITTING—AILERON PULLEY BRACKET ATTACHMENT (LOWER)		
C	J3 N.A. 10552 WAS 13395	4-5-46	LR						
B	VIEW REVISED	10-11-43	MGS						
A	DIMENSIONS REVISED	4-29-43	CEK	PIPER AIRCRAFT CORP. LOCK HAVEN, PENNA.					
LET	REVISION	DATE	BY				SCHEID	R.R.B.	
							T-15-42	2-2-42	
							DRAFTSMAN	CHECKER	STANDARDS

41421

318

A318

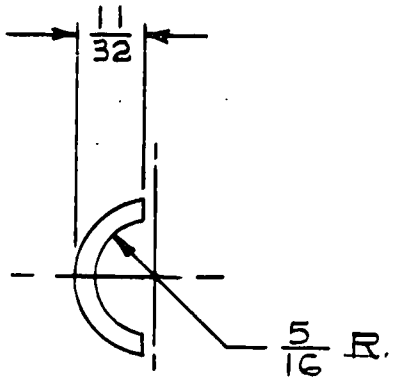

				L-4A	6	41602-40842		
				J5C	6	41602-40842		
				J3	6	41602-40842		
				MODEL	PER PLANE	NEXT ASSEMBLY	SUPERSEDES	SUP. BY
D	REDRAWN & REVISED	7-27-44	LDB	PIPER AIRCRAFT CORP. LOCK HAVEN, PENNA.				
LET.	REVISION	DATE	BY					

PENCILTEX A. & B. SMITH CO., PGH., PA.

		3/32 x 1	COLD DRAWN STEEL WIRE
PART No.	No. REQ.	SIZE	DESCRIPTION
		MATERIAL	
SCALE FULL SIZE		TOTAL WT.–LBS.	

FINISH–PIPER SPECIFICATION #10

MANUFACTURING PRACTICES–PIPER SPECIFICATION #9

STOP – PEDAL THRUST

T. BARNARD	R. E. T.		41461
7-27-44	8-4-44		
DRAFTSMAN	CHECKER	STANDARDS	

319

A319

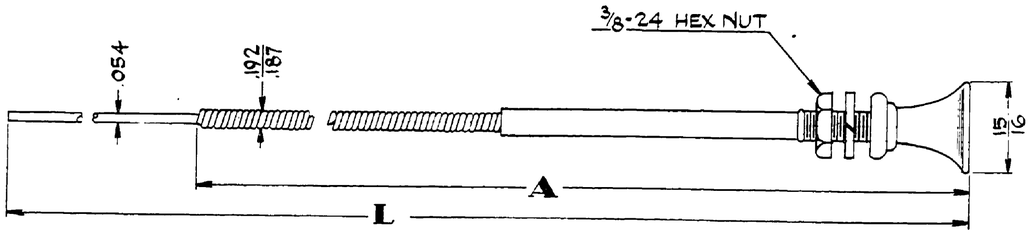

ASS'Y. NO.	MFG. PART NO.	L	A	REMARKS
41481	828555	85		CARB. HEAT CONTROL
41481-2	828555	52		CABIN HEAT CONTROL
41481-3	829132	85		MIXTURE CONTROL
41481-4		57		CARB. HEAT CONTROL
41481-5		57		MIXTURE CONTROL
41481-6	828555 CREAM KNOB 2K77	60		CARB. HEAT CONTROL
41481-7		60		CABIN HEAT CONTROL
41481-8		60		MIXTURE CONTROL
41481-9	3A550(WITHOUT FRICTION DEVICE) CREAM KNOB 2K77	32	28	PARKING BRAKE (NO MARKING ON KNOB)
41481-10	828555 CREAM KNOB 2K77	46		MIXTURE CONTROL
41481-11		48		CABIN HEAT CONTROL
41481-12		53		CARB. HEAT CONTROL
41481-13		49 1/4		CARB. HEAT CONTROL
41481-14	3A550(WITHOUT FRICTION DEVICE) CREAM KNOB 2K77	40	36	PARK BRAKE
41481-15	828555	60		KNOB REMOVED & END THREADED #10-32 NF-3 x 1/2 L
41481-16	828555	65		WITHOUT KNOB & THREADED END

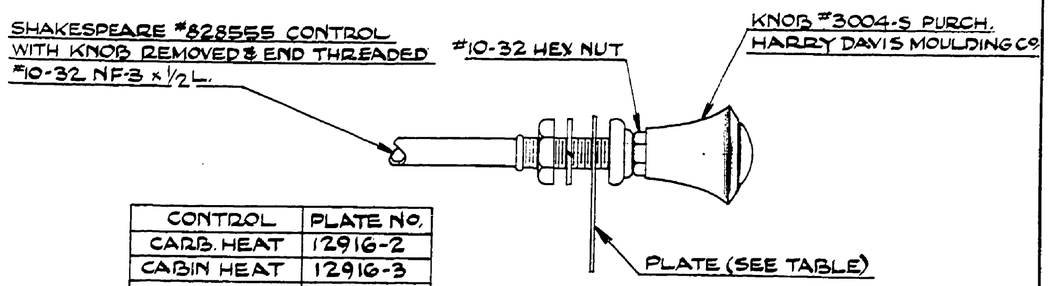

CONTROL	PLATE NO.
CARB. HEAT	12916-2
CABIN HEAT	12916-3
MIXTURE	12916-4

FIG. 1
ALTERNATE CONSTRUCTION

NOTES:
1. IF CONTROLS WITH MARKINGS ON KNOB ARE NOT AVAILABLE USE ALTERNATE CONSTRUCTION SHOWN IN FIG. 1
2. MFG. PART NO'S. ARE SHAKESPEARE PRODUCTS CO.

THIS DRAWING IS THE PROPERTY OF THE PIPER AIRCRAFT CORP. AND ITS POSSESSION BY UNAUTHORIZED PERSONS SHALL NOT BE CONSTRUED AS PERMISSION TO REPRODUCE FOR SALE, IN WHOLE OR IN PART. ANY DEVICES SHOWN THEREON

LET.	REVISION	DATE	BY
S	-16 ADDED	7-26-50	CK
T2	RE-DRAWN & REVISED	6-22-50	HC

MODEL	PER PLANE	NEXT ASSEMBLY	SUPERSEDES	SUP. BY

PIPER AIRCRAFT CORP.
LOCK HAVEN, PENNA.

PART NO. | NO. REQ. | MATERIAL
SCALE FULL SIZE | TOTAL WT.-LBS.
FINISH-PIPER SPECIFICATION #10
MANUFACTURING PRACTICES-PIPER SPECIFICATION #9

CABLE ASSEMBLY - CONTROL

DRAFTSMAN	CHECKER	STANDARDS
6-22-50	H. R. K. 6-22-50	

41481

808

A808

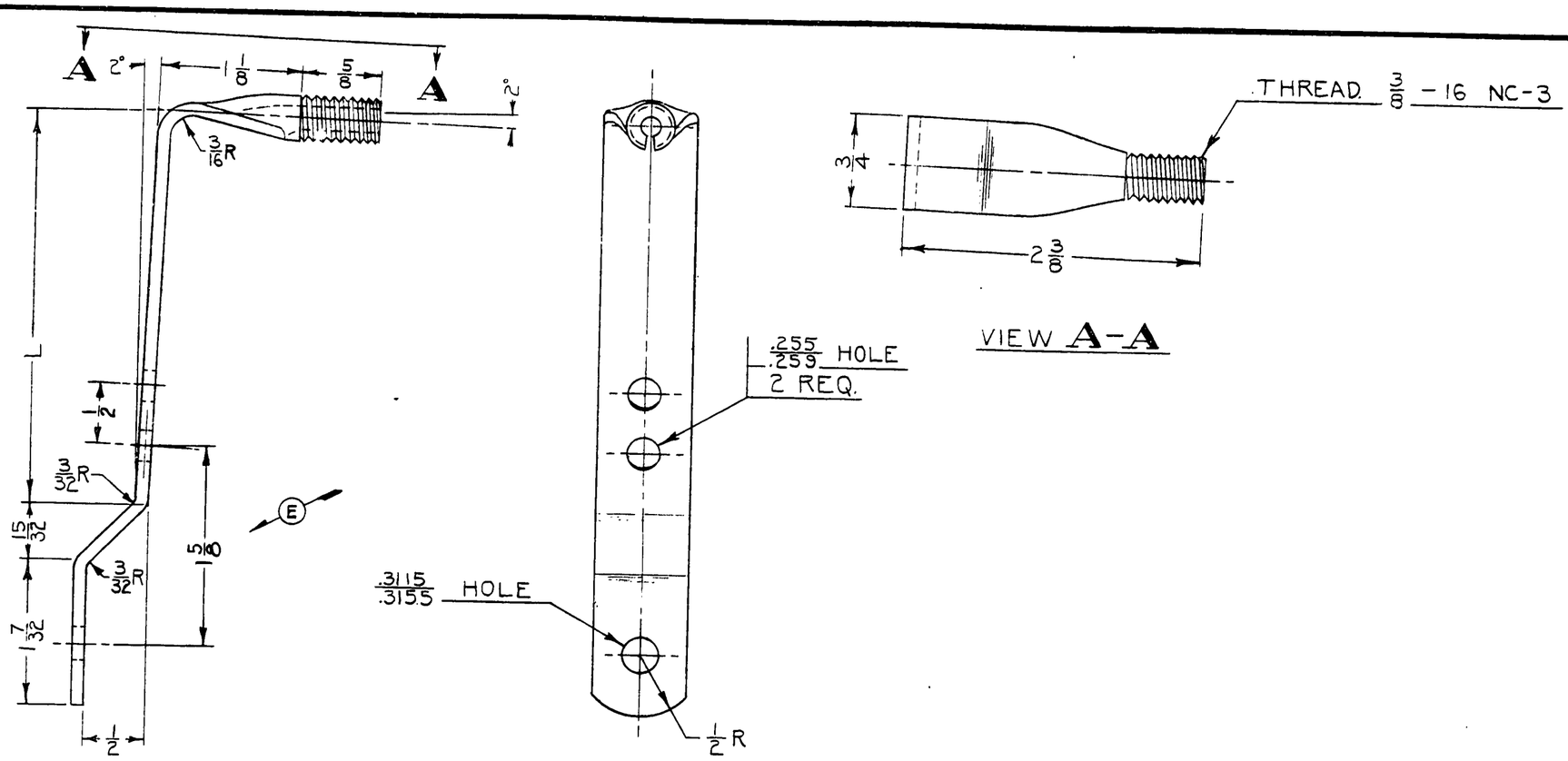

PART NO.	L	MODEL	PER PLANE	NEXT ASSEMBLY
41491	3 3/16	J3	2	41512
41491-2	5 5/16	J5C	1	41512
41491-3	6 5/16	J5C	1	41512

THIS DRAWING IS THE PROPERTY OF THE PIPER AIRCRAFT CORP. AND ITS POSSESSION BY UNAUTHORIZED PERSONS SHALL NOT BE CONSTRUED AS PERMISSION TO REPRODUCE FOR SALE, IN WHOLE OR IN PART, ANY DEVICES SHOWN THEREON

LET.	REVISION	DATE	BY
E	1/2 DIM. ADDED. 2 1/4 DIM. REM.	1-23-47	T.N.K
D	REDRAWN & REVISED	10-17-45	E.L.N

MODEL	PER PLANE	NEXT ASSEMBLY	SUPERSEDES	SUP. BY
NOTED	NOTED	NOTED		

PIPER AIRCRAFT CORP.
LOCK HAVEN, PENNA.

PART No.	No. REQ.	SIZE	MATERIAL / DESCRIPTION
		.095 x 3/4 x NOTED	#1025 STEEL

SCALE FULL SIZE — TOTAL WT.—LBS.

FINISH—PIPER SPECIFICATION #10

MANUFACTURING PRACTICES—PIPER SPECIFICATION #9

LEVER - THROTTLE

DRAFTSMAN	CHECKER	STANDARDS
E.L.N. 10-17-45	R.E.T. 10-18-45	

41491

641

A641

WAS 4312 / D4322-A

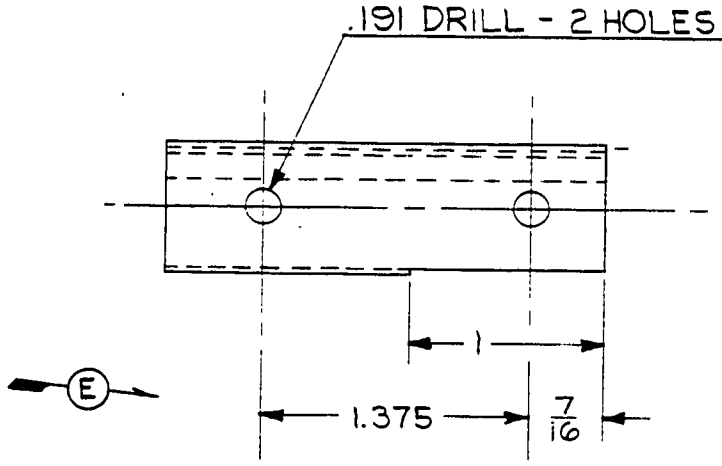

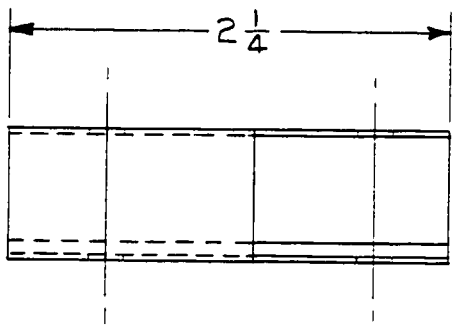

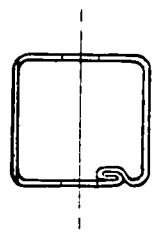

NOTE:
HOLES TO COINCIDE WITH
THOSE ON 80222-3 & 81262-8

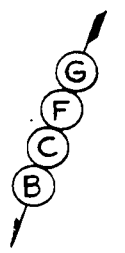

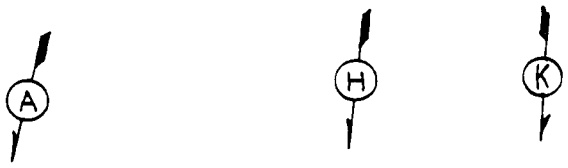

LET.	REVISION	DATE	BY
K	85161 WAS 85161-2	12-14-43	K.D.D.
J	REDRAWN WITHOUT CHANGE	4-26-44	V.C.P.
H	SPEC. REV. TO INCLUDE 85161-2	3-2-44	C.H.S.
G	J5C NEXT ASS'Y. 42625 WAS 42403	12-21-43	J.E.C.
F	J3 NEXT ASS'Y. 42573 WAS 41613	9-2-43	I.D.B.
E	7/16 REMOVED; 1.375 ADDED	4-6-43	I.D.B.
D	NOTE ADDED	4-6-43	I.D.B.
C	J3 NEXT ASS'Y. 41613 WAS 42573	3-31-43	M.G.S.
B	NEXT ASS'Y FOR J3 & L-4A WAS 41613	1-26-43	R.E.T.
A	.030 WAS .022	5-4-42	M.G.S.

MODEL	PER PLANE	NEXT ASSEMBLY	SUPERSEDES	SUP. BY
J5C	2	42625		
L-4B	2	41613		
NE-1	2	42373		
J5D	2	42403		
TG-8	2	41613		
J3-L-4A	2	42573		

PIPER AIRCRAFT CORP.
LOCK HAVEN, PENNA.

PENCILTEX A. & B. SMITH CO., PGH., PA.

85161	DWG. REF. ONLY	SQUARE TUBE SECTION
		2 1/4 LONG — PIPER SECTION 85161
PART No.	No. REQ.	SIZE — DESCRIPTION
		MATERIAL
SCALE FULL SIZE		TOTAL WT.—LBS.

FINISH—PIPER SPECIFICATION #10
MANUFACTURING PRACTICES—PIPER SPECIFICATION #9

BLOCK — FRONT BRAKE
PEDAL BEARING (OUTBOARD)

Mc RAE	C. F. S.	
3-12-42	3-18-42	
DRAFTSMAN	CHECKER	STANDARDS

41521

320

A320

WAS 4301
D4303-A

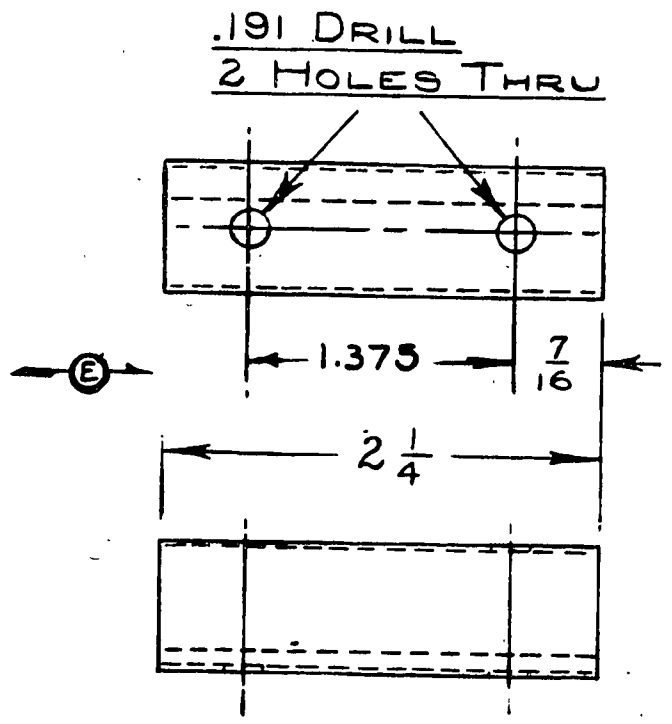

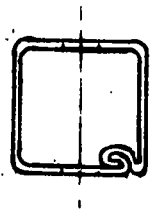

NOTE: HOLES TO COINCIDE WITH THOSE ON 80222-3 & 81262-8

LIMITS, SHOP PRACTICES AND FINISH, UNLESS OTHERWISE NOTED, TO BE IN ACCORDANCE WITH PIPER SPECIFICATIONS #9 AND #10.

LET.	REVISION	DATE	SR.	BY
J	85161 WAS 85161-2	12-14-43		K.D.D.
H	SPEC REV TO INCL. 85161-2	3-2-44		CHS
G	USC NEXT ASSY. 42625 WAS 42403	12-21-43		J.E.C.
F	J3 NEXT ASSY WAS J3W5 41613	9-2-43		I.D.B.
E	7/16 REMOVED, 1.375 ADDED	4-6-43		I.D.B.
D	NOTE ADDED	4-6-43		I.D.B.
C	J3 NEXT ASS'Y 41613 W/S 42573	3-31-43		M.G.S.
B	NEXT ASSY FOR J3L-4A WAS 41613	1-26-43		R.E.T.
A	.030" WAS .022"	54-42		M.G.S.

MODEL	PER SHIP	NEXT ASSEMBLY	SUPERSEDES	SUPERSEDED BY
J3C	2	42625		
J4B	2	41613		
HE1	2	42373		
J5D	2	42403		
TG-8	2	41613		
J3L4A	2	42573		

PIPER AIRCRAFT CORP.
LOCK HAVEN, PENNA.

85161	DWG REF ONLY	SQUARE TUBE SECTION
		2 1/4 LONG — PIPER SECT. 85161
PART No.	No. REQ.	SIZE — DESCRIPTION
		MATERIAL

SCALE FULL SIZE

BLOCK — FRONT BRAKE PEDAL BEARING (INBOARD)

C.L.W.	C.F.S.	
3-11-42	3-18-42	
DRAWN	CHECKED	APPROVED

41531

321

A321

WAS J2-841 / J2-A48

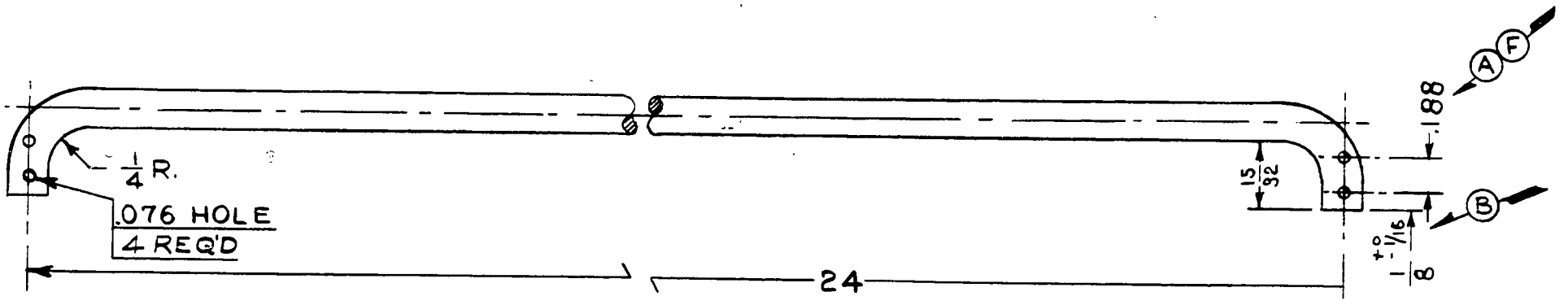

NOTE: LINK SUPPLIED BY SHAKESPEARE MFG. CO.

H G E C D

LET	REVISION	DATE	BY
J	REDRAWN WITHOUT CHANGE	5-31-51	I.M.M.
H	L-4A NEXT ASSY. 24256 WAS 23876	6-26-44	R.D.R.
G	J3 NEXT ASSY- 24176 WAS 23544	11-22-43	A.H.
F	.188 WAS 3/16	5-11-43	C.E.K.
E	L-4A NEXT ASSY. 23876 WAS 23806	4-20-43	R.E.S.
D	MATERIAL SPEC. ADDED	3-15-43	C.E.K.
C	L-4A NEXT ASSY. 23806 WAS 51155	1-19-43	R.E.S.
B	+0 -1/16 TOLERANCE ADDED	7-15-42	C.E.K.
A	3/16" DIM. WAS 9/32", 15/32" WAS 7/16"	7-15-42	C.E.K.

MODEL	PER PLANE	NEXT ASSEMBLY	SUPERSEDES	SUP. BY
TG-8	1	23535		
L-4B	1	23326		
J3	1	23534		
L-4A	1	24256		
J5	1	24176		

THIS DRAWING IS THE PROPERTY OF THE PIPER AIRCRAFT CORP. AND ITS POSSESSION BY UNAUTHORIZED PERSONS SHALL NOT BE CONSTRUED AS PERMISSION TO REPRODUCE FOR SALE IN WHOLE OR IN PART ANY DEVICES SHOWN THEREON.

PIPER AIRCRAFT CORP.
LOCK HAVEN, PENNA.

PART NO.	NO. REQ.	SIZE	MATERIAL
		1/4 DIA. x NOTED	#1020 STEEL ROD

SCALE FULL SIZE | TOTAL WT.—LBS.
FINISH—PIPER SPECIFICATION # 10
MANUFACTURING PRACTICES—PIPER SPECIFICATION # 9

LINK — THROTTLE

DRAFTSMAN	CHECKER	STANDARDS
H.R.K. 3-12-42	J.C.B. 3-13-42	

41551

322

A322

WAS 4117 / D4102-A

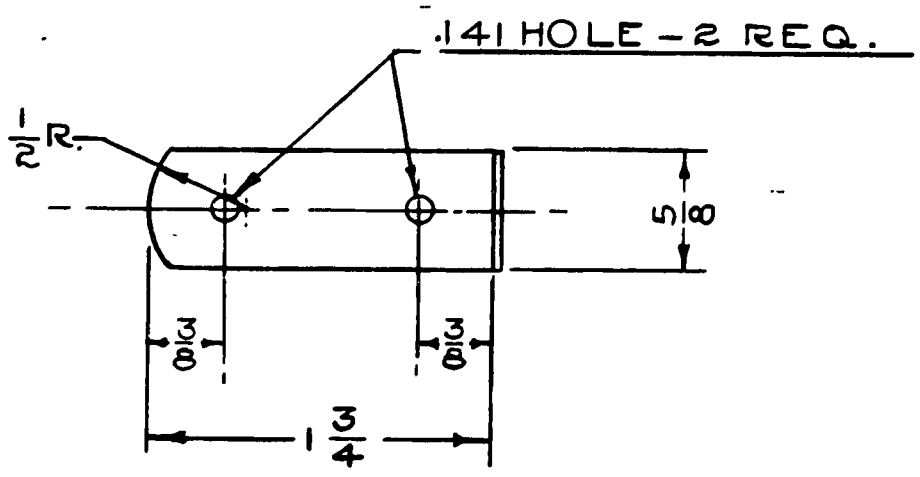

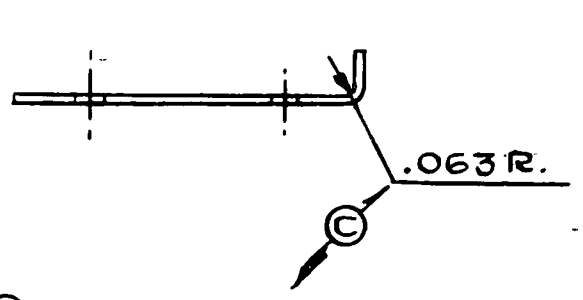

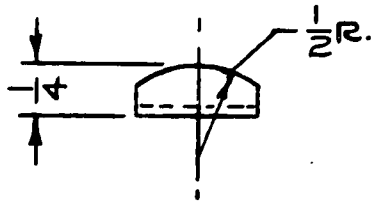

E D B A

LIMITS, SHOP PRACTICES AND FINISH. UNLESS OTHERWISE NOTED, TO BE IN ACCORDANCE WITH PIPER SPECIFICATIONS #9 AND #10.

LET.	REVISION	DATE	BY
F	REDRAWN WITHOUT CHANGE	4-25-44	I.M.
E	J5C NEXT ASS'Y. 42625 WAS 42403	12-21-43	J.E.C.
D	J3 NEXT ASS'Y. 42573 WAS 41613	9-2-43	L.D.B.
C	.063 R. WAS 1/16 R.	4-6-43	C.E.K.
B	J3 NEXT ASS'Y. 41613 WAS 42573	3-31-43	M.G.S.
A	NEXT ASS'Y. FOR J3 & L-4A WAS 41613	1-26-43	R.E.T.

MODEL	PER SHIP	NEXT ASSEMBLY	SUPERSEDES	SUP. BY
J5C	2	42625		
J5D	2	42403		
L-4B	2	41613		
HE-1	2	42373		
TG-8	2	41613		
J3 L-4A	2	42573		

PIPER AIRCRAFT CORP.
LOCK HAVEN, PENNA.

PART No.	No. REQ.	SIZE	DESCRIPTION / MATERIAL
		.032 x 5/8 x 2	*1025 STEEL

SCALE FULL SIZE | TOTAL WT.- LBS.
FINISH

STOP—FRONT BRAKE PEDAL

DRAWN	CHECKED	APPROVED	
J.M.McNERNEY 4-25-44	R.E.T. 4-27-44		41561

323

A323

ASSY. NO.	ROD NO.	L	MODEL	PER SHIP	NEXT ASSY.
41581-4	41581-2	26 3/4	J3	2	42573
41581-5	41581-6	30 1/4	TG-8	2	42134
41581-7	41581-8	25 7/8	J5C, J5D	2	42373
41581-9	41581-10	28 3/4	J5C, J5D	2	42625

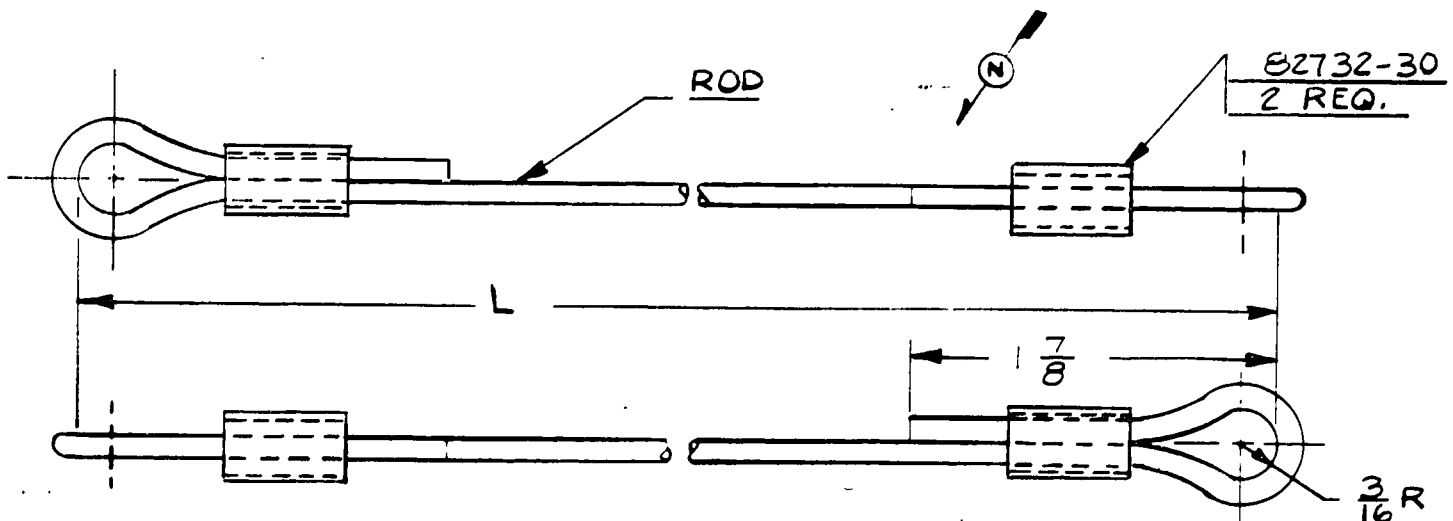

82732-30	2	BUSHING	
-10	1	.140 x 33 5/8	CHROME VANADIUM STEEL WIRE # 6-40 TIE ROD MAT'L. (SEE NOTE 1.)
-8		.140 x 30 3/4	
-6		.140 x 35 1/8	
-2		.140 x 31 5/8	
~~-3~~		DELETED-SEE DWG. 41581 DATED 3-3-42	
PART NO.	NO. REQ.	SIZE	DESCRIPTION MATERIAL

NOTE:
1. .120 TIE ROD MATERIAL (140,000# U.T.S. STEEL), OR 1/8 DIA WELDING ROD MAY BE USED TO MAKE 41581-2, -6, -8 & -10

LET	REVISION	DATE	BY	NOTED MODEL	NOTED PER PLANE	NOTED NEXT ASSEMBLY	SUPERSEDES	SUP. BY
Q	REDRAWN WITHOUT CHANGE	6-20-51	C.E.B.					
P	MAT'L. SPEC. REV.	8-7-46	HMZ					
O	J5C MODEL REF. CANC. FOR -7	12-23-43	JEC					
N	VIEW REVISED	10-11-43	C.J.H.					
M	J3 NEXT ASSY. 42573 WAS 41613	9-2-43	L.D.B.					
L	REDRAWN & REVISED	5-14-43	M.G.S.					

THIS DRAWING IS THE PROPERTY OF THE PIPER AIRCRAFT CORP. AND ITS POSSESSION BY UNAUTHORIZED PERSONS SHALL NOT BE CONSTRUED AS PERMISSION TO REPRODUCE FOR SALE IN WHOLE OR IN PART ANY DEVICES SHOWN THEREON.

PIPER AIRCRAFT CORP.
LOCK HAVEN, PENNA.

SCALE FULL SIZE | TOTAL WT.—LBS.
FINISH—PIPER SPECIFICATION # 10
MANUFACTURING PRACTICES—PIPER SPECIFICATION # 9

ROD ASSEMBLY — BRAKE PEDAL TIE

DRAFTSMAN	CHECKER	STANDARDS
M.G.S. 5-14-43	L.E.K. 5-18-43	

41581

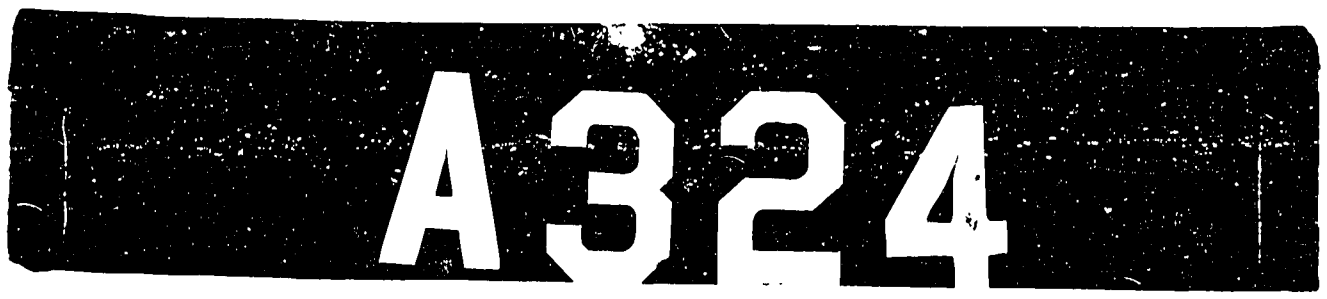

WAS 480/D489-A

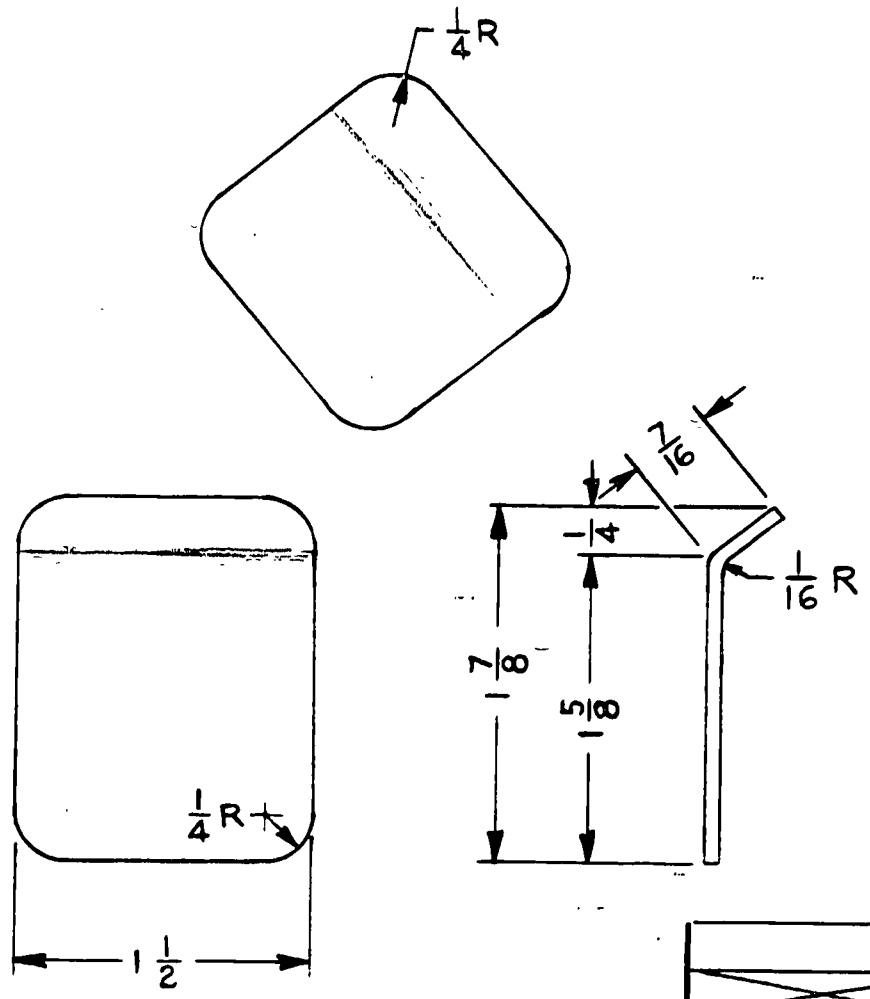

MODEL	PER PLANE	NEXT ASSEMBLY	SUPERSEDES	SUP. BY
TG-8	4	42182,42192		
HE-1	2	41602		
L-4B	2	41602		
J5C,J5D	2	41602		
L-4A	2	41602		
J3	2	41602		

PART NO.	NO. REQ.	SIZE	DESCRIPTION / MATERIAL
		.062×1½×2 1/32	#1025 STEEL

SCALE FULL SIZE | TOTAL WT.—LBS.

FINISH—PIPER SPECIFICATION # 10

MANUFACTURING PRACTICES—PIPER SPECIFICATION # 9

PLATE-BRAKE PEDAL HEEL

THIS DRAWING IS THE PROPERTY OF THE PIPER AIRCRAFT CORP. AND ITS POSSESSION BY UNAUTHORIZED PERSONS SHALL NOT BE CONSTRUED AS PERMISSION TO REPRODUCE FOR SALE IN WHOLE OR IN PART ANY DEVICES SHOWN THEREON.

LET	REVISION	DATE	BY
A	REDRAWN WITHOUT CHANGE	6-20-51	C.K.

PIPER AIRCRAFT CORP.
LOCK HAVEN, PENNA.

DRAFTSMAN	CHECKER	STANDARDS
C. L. W. 3-13-42	C. F. S. 3-17-42	

41591

325

A325

WAS A466R - A466L / D4100-A

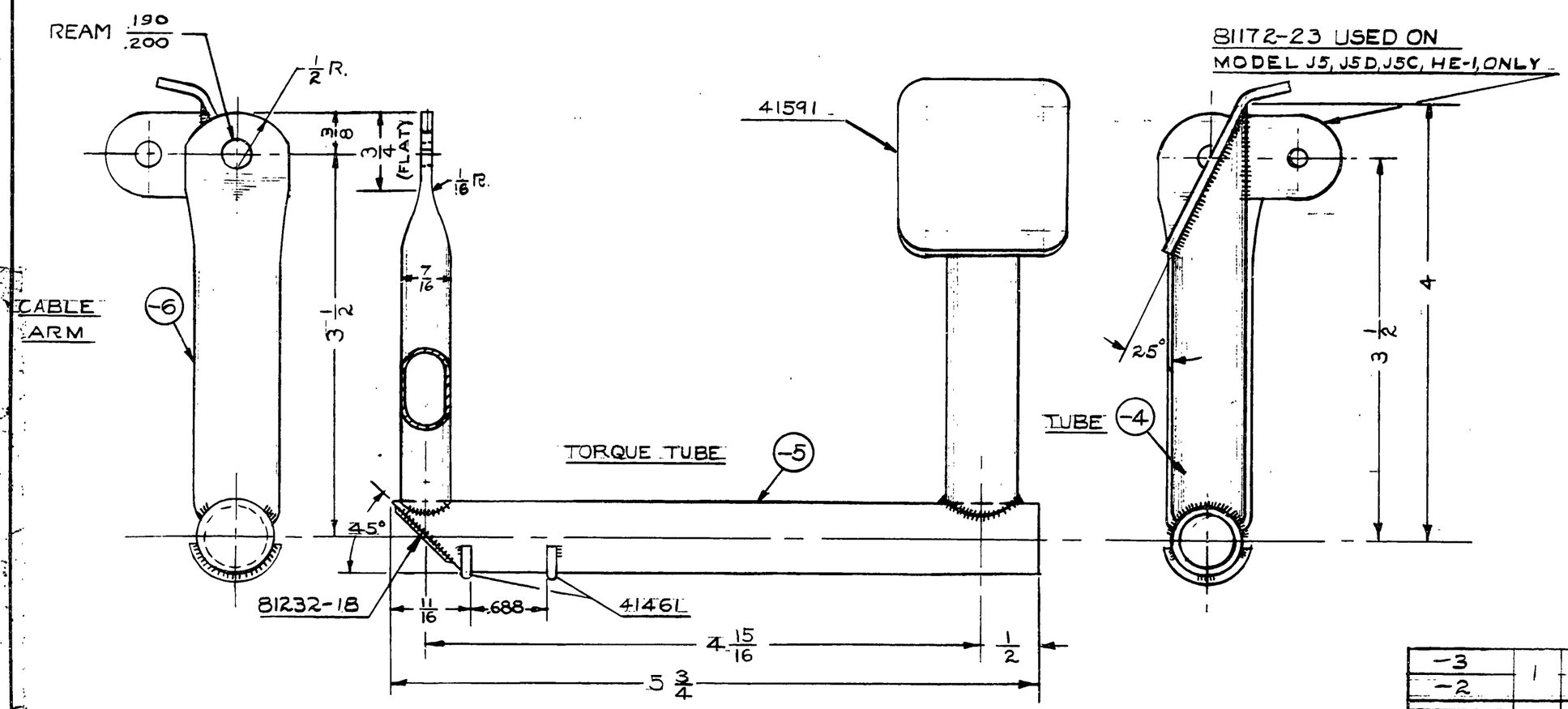

NOTE:

J5, J5C { 41602-L.H. SHOWN
J5D, HE-1 { 41602-1-R.H. BUILT OPPOSITELY

J3, L-4A { 41602-2 L.H. SHOWN
L-4B { 41602-3 R.H. BUILT OPPOSITELY

PARTS MARKED THUS △ ALSO ON 42183 & 42192 MODEL TG-8

LIMITS, SHOP PRACTICES AND FINISH, UNLESS OTHERWISE NOTED, TO BE IN ACCORDANCE WITH PIPER SPECIFICATIONS #9 AND #10.

PART NO.	NO. REQ.	SIZE	DESCRIPTION
		MATERIAL	
-3	1	SAME AS 41602	
-2		LESS 81172-23	
81232-18	1	DISC	
81172-23	1	LUG (J5C, J5, J5D, HE-1 ONLY)	
41591	1	PLATE	
41461	2	STOPS	
-6	1	5/8 x .049 x 3 3/4	#1025 STEEL
-5	1	5/8 x .049 x 5 3/4	#1025 STEEL
-4	1	5/8 x .049 x 3 3/4	#1025 STEEL

SCALE FULL SIZE — TOTAL WT. - LBS.
FINISH

PEDAL ASS'Y. — FRONT BRAKE

MODEL	PER SHIP	NEXT ASSEMBLY	SUPERSEDES	SUP. BY
J5	1L-1R			
HE-1	1L-1R	42373		
J5C	1L-1R	42625		
J5D	1L-1R	42403		
L-4B	1L-1R	41613		
J3-4A	1L-1R	42573		

LET.	REVISION	DATE	BY
M	REDRAWN. NO CHANGE	3-2-44	V.C.

PIPER AIRCRAFT CORP.
LOCK HAVEN, PENNA.

DRAWN	CHECKED	APPROVED
V. CROWLEY 3-3-44	C.K. 3-9-44	

41602

642

A642

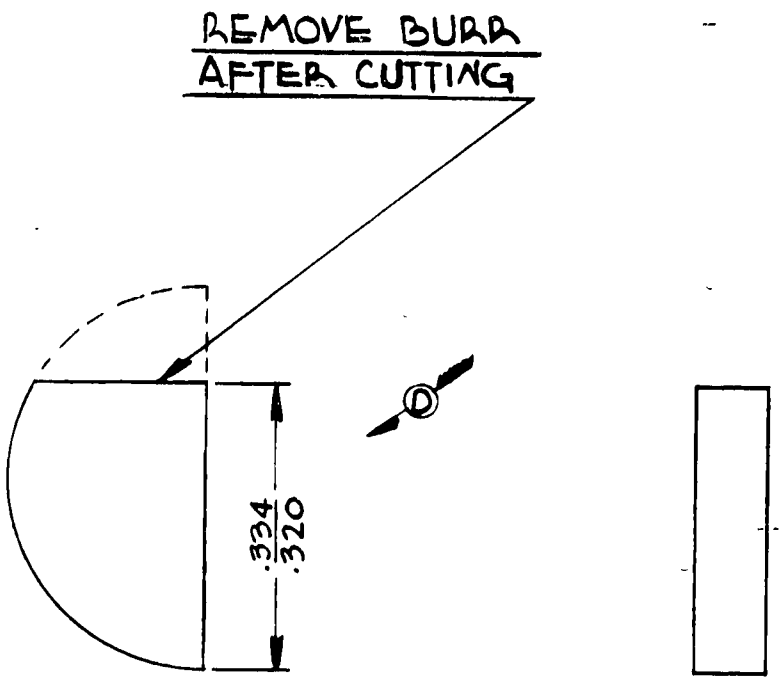

NOTE:
KEY AN280-304
REWORKED AS SHOWN.

E

A B C

				L-14	1	91300			
				HE-1	1	42353			
				J5L-45	1	40813			
				J5L-44	1	42664			
				TG8J50	1	40813			
				J5C	1	42664			
				MODEL	PER PLANE	NEXT ASSEMBLY	-SUPERSEDES	SUP. BY	
F	REDRAWN WITHOUT CHANGE	6-20-51	M.G.						
E	L-14 MODEL REF. ADDED	6-14-45	J.B.M.						
D	.339/.328 WAS 3/8 +.015 -.015	2-4-44	L.M.M.						
C	J5C NEXT ASSY. 42664 WAS 40813	12-14-43	T.D.B.						
B	J5 NEXT ASSY. 42664 WAS 40813	8-23-43	R.E.T.						
A	L-4 A NEXT ASSY. 42664 WAS 40813	7-30-43	R.E.T.						
LET	REVISION	DATE	BY						

THIS DRAWING IS THE PROPERTY OF THE PIPER AIRCRAFT CORP. AND ITS POSSESSION BY UNAUTHORIZED PERSONS SHALL NOT BE CONSTRUED AS PERMISSION TO REPRODUCE FOR SALE IN WHOLE OR IN PART ANY DEVICES SHOWN THEREON.

PIPER AIRCRAFT CORP.
LOCK HAVEN, PENNA.

		NOTED	NOTED
		SIZE	DESCRIPTION
PART NO.	NO. REQ.	MATERIAL	

SCALE 4 x SIZE — TOTAL WT.—LBS.

FINISH—PIPER SPECIFICATION # 10

MANUFACTURING PRACTICES—PIPER SPECIFICATION # 9

KEY— STABILIZER SCREW

DRAFTSMAN	CHECKER	STANDARDS	
M.G.S. 3-24-42	J.C.B. 3-25-42		41631

326

A326

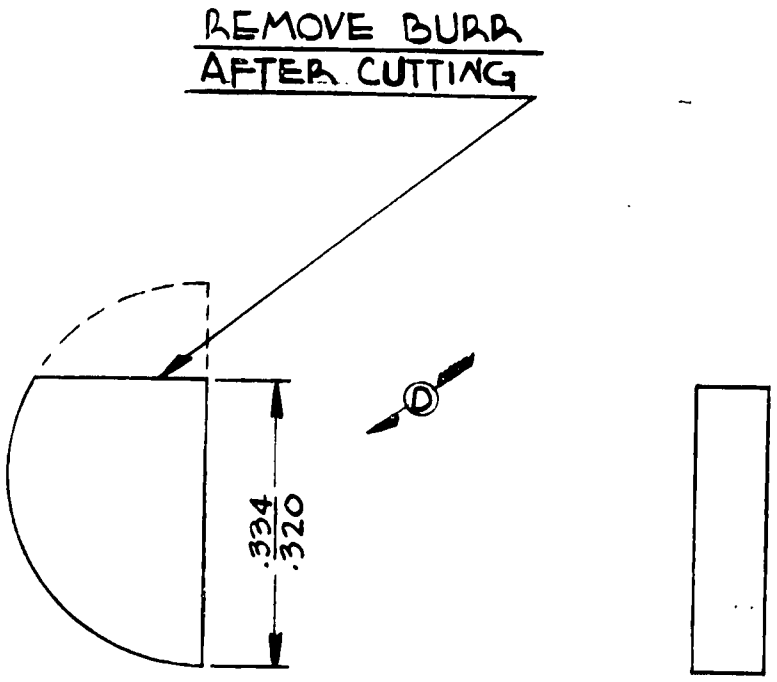

NOTE:
KEY AN280-304
REWORKED AS SHOWN.

E

A B C

LET	REVISION	DATE	BY
F	REDRAWN WITHOUT CHANGE	6-20-51	M.G.
E	L-14 MODEL REF. ADDED	6-14-45	J.B.M.
D	3/8 WAS 3/8 +.015 -.015	2-4-44	L.M.M.
C	J5C NEXT ASSY. 42664 WAS 40813	12-14-43	T.D.B.
B	J3 NEXT ASSY. 42664 WAS 40813	8-23-43	R.E.T.
A	L-4A NEXT ASSY. 42664 WAS 40813	7-30-43	R.E.T.

MODEL	PER PLANE	NEXT ASSEMBLY	SUPERSEDES	SUP. BY
L-14	1	41300		
HE-1	1	42353		
J5L-85	1	40813		
J3L-44	1	42664		
TG8J5B	1	40813		
J5C	1	42664		

THIS DRAWING IS THE PROPERTY OF THE PIPER AIRCRAFT CORP. AND ITS POSSESSION BY UNAUTHORIZED PERSONS SHALL NOT BE CONSTRUED AS PERMISSION TO REPRODUCE FOR SALE IN WHOLE OR IN PART ANY DEVICES SHOWN THEREON.

PIPER AIRCRAFT CORP.
LOCK HAVEN, PENNA.

PART NO.	NO. REQ.	NOTED SIZE	NOTED DESCRIPTION MATERIAL

SCALE 4 x SIZE | TOTAL WT.—LBS.
FINISH—PIPER SPECIFICATION # 10
MANUFACTURING PRACTICES—PIPER SPECIFICATION # 9

KEY—
STABILIZER SCREW

DRAFTSMAN	CHECKER	STANDARDS	
M.G.S. 3-24-42	J.C.B. 3-25-42		**41631**

326

A326

WAS 41333-2

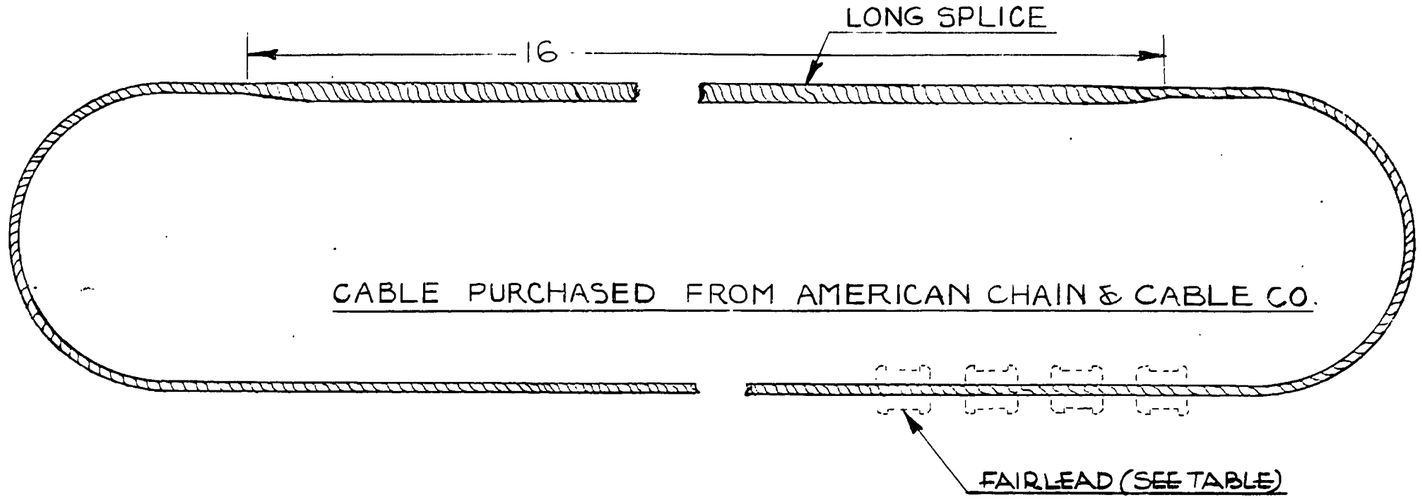

ASS'Y PART NO.	CABLE PART NO.	CIRCUM.	L. BEFORE SPLICING	MATERIAL	FAIRLEAD PART Nº	FAIRLEAD Nº REQ.	REMARKS
	41671-2	308 5/8 ± 1/8	336 3/4 ± 1/8	1/16 DIA. 7x7 GALVANIZED STEEL CABLE			
	41671-3	99 1/2 ± 1/8	122 ± 1/8	1/16 DIA. 7x7 GALVANIZED STEEL CABLE			
41671-5	41671-4	309 3/8 ± 1/8	337 3/8 ± 1/8	1/16 DIA. 7x7 GALVANIZED STEEL CABLE	42911	4	
41671-6	41671-7	309 3/8 ± 1/8	337 3/8 ± 1/8	1/16 DIA. 7x7 FLEXIBLE STAINLESS STEEL AIRCRAFT CABLE	42911	4	USED ON SEAPLANES
	41671-8	308 5/8 ± 1/8	336 3/4 ± 1/8	1/16 DIA. 7x7 FLEXIBLE STAINLESS STEEL AIRCRAFT CABLE			USED ON SEAPLANES
41671-9	41671-10	320 1/8 ± 1/8	354 5/8 ± 1/8	1/16 DIA. 7x7 GALVANIZED STEEL CABLE	42911	2	
	41671-11	260 1/4	288 1/4	1/16 DIA. 7x7 GALVANIZED STEEL CABLE			
	41671-12	315 3/16	343 3/16	1/16 DIA. 7x7 GALVANIZED STEEL CABLE			
	41671-13	310 5/8	338 5/8	1/16 DIA. 7x7 GALVANIZED STEEL CABLE			
	41671-14	260 1/4	288 1/4	1/16 DIA. 7x7 FLEXIBLE STAINLESS STEEL AIRCRAFT CABLE			USED ON SEAPLANES
	41671-15	310 5/8	338 5/8	1/16 DIA. 7x7 FLEXIBLE STAINLESS STEEL AIRCRAFT CABLE			USED ON SEAPLANES
	41671-16	297	325	1/16 DIA. 7x7 GALVANIZED STEEL CABLE			
	41671-17	360	388	1/16 DIA. 7x7 GALVANIZED STEEL CABLE			
	41671-18	297	325	1/16 DIA. 7x7 FLEXIBLE STAINLESS STEEL AIRCRAFT CABLE			USED ON SEAPLANES
	41671-19	360	388	1/16 DIA. 7x7 FLEXIBLE STAINLESS STEEL AIRCRAFT CABLE			USED ON SEAPLANES

LET.	REVISION	DATE	BY
AB	-17, -18 & -19 ADDED	9-11-50	HRK
AA	-16 ADDED	8-31-50	C.K.
Z	-15 ADDED	5-4-50	HRK
Y	315 3/16 WAS 315 3/4 FOR -12	8-18-49	R.R.
X	-14 ADDED	7-28-49	R.R.
W	CIRC. OF -11, 260 1/4 WAS 266 1/2	6-6-49	C.K.
V	-13 ADDED	3-9-49	CEK
U	-12 ADDED	12-7-48	JCB
T	-11 ADDED	8-11-48	R.M.
S	FOR-9, 326 3/4 WAS 335, 354 5/8 WAS 363	8-21-47	R.M.
R	41671-9 ADDED	5-20-47	RC
Q	REDRAWN & REVISED	3-25-47	I.D.B.

THIS DRAWING IS THE PROPERTY OF THE PIPER AIRCRAFT CORP. AND ITS POSSESSION BY UNAUTHORIZED PERSONS SHALL NOT BE CONSTRUED AS PERMISSION TO REPRODUCE FOR SALE, IN WHOLE OR IN PART. ANY DEVICES SHOWN THEREON.

MODEL	PER PLANE	NEXT ASSEMBLY	SUPERSEDES	SUP. BY

PIPER AIRCRAFT CORP.
LOCK HAVEN, PENNA.

42911	SEE TABLE	FAIRLEAD
PART No.	No. REQ.	NAME / MATERIAL

SCALE | TOTAL WT.—LBS.

FINISH—PIPER SPECIFICATION #10

MANUFACTURING PRACTICES—PIPER SPECIFICATION #9

CABLE ~ STABILIZER ADJUSTMENT

I. D. B.	R. D. M.		41671
2-25-47	2-26-47		
DRAFTSMAN	CHECKER	STANDARDS	

643

A643

PART NO.	L
41723-2	117
41723-8	88

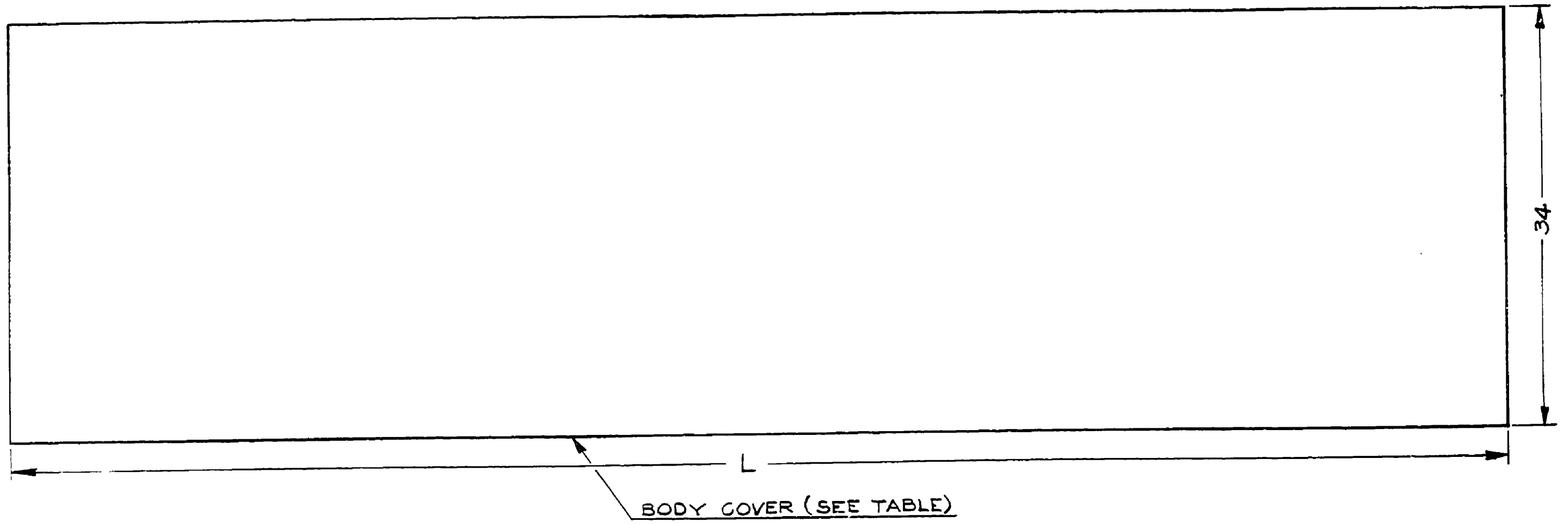

EDGE OF DISC MAY BE PINKED



(-3) FABRIC DISC

CUT AS SHOWN
4 REQ.

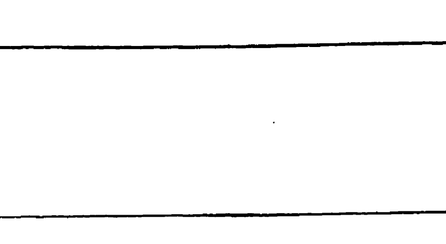

(-4) FABRIC HALF-DISC

(-6) BULKHEAD COVER

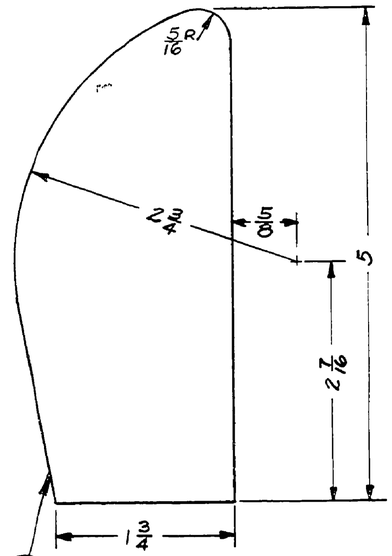

(-5) END COVER

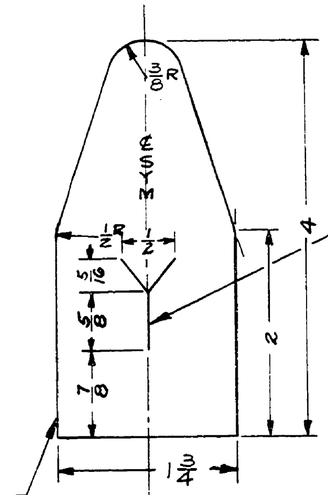

CUT AS SHOWN

(-7) FABRIC STRIP

-8	-	34 x 88
-7	-	1 3/4 x 4
-6	-	2 5/16 x 3 7/16
-5	-	2 1/8 x 5
-4	-	1 3/4 x 3 1/2
-3	-	1 1/2 x 1 1/2
-2	-	34 x 117
	NO. REQ.	SIZE — DESCRIPTION

FABRIC
SAE SPEC. #AMS 3806

PART No. — MATERIAL

SCALE FULL SIZE & NOTED | TOTAL WT.-LBS.

FINISH—PIPER SPECIFICATION #10

MANUFACTURING PRACTICES—PIPER SPECIFICATION #9

FABRIC—AILERON

THIS DRAWING IS THE PROPERTY OF THE PIPER AIRCRAFT CORP. AND ITS POSSESSION BY UNAUTHORIZED PERSONS SHALL NOT BE CONSTRUED AS PERMISSION TO REPRODUCE FOR SALE, IN WHOLE OR IN PART, ANY DEVICES SHOWN THEREON

MODEL	PER PLANE	NEXT ASSEMBLY	SUPERSEDES	SUP. BY

LET.	REVISION	DATE	BY
AD	REDRAWN & REVISED	6-18-51	C.B.

PIPER AIRCRAFT CORP.
LOCK HAVEN, PENNA.

DRAFTSMAN	CHECKER	STANDARDS
C.E.B. 6-18-51	H.R.K. 6-19-51	

41723

A809

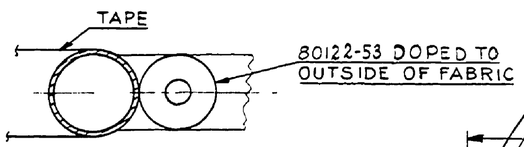

SECTION **E-E**
FULL SIZE

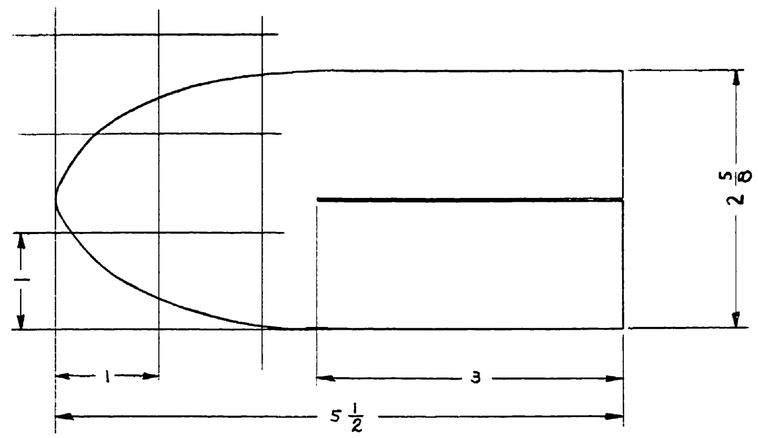

-2 DETAIL
FULL SIZE

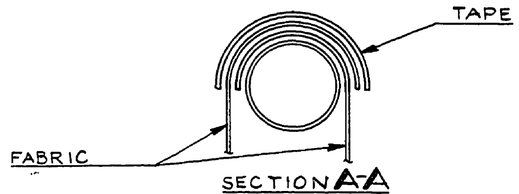

SECTION **A-A**
FULL SIZE

SECTION **C-C**
FULL SIZE

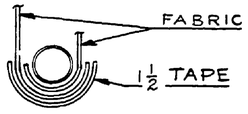

SECTION **B-B**
FULL SIZE

SECTION **D-D**
FULL SIZE

NOTE:
FABRIC DOPED TO FRAME AND OVERLAPPED SEAMS DOPED AND COVERED WITH PINKED TAPE AS SHOWN. (OVERLAP NOT LESS THAN 1 IN.)
PARTS MARKED [L] USED ON LEFT SIDE ONLY.
PARTS MARKED [R] USED ON RIGHT SIDE ONLY.

PART No.	NO. REQ.	SIZE	DESCRIPTION MATERIAL
	1	84 L	BARBOURS #7 STITCHING CORD
	14	3/8 - 3/4	HERRINGBONE WEAVE COTTON TAPE
	1	1 1/2 x 104	PINKED TAPE-SAE SPEC #AMS 3804
	1	2 x 100	
80122-53	2		WASHER
41742-1	1		FABRIC ASSY
41742	1		
41723-3	14		DISC
41313	1		RUDDER ASSY.
-2	2	2 5/8 x 5 1/2	FABRIC-SAE. SPEC #AMS 3806

THIS DRAWING IS THE PROPERTY OF THE PIPER AIRCRAFT CORP. AND ITS POSSESSION BY UNAUTHORIZED PERSONS SHALL NOT BE CONSTRUED AS PERMISSION TO REPRODUCE FOR SALE, IN WHOLE OR IN PART, ANY DEVICES SHOWN THEREON

SCALE 3 IN. = 1 FT. & NOTED | TOTAL WT.-LBS.

FINISH—PIPER SPECIFICATION #10

MANUFACTURING PRACTICES—PIPER SPECIFICATION #9

LET.	REVISION	DATE	BY
U	REDRAWN & REVISED	6-19-51	C.K.

MODEL	PER PLANE	NEXT ASSEMBLY	SUPERSEDES	SUP. BY

PIPER AIRCRAFT CORP.
LOCK HAVEN, PENNA.

RUDDER ASSEMBLY—COVERED

DRAFTSMAN	CHECKER	STANDARDS
C. E. K. 6-19-51	H. R. K. 6-19-51	

41733

810

A810

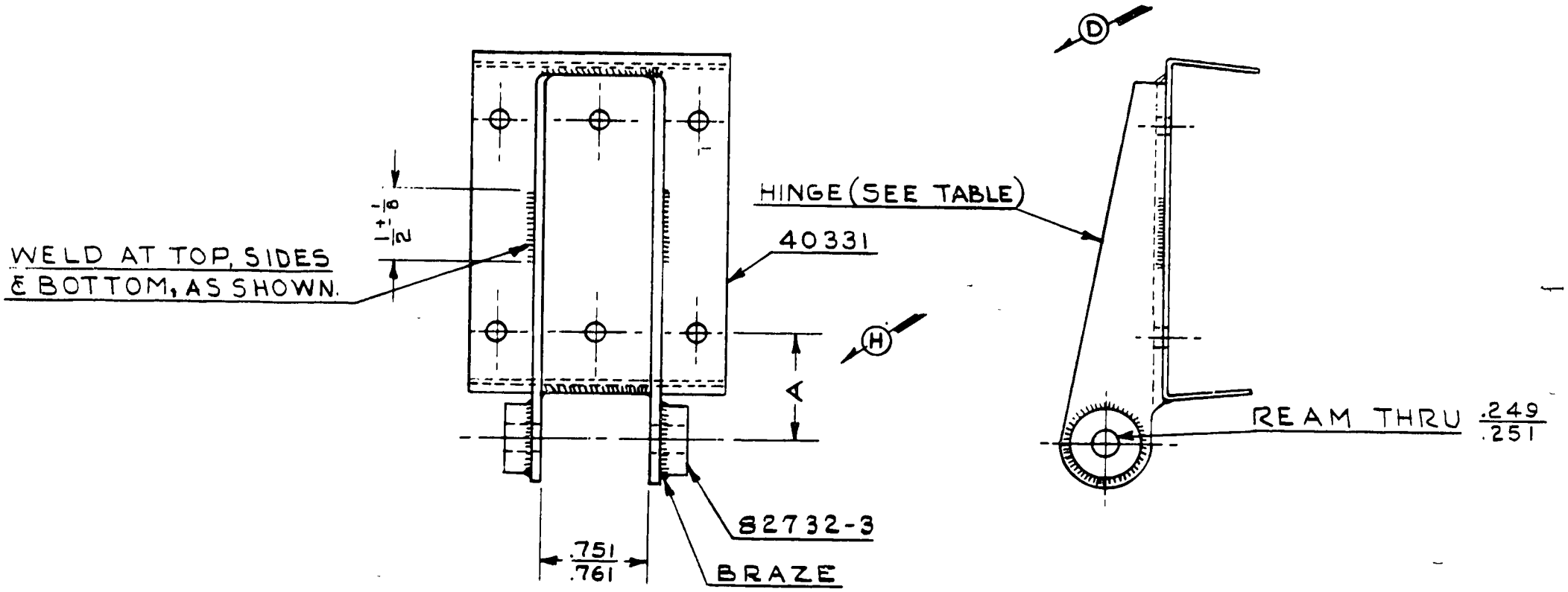

ASSY. NO.	A	HINGE NO.
41881	3/4	40371
41881-2	1 7/16	11679

J F G

PART NO.	NO. REQ.	NAME / MATERIAL
82732-3	2	BUSHING
11679	1	HINGE (SEE TABLE)
40371		
40331	1	HINGE PLATE

SCALE FULL SIZE | TOTAL WT.—LBS.

FINISH—PIPER SPECIFICATION # 10

MANUFACTURING PRACTICES—PIPER SPECIFICATION # 9

MODEL	PER PLANE	NEXT ASSEMBLY	SUPERSEDES	SUP. BY
L-14	2	90140, 90139		
L-50, 50A	4	42555	40381	
J3	4	42585	40381	
L-4B	4	42585	40381	
L-4A	4	42585	40381	

LET	REVISION	DATE	BY
K	REDRAWN WITHOUT CHANGE	6-14-51	I.M.M.
J	41881-2 & TABLE ADDED	1-21-48	H.R.K
H	.313 DIM. REM. 3/4 DIM. ADDED	10-21-46	C.E.K
G	TITLE REVISED	2-28-45	E.L.N.
F	L-14 MODEL REF. ADDED	2-28-45	E.L.N
E	HOLE NOTE REMOVED	12-12-44	H.M.Z
D	.129 HOLE ADDED	9-7-43	L.R.
C	REDRAWN & REVISED	4-29-43	R.E.T.

THIS DRAWING IS THE PROPERTY OF THE PIPER AIRCRAFT CORP. AND ITS POSSESSION BY UNAUTHORIZED PERSONS SHALL NOT BE CONSTRUED AS PERMISSION TO REPRODUCE FOR SALE IN WHOLE OR IN PART ANY DEVICES SHOWN THEREON.

PIPER AIRCRAFT CORP.
LOCK HAVEN, PENNA.

HINGE ASSEMBLY—AILERON

DRAFTSMAN	CHECKER	STANDARDS
R.E.T. 4-29-43	L.E.K. 5-3-43	

41881



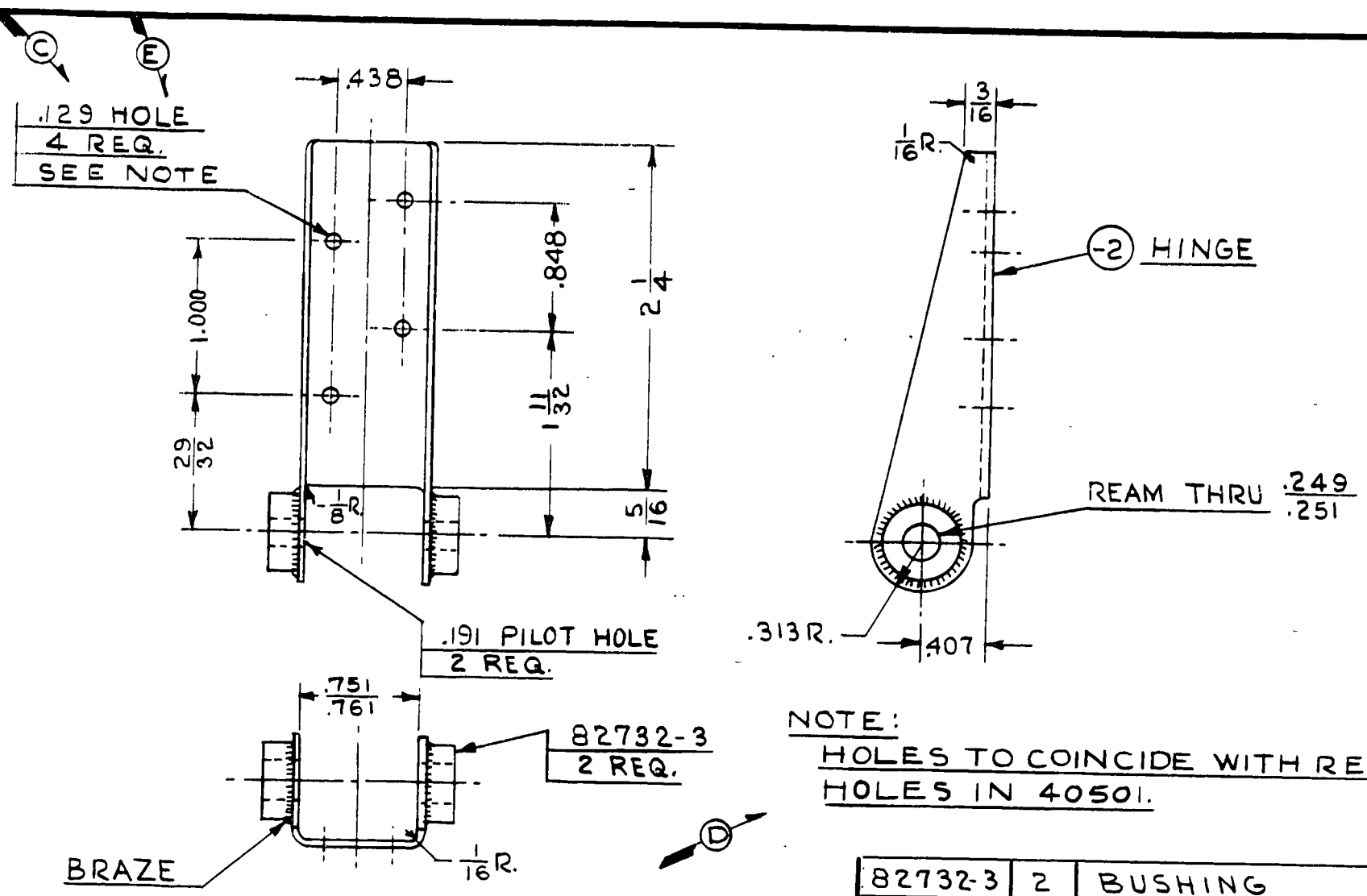

NOTE:
HOLES TO COINCIDE WITH RELATED HOLES IN 40501.

PART NO.	NO. REQ.	SIZE	DESCRIPTION
82732-3	2	BUSHING	
-2	1	.045 x 2 1/8 x 2 7/8	#1025 STEEL
		MATERIAL	

SCALE FULL SIZE | TOTAL WT.—LBS.

FINISH—PIPER SPECIFICATION # 10

MANUFACTURING PRACTICES—PIPER SPECIFICATION # 9

MODEL	PER PLANE	NEXT ASSEMBLY	SUPERSEDES	SUP. BY
L-4B	2	42585	40541	
J3L4A	2	42585	40541	

LET	REVISION	DATE	BY
F	REDRAWN WITHOUT CHANGE	6-14-51	I.M.M.
E	.129 HOLE WAS .129 PILOT HOLE	11-26-43	F.J.D.
D	NOTE ADDED	10-28-43	R.E.S.
C	.129 HOLE WAS .089 HOLE	9-6-43	L.R.
B	REDRAWN & REVISED	4-29-43	M.G.S.

THIS DRAWING IS THE PROPERTY OF THE PIPER AIRCRAFT CORP. AND ITS POSSESSION BY UNAUTHORIZED PERSONS SHALL NOT BE CONSTRUED AS PERMISSION TO REPRODUCE FOR SALE IN WHOLE OR IN PART ANY DEVICES SHOWN THEREON.

PIPER AIRCRAFT CORP.
LOCK HAVEN, PENNA.

HINGE ASSEMBLY— AILERON CENTER

DRAFTSMAN	CHECKER	STANDARDS
M.G.S. 4-29-43	L.E.K. 5-4-43	

41891

A328

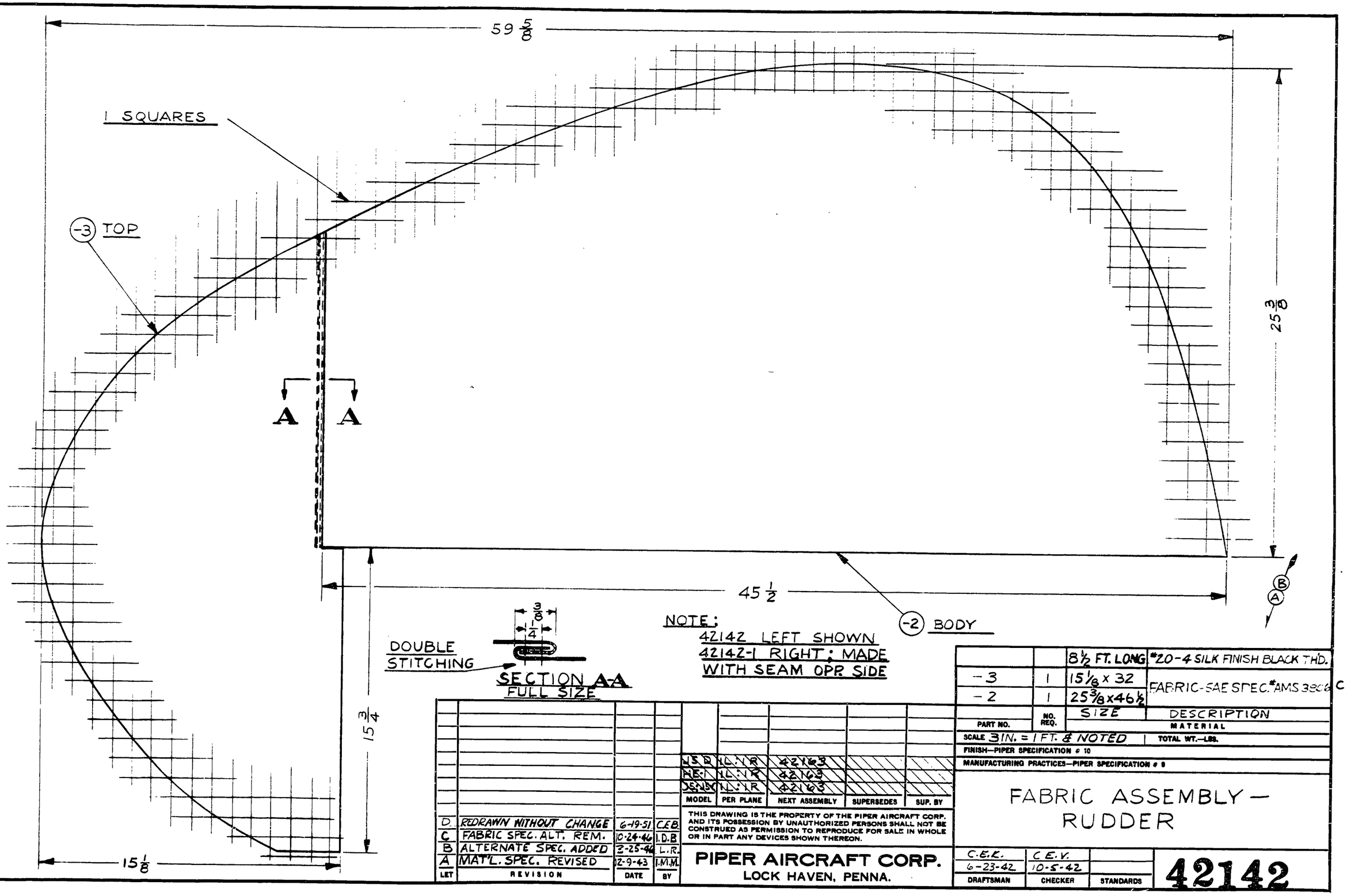

		8½ FT. LONG	*20-4 SILK FINISH BLACK THD.
-3	1	15⅛ x 32	FABRIC-SAE SPEC. *AMS 3806 C
-2	1	25⅜ x 46½	
PART NO.	NO. REQ.	SIZE	DESCRIPTION MATERIAL

SCALE 3 IN. = 1 FT. & NOTED | TOTAL WT.—LBS.

FINISH—PIPER SPECIFICATION # 10

MANUFACTURING PRACTICES—PIPER SPECIFICATION # 9

MODEL	PER PLANE	NEXT ASSEMBLY	SUPERSEDES	SUP. BY
J5D	NL-1R	42163		
HE-1	NL-1R	42163		
J5/J5A	NL-1R	42163		

LET	REVISION	DATE	BY
D	REDRAWN WITHOUT CHANGE	6-19-51	C.E.B.
C	FABRIC SPEC. ALT. REM.	10-24-46	I.D.B.
B	ALTERNATE SPEC. ADDED	2-25-44	L.R.
A	MAT'L. SPEC. REVISED	12-9-43	I.M.M.

THIS DRAWING IS THE PROPERTY OF THE PIPER AIRCRAFT CORP. AND ITS POSSESSION BY UNAUTHORIZED PERSONS SHALL NOT BE CONSTRUED AS PERMISSION TO REPRODUCE FOR SALE IN WHOLE OR IN PART ANY DEVICES SHOWN THEREON.

PIPER AIRCRAFT CORP.
LOCK HAVEN, PENNA.

FABRIC ASSEMBLY — RUDDER

DRAFTSMAN	CHECKER	STANDARDS
C.E.K. 6-23-42	C.E.V. 10-5-42	

42142

A644

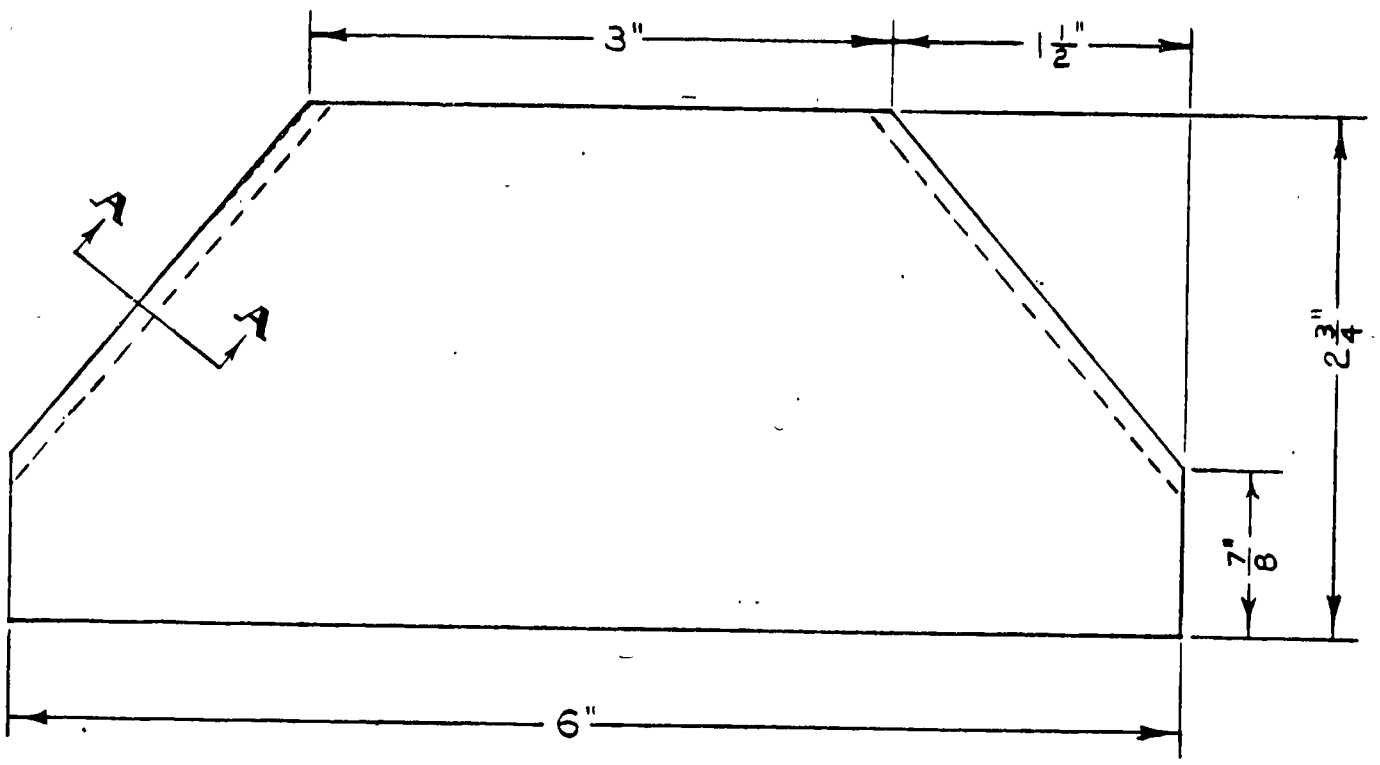



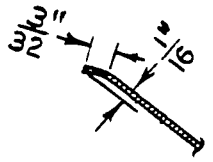

SECTION A-A

Ⓒ

Ⓓ Ⓑ Ⓐ

LIMITS. SHOP PRACTICES AND FINISH. UNLESS OTHERWISE NOTED, TO BE IN ACCORDANCE WITH PIPER SPECIFICATIONS #9 AND #10.

MODEL	PER SHIP	NEXT ASSEMBLY	SUPERSEDES	SUPERSEDED BY
L-14	12	90032, 90033, 90047, 90049		
TG-8	4	40514	81362-2	
L4B	4	42585	81362-2	
J3L-4A	4	42585	81362-2	
J5D, J5C	8	42566	81362-2	
J5 MIL	8	40444	81362-2	

LET.	REVISION	DATE	SR.	BY
D	L-14 MODEL REF. ADDED	3-6-45		I.M.M.
C	3S-½ H. ALUM. WAS 2S-H ALUM	3-2-43		R.E.T.
B	42585 WAS 40514 FOR J3, L4A, L4B	2-22-43		R.E.S.
A	42555 WAS 40444 FOR J5C, J5D,	1-1-43		R.R.F.

NO. 105-M ALBANENE A. & B. SMITH CO., PGH., PA.

PIPER AIRCRAFT CORP.
LOCK HAVEN, PENNA.

PART NO.	No. REQ.	SIZE	MATERIAL
		.020"X2¾"X6"	3S-½H. ALUM.

SCALE FULL SIZE

PLATE-AILERON REINFORCEMENT

R.E.S.	J.S.B.		
9-16-42	9-16-42		
DRAWN	CHECKED	APPROVED	

42491

329

A329

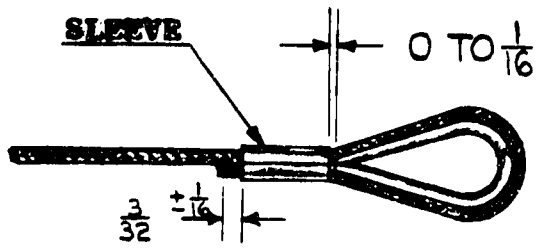

1/16 & 3/32 DIA. CABLE: USE SINGLE PRESS METHOD OF SPLICING. SEE NOTE

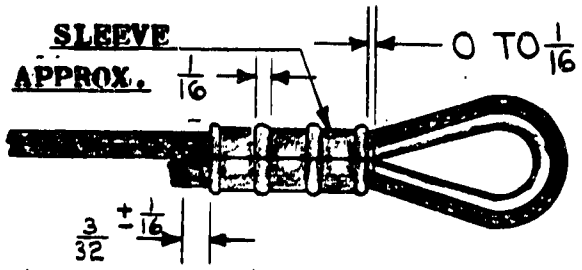

1/8 DIA. CABLE: USE TRIPLE PRESS METHOD OF SPLICING WITH HAND TOOL; MAKE CENTER PRESS FIRST.

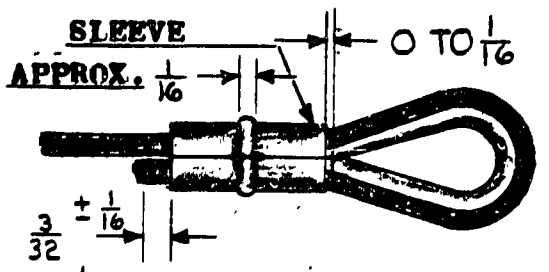

1/8 DIA. CABLE: USE DOUBLE PRESS METHOD OF SPLICING WITH FOOT OPERATED MACHINE. TOOL: MICROPRESS 101 WITH WIDE JAW. PRESS PART OF SLEEVE AWAY FROM THIMBLE FIRST.

"GO" GAUGE & SLEEVE NO.	CABLE SIZE	CABLE STRANDING	TOOL
18-1-C	1/16 DIA.	7 X 7	51-C-887
18-3-M	1/8 DIA.	7 X 19	51-M
18-3-M	1/8 DIA.	1 X 19	51-M
18-2-G	3/32 DIA.	6×7	51-G-887

NOTES:
ENDS OF THIMBLES TRIMMED SEE FIG. 1.
SLEEVE PURCHASED FROM:
THE NATIONAL TELEPHONE SUPPLY CO.
CLEVELAND, OHIO.
SEE TABLE FOR PART NO'S.
SINGLE PRESS METHOD, WITH COMPRESSED AIR OPERATED TOOL, MAYBE USE ON 1/8 DIA. CABLE.

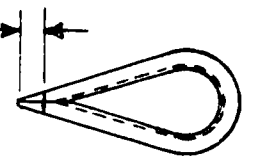

FIG. 1

LIMITS, SHOP PRACTICES AND FINISH. UNLESS OTHERWISE NOTED, TO BE IN ACCORDANCE WITH PIPER SPECIFICATIONS #9 AND #10.

LET	REVISION	DATE	BY
M	"GO" GAUGE WAS LISTED WITH TOOL & NOTE ADDED.	6-27-47	RC
L	3/32 DIA. CABLE ADDED TO NOTE	9-16-46	L.R.
K	ADDED SLEEVE NO. 18-2-G	9-16-46	L.R.
J	REDRAWN & [illegible]	[illegible]	RDR

MODEL	PER SHIP	NEXT ASSEMBLY	SUPERSEDES	SUP. BY
ALL		30041		
		31061		
		31062		
		40123		

PIPER AIRCRAFT CORP.
LOCK HAVEN, PENNA.

PART NO.	No. REQ.	MATERIAL

SCALE FULL SIZE | TOTAL WT. - LBS.
FINISH

SPLICE—
CABLE SLEEVE

DRAWN	CHECKED	APPROVED
R. REEDER 3-22-44	R.E.T. 3-22-44	

42521

530

A330

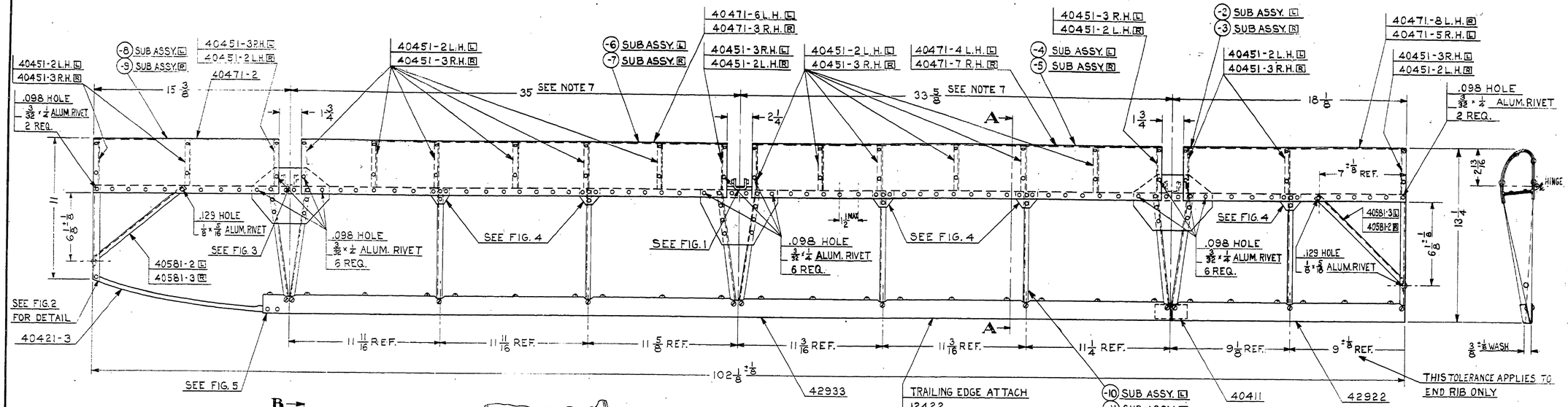

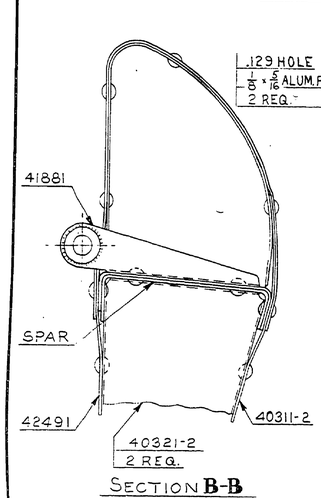

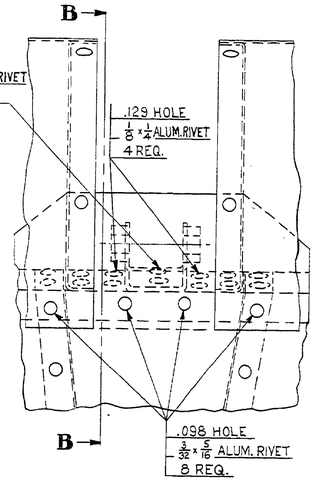

SECTION **B-B**

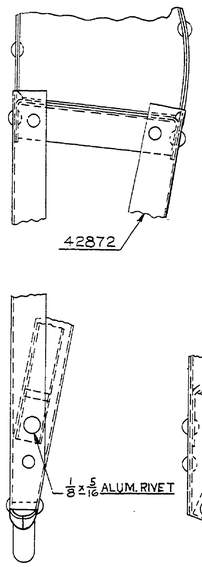

FIG. 2
DETAIL AT TIP RIB
FULL SIZE

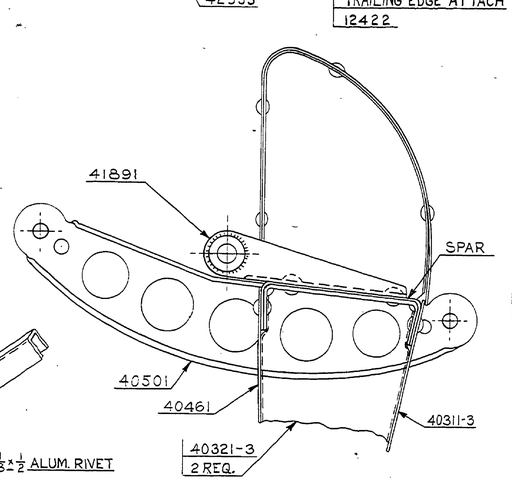

SECTION **C-C**

FIG. 1
DETAIL AT CENTER HINGE
FULL SIZE

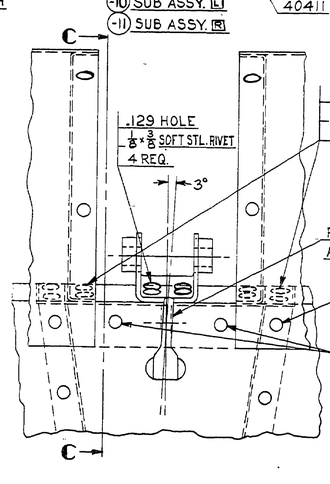

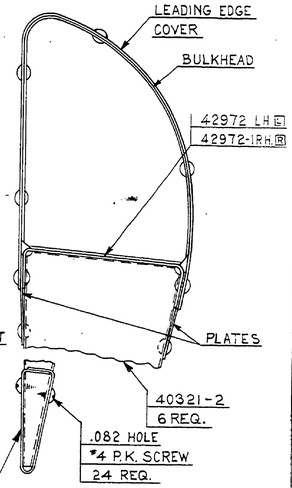

SECTION **A-A**
TYPICAL CROSS SECTION
FULL SIZE

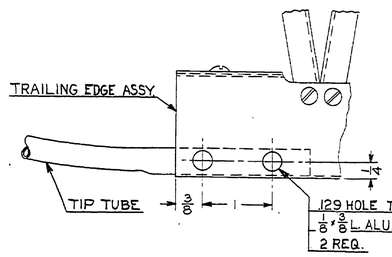

FIG. 5
TIP TUBE INST.
FULL SIZE

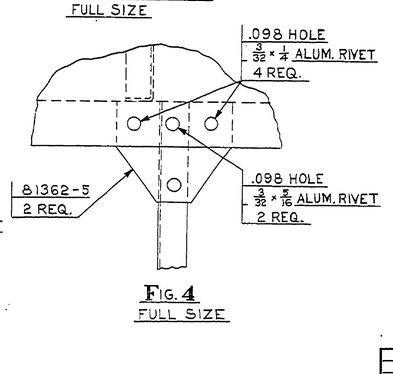

FIG. 4
FULL SIZE

ASSY. NO.	REMARKS
42585	L.H. SHOWN
42585-1	R.H. OPPOSITE
42585-12	L.H. SHOWN & CUT AS NOTED IN FIG. 1
42585-13	R.H. OPP. & CUT AS NOTED IN FIG. 1

NOTES:

1. PARTS MARKED (L) USED ON LEFT ASSEMBLY ONLY. PARTS MARKED (R) USED ON RIGHT ASSEMBLY ONLY.
2. CENTER HINGE INSTALLED TO LINE WITH INBOARD AND OUTBOARD HINGES.
3. ALL RIVETS TO BE SPACED APPROXIMATELY AS SHOWN.
4. UNLESS OTHERWISE NOTED ALL RIVETS ARE 3/32 x 3/16 SOFT ALUMINUM. .098 HOLE.
5. ALL BULKHEAD FLANGES SHALL FACE OUTBOARD EXCEPT AT AILERON ENDS AND CUTOUTS. CORRESPONDING RIBS SHALL FACE INBOARD.
6. ALL PARTS TO THIS ASSEMBLY MUST BE INSTALLED SO THAT NO SHARP EDGES, CORNERS OR BULGES SHALL PROTRUDE BEYOND THE FABRIC LINE.
7. AILERON HINGE CENTERS MUST COINCIDE WITH CENTERS OF RELATED PARTS ON WING ASSEMBLY.
8. .098 HOLES DRILLED THRU LEADING EDGE COVER AND BULKHEADS 40451-2 & 40451-3 ON ASSEMBLY SPACED APPROXIMATELY AS SHOWN IN SECTION C-C.

NO. REQ.	SIZE	DESCRIPTION
*4	24	1/4 LONG TYPE A STOVE HD. P.K. SCR
	4	1/8 x 3/8 LONG RD HD. SOFT STL. RIVET
	1	1/8 x 1/2 LONG
	2	1/8 x 3/8 LONG
	8	1/8 x 5/16 LONG BRAZIER HD.
	8	1/8 x 1/4 LONG SOFT. ALUM.
	4	3/32 x 3/8 LONG RIVET
	38	3/32 x 5/16 LONG
	42	3/32 x 1/4 LONG
	240	3/32 x 3/16 LONG
12422	1	TRAILING EDGE ATTACHMENT
81362-5	10	PLATE
42972-1	1	SPAR
42972		
42933	1	TRAILING EDGE
42922	1	TIP RIB ASSEMBLY
42872	1	REINFORCEMENT PLATE
42491	2	HINGE ASSEMBLY
41891	1	
41881	2	
40581-3	1	BRACE
40581-2	1	
40501	1	HORN ASSEMBLY
40471-5	1	LEADING EDGE COVER
40471-8		
40471-7		
40471-4		
40471-3		
40471-6		
40471-2	1	
40461	1	REINFORCEMENT PLATE
40451-3	4 (L) 16 (R)	BULKHEAD
40451-2	16 (L) 4 (R)	
40421-3	1	TIP TUBE
40411	1	REINFORCEMENT
40321-3	2	RIB
40321-2	10	
40311-3	1	REINFORCEMENT PLATE
40311-2	2	
-11		CONSISTS OF 42872, 41891, 40501, 42972-1, 2 OF 40321-3, 41881, 4 OF 40451-2, 40451-3, 10 OF 40321-2, 4 OF 1/8 x 3/8 STEEL RIVETS, 4 OF 1/8 x 5/16 ALUM. RIVETS 8 OF 1/8 x 1/4 RIVETS, 36 OF 3/32 x 5/16 RIVETS.
-10		CONSISTS OF 42872, 41891, 40501, 42972, 2 OF 40321-3, 41881, 4 OF 40451-2, 40451-3, 10 OF 40321-2, 4 OF 1/8 x 3/8 STL. RIVETS, 4 OF 1/8 x 5/16 ALUM. RIVETS 8 OF 1/8 x 1/4 RIVETS, 36 OF 3/32 x 5/16 RIVETS.
-9		CONSISTS OF 40451-3, 40471-2 & 4 OF 3/32 x 3/16 RIVETS
-8		CONSISTS OF 40451-2, 40471-2 & 4 OF 3/32 x 3/16 RIVETS
-7	-	CONSISTS OF 40471-3, 5 OF 40451-3 & 20 OF 3/32 x 3/16 RIVETS
-6		CONSISTS OF 40471-6, 5 OF 40451-2 & 20 OF 3/32 x 3/16 RIVETS
-5		CONSISTS OF 40471-7, 5 OF 40451-3 & 20 OF 3/32 x 3/16 RIVETS
-4		CONSISTS OF 40471-4, 5 OF 40451-2 & 20 OF 3/32 x 3/16 RIVETS
-3		CONSISTS OF 40451-3, 40471-8 & 4 OF 3/32 x 3/16 RIVETS
-2		CONSISTS OF 40451-2, 40471-5 & 4 OF 3/32 x 3/16 RIVETS

PART NO. / MATERIAL

SCALE 3 IN. = 1 FT. & NOTED — TOTAL WT.–LBS.

FINISH–PIPER SPECIFICATION #10

MANUFACTURING PRACTICES–PIPER SPECIFICATION #9

MODEL	PER PLANE	NEXT ASSEMBLY	SUPERSEDES	SUP. BY

THIS DRAWING IS THE PROPERTY OF THE PIPER AIRCRAFT CORP. AND ITS POSSESSION BY UNAUTHORIZED PERSONS SHALL NOT BE CONSTRUED AS PERMISSION TO REPRODUCE FOR SALE, IN WHOLE OR IN PART, ANY DEVICES SHOWN THEREON.

LET.	REVISION	DATE	BY
AA	REDRAWN & REVISED	4-10-50	HRK

PIPER AIRCRAFT CORP.
LOCK HAVEN, PENNA.

DRAFTSMAN	CHECKER	STANDARDS
H. R. K. 4-10-50	C. E. K. 5-16-50	

AILERON ASSEMBLY

42585

Philadelphia Blue Print Co. 150 8-1-46

A882

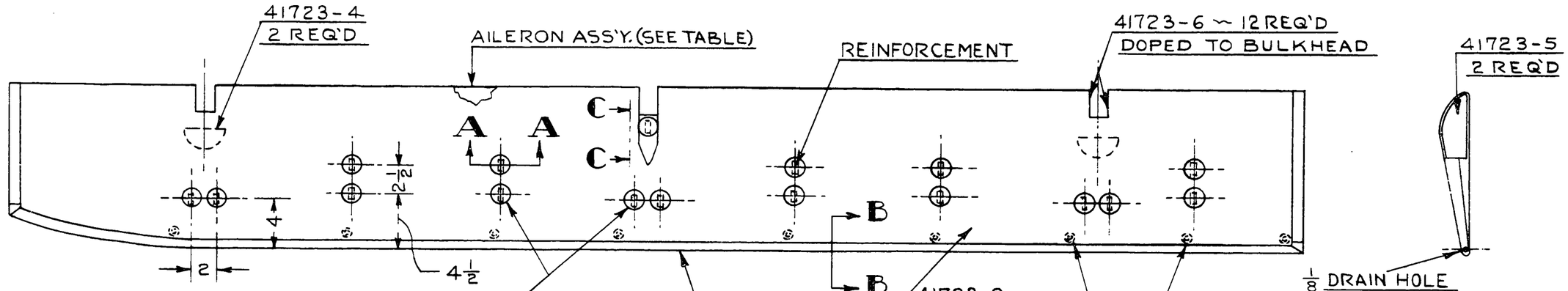

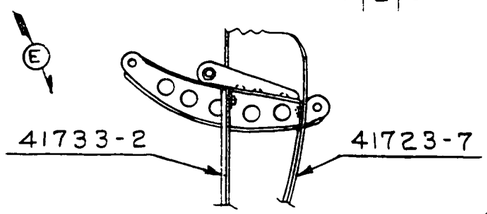

SECTION C-C
3 IN. = 1 FT.

COVERED AILERON NO.	AILERON NO.
42592 L.H.	42585
42592-1 R.H. OPP.	42585-1
42592-2 L.H.	42585-12
42592-3 R.H. OPP.	42585-13

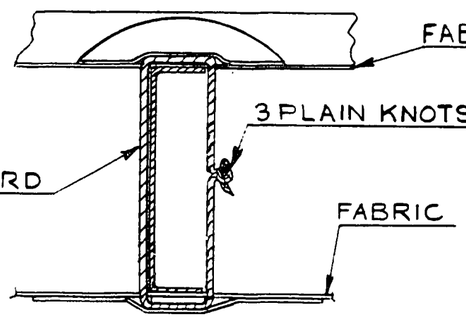

SECTION A-A
FULL SIZE



SECTION B-B
FULL SIZE

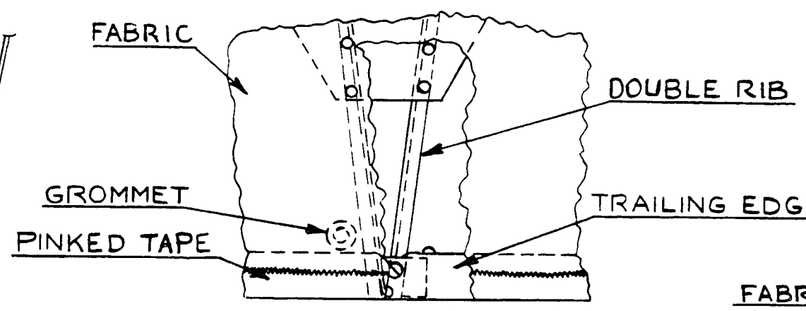

FIG. 1
APPROX. LOCATION OF DRAIN GROMMET AT DOUBLE RIBS
SCALE 3" = 1 FT.

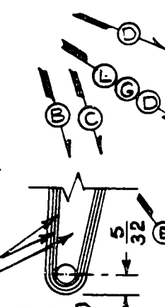

FIG. 2
FULL SIZE

NOTES:
FABRIC & TAPE DOPED TO FRAME AS SHOWN

PARTS MARKED L USED ON LEFT SIDE ONLY
PARTS MARKED R USED ON RIGHT SIDE ONLY

LET.	REVISION	DATE	BY
M	RE DRAWN WITHOUT CHANGE	5-25-51	I.M.M.
L	ALTERNATE TAPE SPEC. ADDED	3-6-50	H.R.K.
K	-2, -3, CANCELLED	4-1-48	R.M.
J	-2, & -3 ADDED	11-11-47	R.C.
H	PINKED TAPE SPEC. ALT. REM.	10-28-46	I.D.B.
G	ALTERNATE SPEC. ADDED	3-25-46	L.R.
F	SEC. C-C ADDED	11-26-45	C.E.K.
E	10F 41723-7 REM, 41733-2 ADDED	11-23-45	I.M.M.
D	MAT'L. SPEC. REVISED	12-15-43	I.M.M.
C	5/32 WAS 1/4	9-9-43	F.J.D.
B	NOTE REV. FIG. 2 ADDED	5-7-43	F.J.D.
A	NOTE REMOVED	3-18-43	I.D.B.

THIS DRAWING IS THE PROPERTY OF THE PIPER AIRCRAFT CORP. AND ITS POSSESSION BY UNAUTHORIZED PERSONS SHALL NOT BE CONSTRUED AS PERMISSION TO REPRODUCE FOR SALE, IN WHOLE OR IN PART, ANY DEVICES SHOWN THEREON

MODEL	PER PLANE	NEXT ASSEMBLY	SUPERSEDES	SUP. BY
L4B	1	13411	41712	
L4A	1	13411	41712	
J3	1	13411, 16851	41712	

PIPER AIRCRAFT CORP.
LOCK HAVEN, PENNA.

PART NO.	NO. REQ.	SIZE	DESCRIPTION / MATERIAL
42585-13 42585-12	1	AILERON ASS'Y	(SEE TABLE)
41723-7	1	FABRIC STRIP	
	32	3/8 x 3/4 LONG	COTTON HERRINGBONE WEAVE TAPE
	16	7 IN. LONG	BARBOURS #75 STICHING CORD
	1	2 x 165 LONG	PINKED TAPE SAE SPEC. AMS3804-AR AMS 3806
80122-53	9	GROMMET	
42585 42585-1	1	AILERON ASS'Y	(SEE TABLE)
41733-2	1	FABRIC REINFORCEMENT	
41723-6	12	BULKHEAD COVER	
41723-5	2	END COVER	
41723-4	2	FABRIC HALF-DISC	
41723-3	34	FABRIC DISC.	
41723-2	1	BODY COVER	

SCALE 1 1/2 = 1 FT. & NOTED — TOTAL WT.—LBS.
FINISH—PIPER SPECIFICATION #10
MANUFACTURING PRACTICES—PIPER SPECIFICATION #9

AILERON ASSEMBLY—COVERED

DRAFTSMAN	CHECKER	STANDARDS
R. FRANK 1-18-43	L.E.K. 1-21-43	

42592

A645

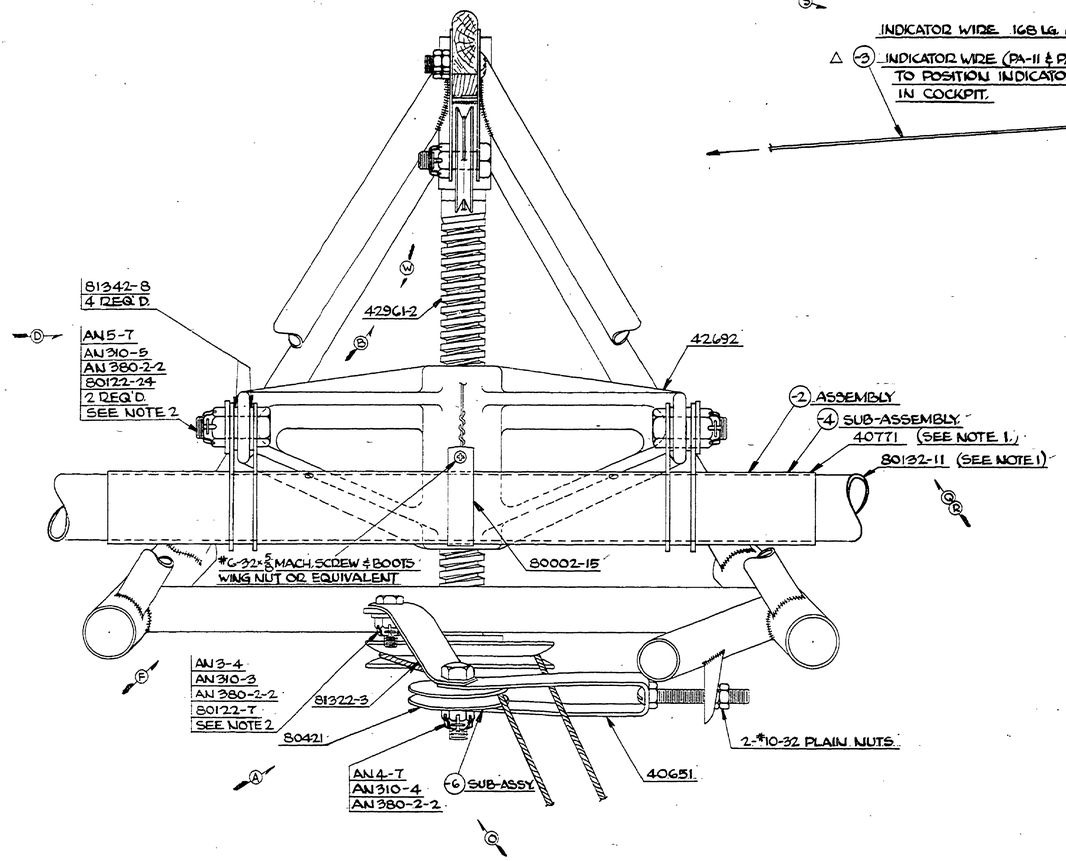

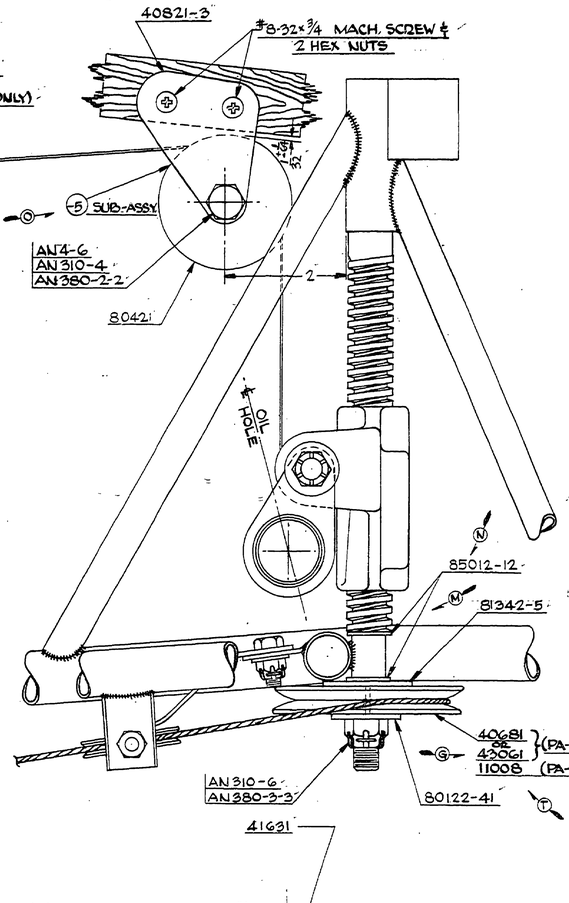

NOTE: 1. PARTS 80132-11 & 40771 ARE INDIVIDUALLY FITTED TO A SLIDING FIT.

2. WHERE 'SEE NOTE 2' IS INDICATED, ELASTIC STOP NUTS (TYPE 22 M OR 42 E) MAY BE USED.

△ 3. WHERE MODEL PA-18 IS NOTED, THE MODEL PA-18 SPECIAL (COMPLETE AIRPLANE 12966) ALSO APPLIES.

PARTS MARKED △ ALSO ON S1300 (MODEL L-14)

SECTION THRU PULLEY

	1	.018×4GB	ST. ST. 18-8S TYPE 304 HARD DRAWN, BRIGHT FINISH (PA-14 ONLY)	
△ -3	1	.018×156	ST. ST. 18-8S TYPE 304 HARD DRAWN, BRIGHT FINISH (PA-11, PA-12, & PA-18 ONLY)	H,L
-6	–		SUB-ASSY. CONSISTS OF 80421, 40651 81322-3, AN4-7, AN310-4 & AN380-2-2	
-5	–		SUB-ASSY CONSISTS OF 80421, AN4-6, AN310-4, AN380-2-2, & 2 OF 40821-3	
40681 OR 43061	1		PULLEY (PA-11 & PA-12 ONLY)	G
#6-32	1		BOOTS WING NUT OR EQUIVALENT	F
-4	–		SUB-ASSY. CONSISTS OF 40771 & 80132-11	
#8-32	4		HEX NUT	
41631	1		KEY	
#10-32	2		HEX NUT	
81322-3	1		LINK	
81342-8	4		WASHERS	
81342-5	1			
80122-24	2			
80122-41	1			
80122-T	1			
80421	2		PULLEY	
80002-15	1		CLAMP	
40821-3	2		PULLEY FITTING	
42692	1		YOKE ASSEMBLY	
40771	1		LINK ASSEMBLY	M
80132-11	1		LINER TUBE	
42961-2	1		SCREW	B
△ 11008	1		PULLEY (PA-14, PA-18, & PA-19 ONLY)	
40651	1		IDLER YOKE ASSY.	
-2	–		ASSY OF 42961-2, 42692, -4, 80002-15, & BOLTS, NUTS, WASHERS, COTTERS	L, M, G, V, U
85012-12	2		WASHER	
AN380-3-3	1		COTTER PIN	
AN380-2-2	5			
AN310-6	1		NUTS	
AN310-5	2			
AN310-4	2			
AN310-3	1			
AN5-7	2		BOLTS	D
AN4-7	1			
AN4-6	1			
AN3-4	1			
#8-32	2	3/4 LONG	RD. HD. MACH. SCREW	
#6-32	1	5/8 LONG	RD. HD. MACH. SCREW	
PART NO.	NO. REQ.	SIZE	DESCRIPTION / MATERIAL	

SCALE FULL SIZE — TOTAL WT.—LBS.

FINISH—PIPER SPECIFICATION #10

MANUFACTURING PRACTICES—PIPER SPECIFICATION #9

MODEL	PER PLANE	NEXT ASSEMBLY	SUPERSEDES	SUP. BY
J5C	1	24186	40618	
J3	1	24146	40618	
J4A	1	24226	40618	

THIS DRAWING IS THE PROPERTY OF THE PIPER AIRCRAFT CORP. AND ITS POSSESSION BY UNAUTHORIZED PERSONS SHALL NOT BE CONSTRUED AS PERMISSION TO REPRODUCE FOR SALE, IN WHOLE OR IN PART, ANY DEVICES SHOWN THEREON.

REVISION	DATE	BY
N 85012-12 WAS AN960-616	3-14-44	CEK
M 1 OF AN960-616 ADDED	2-25-44	DAW
L 1-14 N.A.S. 1300 ADDED FOR -2	6-14-45	MM
K MAT'L SPEC. REV. FOR -3	2-27-45	LDB
J 1-43AN4-24226 WAS 29656	6-26-44	LDB
H 0184156 WAS .010×156	5-3-44	VCP
G 43061 ADDED	4-2-44	MM
F BOOTS WING NUT OR EQUIV. WAS BOOTS NUT	3-20-44	V.C.
E J5C MODEL REF. ADDED	1-21-43	LDB
D AN5-7 WAS 84611-7	11-13-43	R.F.
C J3 MODEL REF. ADDED	8-26-43	RET
B 42961 WAS 40691	5-25-43	RET
A PART NO. 80421 ADDED	3-7-43	WCT
LET. REVISION	DATE	BY

REVISION	DATE	BY
W 42961-2 WAS 42961	5-24-50	C.L.
V PA-18 DEF. ADDED	8-22-49	R.M.
U PA-19 DEF. ADDED	5-3-49	F.E.N.
T 11008 ADDED	2-6-47	R.D.R.
S 11.0 WIDE FOR PA-14 ADDED	6-2-47	L.E.L.
R 80132-11 WAS 8600-240	4-28-47	TNE
Q 86002-40 WAS 80132-11	2-27-47	L.D.B.
P NOTE 2 ADDED	6-18-46	
O -58-6 SUB-ASSY. ADDED	4-29-46	HMZ
Z REDRAWN WITHOUT CHANGE	6-5-51	MWG
Y NOTE 3 ADDED	9-12-50	F.E.S.
X REDRAWN WITHOUT CHANGE	4-25-50	C.L.
LET. REVISION	DATE	BY

PIPER AIRCRAFT CORP.
LOCK HAVEN, PENNA.

R.E.T.	I.E.L.		
2-12-43	3-24-43		
DRAFTSMAN	CHECKER	STANDARDS	

MECHANISM INSTALLATION— STABILIZER ADJUSTMENT

42664

A883

PHILADELPHIA BLUE PRINT CO.

883

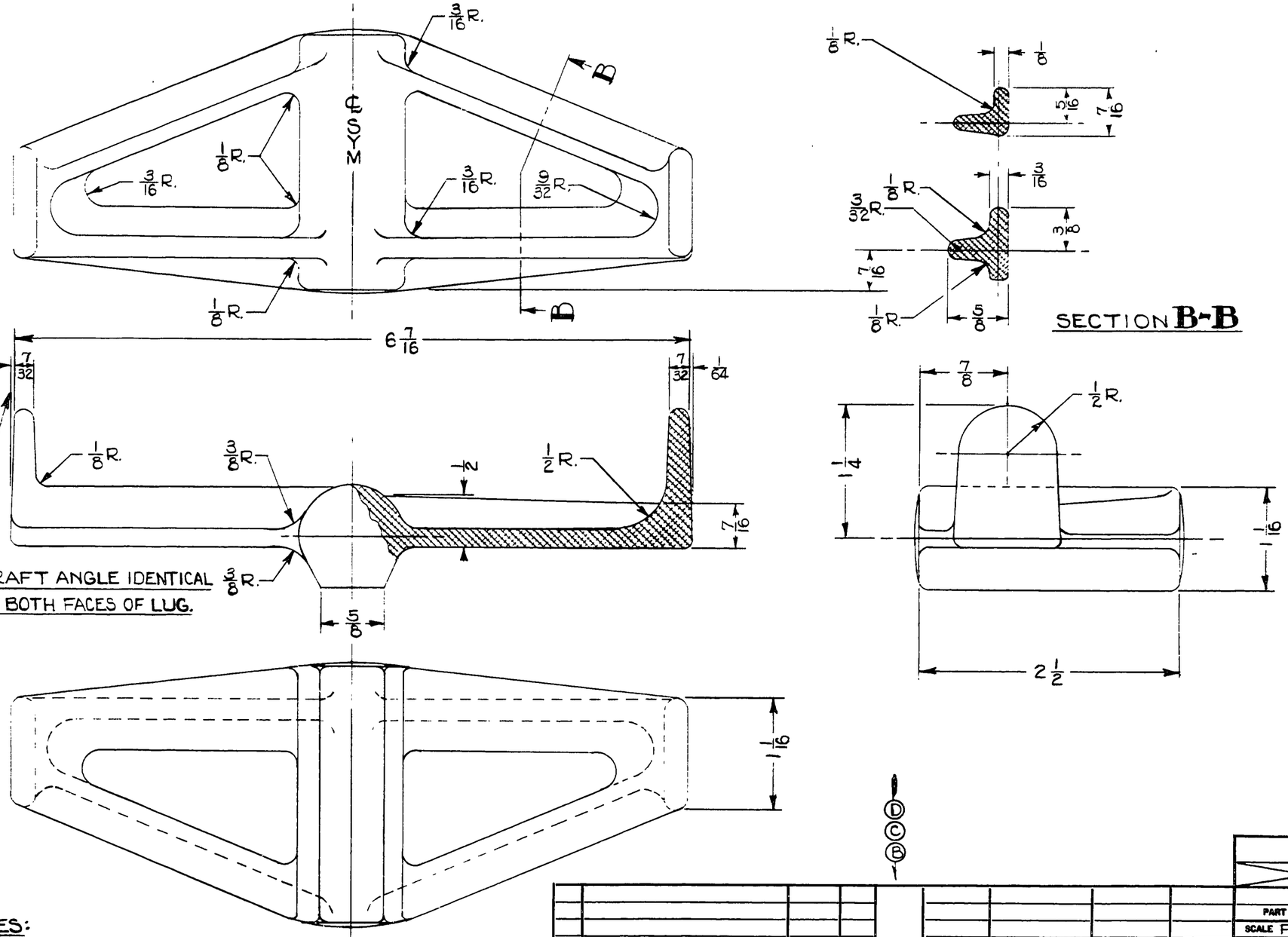

NOTES:

ALL DRAFT ANGLES ARE 3° EXCEPT AS NOTED.
SMALL UNMARKED RADII ARE 1/16 INCH.
CASTING TOLERANCE = ± 1/32 INCH. (A)
FOR FINISHED CASTING SEE DWG. 42682.

LET	REVISION	DATE	BY
E	REDRAWN WITHOUT CHANGE	6-21-51	L.E.M.
D	L-14 MODEL REF. ADDED	3-7-45	J.B.M.
C	J5C MODEL REF. ADDED	12-22-43	I.D.B.
B	J3 MODEL REF. ADDED	8-23-43	R.E.T.
A	CASTING TOL. ± 1/32 WAS ± 1/32 - 1/64	8-9-43	C.E.K.

MODEL	PER PLANE	NEXT ASSEMBLY	SUPERSEDES	SUP. BY
L-14	1	42682		
J5C	1	42682	42452	
J3 M	1	42682	42452	

THIS DRAWING IS THE PROPERTY OF THE PIPER AIRCRAFT CORP. AND ITS POSSESSION BY UNAUTHORIZED PERSONS SHALL NOT BE CONSTRUED AS PERMISSION TO REPRODUCE FOR SALE IN WHOLE OR IN PART ANY DEVICES SHOWN THEREON.

PIPER AIRCRAFT CORP.
LOCK HAVEN, PENNA.

PART NO.	NO. REQ.	MATERIAL
	NOTED	ALCOA 195T6 OR EQUIV.
	SIZE	DESCRIPTION

SCALE FULL SIZE | TOTAL WT.—LBS.
FINISH—PIPER SPECIFICATION # 10
MANUFACTURING PRACTICES—PIPER SPECIFICATION # 9

YOKE-STABILIZER (CASTING)

DRAFTSMAN	CHECKER	STANDARDS
R.E.T. 2-10-43	L.E.K. 2-10-43	

42672

A646

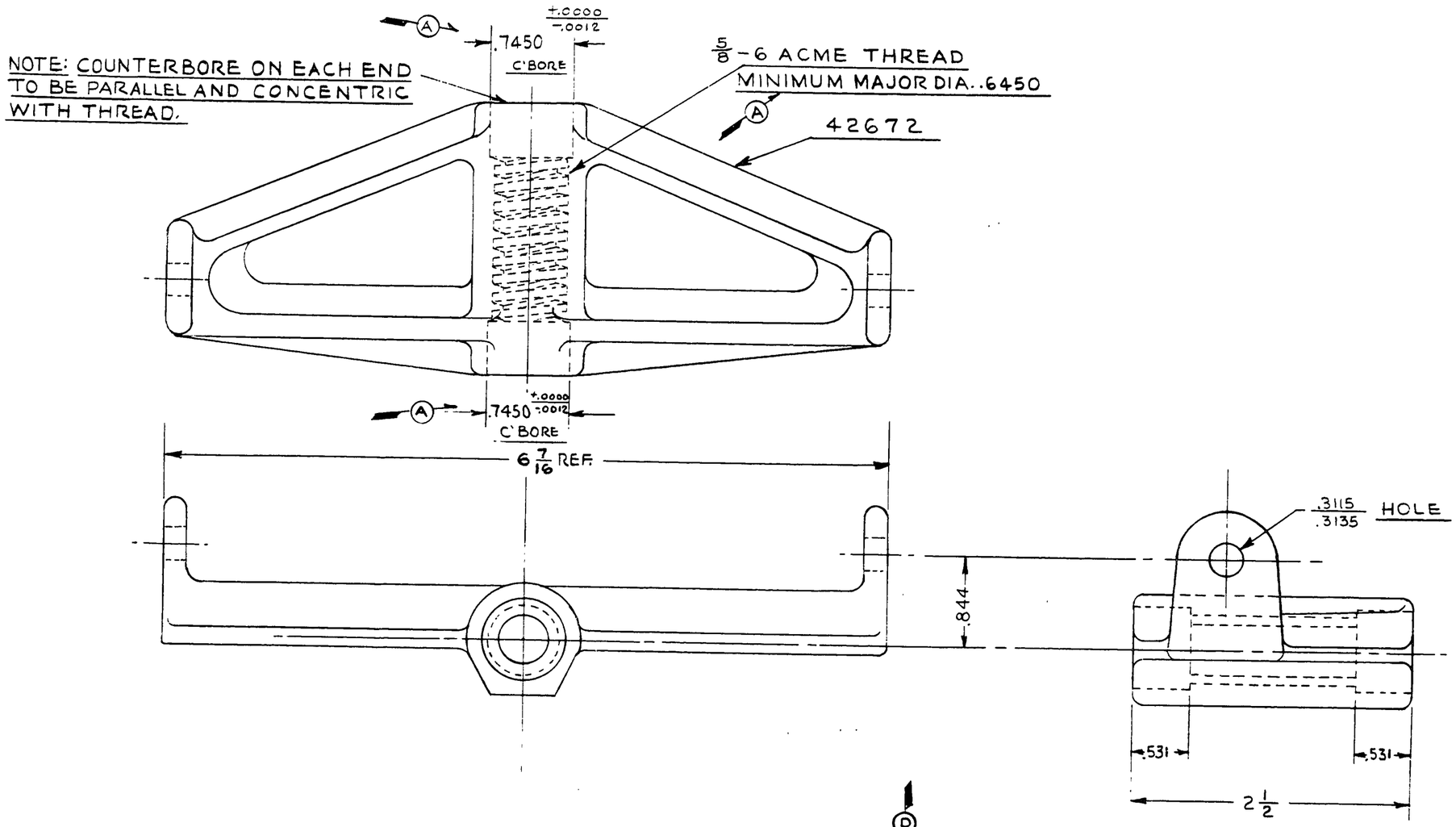

MODEL	PER PLANE	NEXT ASSEMBLY	SUPERSEDES	SUP. BY
L-14	1	42692		
J5C	1	42692	40782	
J3-J4A	1	42692	40782	

LET	REVISION	DATE	BY
E	REDRAWN WITHOUT CHANGE	6-21-51	I.M.M.
D	L-14 MODEL REF. ADDED	7-9-45	J.B.M.
C	J5C MODEL REF. ADDED	12-22-43	I.D.B.
B	J3 MODEL REF. ADDED	8-23-43	R.E.T.
A	DIM'S REVISED; NOTE ADDED	8-6-43	C.E.K.

THIS DRAWING IS THE PROPERTY OF THE PIPER AIRCRAFT CORP. AND ITS POSSESSION BY UNAUTHORIZED PERSONS SHALL NOT BE CONSTRUED AS PERMISSION TO REPRODUCE FOR SALE IN WHOLE OR IN PART ANY DEVICES SHOWN THEREON.

PIPER AIRCRAFT CORP.
LOCK HAVEN, PENNA.

PART NO.	NO. REQ.	NAME / MATERIAL
42672	1	STAB. YOKE CASTING

SCALE FULL SIZE | TOTAL WT.—LBS.
FINISH—PIPER SPECIFICATION # 10
MANUFACTURING PRACTICES—PIPER SPECIFICATION # 9

YOKE—STABILIZER
(FINISHED)

DRAFTSMAN	CHECKER	STANDARDS
R.E.T. 2-8-43	L.E.K. 2-25-43	

42682

647

A647

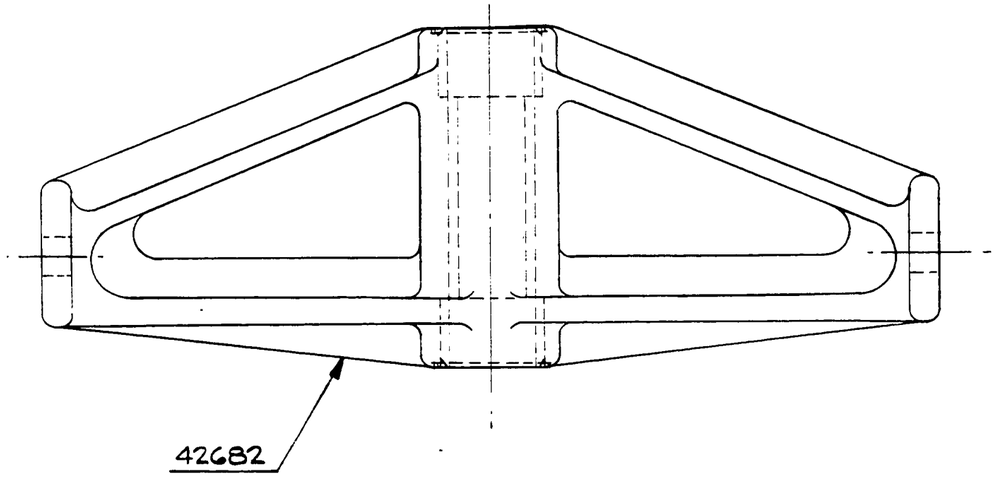

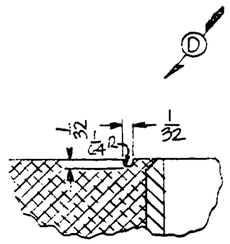

SECTION B-B
TWICE SIZE

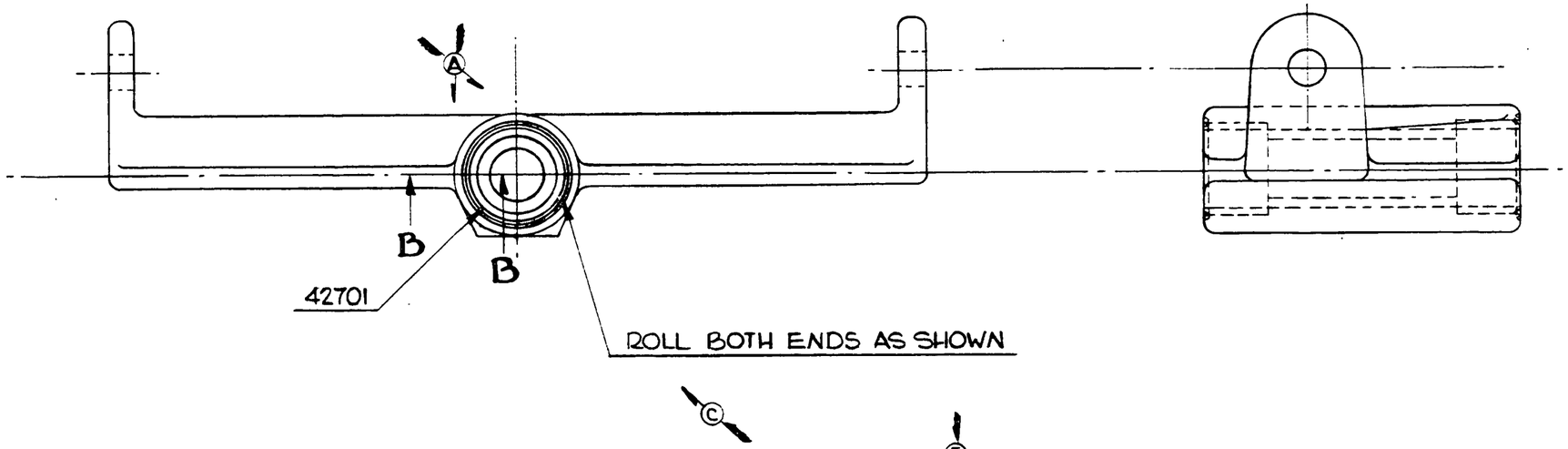

				L-14	N	42664			
				J5C	N	42664	40791		
G	REDRAWN WITHOUT CHANGE	6-21-51	M.G.	J3K-4A	N	42664	40791		
F	L-14 MODEL REF. ADDED	7-3-45	J.B.M.	MODEL	PER PLANE	NEXT ASSEMBLY	SUPERSEDES	SUP. BY	
E	J5C MODEL REF. ADDED	12-22-43	I.D.B.						
D	SEC. A-A REM.; SEC. B-B REVISED	11-16-43	L.R.						
C	ROLL WAS PEEN	11-16-43	L.R.						
B	J3 MODEL REF. ADDED	8-23-43	R.E.T.						
A	SECTIONS 'A-A' & B-B ADDED	7-30-43	R.E.T.						
LET	REVISION	DATE	BY						

THIS DRAWING IS THE PROPERTY OF THE PIPER AIRCRAFT CORP. AND IT'S POSSESSION BY UNAUTHORIZED PERSONS SHALL NOT BE CONSTRUED AS PERMISSION TO REPRODUCE FOR SALE IN WHOLE OR IN PART ANY DEVICES SHOWN THEREON.

PIPER AIRCRAFT CORP.
LOCK HAVEN, PENNA.

PART NO.	NO. REQ.	MATERIAL
42701	2	BUSHING
42682	1	FINISHED YOKE

SCALE FULL SIZE & NOTED — TOTAL WT.—LBS.
FINISH—PIPER SPECIFICATION # 18
MANUFACTURING PRACTICES—PIPER SPECIFICATION # 9

YOKE ASSEMBLY—STABILIZER

DRAFTSMAN	CHECKER	STANDARDS
R.E.T. 2-10-43	L.E.K. 2-25-43	

42692

645

A648

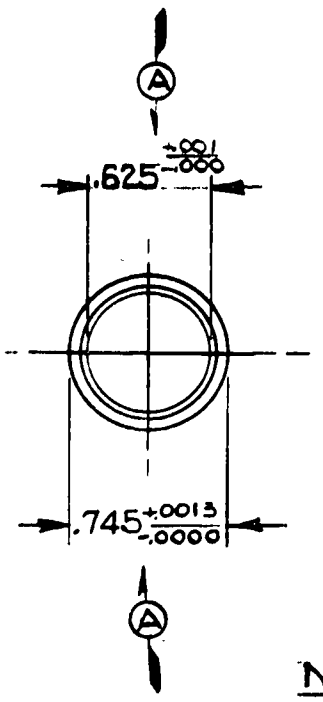

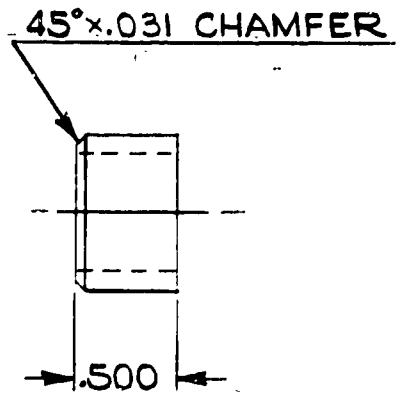

NOTE:

1. HEAT TREAT & HARDEN TO 45-55 ROCKWELL C.

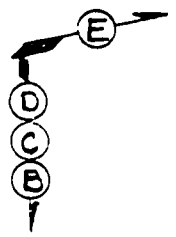

LET	REVISION	DATE	BY
F	REDRAWN WITHOUT CHANGE	6-21-51	L.E.K.
E	NOTE ADDED, MAT'L SPEC. REV.	12-8-50	H.R.K.
D	L-14 MODEL REF. ADDED	7-3-45	J.B.M.
C	J5C MODEL REF. ADDED	12-22-43	L.D.B.
B	J3 MODEL REF. ADDED	8-23-43	R.E.T.
A	DIMENSIONS REVISED	6-6-43	C.E.K.

MODEL	PER PLANE	NEXT ASSEMBLY	SUPERSEDES	SUP. BY
L-14	2	42692		
J5C	2	42692	40801	
J3L-7A	2	42692	40801	

THIS DRAWING IS THE PROPERTY OF THE PIPER AIRCRAFT CORP. AND ITS POSSESSION BY UNAUTHORIZED PERSONS SHALL NOT BE CONSTRUED AS PERMISSION TO REPRODUCE FOR SALE IN WHOLE OR IN PART ANY DEVICES SHOWN THEREON.

PIPER AIRCRAFT CORP.
LOCK HAVEN, PENNA.

PART NO.	NO. REQ.	SIZE	DESCRIPTION / MATERIAL
		.745x.060x1/2	4130, 8630 OR EQUIV. ST'L.

SCALE FULL SIZE | TOTAL WT.—LBS.

FINISH—PIPER SPECIFICATION # 10

MANUFACTURING PRACTICES—PIPER SPECIFICATION # 9

BUSHING - STABILIZER YOKE

DRAFTSMAN	CHECKER	STANDARDS	
R.E.T. 2-6-43	L.E.K. 2-25-43		42701

331

A331

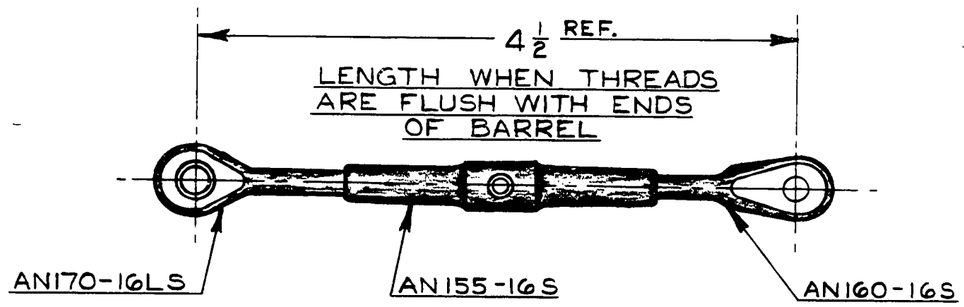

AN170-16LS	1	EYE	
AN160-16S	1	FORK	
AN155-16S	1	BARREL	
PART No.	No. REQ.	NAME	MATERIAL

LIMITS, SHOP PRACTICES AND FINISH. UNLESS OTHERWISE NOTED, TO BE IN ACCORDANCE WITH PIPER SPECIFICATIONS #9 AND #10.

SCALE FULL SIZE | TOTAL WT.-LBS.

FINISH

TURNBUCKLE ASS'Y.

LET.	REVISION	DATE	BY
J	L-14 PER SHIP 8 WAS 3	6-14-45	J.B.M.
H	L-14 N.A.S. 91083 & 90395 WAS 90398	6-14-45	J.B.M.
G	L-14 MODEL REF. ADDED	3-22-45	I.D.B.
F	REDRAWN & REVISED	2-5-45	R.D.R.

MODEL	PER SHIP	NEXT ASSEMBLY	SUPERSEDES	SUP. BY
L-14	8	90397, 90396		
		91083, 90395		
J5C	1	40123		
L-4A	6	40123		
J3	8	40123		

PIPER AIRCRAFT CORP.
LOCK HAVEN, PENNA.

DRAWN	CHECKED	APPROVED
R. REEDER 2-5-45	R.E.T. 2-5-45	

42722

649

A649

B

FINISH AFTER WELDING
TO DIM. SHOWN
MIN. WIDTH OF FLAT AREA
FROM EDGE OF HOLE 1/16

82732-28
REAM .249/.251 AFTER WELDING

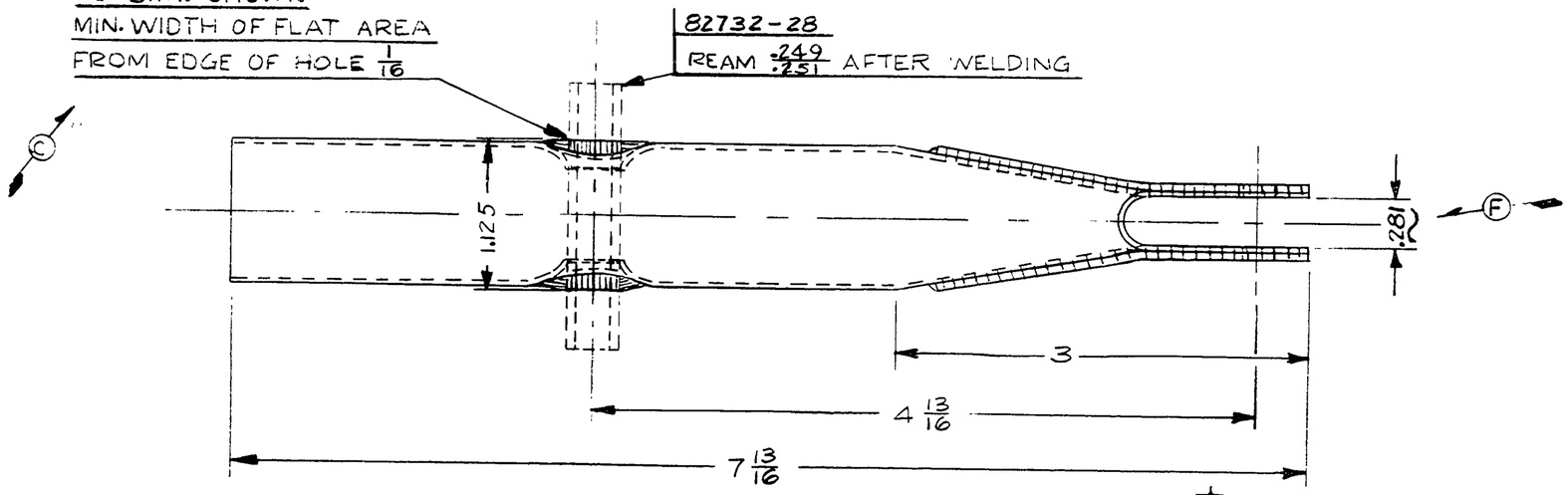

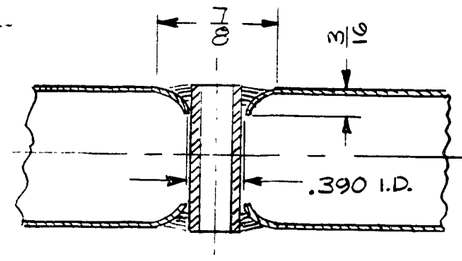

SECTION A-A
FULL SIZE

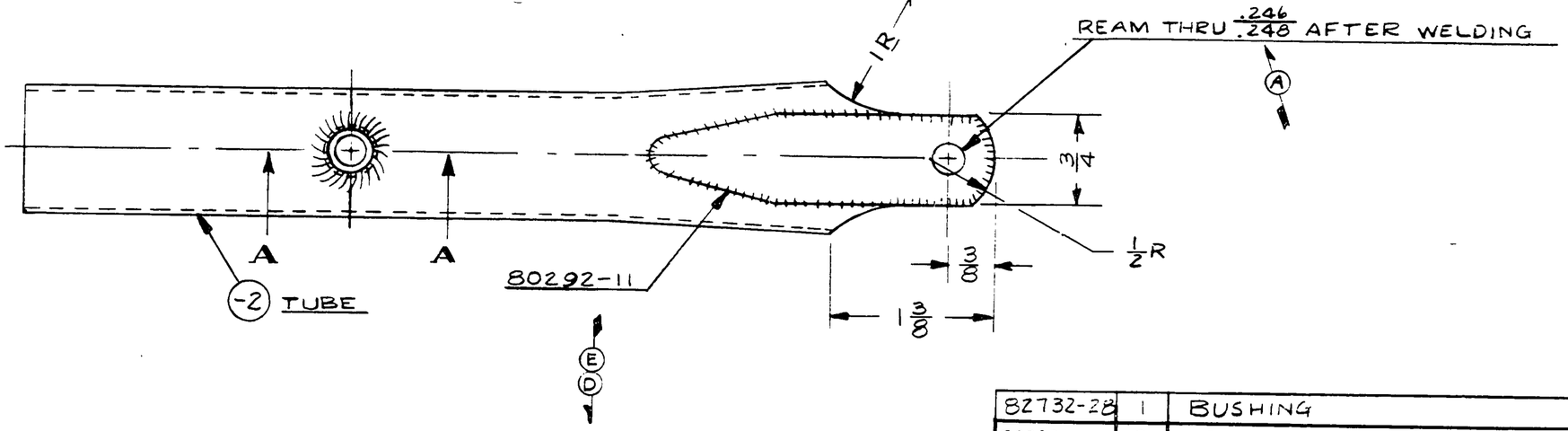

G	REDRAWN WITHOUT CHNG.	6-21-51	C.E.B.	J5C	2	42812	40241		
F	.281 WAS .375	12-3-43	I.M.M.	J3	2	42812	40241		
E	J5C MODEL REF. ADDED	10-20-43	C.E.K.	MODEL	PER PLANE	NEXT ASSEMBLY	SUPERSEDES	SUP. BY	
D	J3 MODEL REF. ADDED	8-26-43	I.D.B.						
C	NOTE REVISED	8-4-43	C.E.K.						
B	.201 HOLE REMOVED	8-3-43	C.E.K.						
A	.246/.248 WAS .249/.251	5-8-43	C.E.K.						
LET	REVISION	DATE	BY						

THIS DRAWING IS THE PROPERTY OF THE PIPER AIRCRAFT CORP. AND ITS POSSESSION BY UNAUTHORIZED PERSONS SHALL NOT BE CONSTRUED AS PERMISSION TO REPRODUCE FOR SALE IN WHOLE OR IN PART ANY DEVICES SHOWN THEREON.

PIPER AIRCRAFT CORP.
LOCK HAVEN, PENNA.

PART NO.	NO. REQ.	SIZE	MATERIAL / DESCRIPTION
82732-28	1		BUSHING
80292-11	2		REINFORCING STRAP
-2	1	1 1/16 x .035 x 7 7/8	#4130 STEEL TUBE

SCALE FULL SIZE — TOTAL WT.—LBS.
FINISH—PIPER SPECIFICATION # 10
MANUFACTURING PRACTICES—PIPER SPECIFICATION # 8

STUB ASSEMBLY-CONTROL STICK

DRAFTSMAN	CHECKER	STANDARDS
CROWLEY 3-18-43	L.E.K. 4-9-43	

42792

650

A650

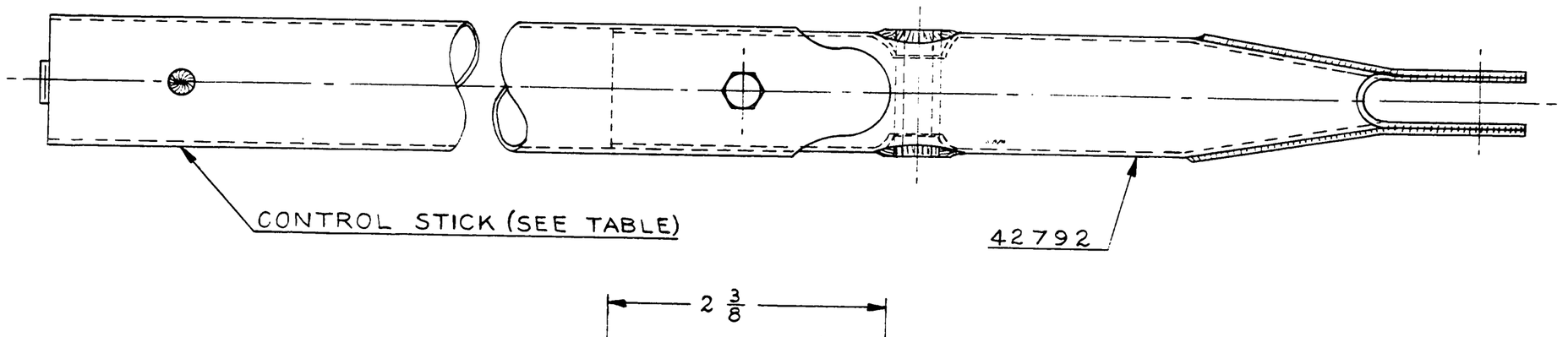

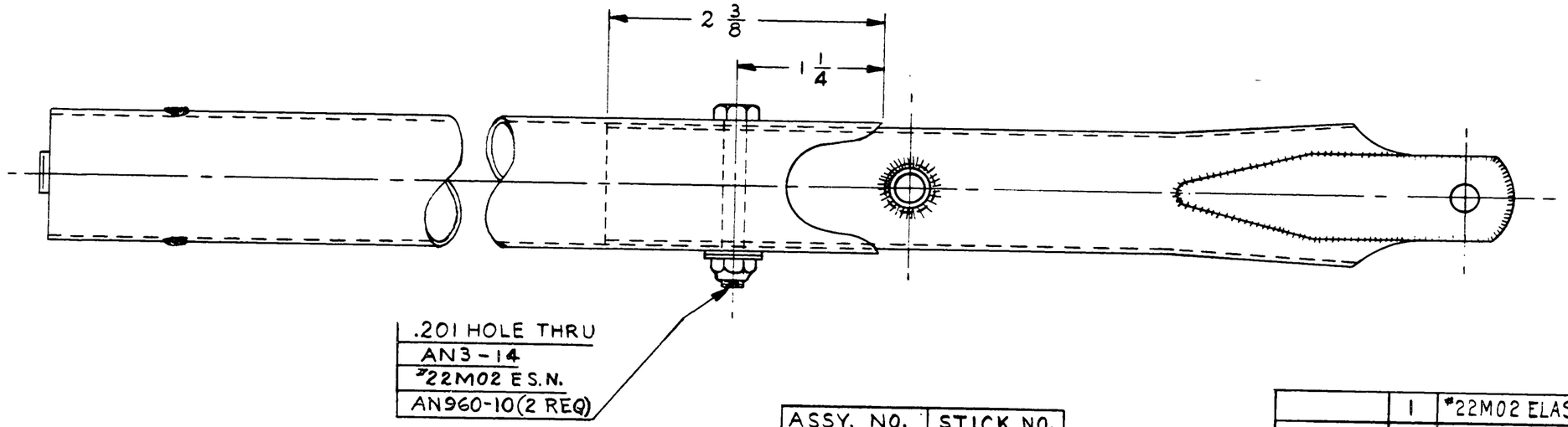

ASSY. NO.	STICK NO.
42812	12403-2
42812-2	12403-3

	NO. REQ.	NAME / MATERIAL
	1	#22M02 ELASTIC STOP NUT
12403-3 / 12403-2	1	CONTROL STICK(SEE TABLE)
AN960-10	2	WASHER
AN3-14	1	BOLT
42792	1	STICK STUB ASSY

PART NO.

SCALE FULL SIZE | TOTAL WT.—LBS.

FINISH—PIPER SPECIFICATION # 10

MANUFACTURING PRACTICES—PIPER SPECIFICATION # 9

MODEL	PER PLANE	NEXT ASSEMBLY	SUPERSEDES	SUP. BY

THIS DRAWING IS THE PROPERTY OF THE PIPER AIRCRAFT CORP. AND IT'S POSSESSION BY UNAUTHORIZED PERSONS SHALL NOT BE CONSTRUED AS PERMISSION TO REPRODUCE FOR SALE IN WHOLE OR IN PART ANY DEVICES SHOWN THEREON.

LET	REVISION	DATE	BY
J	REDRAWN & REVISED	6-21-51	C.K.

PIPER AIRCRAFT CORP.
LOCK HAVEN, PENNA.

STICK ASSEMBLY—
CONTROL

DRAFTSMAN	CHECKER	STANDARDS
C. E. K. 6-21-51	H. R. K. 6-22-51	

42812

651

A651

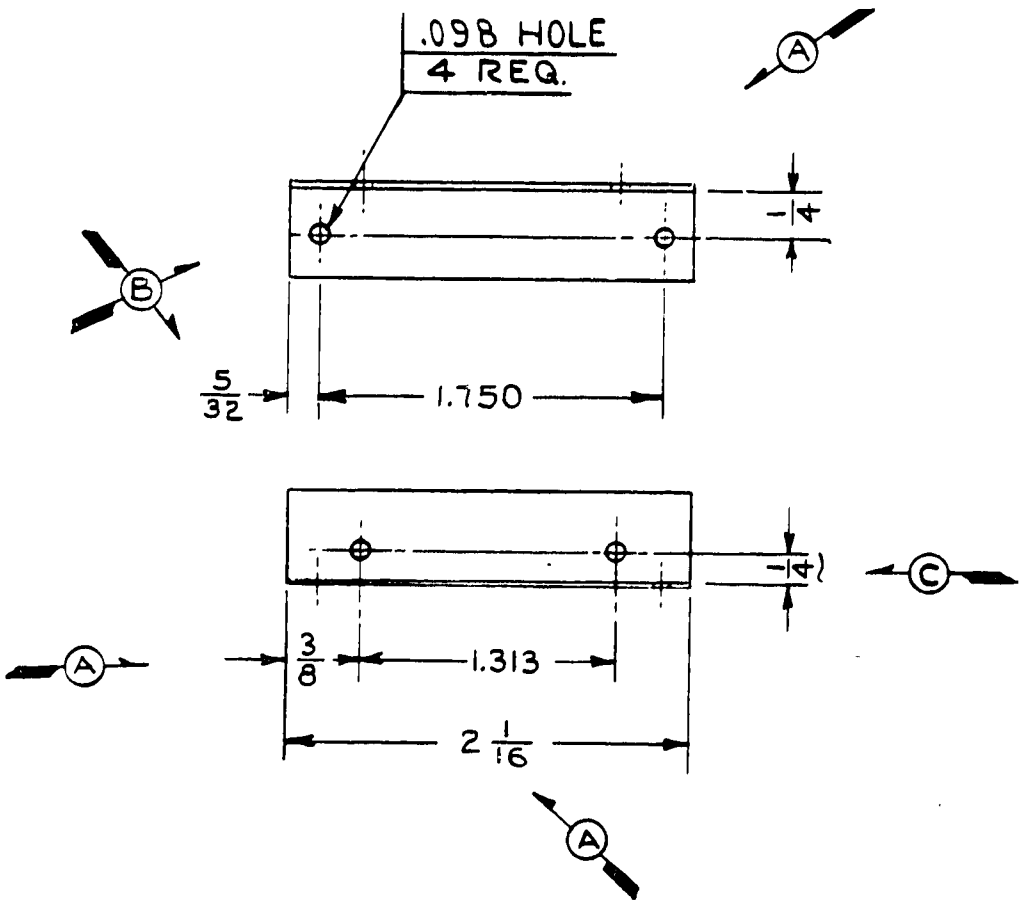

LET	REVISION	DATE	BY
E	REDRAWN WITHOUT CHANGE	6-14-51	I.M.M.
D	J5C MODEL REF. ADDED	7-8-46	I.D.B.
C	1/4 WAS 3/16	10-3-44	J.B.W.
B	5/32 WAS 7/32; VIEW REVISED	9-7-43	W.G.T.
A	3/8 WAS 7/16; 2 1/16 WAS 2 3/16	9-7-43	W.G.T.

MODEL	PER. PLANE	NEXT ASSEMBLY	SUPERSEDES	SUP. BY
J5C	2	42872	40431-3	
J5A-4B	2	42872	40431-3	
L4A	2	42872	40431-3	

THIS DRAWING IS THE PROPERTY OF THE PIPER AIRCRAFT CORP. AND ITS POSSESSION BY UNAUTHORIZED PERSONS SHALL NOT BE CONSTRUED AS PERMISSION TO REPRODUCE FOR SALE IN WHOLE OR IN PART ANY DEVICES SHOWN THEREON.

PIPER AIRCRAFT CORP.
LOCK HAVEN, PENNA.

PART NO.	NO. REQ.	SIZE	MATERIAL / DESCRIPTION
		.025 x 1 x 2 1/16	35-1/2 H. ALUM

SCALE FULL SIZE | TOTAL WT.—LBS.

FINISH—PIPER SPECIFICATION # 10

MANUFACTURING PRACTICES—PIPER SPECIFICATION # 9

ANGLE — AILERON TIP RIB SHORT

DRAFTSMAN	CHECKER	STANDARDS
M.G.S. 4-26-43	L.E.K. 5-4-43	

42851

332

A332

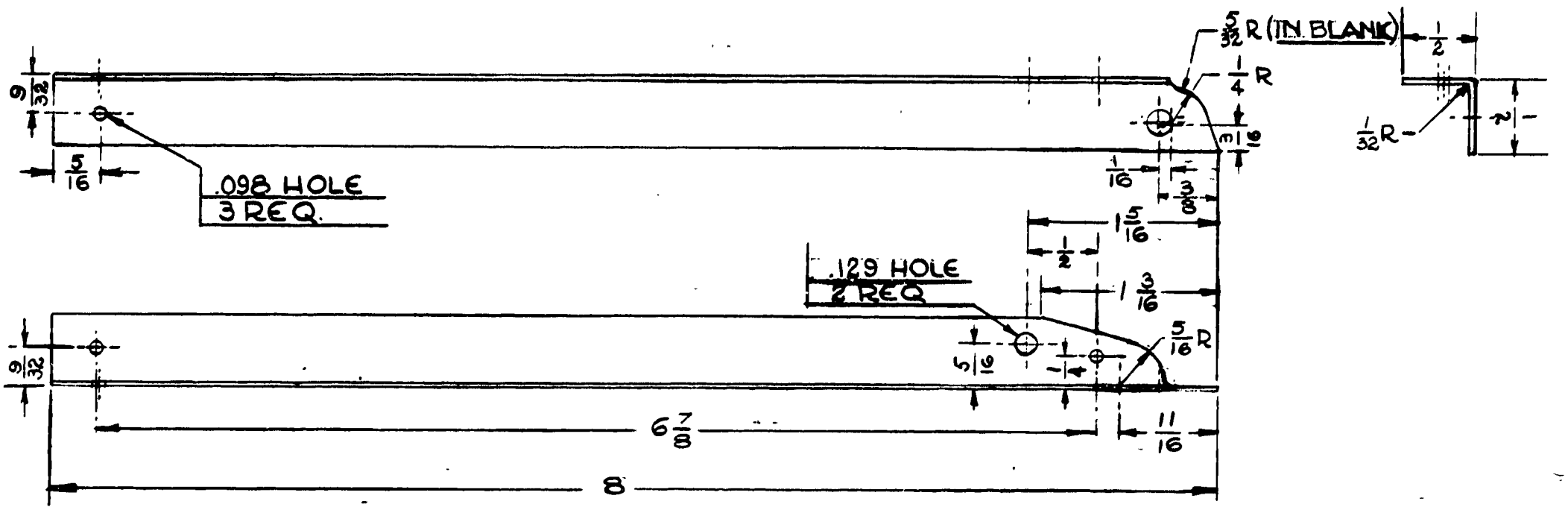

42861 LEFT HAND SHOWN
42861-1 RIGHT HAND OPPOSITE

LIMITS, SHOP PRACTICES AND FINISH. UNLESS OTHERWISE NOTED, TO BE IN ACCORDANCE WITH PIPER SPECIFICATIONS #9 AND #10.

PART No.	NO. REQ.	SIZE	DESCRIPTION / MATERIAL
		.025 × 1 × 8	3S-½ H. ALUM.

SCALE FULL SIZE — TOTAL WT. - LBS.

FINISH

ANGLE - AILERON TIP RIB LONG

MODEL	PER SHIP	NEXT ASSEMBLY	SUPERSEDES	SUP. BY
J5C	2L2R	42872	40431-2	
J5A	2L2R	42872	40431-2	
J4A	2L2R	42872	40431-2	

LET.	REVISION	DATE	BY
E	J5C MODEL REF. ADDED	7-8-46	J.D.B.
D	REDRAWN & REVISED	11-5-43	F.J.D.

PIPER AIRCRAFT CORP.
LOCK HAVEN, PENNA.

DRAWN	CHECKED	APPROVED
F.J.D. 11-5-43	C.K. 11-12-43	

42861

A333

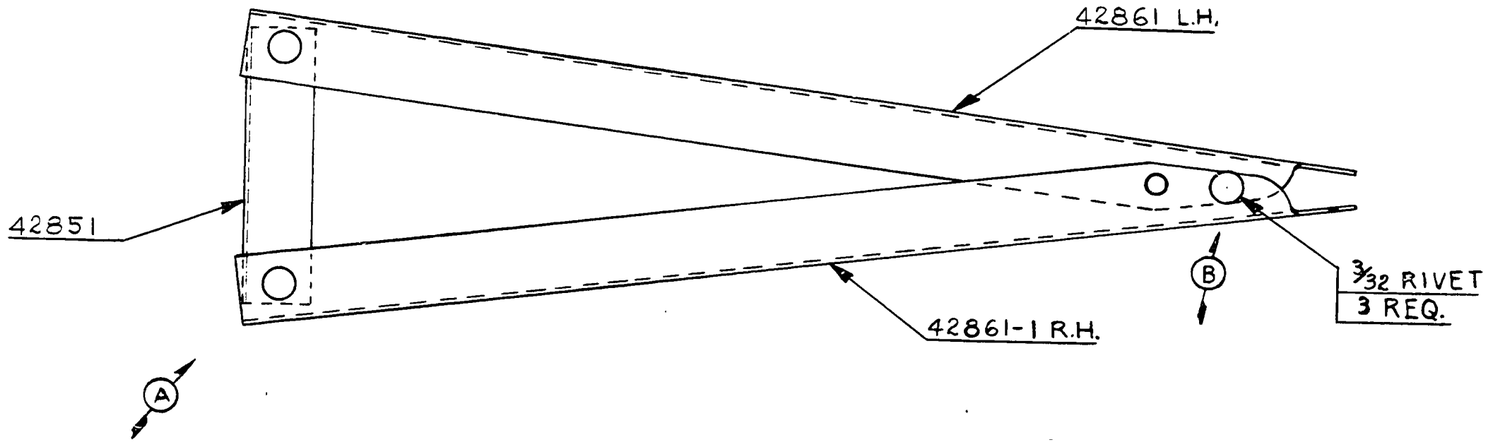

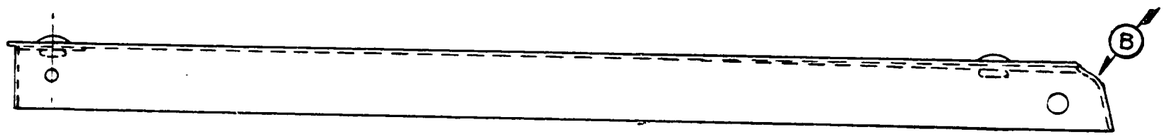

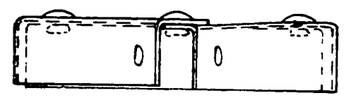



	3	3/32 × 9/64 L	TUBULAR STEEL RIVET
42861-1	1	LONG ANGLE	
42861	1	LONG ANGLE	
42851	1	SHORT ANGLE	
PART NO.	NO. REQ.	SIZE	DESCRIPTION MATERIAL

SCALE FULL SIZE — TOTAL WT.—LBS.

FINISH—PIPER SPECIFICATION # 10

MANUFACTURING PRACTICES—PIPER SPECIFICATION # 9

MODEL	PER PLANE	NEXT ASSEMBLY	SUPERSEDES	SUP. BY
J5C	2	42555		
J3L-4B	2	42585		
J-4A	2	42585		

LET	REVISION	DATE	BY
D	REDRAWN WITHOUT CHANGE	6-13-51	C.K.
C	J5C MODEL REF. ADDED	7-8-46	I.D.B.
B	VIEWS OF 42861 & 42861-1 REVISED	11-5-43	F.J.D.
A	RIVET SPEC. & 42851 VIEW REVISED	9-7-43	W.G.T.

THIS DRAWING IS THE PROPERTY OF THE PIPER AIRCRAFT CORP. AND ITS POSSESSION BY UNAUTHORIZED PERSONS SHALL NOT BE CONSTRUED AS PERMISSION TO REPRODUCE FOR SALE IN WHOLE OR IN PART ANY DEVICES SHOWN THEREON.

PIPER AIRCRAFT CORP.
LOCK HAVEN, PENNA.

RIB ASSEMBLY— AILERON TIP

M. G. S.	L. E. K.		42872
4-27-43	5-4-43		
DRAFTSMAN	CHECKER	STANDARDS	

6-52

A652

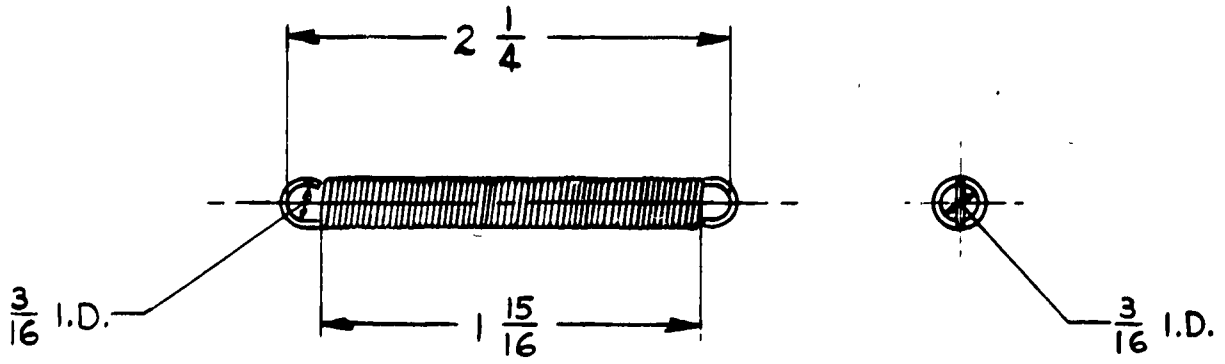

(C A) (E) (D B)

				L-14	1	91300			
				J5C	1	24186	81971		
				J3	1	24146	81971		
				L-4A	1	24266	81971		
				MODEL	PER PLANE	NEXT ASSEMBLY	SUPERSEDES	SUP. BY	
F	REDRAWN WITHOUT CHANGE	6-21-51	C.K.						
E	L-14 MODEL REF. ADDED	6-14-45	J.B.M.						
D	L-4A N.A. 24266 WAS 23856	6-26-44	I.D.B.						
C	J5C MODEL REF. ADDED	12-21-43	A.H.						
B	L-4A NEXT ASSY. 23856 WAS 42902	11-26-43	L.R.						
A	J3 MODEL REF. ADDED	10-7-43	M.G.S.						
LET	REVISION	DATE	BY						

THIS DRAWING IS THE PROPERTY OF THE PIPER AIRCRAFT CORP. AND ITS POSSESSION BY UNAUTHORIZED PERSONS SHALL NOT BE CONSTRUED AS PERMISSION TO REPRODUCE FOR SALE IN WHOLE OR IN PART ANY DEVICES SHOWN THEREON.

PIPER AIRCRAFT CORP.
LOCK HAVEN, PENNA.

		21 GA. W&M (.032)	BLACK JAPANNED SPRING STEEL
PART NO.	NO. REQ.	SIZE	DESCRIPTION
		MATERIAL	
SCALE FULL SIZE		TOTAL WT.—LBS.	
FINISH—PIPER SPECIFICATION # 10			
MANUFACTURING PRACTICES—PIPER SPECIFICATION # 9			

SPRING – STABILIZER INDICATOR RETURN

DRAFTSMAN	CHECKER	STANDARDS	
Keller 6-3-43	L. E. K. 6-10-43		**42891**

534

A334

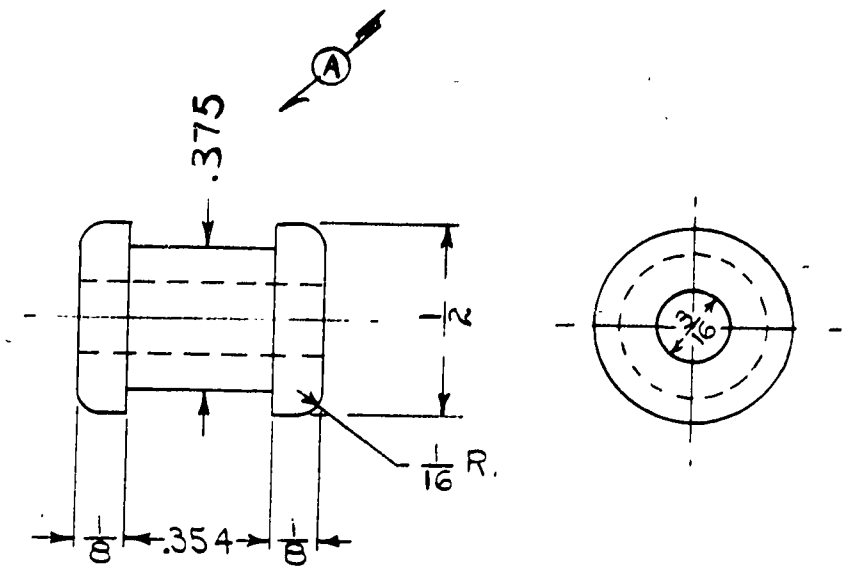

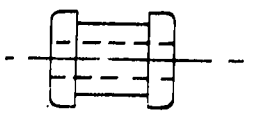

ACTUAL SIZE

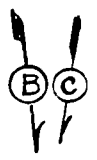

LIMITS, SHOP PRACTICES AND FINISH, UNLESS OTHERWISE NOTED, TO BE IN ACCORDANCE WITH PIPER SPECIFICATIONS #9 AND #10.

PART No.	No. REQ.	SIZE	DESCRIPTION
		1/2 DIA x 5/8 LONG	HARD FIBER

MATERIAL

SCALE TWICE SIZE

FAIRLEAD-CABLE

LET.	REVISION	DATE	SR.	BY
C	L-14 MODEL REF. ADDED	6-14-45		J.B.M.
B	J5C; J5D; HE-1 MODEL REF. ADDED	2-3-44		I.D.B.
A	.375 WAS 3/8	2-3-44		I.D.B.

MODEL	PER SHIP	NEXT ASSEMBLY	SUPERSEDES	SUPERSEDED BY
L-14	1	91300		
J5C; J5D; HE-1	4	41671		
L-4B; T-6	2	40123		
J3L-4A	2	40123	N361-80022-42	

PIPER AIRCRAFT CORP.
LOCK HAVEN, PENNA.

DRAWN	CHECKED	APPROVED
M.G.S. 7-17-43	L.E.K. 7-20-43	

42911

NO. 195-M ALBANENE A. & B. SMITH CO., PGH., PA.

335

A335

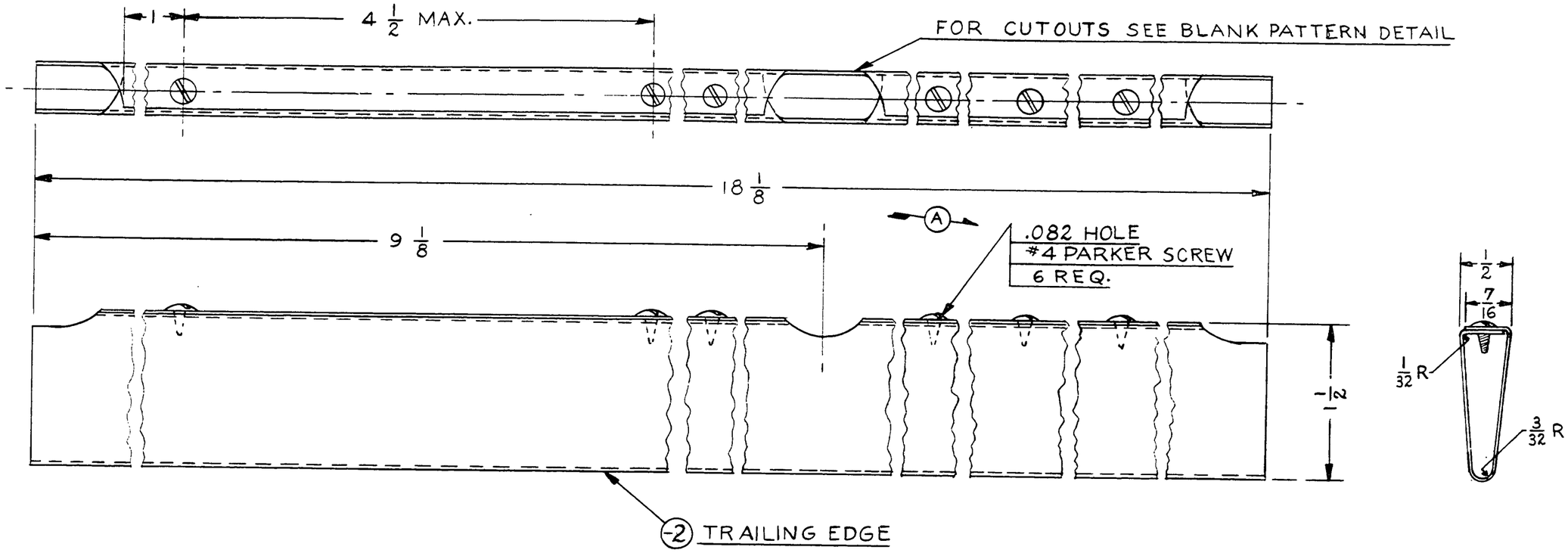

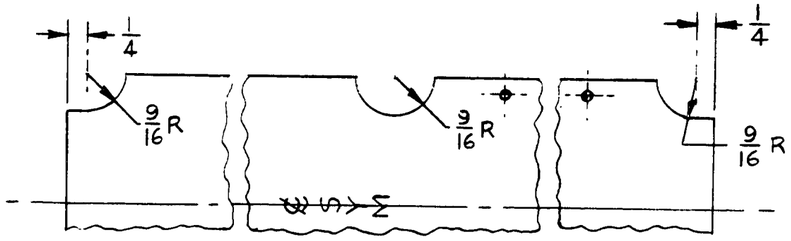

BLANK PATTERN DETAIL
SCALE 6 = 1 FT.

LET	REVISION	DATE	BY
B	REDRAWN WITHOUT CHANGE	6-18-51	C.K.
A	.082 WAS .094	10-15-43	I.D.B.

MODEL	PER PLANE	NEXT ASSEMBLY	SUPERSEDES	SUP. BY
J3	2	42585	WAS 12172-6	
J-4A	2	42585	WAS 12172-6	

THIS DRAWING IS THE PROPERTY OF THE PIPER AIRCRAFT CORP. AND ITS POSSESSION BY UNAUTHORIZED PERSONS SHALL NOT BE CONSTRUED AS PERMISSION TO REPRODUCE FOR SALE IN WHOLE OR IN PART ANY DEVICES SHOWN THEREON.

PIPER AIRCRAFT CORP.
LOCK HAVEN, PENNA.

PART NO.	NO. REQ.	SIZE	MATERIAL / DESCRIPTION
#4	6	1/4 LONG	TYPE A STOVE HD. P.K. SCREW
-2	1	.020 × 4 × 18 1/8	3S-1/2H ALUM.

SCALE FULL SIZE & NOTED — TOTAL WT.—LBS.
FINISH—PIPER SPECIFICATION # 10
MANUFACTURING PRACTICES—PIPER SPECIFICATION # 9

EDGE ASSY—AILERON INBOARD TRAILING

DRAFTSMAN	CHECKER	STANDARDS
Keller 7-26-43	C. K. 7-29-43	

42922

6 53

A653

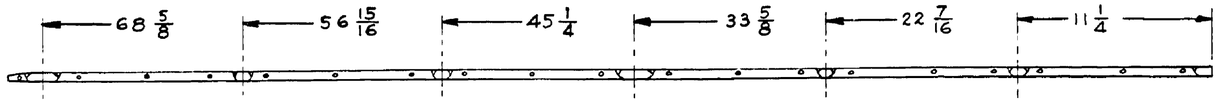

FIG. 1
2" = 1 FT.

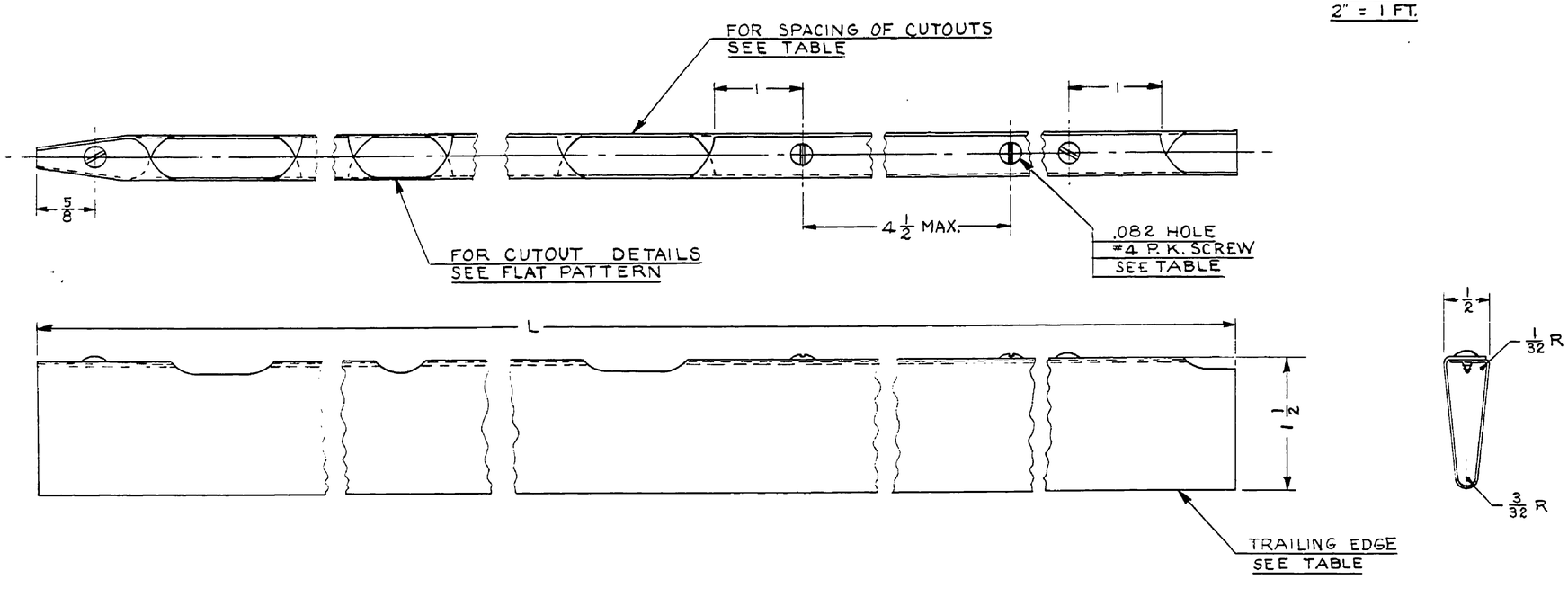

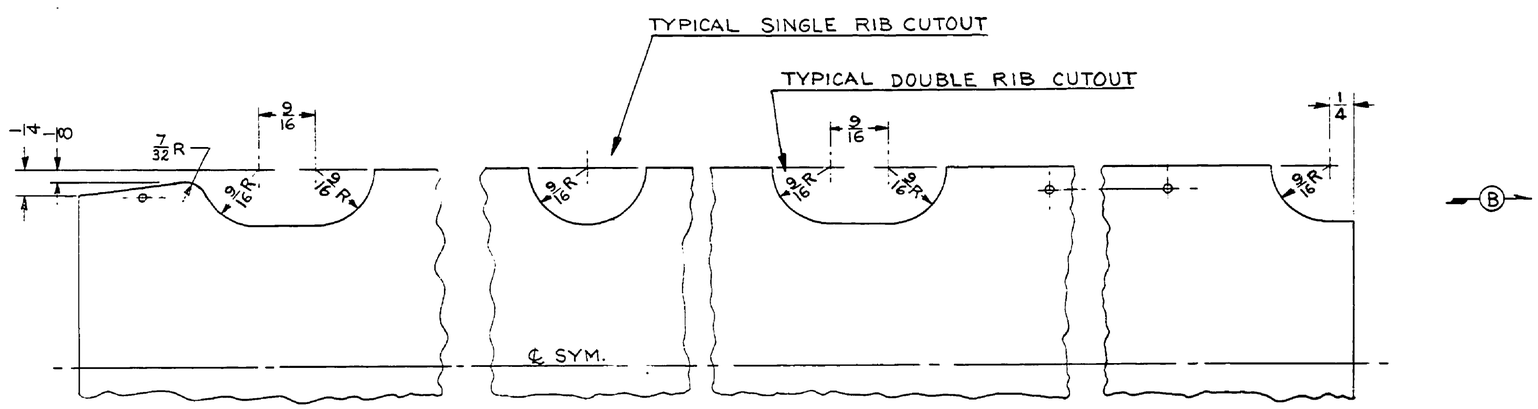

FLAT PATTERN

ASSY. NO.	TRAILING EDGE NO.	L	CUT OUT SPACING	NO. P.K. SCR. REQ.
42933	42933-2	70 5/8	SEE FIG. 1	19
42933-3	42933-4	58 5/8	SEE FIG. 2	16

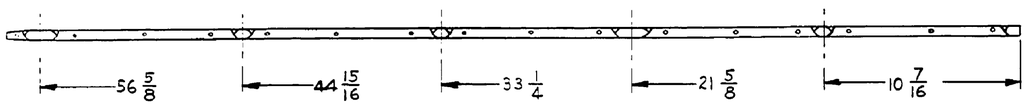

FIG. 2
2 IN. = 1 FT.

PART No.	NO. REQ.	SIZE	DESCRIPTION
#4	SEE TABLE	1/4 LONG	TYPE "A" STOVE HD. P.K. SCREW
-4	1	.020 x 4 x NOTED	3S-1/2 H. ALUM.
-2			

MATERIAL

SCALE FULL SIZE & NOTED — TOTAL WT.—LBS.

FINISH—PIPER SPECIFICATION #10

MANUFACTURING PRACTICES—PIPER SPECIFICATION #9

EDGE ASSY.—AILERON OUTBOARD TRAILING

LET.	REVISION	DATE	BY
C	REDRAWN WITHOUT CHANGE	6-18-51	C.K.
B	-3-4 FIG. 2 & TABLE ADDED	6-24-49	C.K.
A	.129 HOLES & DIM. REMOVED	2-13-46	C.E.K.

MODEL	PER PLANE	NEXT ASSEMBLY	SUPERSEDES	SUP. BY
13 X 4A	2	42585	NAS 12172-7	

THIS DRAWING IS THE PROPERTY OF THE PIPER AIRCRAFT CORP. AND ITS POSSESSION BY UNAUTHORIZED PERSONS SHALL NOT BE CONSTRUED AS PERMISSION TO REPRODUCE FOR SALE, IN WHOLE OR IN PART, ANY DEVICES SHOWN THEREON

PIPER AIRCRAFT CORP.
LOCK HAVEN, PENNA.

DRAFTSMAN	CHECKER	STANDARDS
M. G. S. 7-26-43	C. K. 7-28-43	

42933

A811

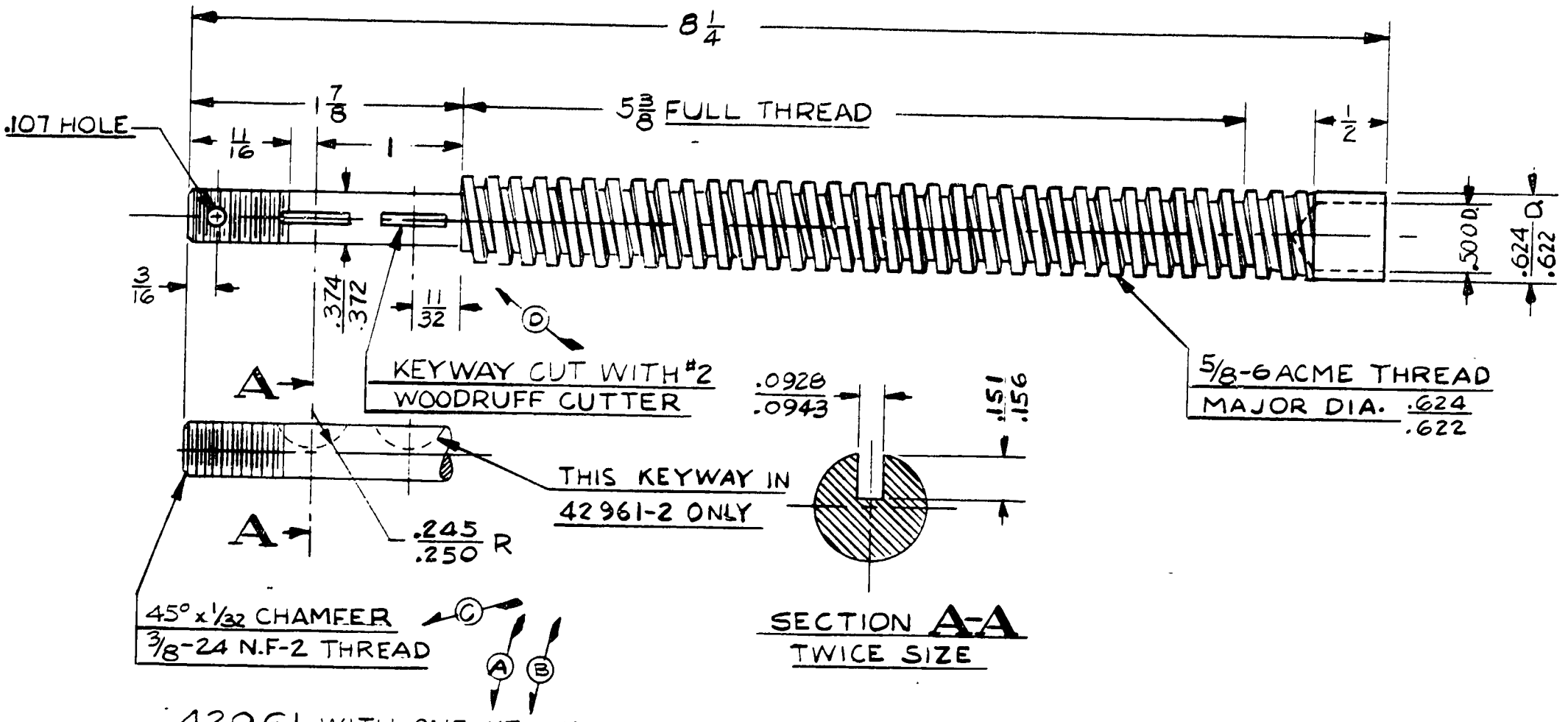

42961 WITH ONE KEYWAY AS NOTED

42961-2 WITH TWO KEYWAYS AS SHOWN

LET	REVISION	DATE	BY
F	REDRAWN WITHOUT CHANGE	6-21-51	C.B.
E	-2 ADDED	3-24-50	C.K.
D	KEYWAY ADDED	8-4-48	H.R.K.
C	N.F.-2 WAS N.F.-3	7-5-45	I.M.N.
B	L-14 MODEL REF. ADDED	7-3-45	E.L.N.
A	J5C MODEL REF. ADDED	12-21-43	I.D.B.

MODEL	PER PLANE	NEXT ASSEMBLY	SUPERSEDES	SUP. BY
L-14	1	42664		
J5C	1	42664	40691	
J3L-4M	1	42664	40691	

THIS DRAWING IS THE PROPERTY OF THE PIPER AIRCRAFT CORP. AND ITS POSSESSION BY UNAUTHORIZED PERSONS SHALL NOT BE CONSTRUED AS PERMISSION TO REPRODUCE FOR SALE IN WHOLE OR IN PART ANY DEVICES SHOWN THEREON.

PIPER AIRCRAFT CORP.
LOCK HAVEN, PENNA.

PART NO.	NO. REQ.	SIZE	DESCRIPTION / MATERIAL
		5/8 DIA. x 8 1/4	C.R. STEEL

SCALE FULL SIZE & NOTED | TOTAL WT.—LBS.

FINISH—PIPER SPECIFICATION # 10

MANUFACTURING PRACTICES—PIPER SPECIFICATION # 9

SCREW – STABILIZER ADJUSTMENT

DRAFTSMAN	CHECKER	STANDARDS
R.E.T. 8-21-43	C.K. 8-23-43	

42961

A336

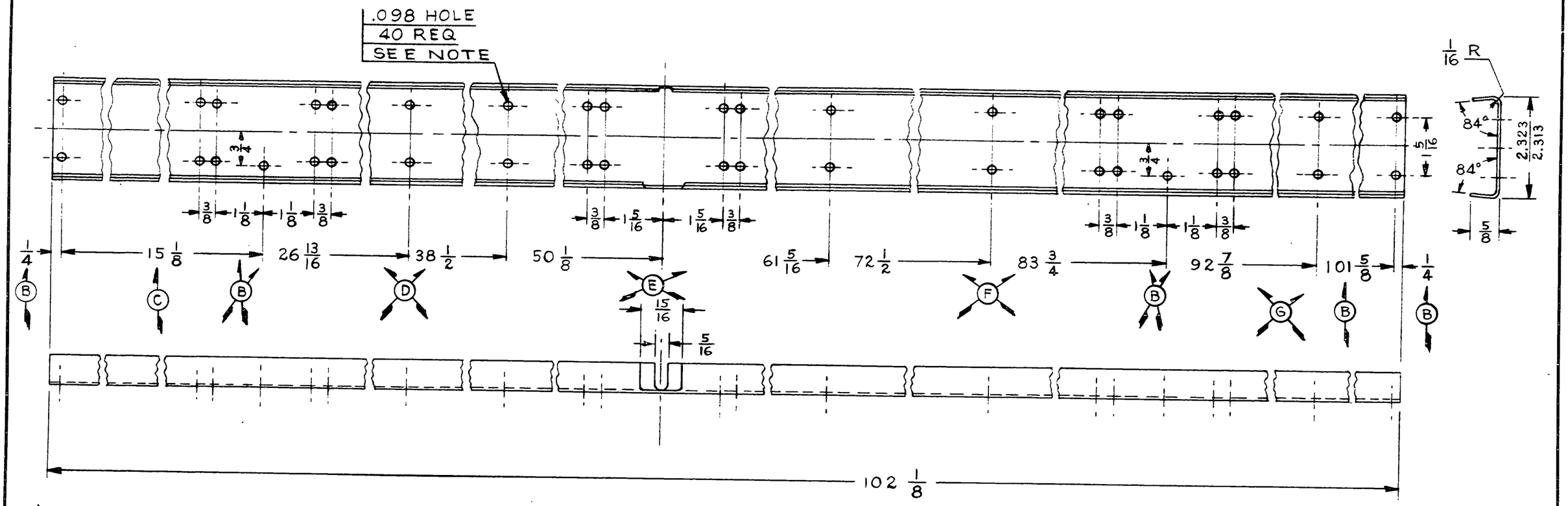

NOTE:
ALL HOLE CENTERS SHALL COINCIDE WITH RELATED PARTS ON AILERON AND WING ASS'YS.

H 42972 L.H. SHOWN
42972-1 R.H. OPPOSITE.

H

LET	REVISION	DATE	BY
J	REDRAWN WITHOUT CHANGE	6-13-51	C.K.
H	NO. PER SHIP 1 EA. WAS 2; NOTE ADDED	2-27-45	I.D.B.
G	92 7/8 WAS 92 15/16; 101 5/8 WAS 101 11/16	9-30-44	H.M.Z.
F	72 1/2 WAS 72 9/16; 83 3/4 WAS 83 13/16	9-30-44	H.M.Z.
E	50 1/8 WAS 50 3/16; 61 5/16 WAS 61 3/8	9-30-44	H.M.Z.
D	26 13/16 WAS 26 7/8; 38 1/2 WAS 38 9/16	9-30-44	H.M.Z.
C	15 1/8 WAS 15 3/16	11-12-43	F.J.D.
B	1/4 WAS 3/16, 1 1/8 WAS 1 1/16, 101 11/16 WAS 101 3/4	11-12-43	F.J.D.
A	NOTE ADDED	10-29-43	R.E.S.

MODEL	PER PLANE	NEXT ASSEMBLY	SUPERSEDES	SUP. BY
J3	1 EA.	42588	40301-2	
L-4A	1 EA.	42585	40301-2	

THIS DRAWING IS THE PROPERTY OF THE PIPER AIRCRAFT CORP. AND ITS POSSESSION BY UNAUTHORIZED PERSONS SHALL NOT BE CONSTRUED AS PERMISSION TO REPRODUCE FOR SALE IN WHOLE OR IN PART ANY DEVICES SHOWN THEREON.

PIPER AIRCRAFT CORP.
LOCK HAVEN, PENNA.

PART NO.	NO. REQ.	SIZE	DESCRIPTION / MATERIAL
		.032×3 1/2×102 1/8	3S-0 ALUM. OR 3S-1/2H ALUM.

SCALE 6 = 1 FT — TOTAL WT.—LBS.
FINISH—PIPER SPECIFICATION # 1N
MANUFACTURING PRACTICES—PIPER SPECIFICATION # 9

SPAR-AILERON

DRAFTSMAN	CHECKER	STANDARDS
Keller 9-8-43	C. K. 9-15-43	

42972

654

A654

WAS 4171
D4183-A

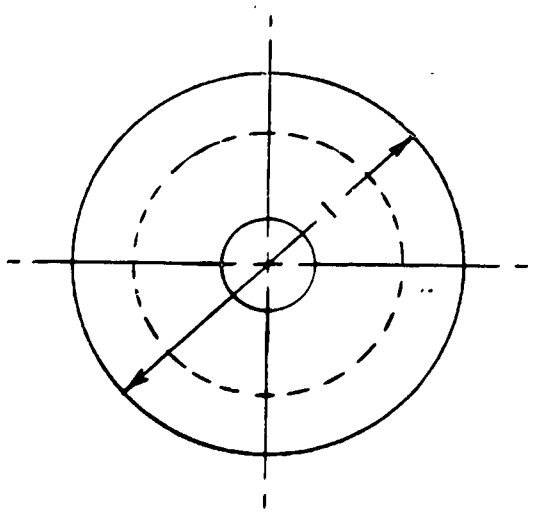

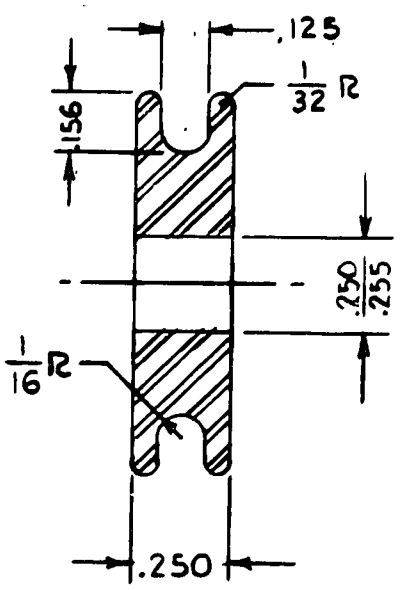

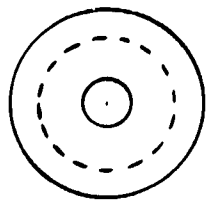

ACTUAL SIZE

LIMITS, SHOP PRACTICES AND FINISH, UNLESS OTHERWISE NOTED, TO BE IN ACCORDANCE WITH PIPER SPECIFICATIONS #9 AND #10.

PART No.	No. REQ.	SIZE	DESCRIPTION / MATERIAL
		1/4 x 1 DIA.	CANVAS BASE PHENOLIC

SCALE TWICE SIZE & NOTED — TOTAL WT. - LBS.
FINISH

PULLEY — PARKING BRAKE IDLER

LET.	REVISION	DATE	BY
C	J5C N.A. 41753 WAS 10134	11-16-45	C.E.K.
B	J5C N.A. 10134 WAS 41753	10-8-45	I.M.M.
A	L-14 MODEL REF. ADDED	6-14-45	J.B.M.

MODEL	PER SHIP	NEXT ASSEMBLY	SUPERSEDES	SUP. BY
L-14	3	91300		
J5C	3	41753	41761	

PIPER AIRCRAFT CORP.
LOCK HAVEN, PENNA.

DRAWN	CHECKED	APPROVED
J. CROWLEY 11-25-43	C.K. 12-17-43	

43001

337

A337

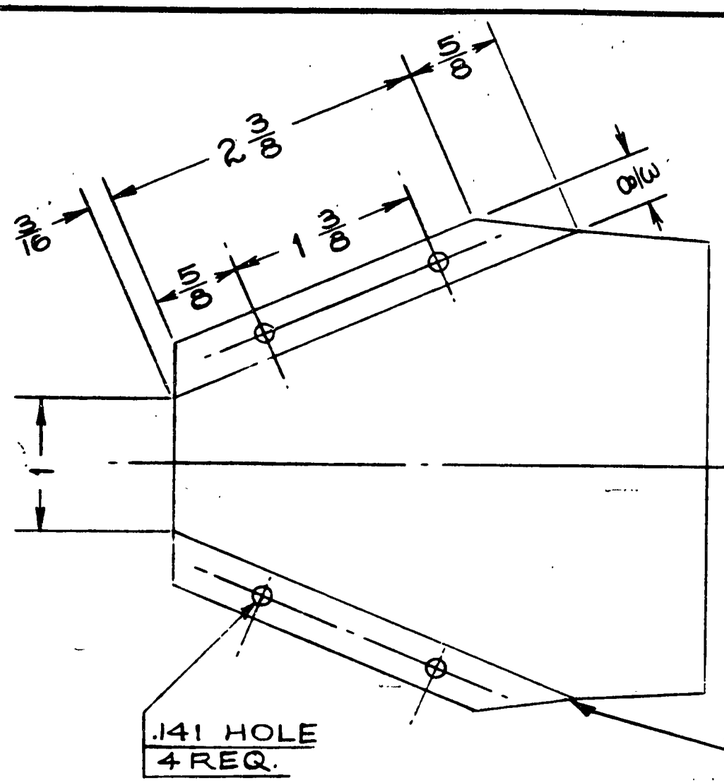

NOTE: SIDE CORNERS TO BE REMOVED WITH ONE STRAIGHT CUT.

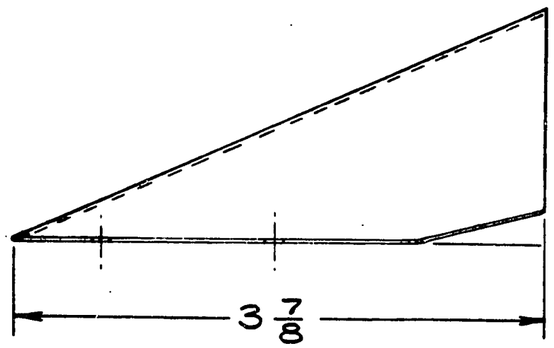

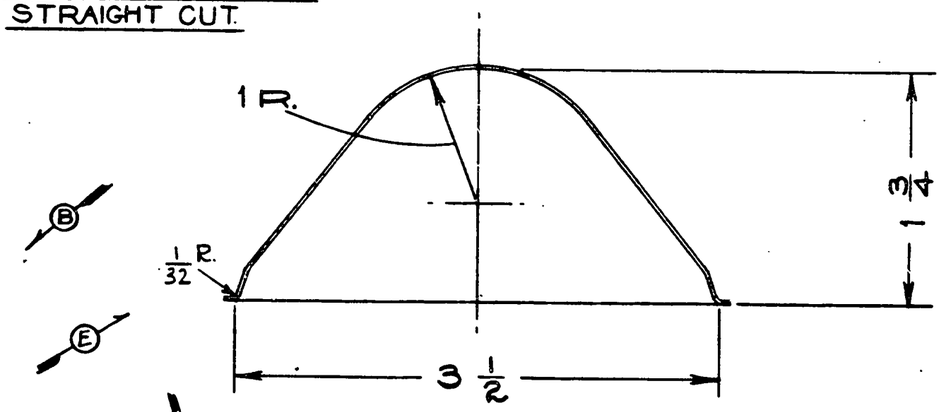

Limits and shop practices, unless otherwise noted, to be in accordance with Piper Specification #98#10

LET.	REVISION	DATE	OR.	BY
G	L-4A NEXT ASSY. 24254 WAS 23976	6-26-44		R.D.R.
F	J3 NEXT ASSY. 24176 WAS 23544	11-19-43		A.H.
E	1/32 R. ADDED	7-6-43		L.R.
D	L-4A NEXT ASSY 23876 WAS 23806	4-20-43		R.E.S.
C	L-4A NEXT ASSY 23806 WAS 5115 5	1-19-43		R.E.S.
B	3/16 & 1/4 DIM. REMOVED	2-27-42		C.E.V.
A	NOTE ADDED	2-27-42		C.E.V.

MODEL	PER SHIP	NEXT ASSEMBLY	SUPERSEDES	SUPERSEDED BY
J3	2	23536		
J4A	2	23320		
J4A	2	24256		
J3	2	24176	50061	

PIPER AIRCRAFT CORP.
LOCK HAVEN, PENNA.

PART NO.	No. REQ.	SIZE	DESCRIPTION / MATERIAL
		.020 x 4 1/4 x 4 3/16	H.R. STEEL

SCALE FULL SIZE

COVER — AILERON PULLEY HOUSING

DRAWN	CHECKED	APPROVED
F.B. 10-10-41	R.C.M. 10-13-41	

50042

A655

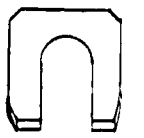

ACTUAL SIZE

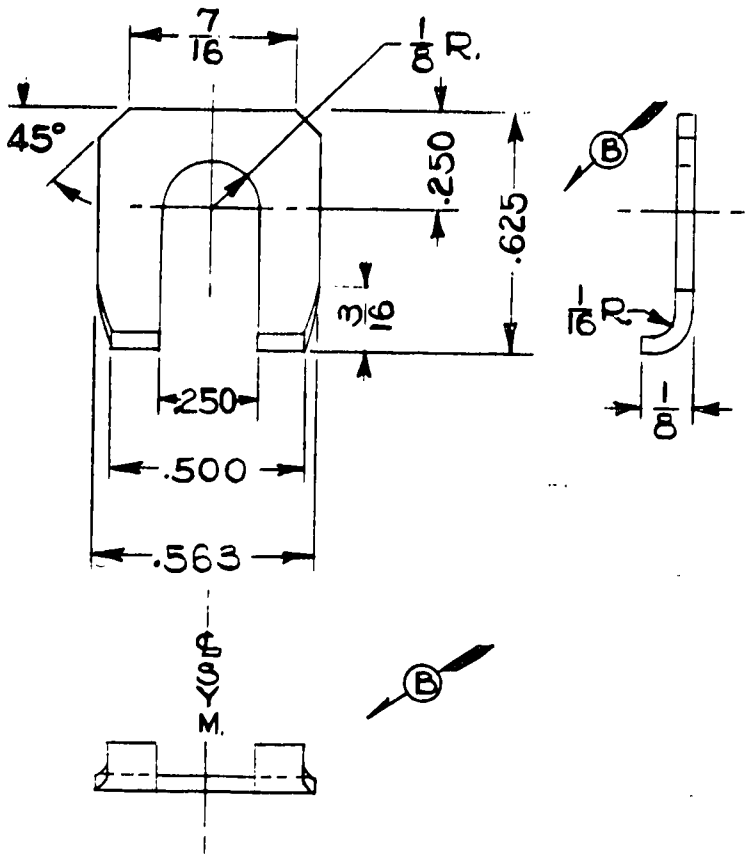

							.045 x 9/16 x 1 1/16	#1025 STEEL	
							SIZE	DESCRIPTION	
						PART NO.	NO. REQ.	MATERIAL	
						SCALE TWICE SIZE & NOTED		TOTAL WT.—LBS.	
						FINISH—PIPER SPECIFICATION # 10			
						MANUFACTURING PRACTICES—PIPER SPECIFICATION # 9			
				J6-8	2	50173			
				L-4B	2	50173			
				L-4A	2	50173			
				J3	2	50173			
				MODEL	PER PLANE	NEXT ASSEMBLY	SUPERSEDES	SUP. BY	

STOP – DOOR PLUNGER

LET	REVISION	DATE	BY
C	REDRAWN WITHOUT CHANGE	6-21-51	E.M.
B	.625 WAS 5/8, VIEW ADDED	9-2-43	L.R
A	REDRAWN & REVISED	5-10-43	CEK

THIS DRAWING IS THE PROPERTY OF THE PIPER AIRCRAFT CORP. AND ITS POSSESSION BY UNAUTHORIZED PERSONS SHALL NOT BE CONSTRUED AS PERMISSION TO REPRODUCE FOR SALE IN WHOLE OR IN PART ANY DEVICES SHOWN THEREON.

PIPER AIRCRAFT CORP.
LOCK HAVEN, PENNA.

DRAFTSMAN	CHECKER	STANDARDS
KELLER 5-10-43	L.E.K. 5-24-43	

50091

338

A338

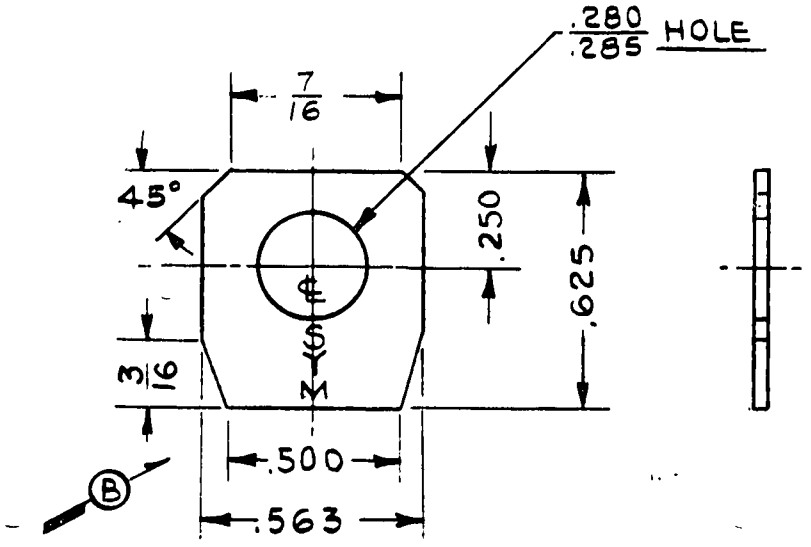

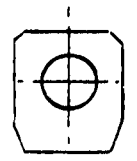

ACTUAL SIZE

D

								.045 x 9/16 x 5/8	#1025 STEEL
								SIZE	DESCRIPTION
							PART NO.	NO. REQ.	MATERIAL
								SCALE TWICE SIZE & NOTED	TOTAL WT.—LBS.
				TG-B	2	50173		FINISH—PIPER SPECIFICATION # 10	
				L-4B	2	50173		MANUFACTURING PRACTICES—PIPER SPECIFICATION # 9	
				L-4A	2	50173			
				J3	2	50173			
F	REDRAWN WITHOUT CHANGE	6-21-51	I.M.M.	MODEL	PER PLANE	NEXT ASSEMBLY	SUPERSEDES	SUP. BY	
E	~~.280~~ .285 HOLE WAS .255/.260	3-20-46	L.R.	THIS DRAWING IS THE PROPERTY OF THE PIPER AIRCRAFT CORP. AND ITS POSSESSION BY UNAUTHORIZED PERSONS SHALL NOT BE CONSTRUED AS PERMISSION TO REPRODUCE FOR SALE IN WHOLE OR IN PART ANY DEVICES SHOWN THEREON.					
D	5/8 WAS 11/16	10-21-43	J.E.C.						
C	1/16R. 1/8 FLANGE REMOVED	10-21-43	J.E.C.						
B	VIEW REVISED, .500 WAS 9/16	4-6-43	L.R.	PIPER AIRCRAFT CORP. LOCK HAVEN, PENNA.					
A	REDRAWN & REVISED	5-10-43	G.E.K.						
LET	REVISION	DATE	BY						

GUIDE — DOOR PLUNGER

KELLER	L.E.K.		50101
5-10-43	5-24-43		
DRAFTSMAN	CHECKER	STANDARDS	

339

A339

WAS E2-8189
J3-4210

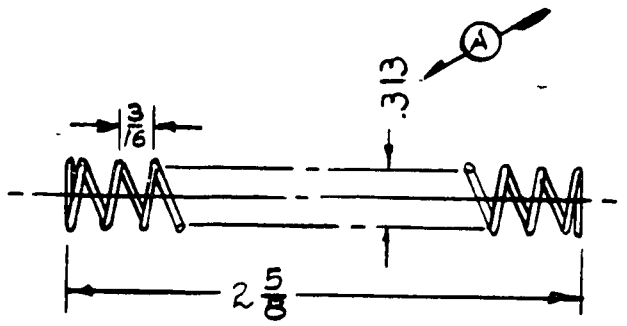





LIMITS, SHOP PRACTICES AND FINISH. UNLESS OTHERWISE NOTED, TO BE IN ACCORDANCE WITH PIPER SPECIFICATIONS #9 AND #10.

PART No.	No. REQ.	.040 NOTED SIZE	SPRING STEEL DESCRIPTION
		MATERIAL	

SCALE FULL SIZE | TOTAL WT.-LBS.

FINISH

MODEL	PER SHIP	NEXT ASSEMBLY	SUPERSEDES	SUP. BY
L-14	4	90944,91546		
TG-8	2	50131		
L-4B	2	50131		
L-4A	2	50131		
J3	2	50131		

LET.	REVISION	DATE	BY
D	L-14 MODEL REF. ADDED	6-14-45	I.D.B.
C	IN B/M .040 WAS .032	3-26-44	R.D.R.
B	REDRAWN WITHOUT CHANGE	4-22-44	V.P.
A	.313 WAS 5/16	5-8-43	C.E.K.

PIPER AIRCRAFT CORP.
LOCK HAVEN, PENNA.

SPRING — DOOR PLUNGER

DRAWN	CHECKED	APPROVED
V. PFIEFFER 4-22-44	R.E.T. 4-24-44	

50111

340

A340

WAS J3-A209
J3-A210

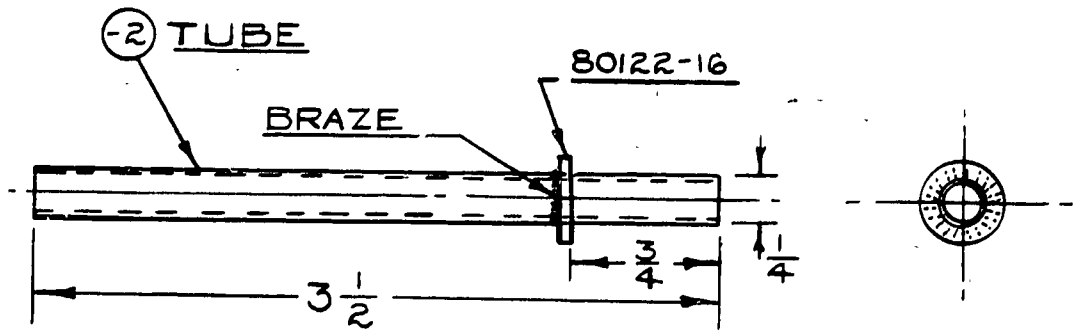

LIMITS, SHOP PRACTICES AND FINISH. UNLESS OTHERWISE NOTED, TO BE IN ACCORDANCE WITH PIPER SPECIFICATIONS #9 AND #10.

PART No.	No. REQ.	SIZE	MATERIAL / DESCRIPTION
80122-16	1	WASHER	
-2	1	1/4 x .028 x 3 1/2	*1025 STEEL

SCALE FULL SIZE — TOTAL WT.- LBS.
FINISH

MODEL	PER SHIP	NEXT ASSEMBLY	SUPERSEDES	SUP. BY
T6-8	2	50131		
L-4B	2	50131		
L-4A	2	50131		
J3	2	50131		

ROD ASSEMBLY - DOOR PLUNGER

LET.	REVISION	DATE	BY
A	REDRAWN WITHOUT CHANGE	4-24-44	I.M.

PIPER AIRCRAFT CORP.
LOCK HAVEN, PENNA.

DRAWN	CHECKED	APPROVED
V. F. 10-16-41	R.C.M. 10-27-41	

50121

341

A341

WAS J3-A210

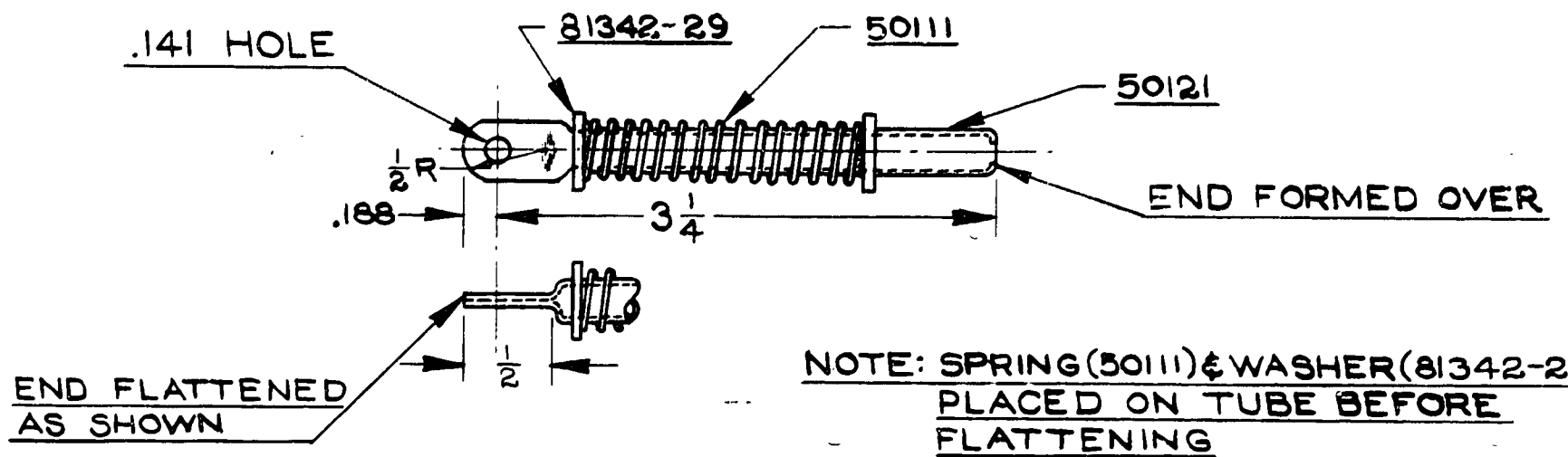

NOTE: SPRING (50111) & WASHER (81342-29) PLACED ON TUBE BEFORE FLATTENING

PART No.	No. REQ.	MATERIAL
81342-29	1	WASHER
50111	1	SPRING
50121	1	ROD ASSEMBLY

LIMITS, SHOP PRACTICES AND FINISH. UNLESS OTHERWISE NOTED, TO BE IN ACCORDANCE WITH PIPER SPECIFICATIONS #9 AND #10.

SCALE FULL SIZE | TOTAL WT. - LBS.

FINISH

PLUNGER ASSEMBLY - DOOR

MODEL	PER SHIP	NEXT ASSEMBLY	SUPERSEDES	SUP. BY
TG-8	2	50183		
L-4B	2	50183		
L-4A	2	50183		
J-3	2	50183		

LET.	REVISION	DATE	BY
C	REDRAWN & REVISED	4-24-44	A.J.N.

PIPER AIRCRAFT CORP.
LOCK HAVEN, PENNA.

V. F.	R.C.M.		
10-16-41	10-29-41		
DRAWN	CHECKED	APPROVED	50131

342

A342

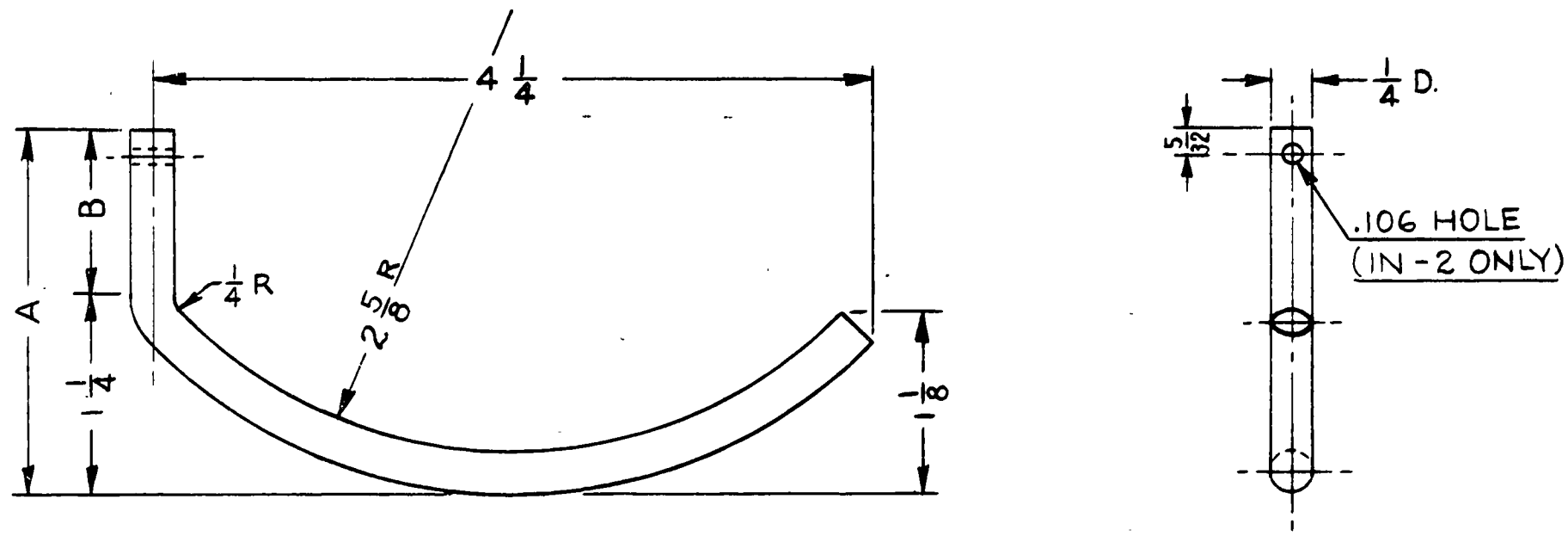

HANDLE	A	B	ROD LENGTH
50151	2 1/4	1	5 3/4
50151-2	2 15/32	1 7/32	5 31/32

PART NO.	NO. REQ.	SIZE	DESCRIPTION
		1/4 DIA. × NOTED	C. R. STEEL

MATERIAL

SCALE FULL SIZE | TOTAL WT.—LBS.

FINISH—PIPER SPECIFICATION # 10

MANUFACTURING PRACTICES—PIPER SPECIFICATION # 9

MODEL	PER PLANE	NEXT ASSEMBLY	SUPERSEDES	SUP. BY
~~T6-8~~	~~1~~	~~50173~~		
~~L-4B~~	~~1~~	~~50173~~		
~~L-4A~~	~~1~~	~~50173~~		
~~J3~~	~~1~~	~~50173~~	~~J3-267~~ J3-4203	

THIS DRAWING IS THE PROPERTY OF THE PIPER AIRCRAFT CORP. AND ITS POSSESSION BY UNAUTHORIZED PERSONS SHALL NOT BE CONSTRUED AS PERMISSION TO REPRODUCE FOR SALE IN WHOLE OR IN PART ANY DEVICES SHOWN THEREON.

HANDLE—DOOR

LET	REVISION	DATE	BY
B	REDRAWN WITHOUT CHANGE	6-21-51	C.K.
A	-2 ADDED	5-10-51	M.W.G.

PIPER AIRCRAFT CORP.
LOCK HAVEN, PENNA.

DRAFTSMAN	CHECKER	STANDARDS
V. F. 10-17-41	R. C. M. 10-27-41	

50151

343

A343

WAS J3-268

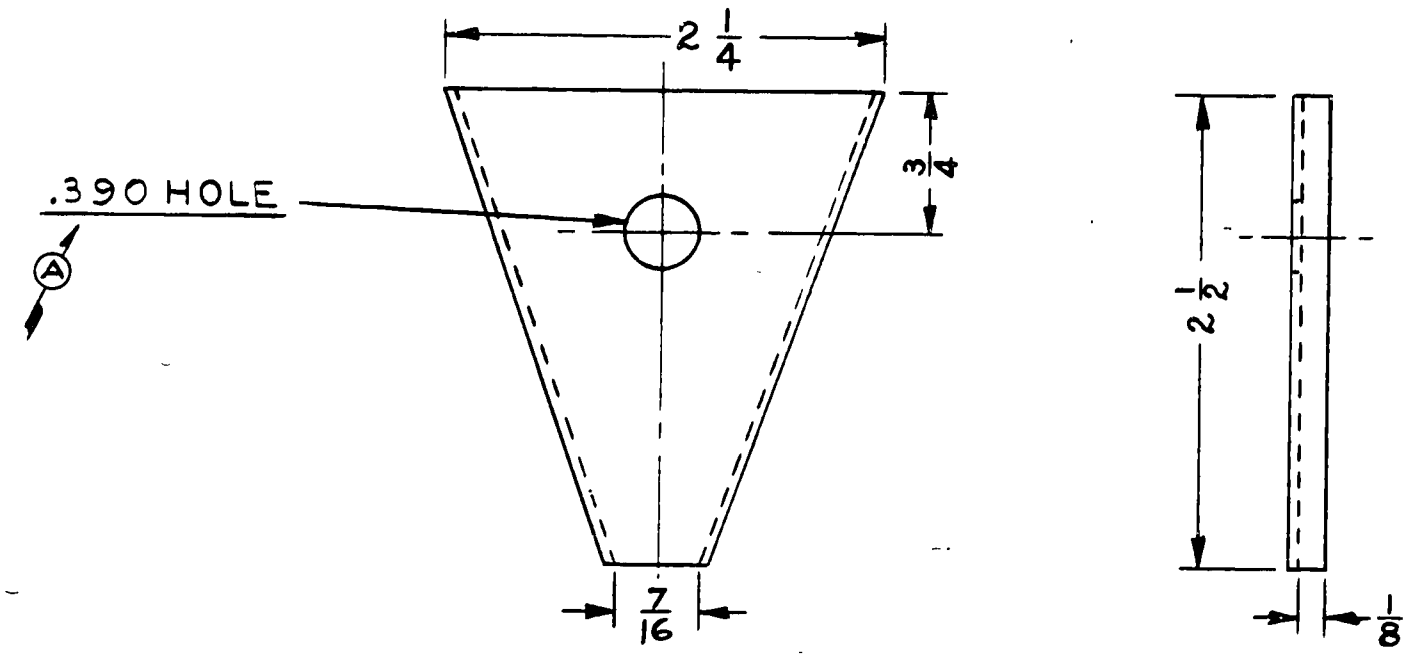

									.045 × 2½ × 2½	#1025 STEEL
									SIZE	DESCRIPTION
								PART NO.	NO. REQ.	MATERIAL
								SCALE FULL SIZE		TOTAL WT.—LBS.
								FINISH—PIPER SPECIFICATION # 10		
								MANUFACTURING PRACTICES—PIPER SPECIFICATION # 9		
				TG-8	1	50173		BRACKET-FUSELAGE DOOR HANDLE		
				L-4B	1	50173				
				L-4A	1	50173				
				J3	1	50173				
				MODEL	PER PLANE	NEXT ASSEMBLY	SUPERSEDES	SUP. BY		
				THIS DRAWING IS THE PROPERTY OF THE PIPER AIRCRAFT CORP. AND ITS POSSESSION BY UNAUTHORIZED PERSONS SHALL NOT BE CONSTRUED AS PERMISSION TO REPRODUCE FOR SALE IN WHOLE OR IN PART ANY DEVICES SHOWN THEREON.						
B	REDRAWN WITHOUT CHANGE	6-21-51	C.K.	PIPER AIRCRAFT CORP. LOCK HAVEN, PENNA.					10-17-41	R. C. M.		50161
A	.390 HOLE WAS 3/8 DRILL	5-7-43	C.E.K.						V. F.	10-27-41		
LET	REVISION	DATE	BY						DRAFTSMAN	CHECKER	STANDARDS	

344

A344

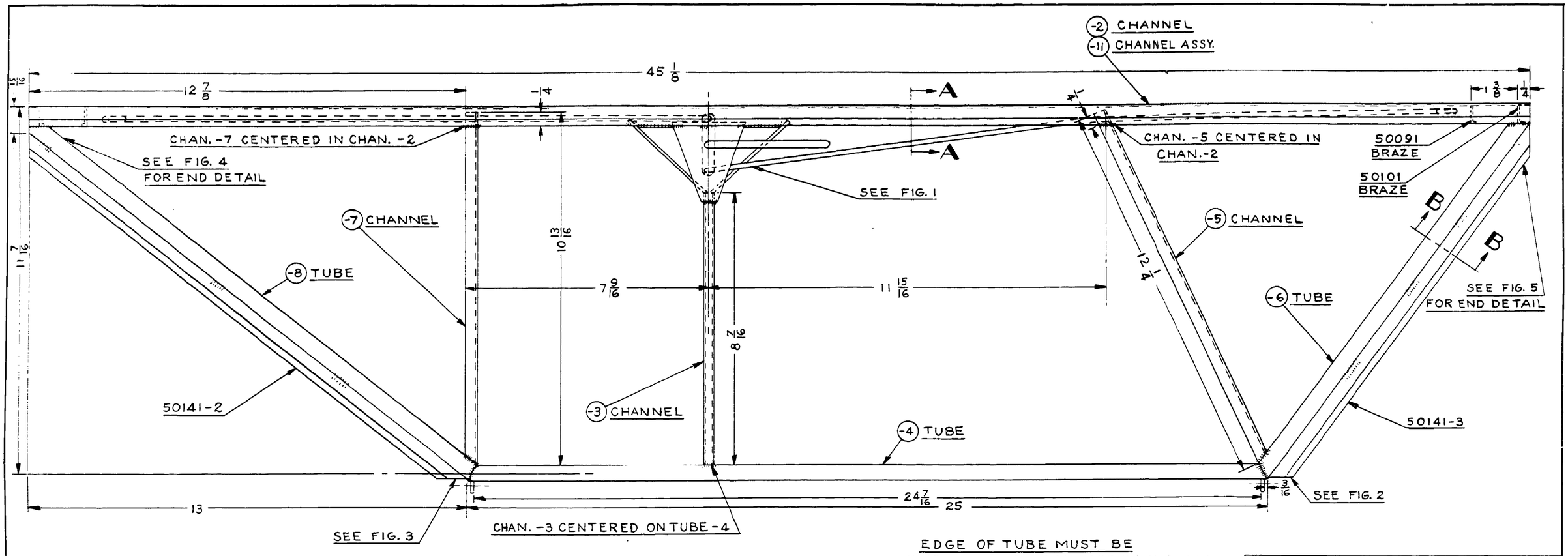

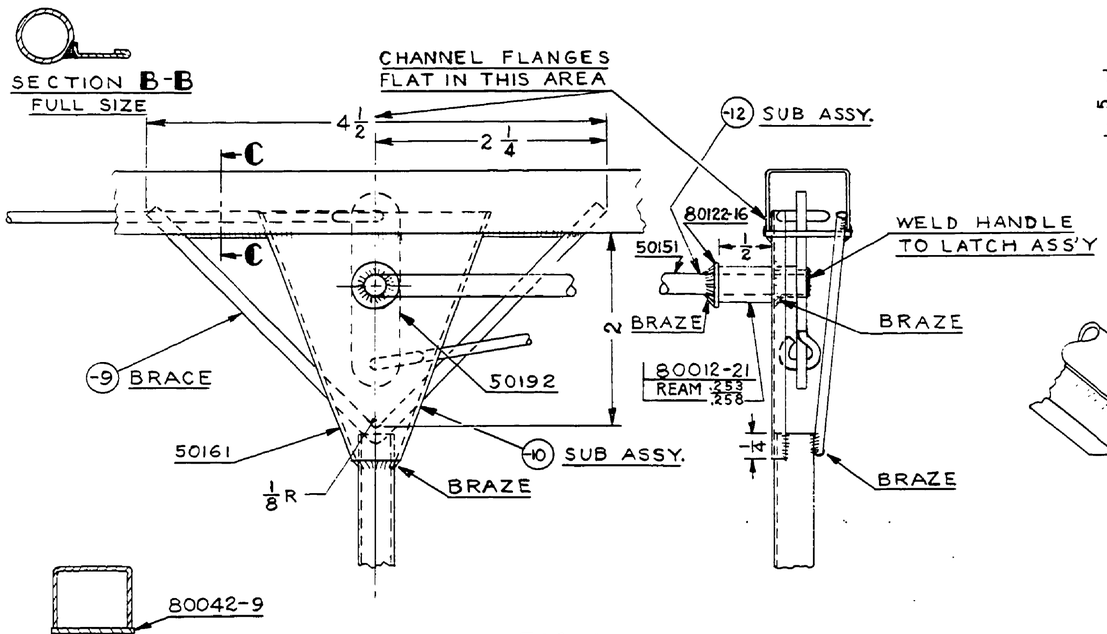

FIG. 1
DOOR HANDLE & LATCH INSTALLATION
FULL SIZE

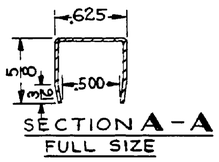

EDGE OF TUBE MUST BE
FLUSH WITH OUTSIDE FACE OF CHANNEL

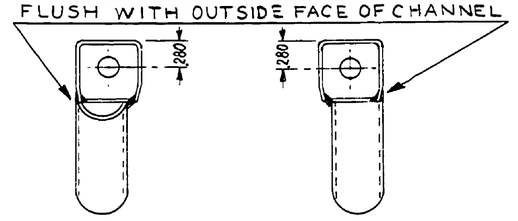

FIG. 4 FIG. 5
FULL SIZE

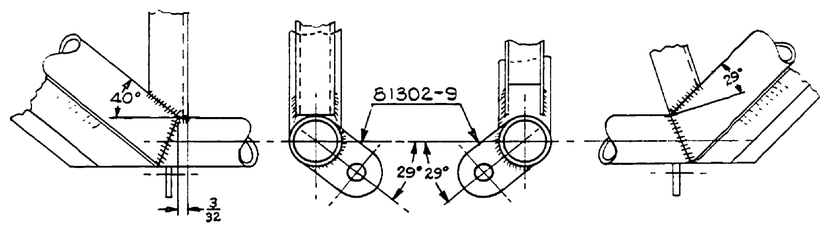

FIG. 3
FULL SIZE

FIG. 2
FULL SIZE

PART No.	No. REQ.	SIZE	DESCRIPTION / MATERIAL
84501	REF		CHANNEL SECTION
81302-9	2		LUG
80122-16	1		WASHER
80042-9	2		PLATE
80012-21	1		BUSHING
50192	1		LATCH ASSY
50161	1		BRACKET
50151	1		HANDLE
50141-3	1		FAIRING STRIP
50141-2	1		FAIRING STRIP
50101	2		GUIDE
50091	2		STOP
-12	-		SUB ASSY CONSISTS OF 50151 & 80122-16
-11	-		SUB ASSY CONSISTS OF -2, 2 OF 50091 & 2 OF 50101
-10	-		SUB ASSY OF 50161, 80012-21, 50173-3 & 50173-9
-9	1	1/8×69/16 LONG	#1010 C.F. STEEL WIRE
-8	1	1/2×.028×17 5/16	#1025 STEEL
-7	1	10 13/16 LONG	PIPER SECTION 84501-2
-6	1	1/2×.028×13 1/4	#1025 STEEL
-5	1	12 1/4 LONG	PIPER SEC. 84501-2
-4	1	1/2×.028×25	#1025 STEEL
-3	1	8 7/16 LONG	PIPER SEC. 84501-2
-2	1	.032×1 7/8×45 1/8	#1025 STEEL

THIS DRAWING IS THE PROPERTY OF THE PIPER AIRCRAFT CORP. AND ITS POSSESSION BY UNAUTHORIZED PERSONS SHALL NOT BE CONSTRUED AS PERMISSION TO REPRODUCE FOR SALE, IN WHOLE OR IN PART. ANY DEVICES SHOWN THEREON

LET.	REVISION	DATE	BY
AE	REDRAWN & REVISED	6-22-51	C.K.

MODEL	PER PLANE	NEXT ASSEMBLY	SUPERSEDES	SUP. BY

SCALE 6 IN. = 1 FT. & NOTED — TOTAL WT.—LBS.
FINISH—PIPER SPECIFICATION #10
MANUFACTURING PRACTICES—PIPER SPECIFICATION #9

PIPER AIRCRAFT CORP.
LOCK HAVEN, PENNA.

FRAME ASSY— DOOR

C. E. K.	J. E. M.		50173
6-22-51	6-29-51		
DRAFTSMAN	CHECKER	STANDARDS	

812

A812

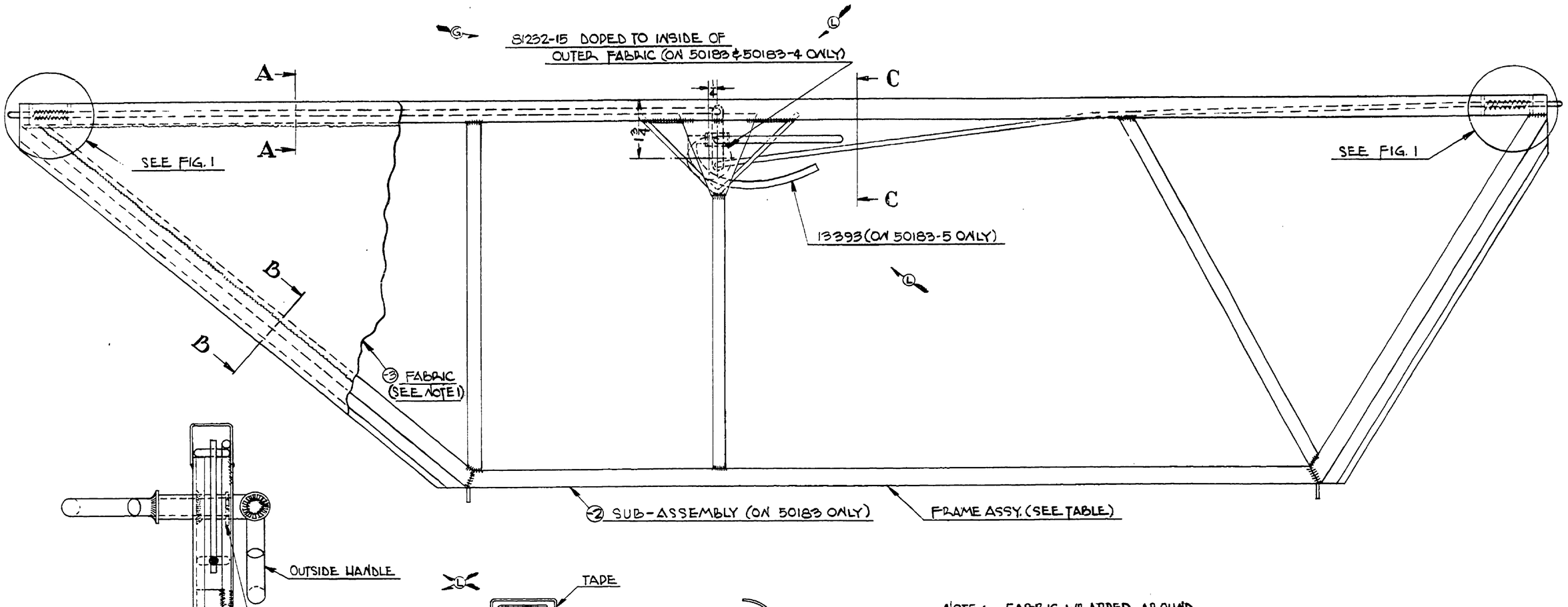

DOOR ASSY.	FRAME ASSY.	REMARKS
50183	50173	-
50183-4	12257	-
50183-5	12257-8	WITH OUTSIDE HANDLE ADDED AS SHOWN IN SEC. C-C

FIG. 1
DOOR PLUNGER INSTALLATION
FULL SIZE

		2 x 100	PINKED TAPE - SAE SPEC. AMS 3804
AN38033	1	COTTER PIN (ON 50183-5 ONLY)	
81232-15	1	DISC. (ON 50183 & 50183-4 ONLY)	
50173	1	FRAME ASSY. (ON 50183 ONLY)	
50131	2	PLUNGER ASSY.	
13393	1	HANDLE ASSY. (ON 50183-5 ONLY)	
12257-8	1	FRAME ASSY.	ON 50183-5 ONLY
12257			ON 50183-4 ONLY
-3	2	14 x 48	FABRIC - SAE SPEC. AMS 3804
-2	–	(ON 50183 ONLY) SUB-ASSY. CONSISTS OF 50173 & 2 OF 50131	

PART NO.	NO. REQ.	SIZE / DESCRIPTION / MATERIAL
SCALE HALF SIZE & NOTED		TOTAL WT. – LBS.
FINISH – PIPER SPECIFICATION #10		
MANUFACTURING PRACTICES – PIPER SPECIFICATION #9		

LET.	REVISION	DATE	BY
M	REDRAWN WITHOUT CHARGE	6-15-51	MWG
L	AN380-3-3, 13393, 12257-8, 50183-5 & NOTE ADDED	5-11-51	MWG
K	-4 ADDED	2-28-49	H.R.P.
J	FABRIC & PINKED TAPE SPEC. REV.	10-28-46	D.B.
H	J9 N.A. 54525 WAS 55593	9-4-45	D.B.
G	81232-15 ADDED	3-31-45	E.L.N.
F	MAT'L SPEC. REVISED	12-16-43	L.M.M.
E	J9 NEXT ASSY 55593 WAS 50523	11-24-43	M.G.S.
D	-3 DETAIL ADDED	8-23-43	W.G.T.
C	L-4A NEXT ASSY. 55593 WAS 50523	4-8-43	J.E.C.
B	NOTE ADDED	3-26-42	C.E.V.
A	FIG. 1. REMOVED	3-25-42	C.E.V.

MODEL	PER PLANE	NEXT ASSEMBLY	SUPERSEDES	SUP. BY
J-5	1	50523		
J-5A	1	50523		
J-4A	1	55593		
J5	1	54525		

THIS DRAWING IS THE PROPERTY OF THE PIPER AIRCRAFT CORP. AND ITS POSSESSION BY UNAUTHORIZED PERSONS SHALL NOT BE CONSTRUED AS PERMISSION TO REPRODUCE FOR SALE, IN WHOLE OR IN PART, ANY DEVICES SHOWN THEREON

PIPER AIRCRAFT CORP.
LOCK HAVEN, PENNA.

DOOR ASSEMBLY

V.F.	B.C.M.		
10-22-41	10-29-41		50183
DRAFTSMAN	CHECKER	STANDARDS	

NOTE 1:
INTERIOR DOOR FABRIC ON 50183-4 ONLY SHALL BE TREATED WITH EMYCEL PRIMER #3420 PRIOR TO APPLICATION OF STANDARD FINISH PER PIPER SPEC. #10.

A813

WAS J3-A222

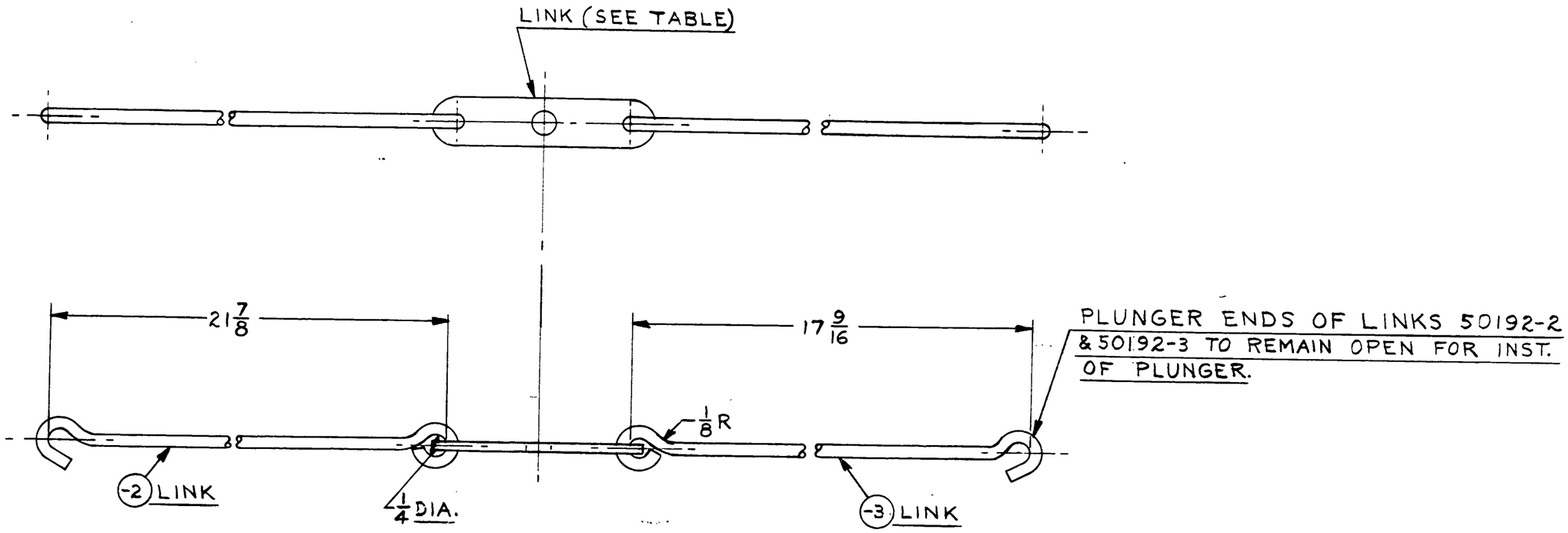

ASSY. NO.	LINK NO.
50192	81352-7
50192-4	13417

PART No.	No. REQ.	SIZE	DESCRIPTION / MATERIAL
13417	1	LINK (SEE TABLE)	
81352-7			
-3	1	.125 DIA. x 19 7/8	WELDING ROD
-2	1	.125 DIA. x 23 13/16	WELDING ROD

SCALE FULL SIZE — TOTAL WT.—LBS.

FINISH—PIPER SPECIFICATION #10

MANUFACTURING PRACTICES—PIPER SPECIFICATION #9

LATCH ASSY. — DOOR

THIS DRAWING IS THE PROPERTY OF THE PIPER AIRCRAFT CORP. AND ITS POSSESSION BY UNAUTHORIZED PERSONS SHALL NOT BE CONSTRUED AS PERMISSION TO REPRODUCE FOR SALE, IN WHOLE OR IN PART, ANY DEVICES SHOWN THEREON

MODEL	PER PLANE	NEXT ASSEMBLY	SUPERSEDES	SUP. BY

LET.	REVISION	DATE	BY
H	REDRAWN & REVISED	5-23-51	C.K.

PIPER AIRCRAFT CORP.
LOCK HAVEN, PENNA.

DRAFTSMAN	CHECKER	STANDARDS
C. E. K. 5-23-51	H. R. K. 5-23-51	

50192

6 5 6

A656

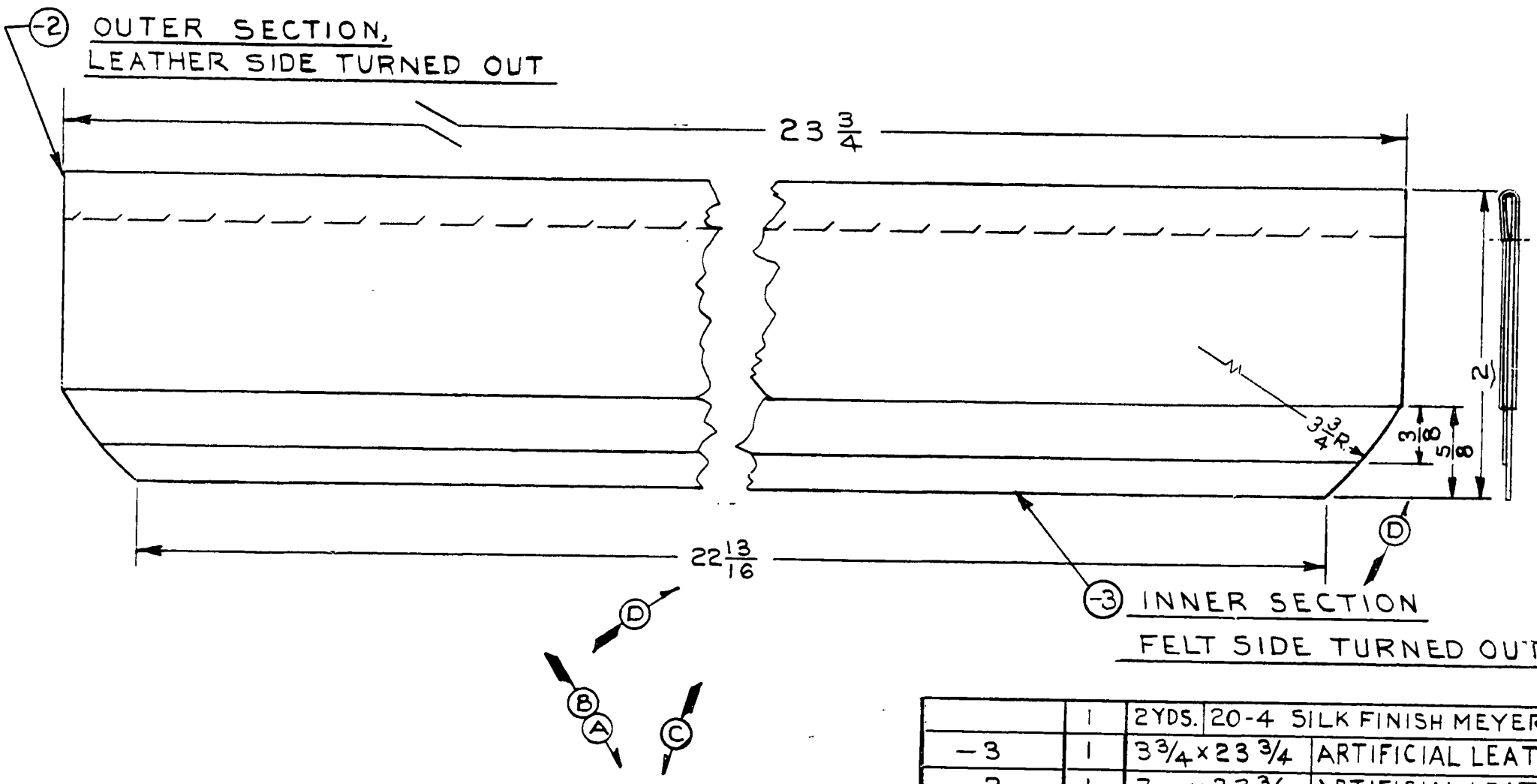

	1	2YDS.	20-4 SILK FINISH MEYERS THD.
-3	1	3 3/4 x 23 3/4	ARTIFICIAL LEATHER
-2	1	3 x 23 3/4	ARTIFICIAL LEATHER
PART NO.	NO. REQ.	SIZE	DESCRIPTION MATERIAL

SCALE FULL SIZE | TOTAL WT.—LBS.

FINISH—PIPER SPECIFICATION # 10

MANUFACTURING PRACTICES—PIPER SPECIFICATION # 9

MODEL	PER PLANE	NEXT ASSEMBLY	SUPERSEDES	SUP. BY
J-3	1	50523		
L-4B	1	50523		
L-4A	1	53593		
J-3	1	54525		

LET	REVISION	DATE	BY
E	REDRAWN WITHOUT CHANGE	6-4-51	I.M.M.
D	3/8 WAS 1/8, 5/8 WAS 1/8, 22 13/16 WAS 21 3/4	9-14-50	K.D.D.
C	J-3 N.A. 54525 WAS 53593	9-4-45	D.B.
B	J-3 NEXT ASSY. 53593 WAS 50523	11-24-43	M.G.S.
A	L-4A NEXT ASSY 53593 WAS 50523	4-8-43	J.E.C.

THIS DRAWING IS THE PROPERTY OF THE PIPER AIRCRAFT CORP. AND ITS POSSESSION BY UNAUTHORIZED PERSONS SHALL NOT BE CONSTRUED AS PERMISSION TO REPRODUCE FOR SALE IN WHOLE OR IN PART ANY DEVICES SHOWN THEREON.

PIPER AIRCRAFT CORP.
LOCK HAVEN, PENNA.

WEATHERSTRIP ASSY.— ENCLOSURE DOOR

G-WINDER	C.F.S.		52841
8-20-42	8-25-42		
DRAFTSMAN	CHECKER	STANDARDS	

345

A345

MODEL	PER SHIP	NEXT ASSEMBLY
L-4A	25	SEE NOTE
J3	20	
J5C, J5D	8	
HE-1	14	

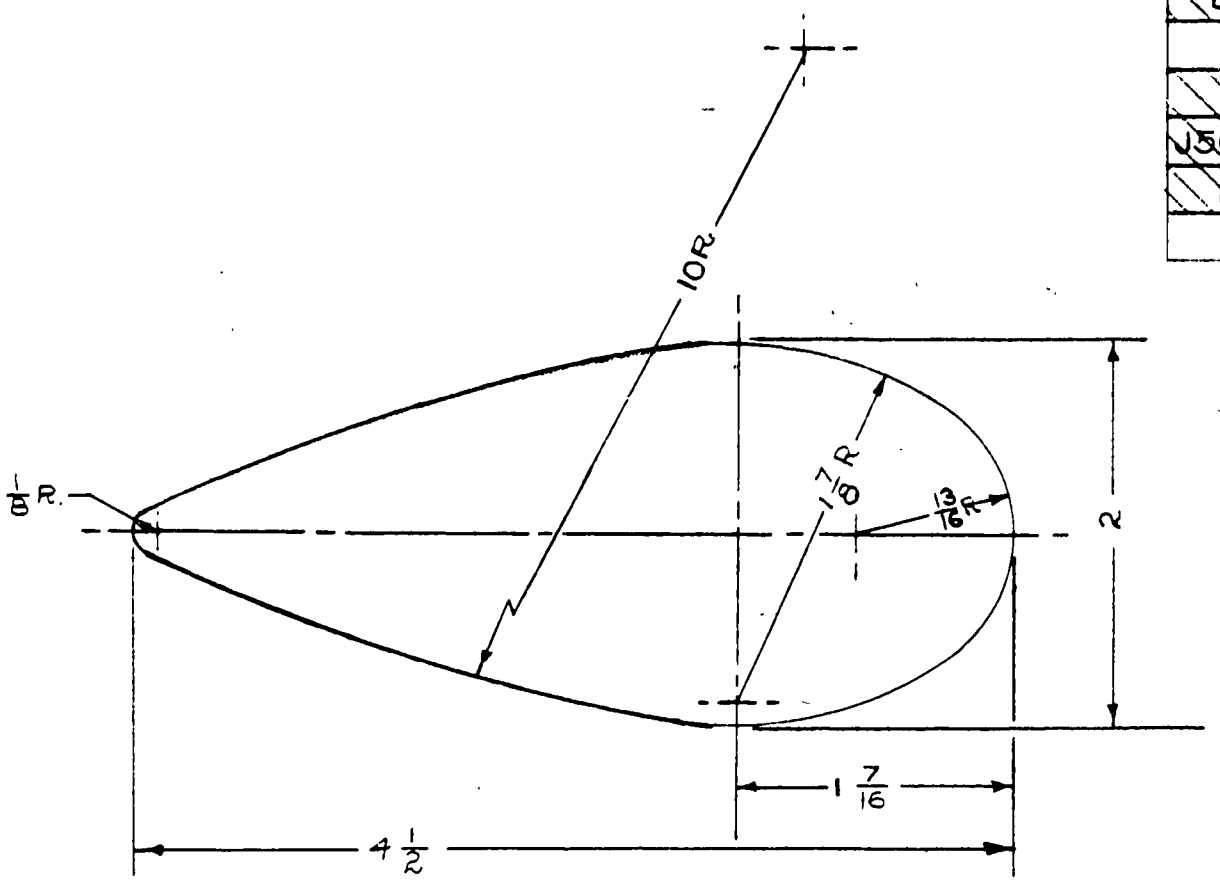

NOTE:- FOR OTHER REINFORCEMENTS MADE FROM PART SEE DWG. 60863

LIMITS, SHOP PRACTICES AND FINISH, UNLESS OTHERWISE NOTED, TO BE IN ACCORDANCE WITH PIPER SPECIFICATIONS #9 AND #10.

LET.	REVISION	DATE	SR.	BY
K	20 PER PLANE FOR J3 WAS 19	4-29-46		C.E.V.
J	MAT'L. SPEC. REVISED	4-26-44		V.P.
H	REDRAWN & REVISED	7-27-43		R.E.T.

NOTED MODEL	NOTED PER SHIP	NOTED NEXT ASSEMBLY	SUPERSEDES	SUPERSEDED BY

PIPER AIRCRAFT CORP.
LOCK HAVEN, PENNA.

PART No.	No. REQ.	SIZE	DESCRIPTION MATERIAL
		2×4½	ARTIFICIAL LEATHER— RAISED NAP—~~#ST-600-20~~ PURCH. ZAPON KERATOL DIV. ATLAS POWDER CO. OR EQUIV.

SCALE FULL SIZE

REINFORCEMENT— FABRIC

DRAWN	CHECKED	APPROVED
R.E.T. 7-27-43	C.K. 7-30-43	

60481

NO. 198-M ALBANENE A. & B. SMITH CO., PGH., PA.

346

A346

WAS 6064-R & 6064-L
D 691-A

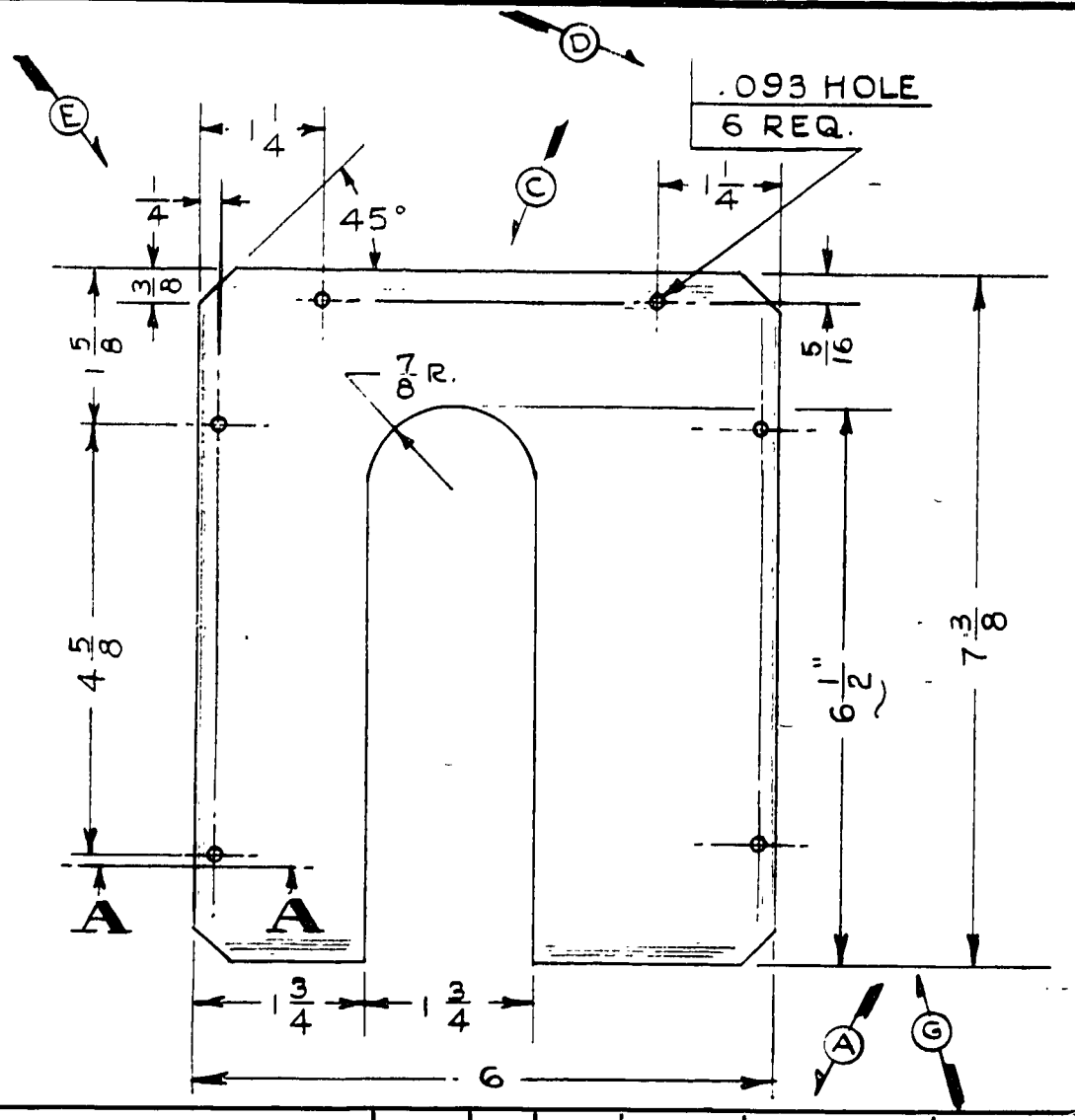

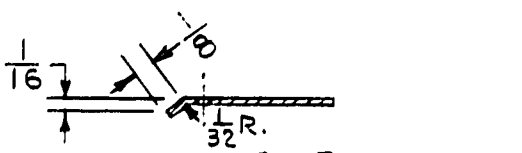

SECTION A-A
FULL SIZE



60571 L.H. SHOWN
60571-1 R.H. BENT OPP

LET	REVISION	DATE	BY
H	REDRAWN WITHOUT CHANGE	6-19-51	I.M.M.
G	6 1/2 WAS 5 7/8	12-30-46	H.M.Z.
F	J5C MODEL REF. ADDED	4-5-46	L.R.
E	1/4 WAS 3/16	10-22-43	I.M.M.
D	.093 HOLES ADDED	10-22-43	C.E.K.
C	FABRIC BRAKE WAS 3/16 BEAD	10-22-43	C.E.K.
B	SEC. A-A ADDED	10-22-43	C.E.K.
A	REF. HE-1, J5, J5C REMOVED	11-12-42	C.E.K.

MODEL	PER PLANE	NEXT ASSEMBLY	SUPERSEDES	SUP. BY
J5C	1L. NR.	10078		
L-4B	1L. 1R.	41195		
L-4A	1L. 1R.	41195		
J3,TG-8	1L. 1R.	41195		

THIS DRAWING IS THE PROPERTY OF THE PIPER AIRCRAFT CORP. AND ITS POSSESSION BY UNAUTHORIZED PERSONS SHALL NOT BE CONSTRUED AS PERMISSION TO REPRODUCE FOR SALE IN WHOLE OR IN PART ANY DEVICES SHOWN THEREON.

PIPER AIRCRAFT CORP.
LOCK HAVEN, PENNA.

PART NO.	NO. REQ.	SIZE	MATERIAL
		.020 x 6 x 7 3/8	35 1/2H. ALUM.

SCALE HALF SIZE | TOTAL WT.—LBS.
FINISH—PIPER SPECIFICATION # 10
MANUFACTURING PRACTICES—PIPER SPECIFICATION # 9

PLATE—STABILIZER YOKE COVER

DRAFTSMAN	CHECKER	STANDARDS	
M.G.S. 3-21-42	C.F.S. 4-28-42		60571

347

A347

WAS 6109 / D6037-B

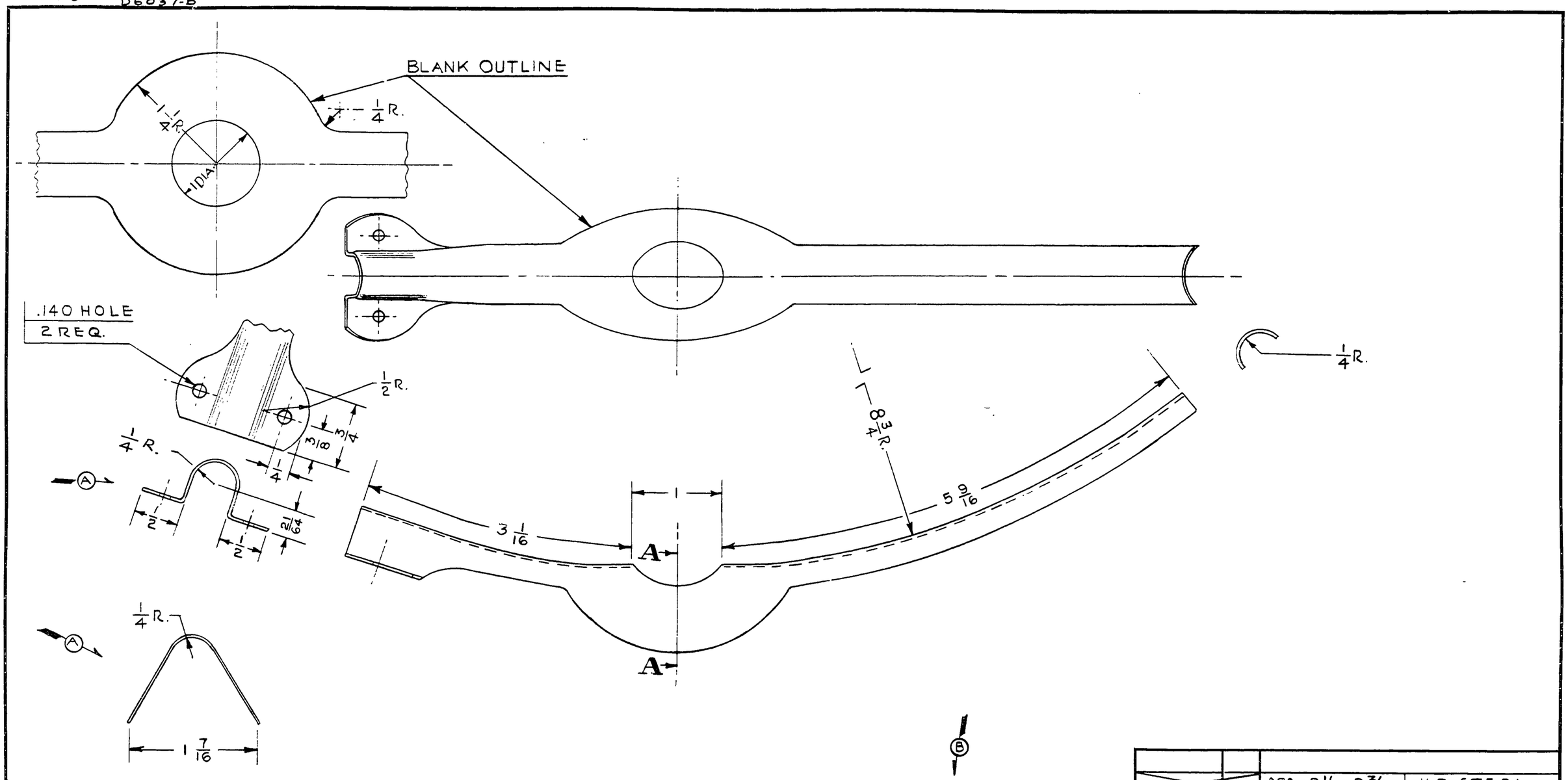

LET	REVISION	DATE	BY
C	REDRAWN WITHOUT CHANGE	6-21-51	I.M.M.
B	J3 NEXT ASS'Y. 24146 WAS 41682	10-7-43	M.G.S.
A	VIEWS REVISED	9-6-43	C.E.K.

MODEL	PER PLANE	NEXT ASSEMBLY	SUPERSEDES	SUP. BY
L-4B, T6B	1	41682		
HE-L, J5B	1	41682		
J5, J5C	1	41682		
L-4A	1	41682		
J3	1	24146		

THIS DRAWING IS THE PROPERTY OF THE PIPER AIRCRAFT CORP. AND ITS POSSESSION BY UNAUTHORIZED PERSONS SHALL NOT BE CONSTRUED AS PERMISSION TO REPRODUCE FOR SALE IN WHOLE OR IN PART ANY DEVICES SHOWN THEREON.

PIPER AIRCRAFT CORP.
LOCK HAVEN, PENNA.

PART NO.	NO. REQ.	SIZE	DESCRIPTION
		.020 × 2 1/2 × 9 3/4	H.R. STEEL

MATERIAL

SCALE FULL SIZE — TOTAL WT.—LBS.

FINISH—PIPER SPECIFICATION # 10

MANUFACTURING PRACTICES—PIPER SPECIFICATION # 9

FAIRING — FIN LEADING EDGE

DRAFTSMAN	CHECKER	STANDARDS
M.G.S. 3-25-42	C.F.S. 5-1-42	

60602

657

A657

WAS 6104 / D6034-A

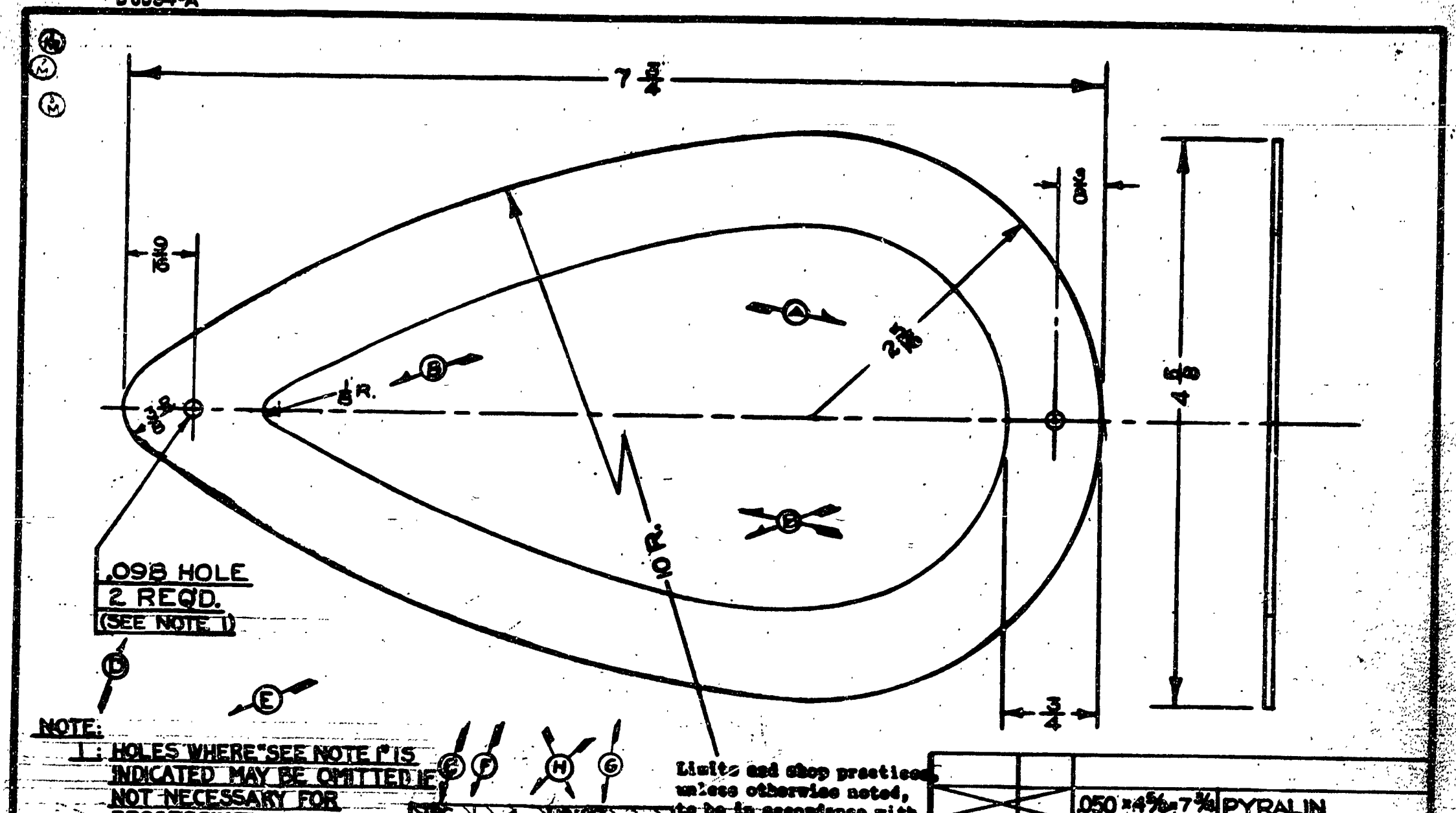

NOTE:
1: HOLES WHERE "SEE NOTE 1" IS INDICATED MAY BE OMITTED IF NOT NECESSARY FOR PROCESSING.

Limits and shop practices, unless otherwise noted, to be in accordance with Piper Specification #[illegible]

REV.	REVISION	DATE	SR.	BY
H	[illegible] WAS 11873-4 WAS 2	[illegible]		L.E.K.
G	[illegible]	[illegible]		I.D.B.
F	L-14 MODEL REF. ADDED	3-22-45		I.D.B.
E	NOTE 1 ADDED	4-24-44		R.D.R.
D	.098 HOLES ADDED	[illegible]		R.E.T.
C	[illegible] MODEL REF. ADDED	[illegible]		M.G.S.
B	10" R. & 1/8" R. ADDED	[illegible]		M.G.S.
A	2 5/16" R. WAS 2 1/4"	[illegible]		M.G.S.

MODEL	PER SHIP	NEXT ASSEMBLY	SUPERSEDES	SUPERSEDED BY
[illegible]	4	10127		
L-14	2	30600		
L-48	2	13363		
[illegible]	2	11873		
[illegible]	2	11873		
[illegible]	2	13363		
[illegible]	2	[illegible]		

PART No.	No. REQ.	SIZE	DESCRIPTION
		.050 × 4 5/8 × 7 3/4	PYRALIN

MATERIAL

SCALE FULL SIZE

GROMMET

PIPER AIRCRAFT CORP.
LOCK HAVEN, PENNA.

DRAWN	CHECKED	APPROVED
N.R.K. 4-13-42	McRAE 4-30-42	

60671

A348

WAS 6079 L & R
D6010-A

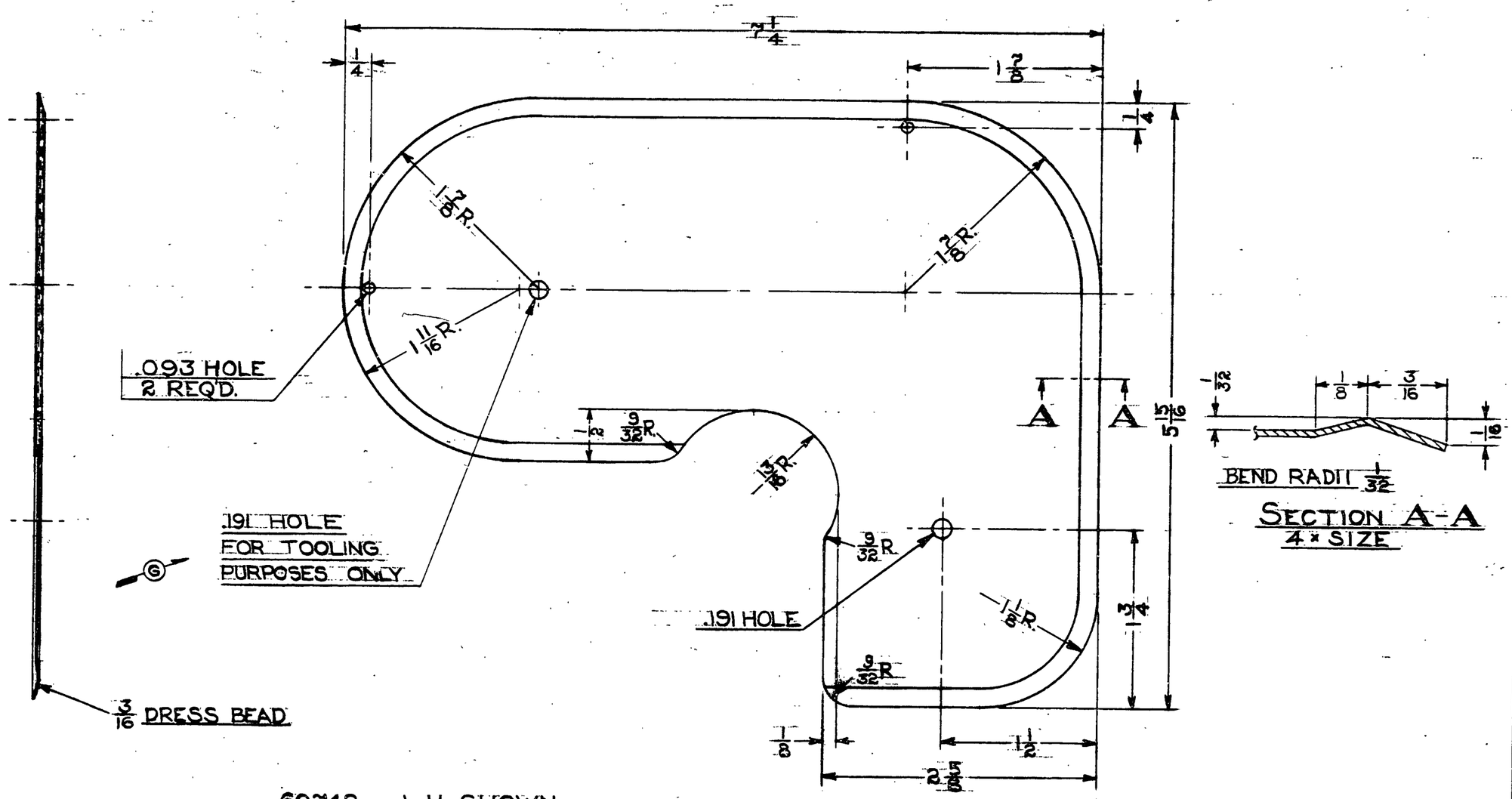

60742 L.H. SHOWN
60742-1 R.H. BEADED OPPOSITELY

H J

LIMITS, SHOP PRACTICES AND FINISH. UNLESS OTHERWISE NOTED, TO BE IN ACCORDANCE WITH PIPER SPECIFICATIONS #9 AND #10.

PART No.	No. REQ.	SIZE	DESCRIPTION
		.016 × 5 15/16 × 7 1/4	3S-1/2 H ALUM.

MATERIAL

SCALE FULL SIZE & NOTED | TOTAL WT.-LBS.
FINISH

LET.	REVISION	DATE	BY
J	J5C N.A. 15078 WAS 41195	3-25-45	[illegible]
H	L-14 MODEL REF. ADDED	7-3-45	E.L.N.
G	.191 HOLE ADDED FOR TOOLING	7-7-44	A.J.N.
F	REDRAWN & REVISED	12-14-43	H.K.

MODEL	PER SHIP	NEXT ASSEMBLY	SUPERSEDES	SUP. BY
L-14	N.L.R.	50600		
L-14A	N.L.R.	41195	60631	
J3	N.L.R.	41195	60631	
J5C	N.L.R.	10078		

PIPER AIRCRAFT CORP.
LOCK HAVEN, PENNA.

PANEL-TAIL INSPECTION

DRAWN	CHECKED	APPROVED
H.R.K. 12-14-43	M.G.S. 12-14-43	

60742

A658

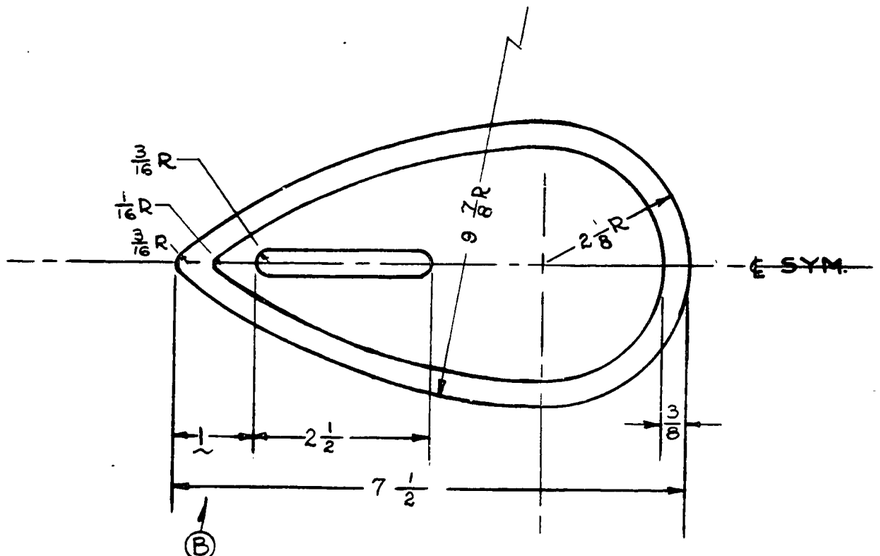

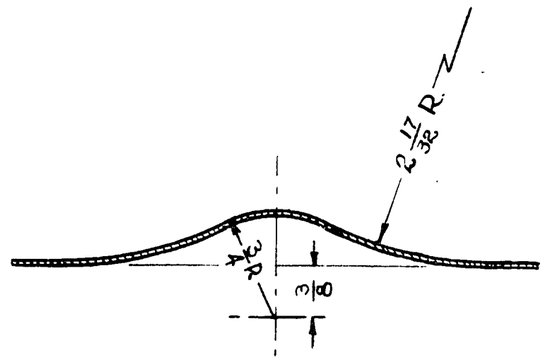

SECTION A-A
FULL SIZE

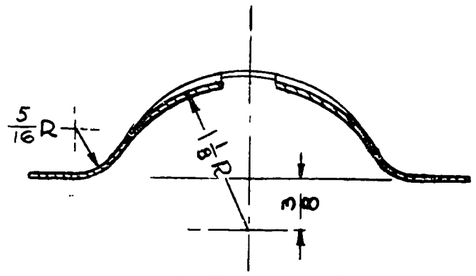

SECTION C-C
FULL SIZE

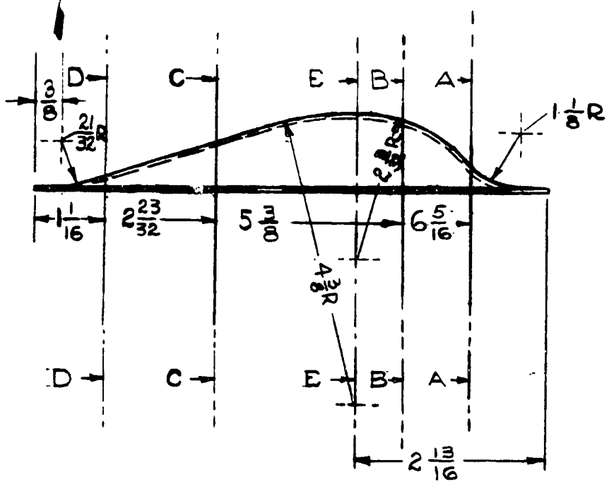

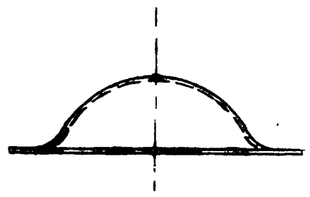

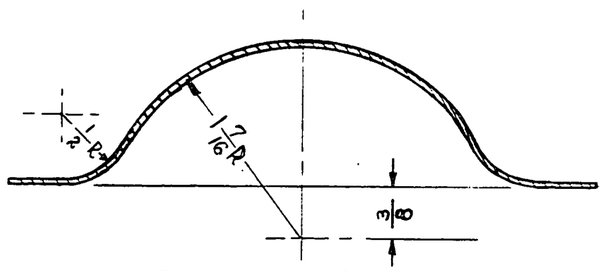

SECTION B-B
FULL SIZE

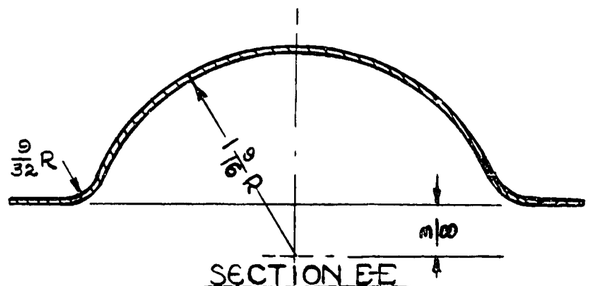

SECTION E-E
FULL SIZE

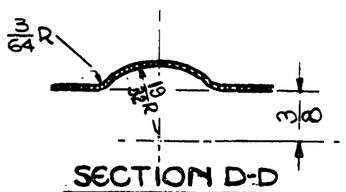

SECTION D-D
FULL SIZE

LIMITS, SHOP PRACTICES AND FINISH. UNLESS OTHERWISE NOTED, TO BE IN ACCORDANCE WITH PIPER SPECIFICATIONS #9 AND #10.

LET.	REVISION	DATE	BY
B	I WAS 1 3/16	6-17-46	E.L.M
A	REDRAWN & REVISED	11-17-43	F.J.D

MODEL	PER SHIP	NEXT ASSEMBLY	SUPERSEDES	SUP. BY
L-4A	2	14881		
NJ	2	14881		

PIPER AIRCRAFT CORP.
LOCK HAVEN, PENNA.

PART No.	No. REQ.	SIZE	DESCRIPTION
		.032 × 6 × 9	3S-0 ALUM.
		MATERIAL	

SCALE 6 IN. = 1 FT & NOTED | TOTAL WT. - LBS.

FINISH

COVER-WING PULLEY

DRAWN	CHECKED	APPROVED
F.J.D. 11-17-43	M.G.S. 12-7-43	

60752

659

A659

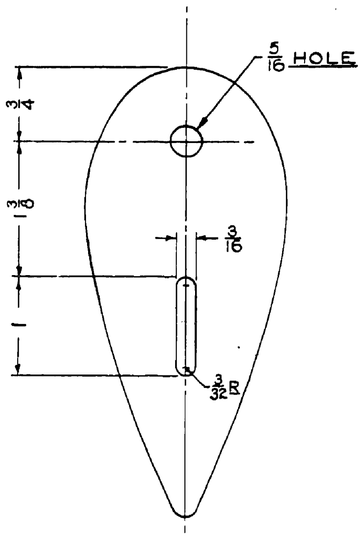

(-2) REINFORCEMENT

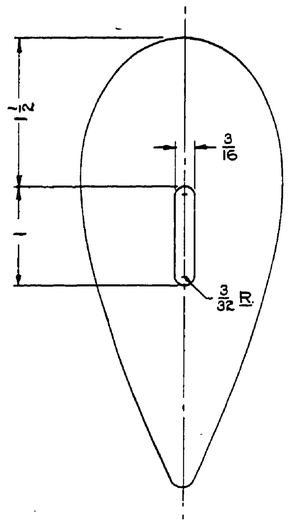

(-3) REINFORCEMENT

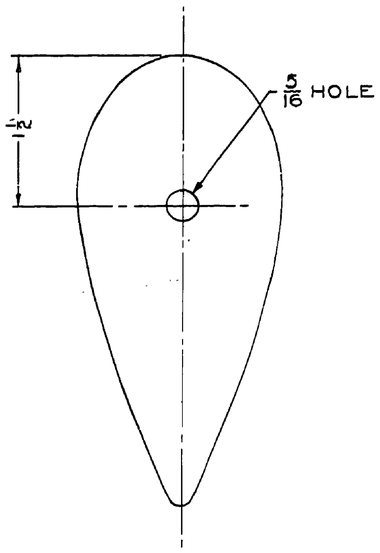

(-5) REINFORCEMENT

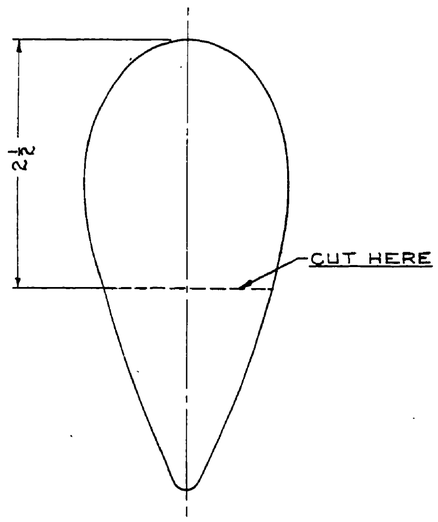

(-9) REINFORCEMENT

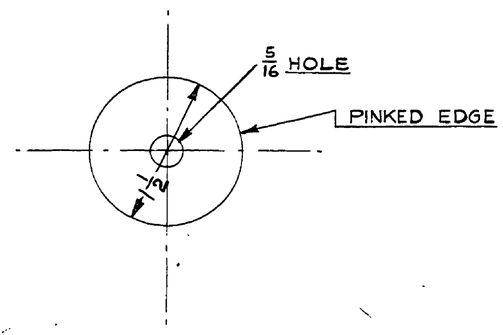

(-11) REINFORCEMENT

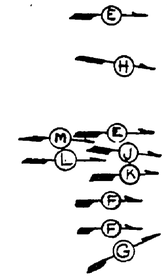

PART NO.	MODEL	PERSHIP	NEXT ASSEMBLY
60863-2	L-4A	1	13363
	J3	1	13363, 16243
60863-3	L-4A	9	13363, 24235
	J3	9	13363, 16243, 24166
	J5C	2	24195
	L-14	2	91100
60863-5	L-4A	13	13363, 24235, 31463
	J3	8	13363, 24166, 10032
	J5C	2	16543
	J4	2	16684
	J5	2	16674
	L-14	2	20195, 30196
60863-9	L-4A	2	13363
	J3	2	13363, 16243
60863-11	J5C	2	10027

NOTE: FOR INFORMATION NOT SHOWN SEE DWG., NO. 60481.

-11	X	1 1/2 DIA	ARTIFICIAL LEATHER - RAISED NAP - #BT-688-20 PURCH. ZAPON KERATOL DIV. ATLAS POWDER CO., OR EQUIV.
-10	X	THESE PARTS OBSOLETE SEE DWG. SAME NO., DATED 8-13-43	
-8			
-7			
-6			
-4			
-9	X	2 × 4 1/2	ARTIFICAL LEATHER - RAISED NAP - #BT-688-20 PURCH. ZAPON KERATOL DIV. ATLAS POWDER CO., OR EQUIV.
-5			
-3			
-2			
60481	-	REINFORCEMENT (SEE NOTE)	
PART NO.	NO. REQ.	SIZE	DESCRIPTION
		MATERIAL	

LIMITS, SHOP PRACTICES AND FINISH. UNLESS OTHERWISE NOTED, TO BE IN ACCORDANCE WITH PIPER SPECIFICATIONS #9 AND #10.

LET.	REVISION	DATE	BY
N	J5C N.A. 14053 REM. FOR -5	11-28-45	E.L.N.
M	J3 11 PER SHIP WAS 13 FOR -5	11-29-45	I.D.B.
L	J3 N.A. 10032 WAS 31463 FOR -5	8-27-45	E.L.N.
K	J5C 2 PER SHIP WAS 6 FOR -5	8-25-45	I.M.M.
J	J5C N.A. 30963 REM. FOR -5	8-25-45	I.M.M.
H	L-14 MODEL REF. ADDED FOR -3	6-14-45	I.M.M.
G	L-14 MODEL REF. ADDED FOR -5	3-2-45	E.L.N.
F	J4 & J5 MODEL REF. ADDED FOR -5	12-1-44	J.B.W.
E	L-14 N.A. 24235 FOR -3 & -5 WAS 23865	6-26-44	J.B.M.
D	MAT'L SPEC. REVISED	4-26-44	V.P.
C	REDRAWN & REVISED	1-6-44	R.E.T.

LET.	REVISION	DATE	BY
S	NOTE ADDED	2-5-47	T.N.K.
R	J5C MODEL REF. CANC. FOR -5	6-12-46	R.J.C.
Q	N.A. REF. 16243 SOF -5 REM. FOR J3	5-1-46	C.E.V.
P	5 PER SHIP OF -5 FOR J3 WAS 11	4-30-46	C.E.V.
O	-11 ADDED	3-14-46	C.E.K.

MODEL	PER SHIP	NEXT ASSEMBLY	SUPERSEDES	SUP. BY
NOTED	NOTED	NOTED		

PIPER AIRCRAFT CORP.
LOCK HAVEN, PENNA.

SCALE FULL SIZE — TOTAL WT. - LBS.
FINISH

REINFORCEMENTS - FABRIC

DRAWN	CHECKED	APPROVED
R.E.T. 1-6-44	M G S 1-12-44	

60863

814

A814

WAS A750 / D793-A

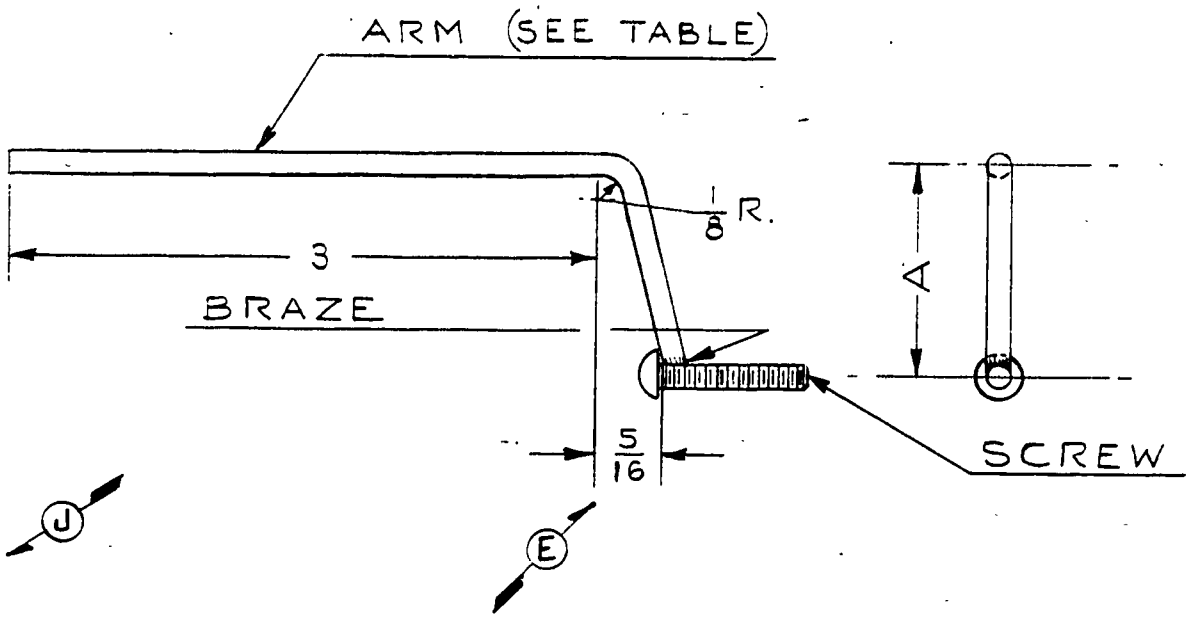

ASS'Y NO.	ARM NO.	A
70251	70251-2	1 1/8
70251-3	70251-4	7/8

				J3F-65		70562			
K	REDRAWN WITHOUT CHANGE	5-24-51	I.M.M.	J3L-65		70562			
J	-3, -4 & TABLE ADDED	11-22-49	K.D.D	J4					
H	J5C-65 MODEL REF. CANCELLED	1-11-45	J.B.W.	L-4A		70232			
G	J3 1 PER SHIP WAS 2	3-28-44	R.D.R.	J5C-65		70562			
F	J3 NA. 70232 REMOVED	3-28-44	R.D.R.	MODEL	PER PLANE	NEXT ASSEMBLY	SUPERSEDES	SUP. BY	
E	5/16 WAS TO HD. OF SCREW	6-29-43	H.R.K.						
D	L-4A 1 PER SHIP WAS 2	4-22-43	M.G.S.						
C	L-4A NEXT ASSY. 70232 WAS 70562	4-22-43	M.G.S.						
B	L-4A, J3C-65 PER SHIP WAS 1	11-24-42	C.E.K.						
A	J3F-65, J3L-65 ADDED	10-2-42	H.R.K.						
LET.	REVISION	DATE	BY						

THIS DRAWING IS THE PROPERTY OF THE PIPER AIRCRAFT CORP. AND ITS POSSESSION BY UNAUTHORIZED PERSONS SHALL NOT BE CONSTRUED AS PERMISSION TO REPRODUCE FOR SALE, IN WHOLE OR IN PART. ANY DEVICES SHOWN THEREON.

PIPER AIRCRAFT CORP.
LOCK HAVEN, PENNA.

PART NO.	No. REQ.	SIZE	DESCRIPTION / MATERIAL
#6-32	1	3/4 LONG.	RD. HD. MACH. SCREW
-4	1	1/8 x NOTED	WELD ROD
-2			

SCALE FULL SIZE — TOTAL WT.—LBS.
FINISH—PIPER SPECIFICATION #10
MANUFACTURING PRACTICES—PIPER SPECIFICATION #9

ARM ASSEMBLY — CABIN HEATER & CARBURETOR AIR SCOOP CONTROL

F.B.	V.F.		
9-4-41	9-15-41		70251
DRAFTSMAN	CHECKER	STANDARDS	

F

349

A349

AH

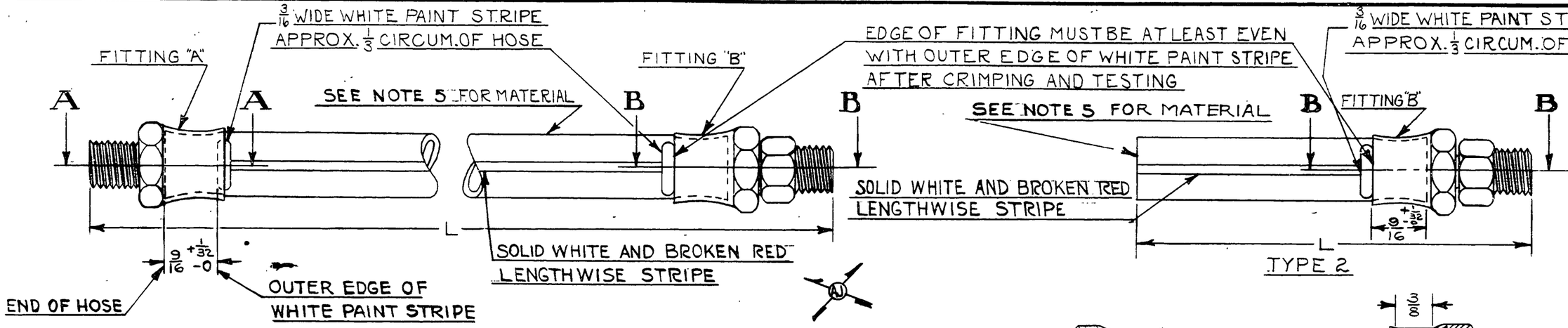

TYPE 1

TYPE 2

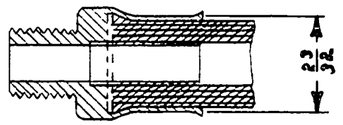

SECTION A-A

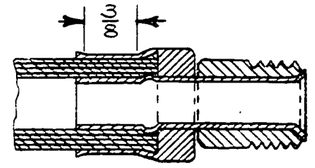

SECTION B-B

ASSY. NO.	LINE NO.	OLD PART	L	TYPE	FTG. "A"	FTG. "B"	MODEL	NEXT ASSY.
70322-2	70322-6	A7282	15	1	74301	74291	J3L-65	72353, 73006
70322-3	70322-7	A7302	18	1	74301	74291	J3C-65	70292
70322-4	70322-8		13 1/4	1	74301	74291		
70322-5	70322-9		14					
70322-10	70322-11	A7242	11 3/4	1	74301	74291	J3F-65	73186
70322-12	70322-13		15 1/2	1	74301	74291	J5C	75266
70322-14	70322-15	W/H82544	19 1/2	1	74301	74291	J3	FOR SERVICE ONLY
70322-16	70322-17	W/H82525A	6 1/16	1	74301	74291	J3	FOR SERVICE ONLY
70322-18	70322-19	W/H83220A	8 3/4	1	74301	74291	J3F-50	FOR SERVICE ONLY
70322-20	70322-21		12 3/8	2	——	74291	J5C	24186
70322-22	70322-23		22 1/2	1	74301	74291		
70322-24	70322-25		19 5/8	1	74301	74291		
70322-26	70322-27		16 3/4	1	74301	74291		
70322-28	70322-29		24 1/2	1	74301	74291		
70322-30	70322-31		12 1/4	1	74301	74291		
70322-32	70322-33		8 1/2	1	74301	74291		

NOTES:

1. FINISH USED FOR HOSE MARKINGS MUST BE GASOLINE AND OIL RESISTANT.
2. GRIND HOSE TO SIZE ON ENDS, IF TOO LARGE FOR FITTINGS.
3. GATES 36HB HOSE MATERIAL TO BE USED ONLY ON COMMERCIAL AIRCRAFT.
4. TEST FITTING ATTACHMENT WITH 100# TENSION.
5. MATERIAL — GATES 36HB VULCO OR AAF SPEC. 26577, AMEND. 3 OR AN-H-26.

LET.	REVISION	DATE	BY
AN	-32 ADDED	3-23-49	C.K.
AM	-30 ADDED	1-27-48	B.C.
AL	-28 ADDED	7-1-47	B.C.
AK	-22, -24, -26 ADDED	3-6-47	T.N.K.
AJ	NOTES REV. & NOTE 5 ADDED	10-29-46	B.C.
AH	HOSE MATL. TABLE REM.	10-29-46	B.C.
AG	REDRAWN & REVISED	8-19-46	I.D.B.

THIS DRAWING IS THE PROPERTY OF THE PIPER AIRCRAFT CORP. AND ITS POSSESSION BY UNAUTHORIZED PERSONS SHALL NOT BE CONSTRUED AS PERMISSION TO REPRODUCE FOR SALE, IN WHOLE OR IN PART. ANY DEVICES SHOWN THEREON.

MODEL	PER PLANE	NEXT ASSEMBLY	SUPERSEDES	SUP. BY
NOTED		NOTED		

PIPER AIRCRAFT CORP.
LOCK HAVEN, PENNA.

SEE TABLE	—	COUPLING ASSY-FUEL LINE SOLID
SEE TABLE	—	COUPLING ASSY- FUEL LINE SWIVEL
SEE TABLE	—	3/4 +1/16 O.D x 3/8 I.D LINE (SEE NOTE 5)
PART No.	No. REQ.	SIZE / DESCRIPTION / MATERIAL

SCALE FULL SIZE — TOTAL WT.—LBS.

FINISH—PIPER SPECIFICATION #10

MANUFACTURING PRACTICES—PIPER SPECIFICATION #9

LINE ASSEMBLIES - FLEXIBLE FUEL

DRAFTSMAN	CHECKER	STANDARDS
I.D.B. 8-19-46	R.D.M. 8-19-46	

70322

AH

660

A660

WAS 4280, 4286
D4344-A

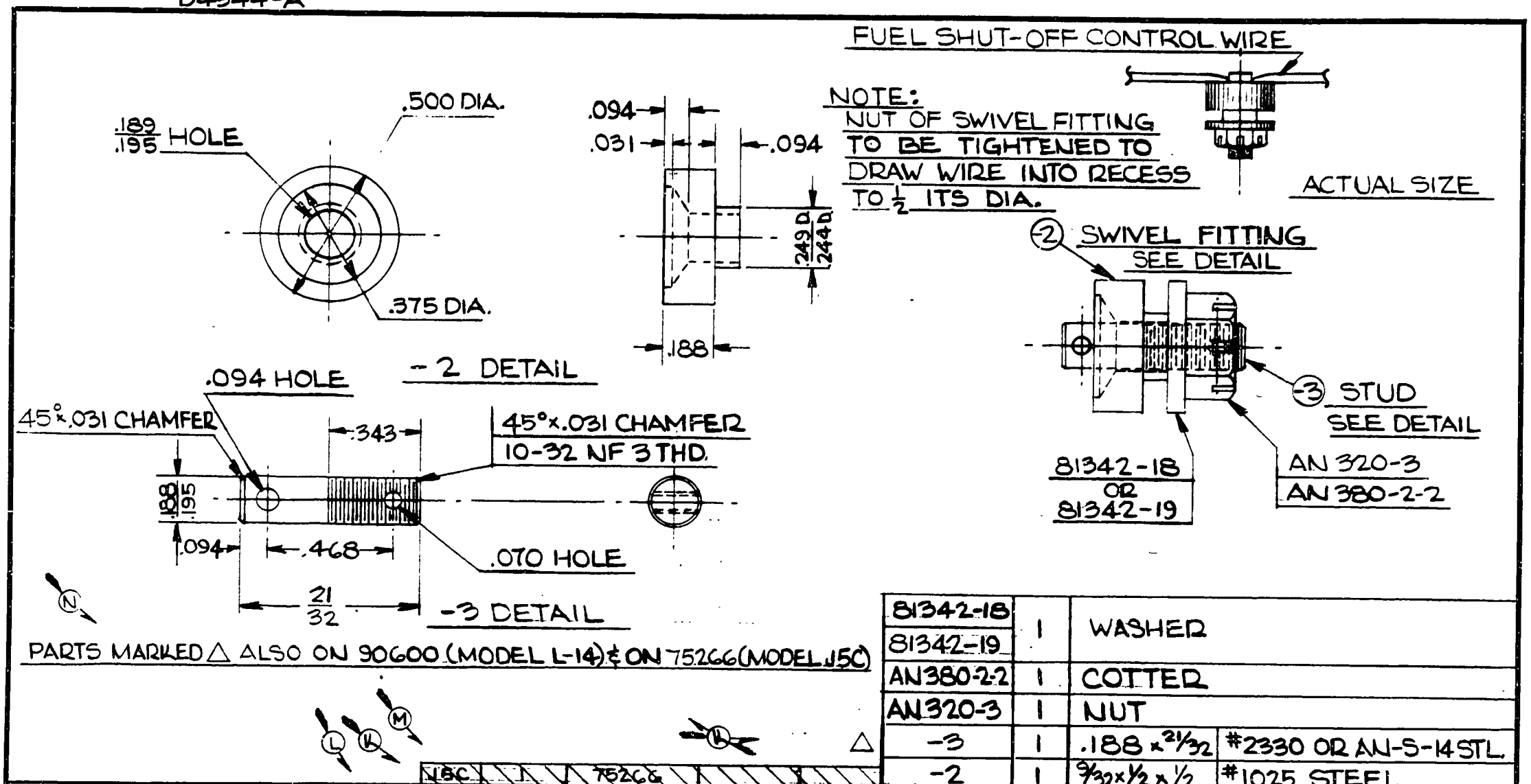

PARTS MARKED △ ALSO ON 90600 (MODEL L-14) & ON 75266 (MODEL J5C)

PART NO.	NO. REQ.	SIZE	DESCRIPTION
81342-18 / 81342-19	1	WASHER	
AN380-2-2	1	COTTER	
AN320-3	1	NUT	
-3	1	.188 x 21/32	#2330 OR AN-S-14 STL.
-2	1	9/32 x 1/2 x 1/2	#1025 STEEL

MATERIAL

SCALE TWICE SIZE & NOTED | TOTAL WT.—LBS.

FINISH—PIPER SPECIFICATION # 10

MANUFACTURING PRACTICES—PIPER SPECIFICATION # 9

MODEL	PER PLANE	NEXT ASSEMBLY	SUPERSEDES	SUP. BY
J5C	1	75266		
L-14	1	90600		
J5D	1	72033		
J3F-65	1	70792		
J3L-65	1	70792		
L-4A, L-4B	1	70792		
J5C, HE-1	1	72033		
J3C-65	1	70792	FIG 1 OF D7436B	

LET	REVISION	DATE	BY
P	REDRAWN WITHOUT CHANGE	6-6-51	M.G.
O	1 PER SHIP WAS 3 FOR J5C	4-9-46	CEK
N	N.A. NOTE REVISED	4-9-46	CEK
M	J5C MODEL REF. ADDED	1-22-46	I.M.M.
L	J5C MODEL REF. CAN.	11-16-45	E.L.N.
K	L-14 MODEL REF. ADDED.	7-5-45	E.L.N.
J	REDRAWN & REVISED	4-10-43	I.D.B.

THIS DRAWING IS THE PROPERTY OF THE PIPER AIRCRAFT CORP. AND ITS POSSESSION BY UNAUTHORIZED PERSONS SHALL NOT BE CONSTRUED AS PERMISSION TO REPRODUCE FOR SALE IN WHOLE OR IN PART ANY DEVICES SHOWN THEREON.

PIPER AIRCRAFT CORP.
LOCK HAVEN, PENNA.

FITTING ASSEMBLY— FUEL SHUT-OFF SWIVEL

DRAFTSMAN	CHECKER	STANDARDS
I. D. B. 4-10-43	R.C.M. 4-14-43	

70371

350

A350

WAS A7091, A7014, A7079
D7104-A

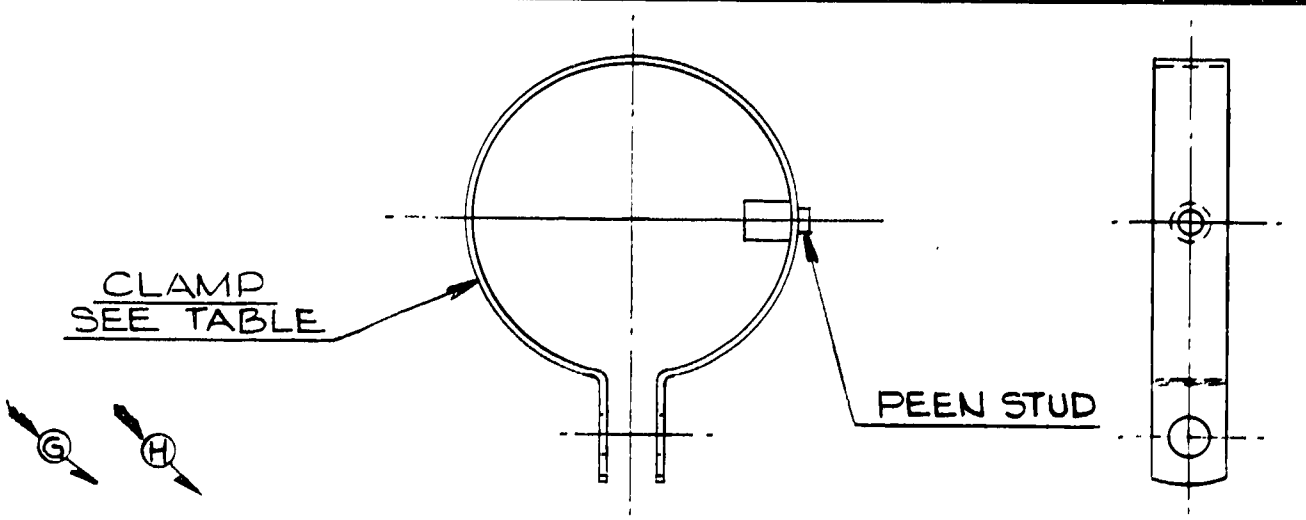

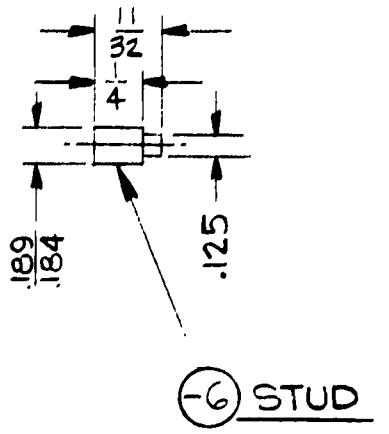

NOTE: CLAMP ASSY. TO BE METALIZED WITH ALUMINUM WHEN #1025 STEEL CLAMPS ARE USED.

ASSY. NO.	PART NO. OF CLAMP	MODEL	PER SHIP	NEXT ASSY.	
70591-2	80002-20	L-4A	2	75234	L
		J3C-65		74553	
		J3F-65		73126	
		L-4B		70893	
		J3L-65		73006	
		J5E	3	75266	L
70591-3	80002-18	J3L-65	4	73006	
70591-4	80002-19				
70591-5	THIS PART OBSOLETE SEE DWG. SAME NO. DATE 12-19-41				

PART MARKED THUS △ ALSO ON 72691

PART NO.	NO. REQ.	SIZE	DESCRIPTION / MATERIAL
80002-20	1		CLAMP
80002-19			
80002-18			
-6	1	3/16 DIA. x 11/32 L	C.R. STEEL

SCALE FULL SIZE | TOTAL WT.—LBS.

FINISH—PIPER SPECIFICATION # 10

MANUFACTURING PRACTICES—PIPER SPECIFICATION # 9

CLAMP ASSEMBLY—EXHAUST STACK

LET	REVISION	DATE	BY	MODEL	PER PLANE	NEXT ASSEMBLY	SUPERSEDES	SUP. BY
M	REDRAWN WITHOUT CHANGE	6-7-51	M.G.					
L	J5C MODEL REF. ADDED FOR -2	1-22-46	I.M.M.	NOTED	NOTED	NOTED	D7452-A	
K	L-4A N.A. 75234 WAS 74553 FOR -2	2-21-45	E.L.N.					
J	J3C N.A. 74563 REMOVED FOR -2	1-12-45	J.B.W.					
H	NOTE REVISED	12-13-44	I.D.B.					
G	NOTE REVISED	10-23-43	C.E.W.					
F	ON -2, J3C-65, L-4A N.A. WAS 70893	10-8-43	A.H.					
E	REDRAWN & REVISED	8-3-43	J.E.C.					

THIS DRAWING IS THE PROPERTY OF THE PIPER AIRCRAFT CORP. AND ITS POSSESSION BY UNAUTHORIZED PERSONS SHALL NOT BE CONSTRUED AS PERMISSION TO REPRODUCE FOR SALE IN WHOLE OR IN PART ANY DEVICES SHOWN THEREON.

PIPER AIRCRAFT CORP.
LOCK HAVEN, PENNA.

DRAFTSMAN	CHECKER	STANDARDS
CROWLEY 8-3-43	P.R.R. 8-5-43	

70591

J

351

A351

WAS 7449 / D7357-C

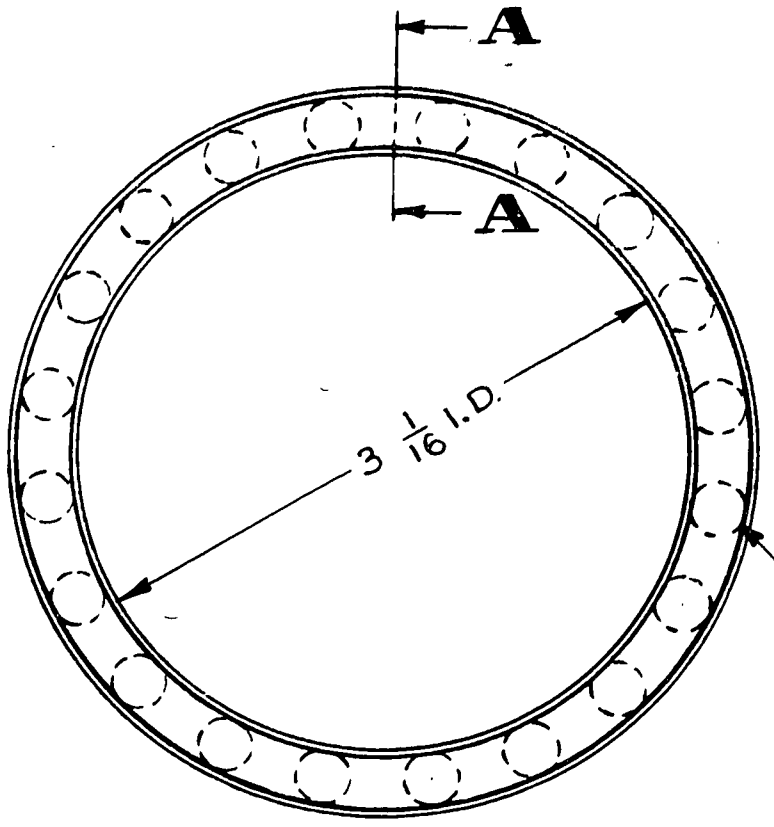

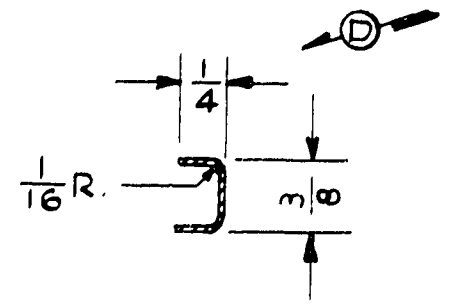

SECTION A-A

1/4 HOLE (-2 ONLY)
20 REQ. EQUALLY SPACED

70991 AS SHOWN
70991-2 WITH HOLES SHOWN DOTTED

MODEL	PER PLANE	NEXT ASSEMBLY	SUPERSEDES	SUP. BY
J3F-65	3	71053		
J3L-65	3	71053		
J4A-45	3	71053		
J3C-65	3	71053		

LET	REVISION	DATE	BY
F	REDRAWN WITHOUT CHANGE	6-8-51	I.M.M.
E	-2 ADDED	2-11-48	H.R.K.
D	1/4 WAS 3/8; VIEW REVISED	12-12-44	E.L.N.
C	REDRAWN & REVISED	6-19-43	I.D.B.

THIS DRAWING IS THE PROPERTY OF THE PIPER AIRCRAFT CORP. AND ITS POSSESSION BY UNAUTHORIZED PERSONS SHALL NOT BE CONSTRUED AS PERMISSION TO REPRODUCE FOR SALE IN WHOLE OR IN PART ANY DEVICES SHOWN THEREON.

PIPER AIRCRAFT CORP.
LOCK HAVEN, PENNA.

PART NO.	NO. REQ.	SIZE	DESCRIPTION / MATERIAL
		.020×4 7/16×4 7/16	TYPE 347 STAINLESS ST'L ANNEALED, 2D FINISH

SCALE FULL SIZE — TOTAL WT.—LBS.
FINISH—PIPER SPECIFICATION # 10
MANUFACTURING PRACTICES—PIPER SPECIFICATION # 9

SPACER — MUFFLER SHROUD

DRAFTSMAN	CHECKER	STANDARDS	
I. BARNARD 6-19-43	C.K. 7-15-43		70991

352

A352

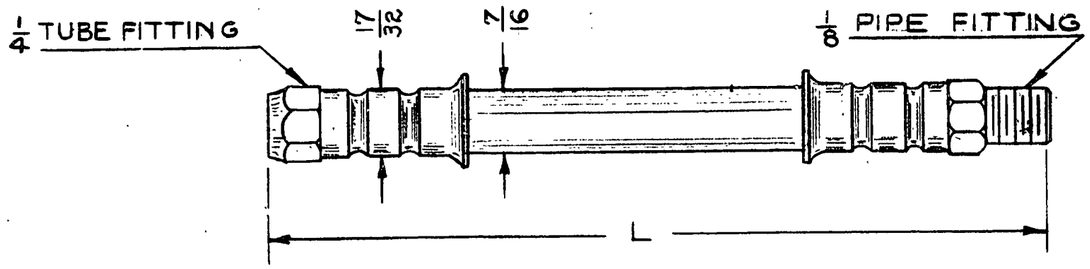

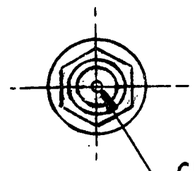

CLOSE END & DRILL .040 HOLE IN 71061 ONLY

3/16 I.D. RESISTOFLEX HOSE ASSY.
PVA TYPE 4SNA REWORKED AS SHOWN

PART NO.	L	MODEL	PER SHIP	NEXT ASSEMBLY	REMARKS
71061	6	J3C-65	1	78883	CLOSE 1/8 PIPE FITTING AND DRILL .040 HOLE
		J3F-65	1	73186	
		J3L-65	1	73006	
		J5C	1	75266	
71061-2	6				
71061-3	11	J5C	2	42625	AS PURCHASED
71061-4	14 1/4	J3	2	42573	
		J5C	2	42625	



"This drawing is the property of the Piper Aircraft Corp. and its possession by unauthorized persons shall not be construed as permission to reproduce for sale, in whole or in part, any devices shown thereon."

LET.	REVISION	DATE	BY
Z	NOTES REVISED	4-24-47	J.H.
Y	REM. "AS PURCHASED" -2&-4	4-24-47	J.H.
X	J5C MODEL REF. CAN. FOR-3	5-6-46	CEK
W	J5C MODEL REF. ADDED FOR-4	5-6-46	CEK
V	REDRAWN & REVISED	11-23-45	DB

MODEL	PER PLANE	NEXT ASSEMBLY	SUPERSEDES	SUP. BY
NOTED	NOTED	NOTED		

PIPER AIRCRAFT CORP.
LOCK HAVEN, PENNA.

PART NO.	NO. REQ.	MATERIAL
		NOTED

SCALE — TOTAL WT.—LBS.

FINISH—PIPER SPECIFICATION #10

MANUFACTURING PRACTICES—PIPER SPECIFICATION #9

HOSE ASSEMBLY-
RESISTOFLEX FLEXIBLE

DRAFTSMAN	CHECKER	STANDARDS
D.B. 11-23-45	E.E.T. 11-25-45	

71061

661

A661

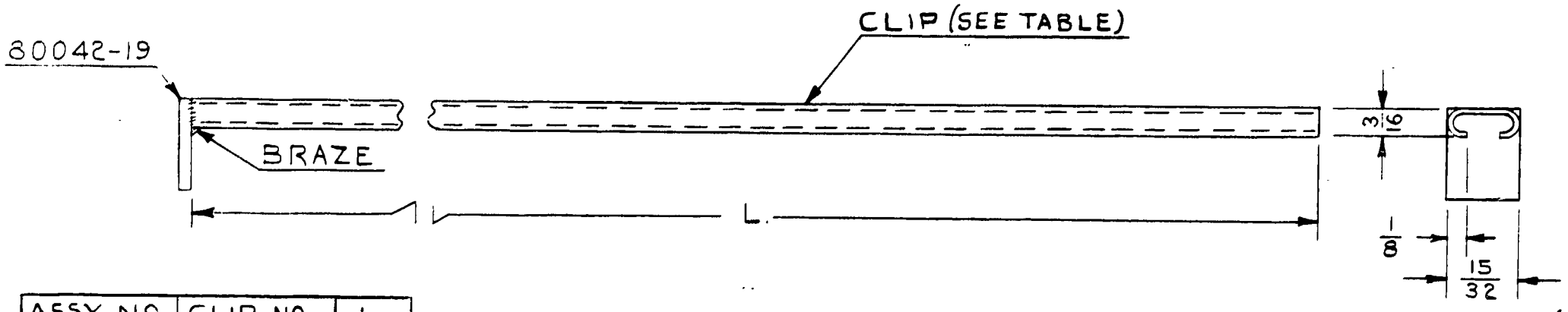

ASSY. NO.	CLIP NO.	L
71261	71261-2	14 3/4
71261-3	71261-4	13 1/2
71261-5	71261-6	19 1/4

LET	REVISION	DATE	BY
L	REDRAWN WITHOUT CHANGE	6-8-51	I.M.M.
K	-5 & -6 ADDED	6-16-49	C.K.
J	-3 & -4 ADDED	2-12-48	R.C.
H	J3L-65 NEXT ASSY. WAS 74414	18-44	L.R.
G	J3F, J3C, L-4A, L-4B, N.A. WAS 70893	1-8-44	L.R.
F	J3F, J3C, L-4A, L-4B N.A. WAS 70963	10-7-43	A.H.
E	J3L-65 NEXT ASSY. WAS 74403	10-7-43	A.H.
D	J3L NEXT ASSY. 74403 WAS 71963	9-20-43	J.E.C.
C	SPEC. REVISED TO INCLUDE 84471	6-23-43	H.J.G.
B	ALTERNATE MAT'L. ADDED TO -2	2-19-43	R.R.F.
A	J3F-65, J3L-65 ADDED	10-3-42	H.R.K.

MODEL	PER PLANE	NEXT ASSEMBLY	SUPERSEDES	SUP. BY
J3L-65	1	74403		
J3F-65	1	70893		
L-4B	1	70963		
L-4A	1	70963		
J3C65	1	70963		

THIS DRAWING IS THE PROPERTY OF THE PIPER AIRCRAFT CORP. AND ITS POSSESSION BY UNAUTHORIZED PERSONS SHALL NOT BE CONSTRUED AS PERMISSION TO REPRODUCE FOR SALE IN WHOLE OR IN PART ANY DEVICES SHOWN THEREON.

PIPER AIRCRAFT CORP.
LOCK HAVEN, PENNA.

PART NO.	NO. REQ.	SIZE	DESCRIPTION / MATERIAL
84471	DWG. REF. ONLY		CHANNEL SECTION
80042-19	1		PLATE
-6	1	SEE TABLE	PIPER SECT. 84471
-4			
-2			

SCALE FULL SIZE | TOTAL WT.—LBS.
FINISH—PIPER SPECIFICATION # 10
MANUFACTURING PRACTICES—PIPER SPECIFICATION # 9

CLIP ASSEMBLY— SHROUD SLIDE

DRAFTSMAN	CHECKER	STANDARDS
C.E.V. 2-13-42	H.R.K. 4-14-42	

71261

353

A353

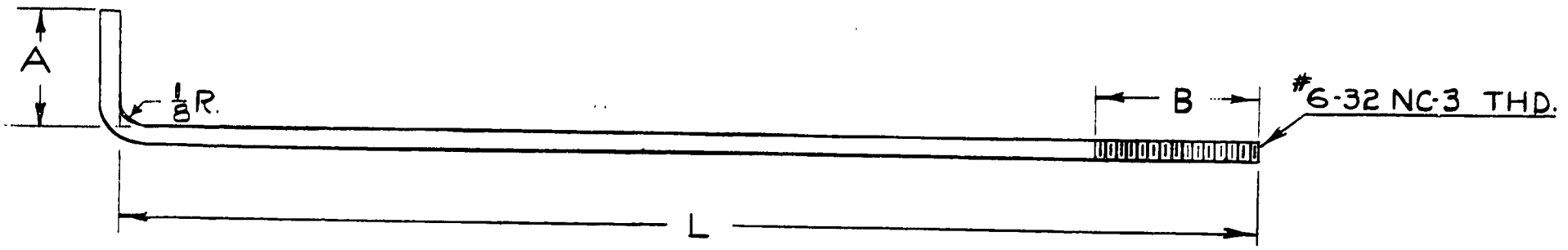

PART NO.	L	A	B	REMARKS
71451 - 2	11 1/2	3/4	1	
71451 - 3	5 1/2	3/4	1 1/2	
71451 - 4	3 3/4	3/4	1	
71451 - 5	3	3/4	1 1/2	
71451 - 6	3 1/16	3/4	1	WAS 6-5035
71451 - 7	7 5/16	1 3/16	1	WAS 6-5032
71451 - 8	6 3/4	1 1/8	1	
71451 - 9	6	3/4	1 1/2	
71451 - 10	3 1/2	3/4	1 1/2	

B

CODE NO.			1/8 DIA. x NOTED	#1010 C.F. STEEL
	PART No.	No. REQ.	SIZE	DESCRIPTION
			MATERIAL	

SCALE FULL SIZE — TOTAL WT.—LBS.

FINISH—PIPER SPECIFICATION #10

MANUFACTURING PRACTICES—PIPER SPECIFICATION #9

THIS DRAWING IS THE PROPERTY OF THE PIPER AIRCRAFT CORP. AND ITS POSSESSION BY UNAUTHORIZED PERSONS SHALL NOT BE CONSTRUED AS PERMISSION TO REPRODUCE FOR SALE, IN WHOLE OR IN PART, ANY DEVICES SHOWN THEREON.

LET.	REVISION	DATE	BY
C	-9 & -10 ADDED	12-15-49	K.D.
N	B COL. ADDED; B FOR -3 & -5, 1 1/2 WAS 1; L FOR -3, 5 1/2 WAS 5; L FOR -5, 3 WAS 2 1/2	6-6-49	C.K.
M	-8 ADDED	7-23-48	J.C.B.
L	REDRAWN & REVISED	2-12-47	I.D.B.

MODEL	PER PLANE	NEXT ASSEMBLY	SUPERSEDES	SUP. BY

PIPER AIRCRAFT CORP.
LOCK HAVEN, PENNA.

ROD — ENGINE
BAFFLE TIE

DRAFTSMAN	CHECKER	STANDARDS
I.D.B. 2-12-47	J.E.H. 2-13-47	

71451

PENCILTEX A. & D. SMITH CO., PGH., PA.

354

A354

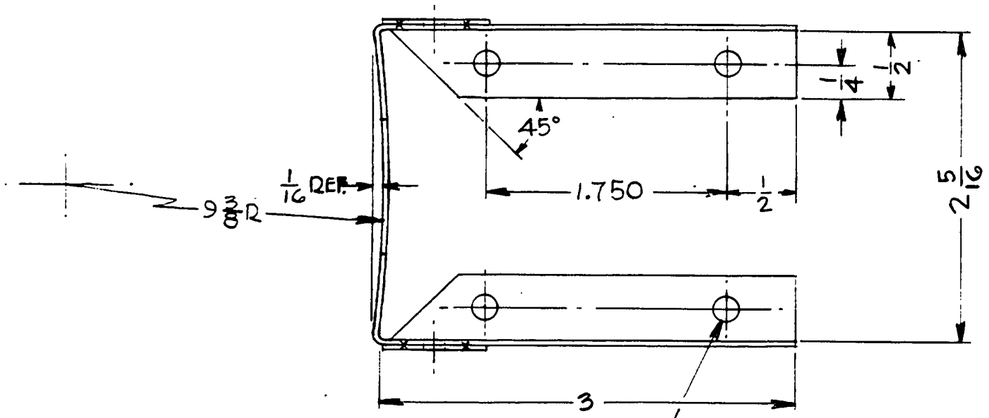

NOTE: 1. ALL BEND RADII 1/32.
2. HOLES WHERE "SEE NOTE 2" IS INDICATED SHALL COINCIDE WITH RELATED HOLES IN FIREWALL.

.191 HOLE
4 REQ. (SEE NOTE 2)

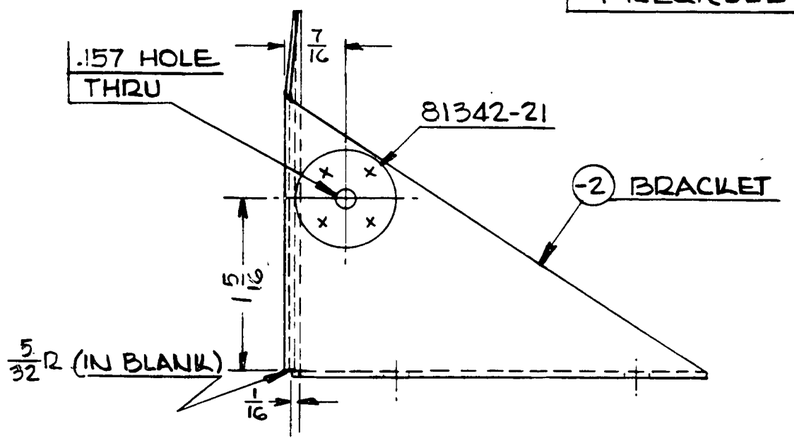

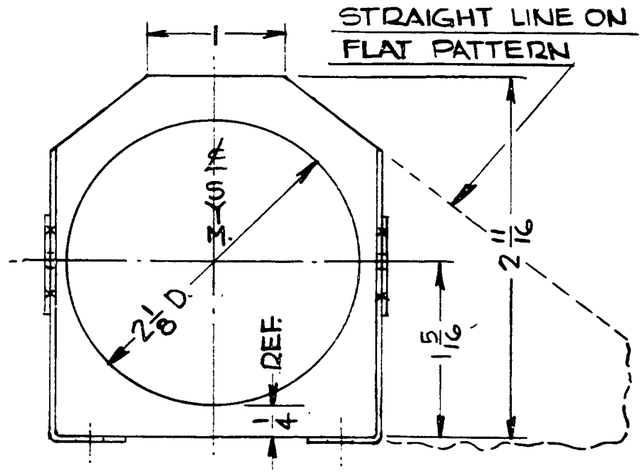

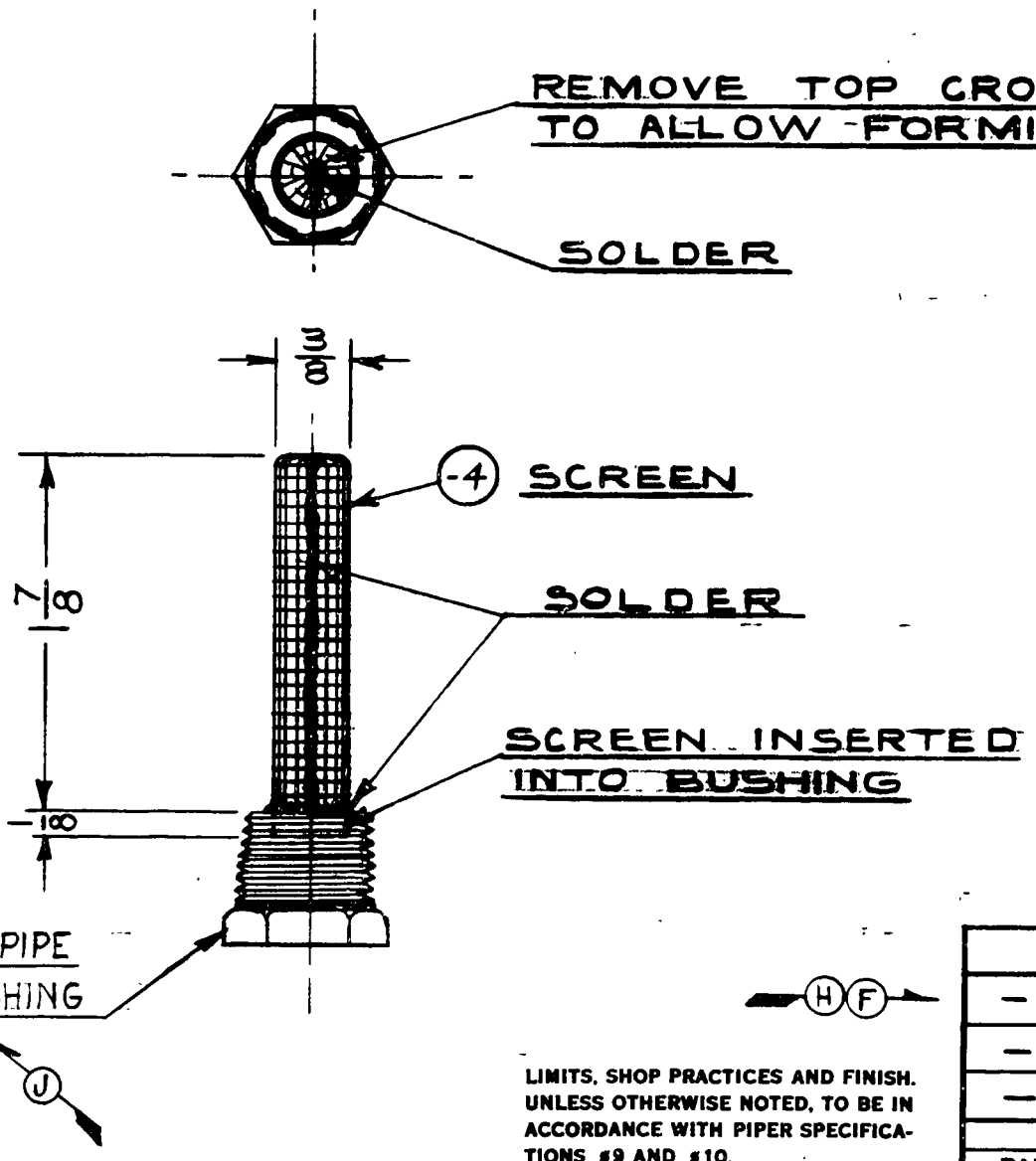

LIMITS, SHOP PRACTICES AND FINISH. UNLESS OTHERWISE NOTED, TO BE IN ACCORDANCE WITH PIPER SPECIFICATIONS #9 AND #10.

PART No.	No. REQ.	SIZE	DESCRIPTION / MATERIAL
	1		W/H *3226x4 PIPE REDUCER BUSHING
-4	1	1 3/8 x 2 5/16	#10 MESH .025 COPPER WIRE
-3	—		THIS PART NO. OBSOLETE. SEE DWG. SAME NO. DATED 3-25-[illegible]
-2	—		THIS PART NO. OBSOLETE. SEE DWG. SAME NO. DATED 3-25-[illegible]

SCALE FULL SIZE — TOTAL WT.-LBS.

FINISH

STRAINER ASSEMBLY - HEADER TANK FINGER

LET	REVISION	DATE	BY
J	W/H *3226x4 WAS 84382	6-18-51	H.R.K.
H	ON -4, #10 MESH .025 COPPER WIRE WAS #14 MESH ON 3 (29 GA B&S) COPPER OR BRONZE WIRE	3-10-47	C.E.K.
G	J5C MODEL REF. CANCELED	11-16-45	E.L.N.
F	BRONZE ADDED AS ALTERNATE FOR -4	4-5-45	H.M.Z.
E	J3C N.A. 72813 REMOVED	1-12-44	E.L.N.
D	REDRAWN & REVISED	4-28-44	I.D.B.

MODEL	PER SHIP	NEXT ASSEMBLY	SUPERSEDES	SUP. BY
~~J3A~~	1	72413		
~~J3F-65~~	1	73126		
~~J3C-65~~	1	73006		
~~J3C-65~~	1	72813		
~~J5C~~	1	72033		

PIPER AIRCRAFT CORP.
LOCK HAVEN, PENNA.

DRAWN	CHECKED	APPROVED
I. BARNARD 4-28-44	R.E.T. 5-2-44	

72091

E

355

A355

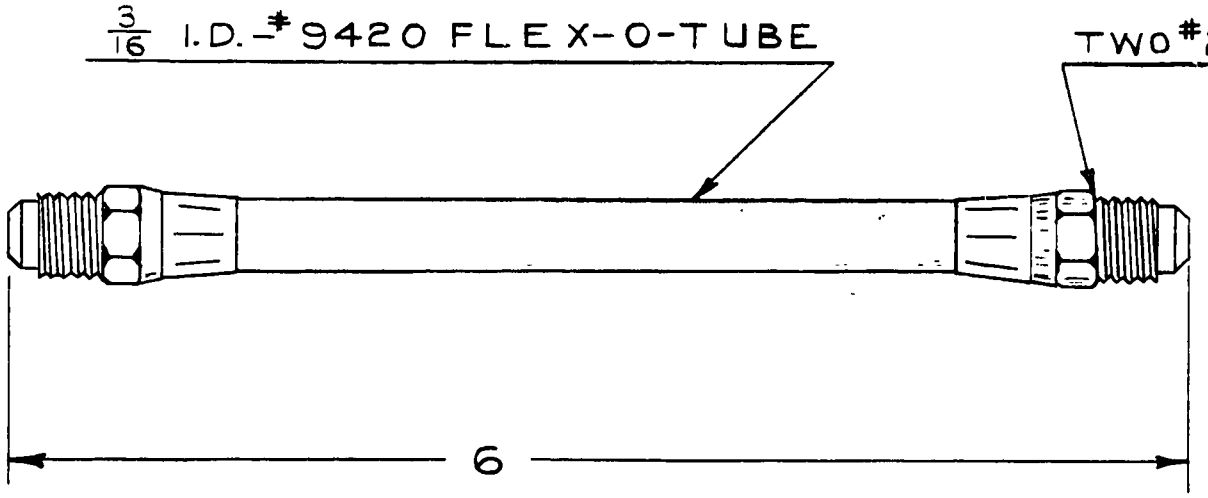

NOTE:
HOSE ASSY. PURCHASED FROM
FLEX-O-TUBE CORP.

(E) (D) (C) (B) (A)

LET	REVISION	DATE	BY
F	REDRAWN WITHOUT CHANGE	6-8-51	I.M.M.
E	J5C MODEL REF. REINSTATED	12-17-45	H.R.K.
D	J5C MODEL REF. CANC.	11-15-45	I.M.M.
C	L-14 MODEL REF. ADDED	8-7-45	L.R.
B	J5C NEXT ASSY. 14105 WAS 14103	8-10-44	H.D.B.
A	J5C NEXT ASSY. 14103 WAS 71935 & 72275	1-21-44	R.E.T.

MODEL	PER PLANE	NEXT ASSEMBLY	SUPERSEDES	SUP. BY
L-14	2	90608		
J5C	2	10185	71061-2	
HE-1	1	71935		
J5D	2 OR 1	72275 OR 71935		

THIS DRAWING IS THE PROPERTY OF THE PIPER AIRCRAFT CORP. AND ITS POSSESSION BY UNAUTHORIZED PERSONS SHALL NOT BE CONSTRUED AS PERMISSION TO REPRODUCE FOR SALE IN WHOLE OR IN PART ANY DEVICES SHOWN THEREON.

PIPER AIRCRAFT CORP.
LOCK HAVEN, PENNA.

PART NO.	NO. REQ.	MATERIAL
		NOTED

SCALE FULL SIZE | TOTAL WT.—LBS.
FINISH—PIPER SPECIFICATION # 10
MANUFACTURING PRACTICES—PIPER SPECIFICATION # 9

HOSE ASS'Y—VENT LINE FLEXIBLE

DRAFTSMAN	CHECKER	STANDARDS
3-25-42 W.E.S.	McRAE 5-20-42	

72101

356

A356

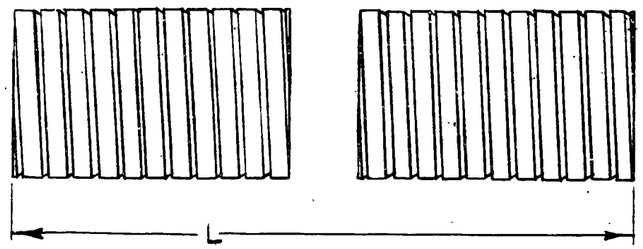

PART NO.	L	MODEL	PER SHIP	NEXT ASSEMBLY
72381-2	20	L-4A	1	75234
		J3C-65	1	74553
		J3F-65	1	73126
		J3L-65	1	73006
72381-3	21	L-4A	1	75234
		J3C-65	1	74553
		J3F-65	1	73126
		J5C	1	75266
		J3L-65	1	73006
72381-4	6	L-4A	1	75234
		J3C-65	1	74433
		J3F-65	1	73126
		J5C	1	75266
		J3L-65	1	73006
72381-5	10	J3F-65	1	73126
		J3L-65	1	73006
72381-6	10½			

PART NO.	L	MODEL	PER SHIP	NEXT ASSEMBLY
72381-7	16½			
72381-8	27			
72381-9	7½	J5C	1	75266
		J3C-65	1	74553
		L-44	1	75234
72381-10	21			
		J5C	1	75266
72381-11	15			
		J5C	1	75266
72381-12	40			
72381-13	5½	J5C	1	75266
72381-14	2¾	J5C	1	75266
72381-15	31	J5C	1	75266
72381-16	18	J5C	1	75266
72381-17	14	J5C	1	75266
72381-18	28			
72381-19	12¾			
72381-20	8¼			
72381-21	11½			
72381-22	34½			

NOTE:
TUBE FULLY COMPRESSED WILL BE 1½ IN. PER FOOT SHORTER THAN "L".
TUBE FULLY EXTENDED WILL BE 1½ IN. PER FOOT LONGER THAN "L".

LET.	REVISION	DATE	BY
AH	-22 ADDED	2-13-51	I.M.M.
AG	-21 & NOTE ADDED	4-12-49	R.C.
AF	-20 ADDED	5-5-48	R.C.
AE	-19 ADDED	10-21-47	R.C.
AD	21 WAS 23 FOR-10; 31 WAS 33 FOR-15	2-25-47	C.E.K.
AC	-18 ADDED	1-17-47	I.M.M.
AB	J5C MODEL REF. ADDED FOR -9	5-13-46	L.R.
AA	J5C MODEL REF. REINSTATED FOR -10	5-13-46	L.R.
Z	J5C MODEL REF. CANC. FOR -3 & -4	5-13-46	L.R.
Y	"L" FOR -17 14 WAS 12	5-13-46	L.R.
X	J3C-65 N.A. 74433 WAS 74553 FOR -4	4-29-46	C.E.K.
W	-15, -16, -17 ADDED	1-11-46	I.D.B.
V	J5C MODEL REF. CANCELED FOR -15, -16, -17	1-11-46	I.D.B.
U	J5C MODEL REF. ADDED FOR -3 & -4	1-11-46	I.D.B.
T	REDRAWN & REVISED	2-21-45	E.L.N.

LIMITS, SHOP PRACTICES AND FINISH. UNLESS OTHERWISE NOTED, TO BE IN ACCORDANCE WITH PIPER SPECIFICATIONS #9 AND #10.

MODEL	PER SHIP	NEXT ASSEMBLY	SUPERSEDES	SUP. BY
NOTED	NOTED	NOTED		

PIPER AIRCRAFT CORP.
LOCK HAVEN, PENNA.

PART No.	NO. REQ.	NOTED	ALUMINUM
		SIZE	DESCRIPTION
			MATERIAL

SCALE 6 IN. = 1 FT. | TOTAL WT. - LBS.
FINISH

TUBES - 2⅛ O.D. FLEXIBLE

E.L.N.	R.E. TITUS		72381
2-21-45	2-22-45		
DRAWN	CHECKED	APPROVED	

663

A663

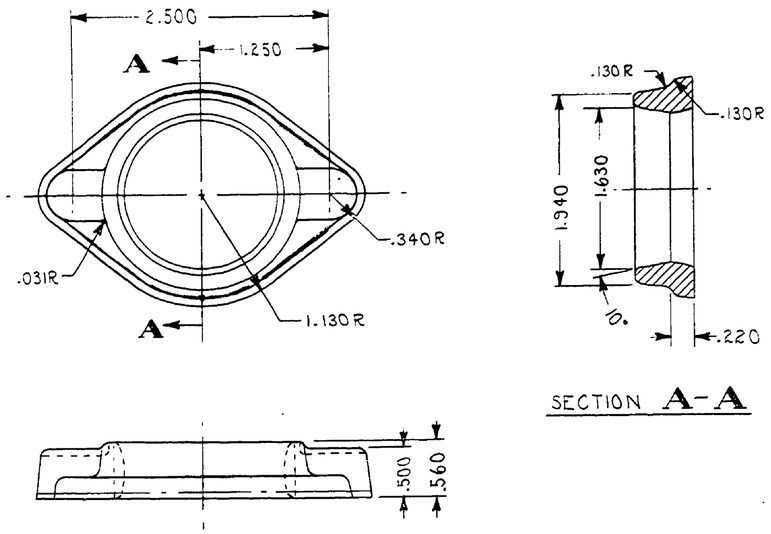

SECTION A-A

FORGING DETAIL

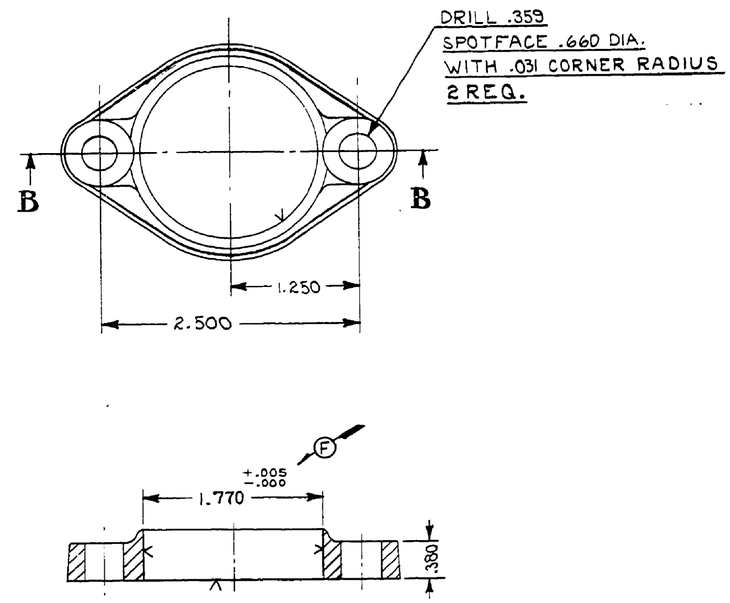

SECTION B-B

FINISHED PART

NOTES:
1. ON FORGING DIMENSIONS ALLOWABLE VARIATION PLUS .06 MINUS .00 UNLESS OTHERWISE SPECIFIED.
2. ALL FILLETS AND CORNER RADII .060 AND ALL DRAFT ANGLES 7° UNLESS OTHERWISE NOTED.
3. PART ANNEALED AFTER FORGING.

NOTE:
1. ON FINISHED PART ALL HOLES & SHARP CORNERS TO BE BURRED .005 TO .015 UNLESS OTHERWISE SPECIFIED.

LET.	REVISION	DATE	BY
G	45°±5° 1.940 & .500 REMOVED	6-6-50	C.K.
F	1.770 +.005 -.000 WAS 1.750 ±.005	1-27-47	L.M.M.
E	REDRAWN & REVISED	5-21-46	HMZ

THIS DRAWING IS THE PROPERTY OF THE PIPER AIRCRAFT CORP. AND ITS POSSESSION BY UNAUTHORIZED PERSONS SHALL NOT BE CONSTRUED AS PERMISSION TO REPRODUCE FOR SALE, IN WHOLE OR IN PART, ANY DEVICES SHOWN THEREON

MODEL	PER PLANE	NEXT ASSEMBLY	SUPERSEDES	SUP. BY
J5C	4	10427, 10428		

PIPER AIRCRAFT CORP.
LOCK HAVEN, PENNA.

PART No.	No. REQ.	SIZE	DESCRIPTION
		NOTED	347 STAINLESS STEEL

MATERIAL

SCALE FULL SIZE — TOTAL WT.—LBS.

FINISH—PIPER SPECIFICATION #10

MANUFACTURING PRACTICES—PIPER SPECIFICATION #9

FLANGE-EXHAUST

DRAFTSMAN	CHECKER	STANDARDS
HMZ 5-21-46	R.E.T. 6-3-46	

73811

815

A815

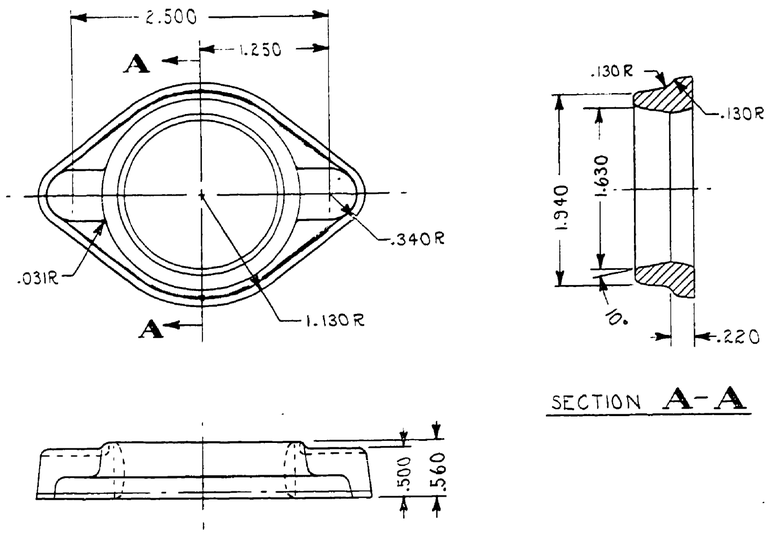

SECTION A-A

FORGING DETAIL

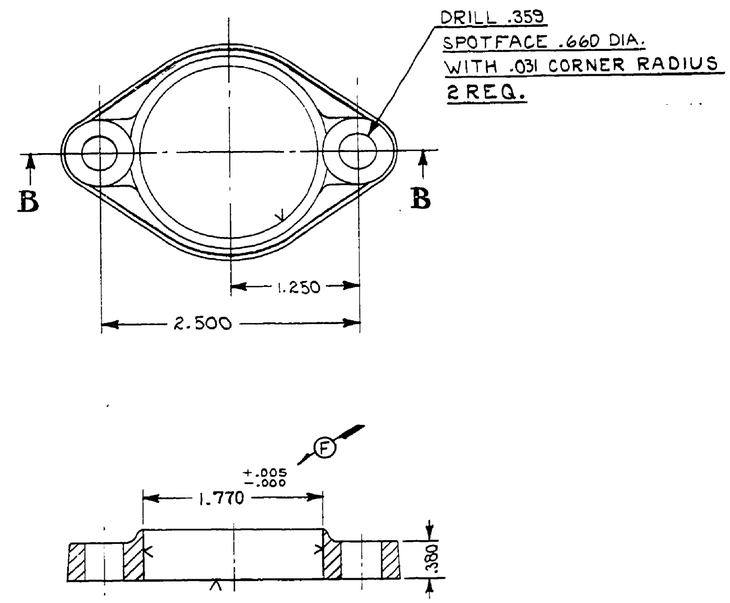

SECTION B-B

FINISHED PART

NOTES:
1. ON FORGING DIMENSIONS ALLOWABLE VARIATION PLUS .06 MINUS .00 UNLESS OTHERWISE SPECIFIED.
2. ALL FILLETS AND CORNER RADII .060 AND ALL DRAFT ANGLES 7° UNLESS OTHERWISE NOTED.
3. PART ANNEALED AFTER FORGING.

NOTE:
1. ON FINISHED PART ALL HOLES & SHARP CORNERS TO BE BURRED .005 TO .015 UNLESS OTHERWISE SPECIFIED.

LET.	REVISION	DATE	BY
G	45°±5° 1.940 & .500 REMOVED	6-6-50	C.K.
F	1.770 +.005 -.000 WAS 1.750 ±.005	1-27-47	L.M.M.
E	REDRAWN & REVISED	5-21-46	HMZ

THIS DRAWING IS THE PROPERTY OF THE PIPER AIRCRAFT CORP. AND ITS POSSESSION BY UNAUTHORIZED PERSONS SHALL NOT BE CONSTRUED AS PERMISSION TO REPRODUCE FOR SALE, IN WHOLE OR IN PART, ANY DEVICES SHOWN THEREON

MODEL	PER PLANE	NEXT ASSEMBLY	SUPERSEDES	SUP. BY
J5C	4	10427, 10428		

PIPER AIRCRAFT CORP.
LOCK HAVEN, PENNA.

PART No.	No. REQ.	SIZE	DESCRIPTION
		NOTED	347 STAINLESS STEEL

MATERIAL

SCALE FULL SIZE — TOTAL WT.—LBS.

FINISH—PIPER SPECIFICATION #10

MANUFACTURING PRACTICES—PIPER SPECIFICATION #9

FLANGE-EXHAUST

DRAFTSMAN	CHECKER	STANDARDS
HMZ 5-21-46	R.E.T. 6-3-46	

73811

815

A815

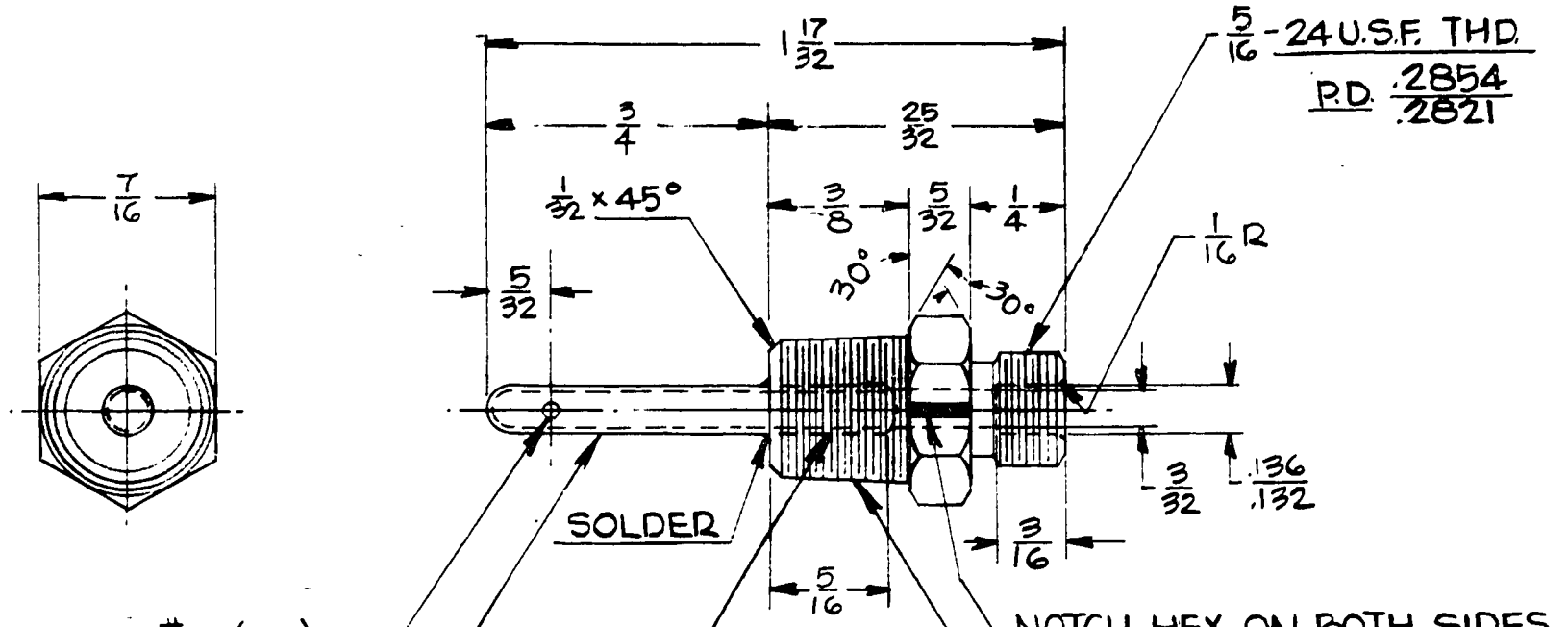

NOTES:

1. PRIMER JET (STRAIGHT) #2680
   PURCH. COMMONWEALTH BRASS CORP.
2. THIS DWG. COPIED FROM MFGR. DWG. #2680

NOTED

PART NO.	NO. REQ.	MATERIAL

SCALE TWICE SIZE | TOTAL WT.—LBS.

FINISH—PIPER SPECIFICATION # 10

MANUFACTURING PRACTICES—PIPER SPECIFICATION # 9

MODEL	PER PLANE	NEXT ASSEMBLY	SUPERSEDES	SUP. BY
J5C	2	75266		
HE-1	2	71222		

THIS DRAWING IS THE PROPERTY OF THE PIPER AIRCRAFT CORP. AND ITS POSSESSION BY UNAUTHORIZED PERSONS SHALL NOT BE CONSTRUED AS PERMISSION TO REPRODUCE FOR SALE IN WHOLE OR IN PART ANY DEVICES SHOWN THEREON.

LET	REVISION	DATE	BY
D	REDRAWN WITHOUT CHANGE	6-8-51	M.G.
A	J5C N.A. 75266 WAS 71222	11-15-45	I.M.M.

PIPER AIRCRAFT CORP.
LOCK HAVEN, PENNA.

DRAFTSMAN	CHECKER	STANDARDS
C.K. 2-19-43	M.G.S. 1-26-44	

JET- PRIMER (STRAIGHT)

74081

A358

THIS DRAWING TRACED FROM MFR'S. DWG. NO. GA-1007

END FITTING PURCH. FROM
EATON MANUFACTURING CO.
CLEVELAND, OHIO
PART NO. GA-1007

OPENING TO BE CONCENTRIC WITH OUTSIDE DIA. TOP MUST BE FLAT WITHIN .010 & CAMS FREE FROM BURRS TO PROVIDE FREE ROTATION AND SATISFACTORY SEAL OF CAP.

MUST BE FREE FROM BURRS & DRAW SCRATCHES.

UNLESS OTHERWISE SHOWN TOLERANCE TO BE ±.010

FINISH - CADMIUM PLATED

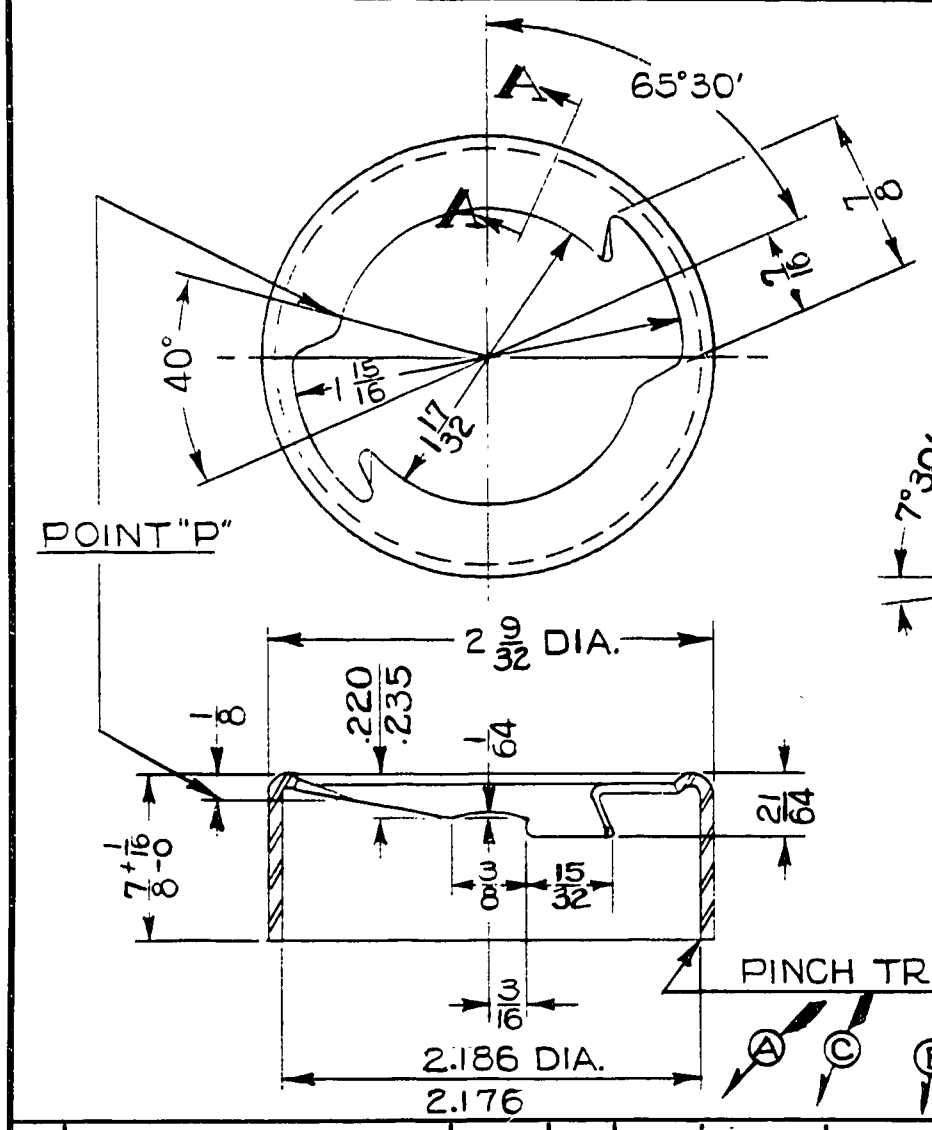

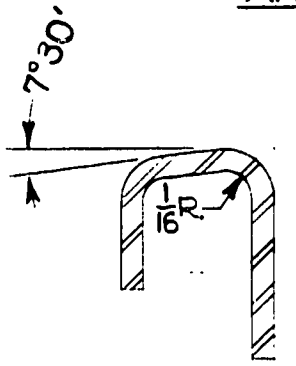

SECTION A-A
TWICE SIZE

Ⓔ

ORDNANCE B 246001

PART NO.	NO. REQ.	SIZE	DESCRIPTION / MATERIAL
		.050 ±.004	C.R. STEEL COIL

SCALE FULL SIZE & NOTED | TOTAL WT.—LBS.
FINISH—PIPER SPECIFICATION # 10
MANUFACTURING PRACTICES—PIPER SPECIFICATION # 9

MODEL	PER PLANE	NEXT ASSEMBLY	SUPERSEDES	SUP. BY
L-14	2	91067		
J5D	1 OR 2	70131		
L-14A-B	1	70131		
J5C	2	10377		
J5HE1	1	70131		
J4,13	1	70131		

LET	REVISION	DATE	BY
F	REDRAWN WITHOUT CHANGE	6-15-51	L.E.M.
E	FINISH NOTE ADDED	3-7-47	H.M.Z.
D	J5C N.A. 10377 WAS 91067	12-14-45	H.R.K.
C	J5C PER SHIP WAS 1 OR 2	11-2-45	L.E.K.
B	J5C N.A. 91067 WAS 70131	11-2-45	L.E.K.
A	L-14 MODEL REF. ADDED	7-5-45	I.M.M.

THIS DRAWING IS THE PROPERTY OF THE PIPER AIRCRAFT CORP. AND ITS POSSESSION BY UNAUTHORIZED PERSONS SHALL NOT BE CONSTRUED AS PERMISSION TO REPRODUCE FOR SALE IN WHOLE OR IN PART ANY DEVICES SHOWN THEREON.

PIPER AIRCRAFT CORP.
LOCK HAVEN, PENNA.

FLANGE - FUEL TANK FILLER CAP (PURCHASED)

DRAFTSMAN	CHECKER	STANDARDS
C.K. 3-18-43	L.E.K. 7-15-43	

74181

359

A359

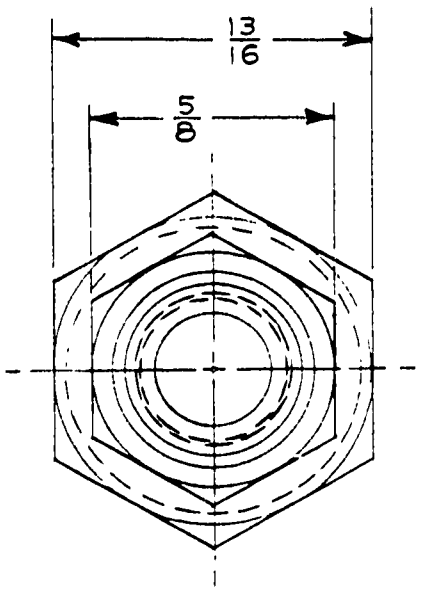

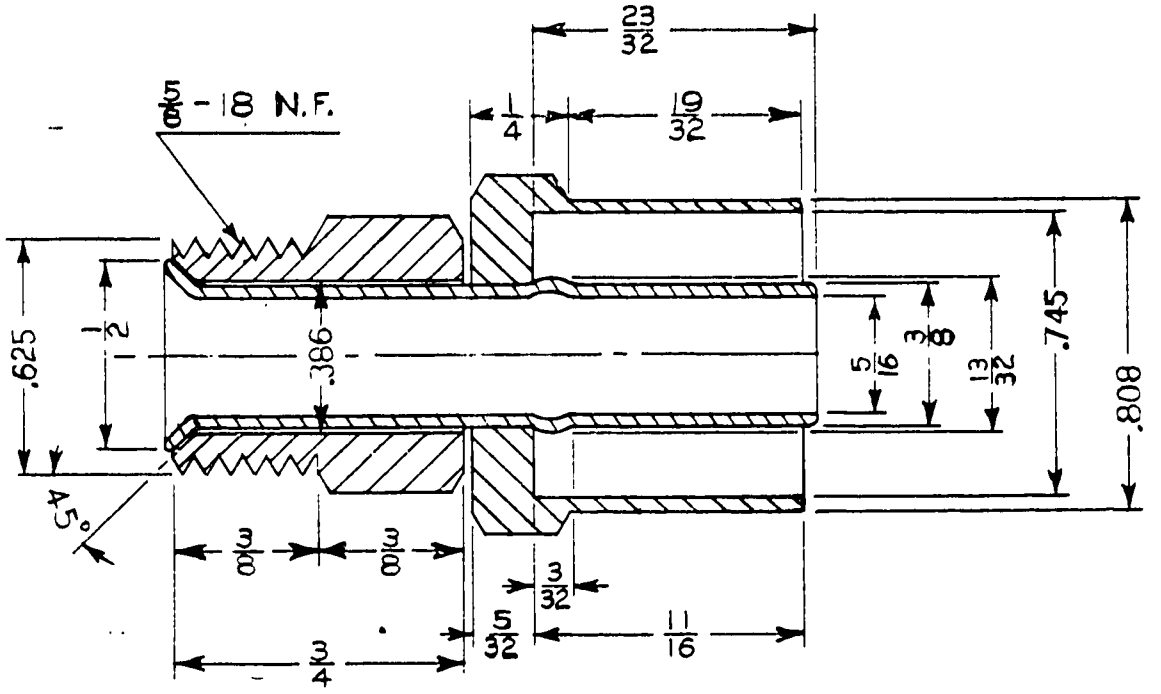

NOTE:
INFORMATION TAKEN FROM MFGRS. DRAWINGS #10-3040, #10-2640, #10-2740 & #10-2840

GAS HOSE SWIVEL COUPLING #1231-U-M-S PURCH. GATES RUBBER CO., DENVER, COLORADO

	MODEL	PER SHIP	NEXT ASSEMBLY	SUPERSEDES	SUPERSEDED BY
A	J5C	3	70322		
B	L-14	2	9287, 9228		
C	J5DHF-1	2	70322		
	J3F-65	1	70322		
	J3L-65	1	70322		
	J3C-65	1	70322		
	L-4A, L-4B	1	70322		

LET.	REVISION	DATE	SR.	BY
C	J5C PER SHIP 3 WAS 1	8-15-46		H M Z
B	J5C PER SHIP 1 WAS 2	11-15-45		I.M.M.
A	L-14 MODEL REF. ADDED	7-5-45		H M Z

PIPER AIRCRAFT CORP.
LOCK HAVEN, PENNA.

PART No.	No. REQ.	MATERIAL
		BRASS

SCALE TWICE SIZE

COUPLING ASSY-
FUEL LINE SWIVEL

DRAWN	CHECKED	APPROVED
C.K. 7-13-43	L.E.K. 7-14-43	

74291

NO. 195-M ALBANENE A. & B. SMITH CO., PGH., PA.

360

A360

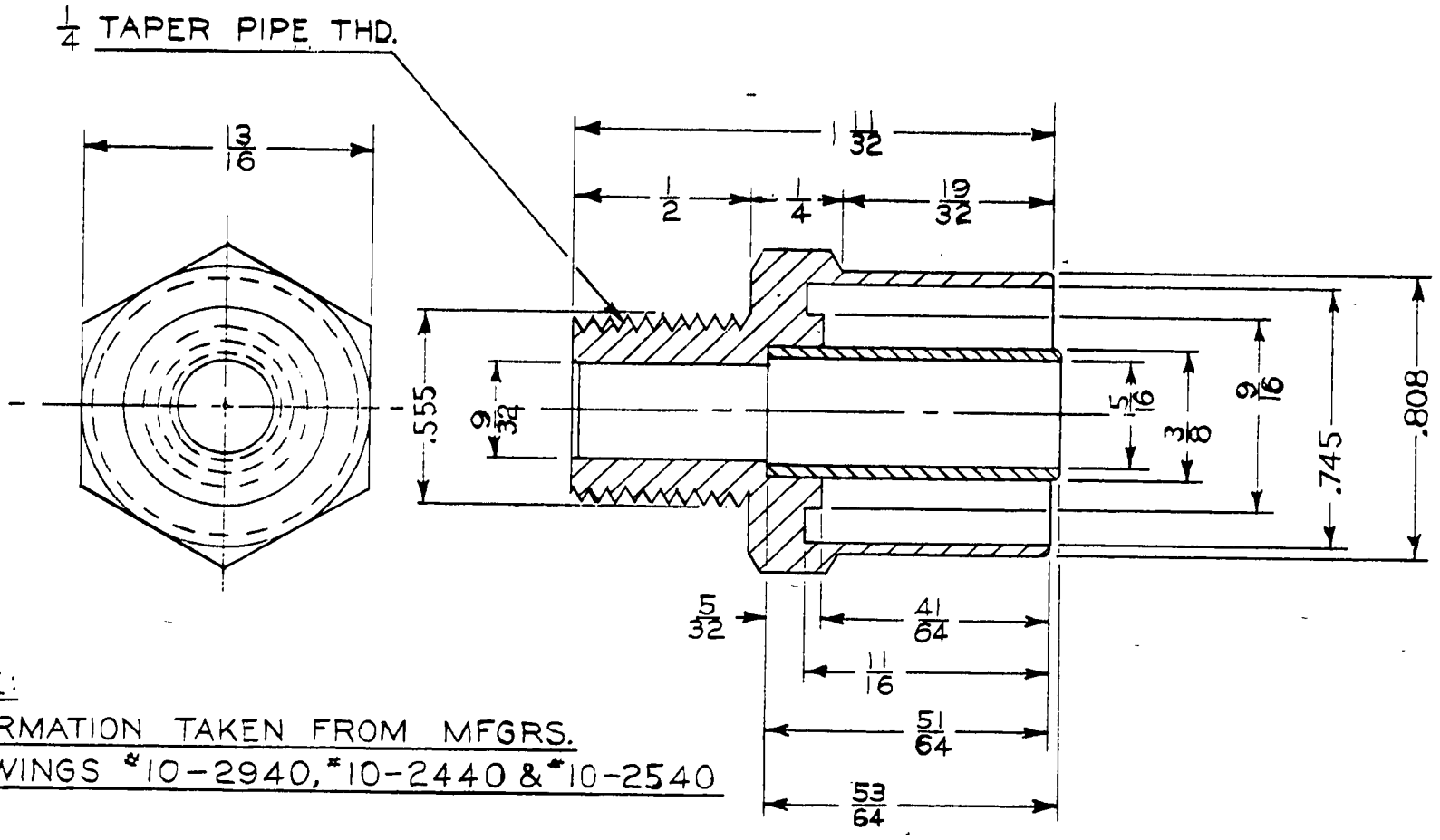

NOTE:
INFORMATION TAKEN FROM MFGRS.
DRAWINGS #10-2940, #10-2440 & #10-2540

GAS HOSE SOLID COUPLING #1231-M (B)(A)
PURCH. GATES RUBBER CO.,
DENVER, COLORADO.

MODEL	PER SHIP	NEXT ASSEMBLY	SUPERSEDES	SUPERSEDED BY
J5C	1	70322		
L-14	2	91227 91228		
J5D-H	2	70322		
J3F-65	1	70322		
J3L-65	1	70322		
J3C-65	1	70322		
L4A-4D	1	70322		

LET.	REVISION	DATE	SR.	BY
B	J5C PER SHIP 1 WAS 2	11-15-45		I.M.M.
A	L-14 MODEL REF. ADDED	7-5-45		I.M.M.

PIPER AIRCRAFT CORP.
LOCK HAVEN, PENNA.

PART No.	No. REQ.	MATERIAL
		BRASS

SCALE TWICE SIZE

COUPLING ASSY-
FUEL LINE SOLID

DRAWN	CHECKED	APPROVED
C.K. 7-12-43	L.E.K. 7-14-43	

74301

198-M ALBANENE A. & B. SMITH CO., PGH., PA.

361

A361

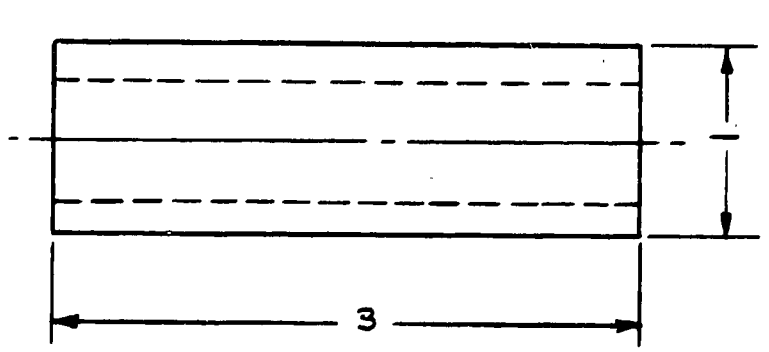

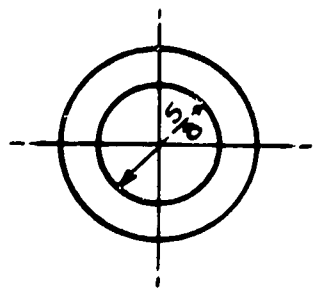

LET	REVISION	DATE	BY
F	REDRAWN WITHOUT CHANGE	6-8-51	JMM
E	J5C MODEL REF. ADDED	1-22-46	JMM
D	L-14 MODEL REF. ADDED	7-8-45	JMM
C	L-4A N.A.-75224 WAS 72883	2-20-45	E.L.R.
B	NOTE ℄ ASTERISK REMOVED	1-11-45	J.B.W.
A	J3C-65 MODEL REF. ℄ NOTE ADDED	2-16-44	J.D.B.

MODEL	PER PLANE	NEXT ASSEMBLY	SUPERSEDES	SUP. BY
J5C	1	75266		
L-14	1	91390		
J3C65	1	72883	74281	
L-4A	1	75224	74281	

THIS DRAWING IS THE PROPERTY OF THE PIPER AIRCRAFT CORP. AND ITS POSSESSION BY UNAUTHORIZED PERSONS SHALL NOT BE CONSTRUED AS PERMISSION TO REPRODUCE FOR SALE IN WHOLE OR IN PART ANY DEVICES SHOWN THEREON.

PIPER AIRCRAFT CORP.
LOCK HAVEN, PENNA.

PART NO.	NO. REQ.	SIZE	DESCRIPTION / MATERIAL
		I.D. x 5/8 I.D. x 3	RUBBER A.A.F. SPEC. 26577 PURCH. GATES RUBBER CO.

SCALE FULL SIZE | TOTAL WT.—LBS.

FINISH—PIPER SPECIFICATION # 10

MANUFACTURING PRACTICES—PIPER SPECIFICATION # 9

HOSE — BREATHER LINE CONNECTOR

DRAFTSMAN	CHECKER	STANDARDS	
M.G.S. 8-2-43	C.K. 8-3-43		74311

A362

362

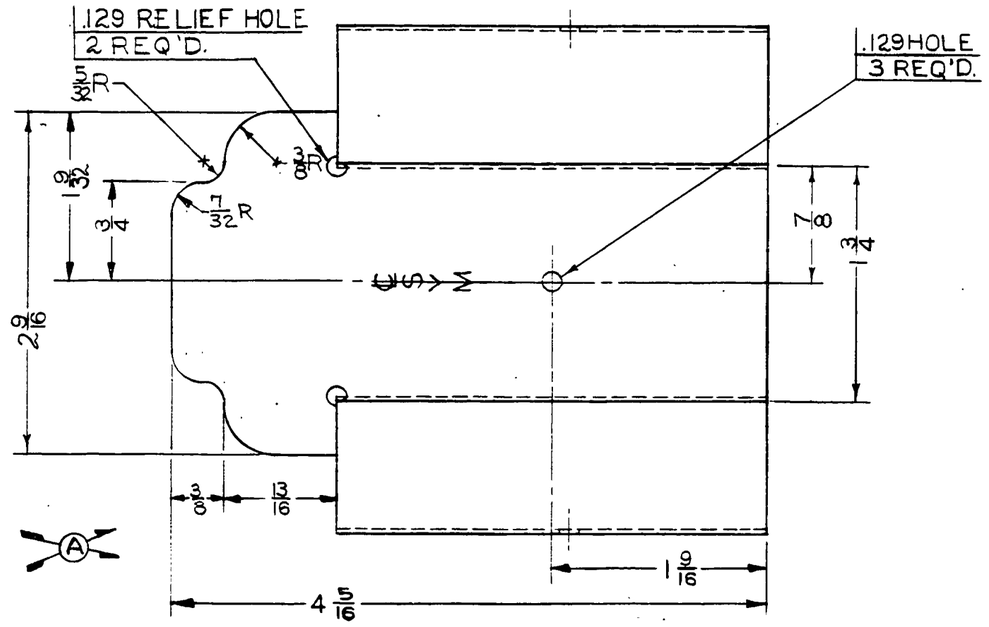

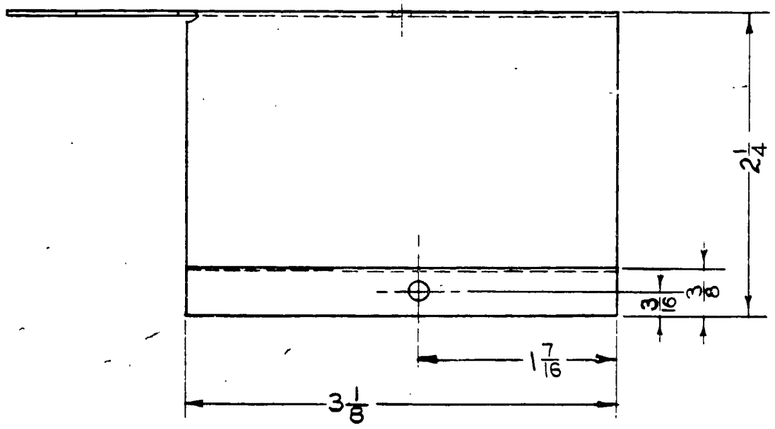

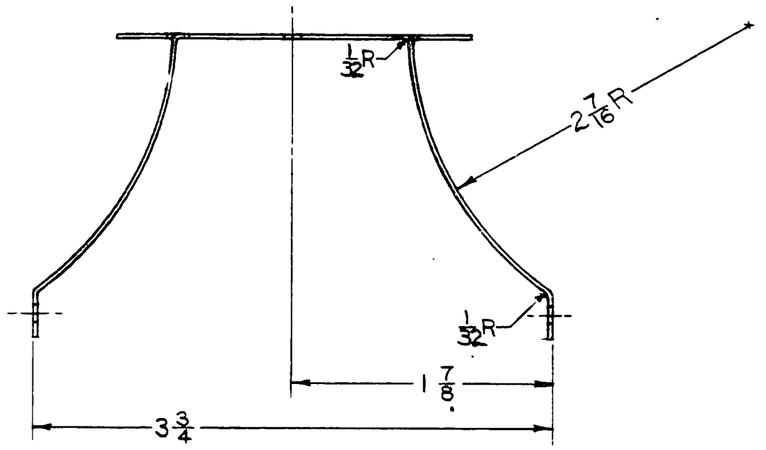

LIMITS, SHOP PRACTICES AND FINISH. UNLESS OTHERWISE NOTED, TO BE IN ACCORDANCE WITH PIPER SPECIFICATIONS #9 AND #10.

LET.	REVISION	DATE	BY
A	3/8 WAS 1/2, 4 5/16 WAS 4 7/16	6-14-46	J.H.

MODEL	PER SHIP	NEXT ASSEMBLY	SUPERSEDES	SUP. BY
J5C	A	74965	J5705	

PIPER AIRCRAFT CORP.
LOCK HAVEN, PENNA.

PART No.	NO. REQ.	SIZE	MATERIAL
		.032 × 4 5/16 × 6 15/16	3S-1/2 H. ALUM.

SCALE FULL SIZE — TOTAL WT. - LBS.
FINISH

BAFFLE - ENGINE INTERCYLINDER (INNER)

DRAWN	CHECKED	APPROVED
E. NICHOLAS 9-13-44	R.E.T. 9-14-44	

74912

664

A664

NOTE A:

.128 HOLE ON PART NO. 80002-22, 80002-20, 80002-18 & 80002-19 ONLY.

MATERIAL: #1025 STEEL UNLESS OTHERWISE NOTED, STAINLESS STEEL, TYPE 347, ANNEALED 2D FINISH MAY BE USED AS AN ALTERNATE FOR PART NOS. 80002-18, 80002-19, & 80002-20.

NOTE: ALL DIMENSIONS ARE IN INCHES.

RADIUS "E" TO BE EQUAL TO THICKNESS "T".

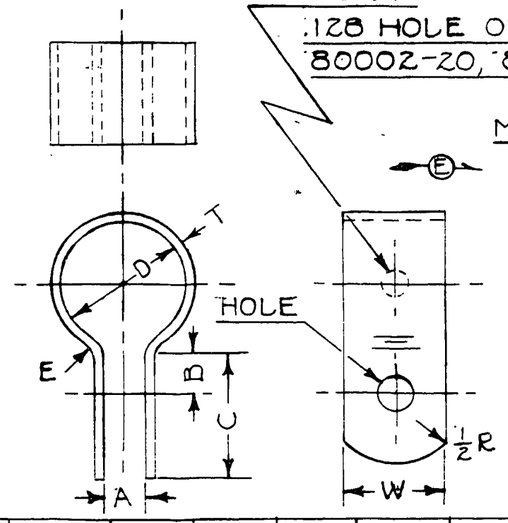

PART NO.	D	T	W	A	B	C	HOLE	REMARKS
80002-2	3/16 +0 -1/32	.032	5/8	1/16	5/16	5/8	.141	WAS PART #714
80002-3	1/4 +0 -1/32	.032	5/8	1/16	3/8	5/8	.191	WAS PART #J2-213
80002-4	1/4	.032	1/2	1/16	1/2	3/4	.191	WAS PART #4048
80002-5	5/16 +0 -1/32	.032	3/8	3/32	3/16	3/8	.141	WAS PART #822
80002-6	3/8 +0 -1/32	.032	3/8	3/32	3/16	3/8	.141	WAS PART #J2-2021
80002-7	1/2 +0 -1/32	.032	3/8	1/8	3/16	3/8	.141	WAS PART #821
80002-8	1/2	.032	5/8	1/8	1/2	3/4	.191	WAS PART #4154
80002-9	5/8 +0 -1/32	.045	5/8	1/8	3/8	11/16	.191	WAS PART #J2-2076. THIS PART MAY BE USED IN PLACE OF 80002-10 IN ALL CASES.
80002-10	5/8	.045	7/8	1/8	5/16	5/8	.191	WAS PART #J3-74
80002-11	3/4	.045	5/8	1/4	1/4	1/2	.191	WAS PART #4043
80002-12	3/4 +0 -1/32	.045	5/8	1/4	3/8	11/16	.191	WAS PART #J3-903
80002-13	7/8 +0 -1/32	.045	5/8	1/4	3/8	11/16	.191	WAS PART #863
80002-14	1	.045	5/8	1/8	1/4	9/16	.191	WAS PART #826
80002-15	1 +0 -1/32	.032	3/8	3/16	3/16	3/8	.141	WAS PART #4106
80002-16	1 1/8	.045	3/4	1/8	1/4	1/2	.191	WAS PART #8075
80002-17	1/2	.062	5/8	1/8	5/8	5/8	.191	WAS PART #882
80002-18	1 1/2 +0 -1/32	.032	3/8	1/4	1/4	9/16	.191	WAS PART #7138 SEE NOTE "A"
80002-19	1 5/8	.032	3/8	1/4	1/4	9/16	.191	WAS PART #7281 SEE NOTE "A"
80002-20	2 1/16	.045	5/8	1/4	1/4	1/2	.191	WAS PART #7318 SEE NOTE "A"
80002-21	1 1/2	.045	5/8	1/4	5/16	9/16	.191	WAS PART #896
80002-22	3 +0 -1/32	.045	5/8	1/8	3/8	11/16	.191	WAS PART #7004 SEE NOTE "A"
80002-23	3/4	.062	5/16	1/8	3/16	3/8	.141	WAS PART #8022
80002-24	1/2	.032	5/8	1/8	1/4	9/16	.191	WAS PART #8057
80002-25	3/4 +0 -1/32	.045	5/16	1/8	3/16	3/8	.141	WAS PART #8069
80002-26	5/8 +0 -1/32	.045	5/16	1/8	5/16	3/8	.141	WAS PART #8050
80002-27	5/4 +0 -1/32	.045	5/8	1/8	1/4 +1/32 -1/8	9/16	.191	WAS PART #8094
80002-28	2 +0 -1/32	.062	1/2	1/4	5/16	9/16	.191	WAS PART #7578 ST. STL.

PART NO.	D	T	W	A	B	C	HOLE	REMARKS	DATE ADDED
80002-29	1 1/2	.062	1/2	1/8	1/4	1/2	.191	WAS PART #4230	
80002-30	7/8	.062	3/4	1/4	3/8	3/4	.191	WAS PART #4251	
80002-31	5/8	.062	5/8	1/8	3/8	5/8	.191	WAS PART #8111	
80002-32	5/8	.062	1	3/16	5/16	5/8	.191	WAS PART #8120	
80002-33	3/4	.062	5/8	3/16	1/4	9/16	.191	WAS PART #2631	
80002-34	3	.045	7/8	1/8	5/16	5/8	.191	WAS PART #7162	
80002-35	1 5/8	.045	5/8	1/8	1/4	1/2	.191	WAS PART #7133	
80002-36	5/8	.045	7/8	1/4	3/8	5/8	.191	WAS PART #4147	
80002-37	1/2	.032	3/8	3/16	3/16	3/8	.141	WAS PART #559	
80002-38	3/4	.045	5/8	5/16	1/16	1 5/8	.250	WAS PART #2020	
80002-39	5/16	.032	3/8	3/32	3/16	3/8	.191		
80002-40	7/8	.062	1	5/16	3/8	3/4	.250	WAS PART #501	
80002-41	3/16	.045	3/4	—	1/2	3/4	.191	WAS PART #1145	
80002-42	5/8 +3/32 -0	.045	3/4	—	1/2	7/8	.250	WAS PART #500	
80002-43	5/8	.045	3/4	—	1 1/16	1 1/8	.250	WAS PART #59	
80002-44	1 1/2 +0 -1/32	.062	1	1 1/4	1	1 1/2	.250	WAS PART #80141	
80002-45	2 1/16	.062	5/8	1 1/8	1/4	1/2	.191	SUPERCEDES 7561	
80002-46	1 +0 -1/32	.062	3/4	1/4	1/2	7/8	.250		
80002-47	1 3/16	.032	3/8	3/16	3/16	3/8	.141		
80002-48	2 1/8	.032	1/2	1/8	3/16	3/8	.141		12-17-42
80002-49	5/8	.032	1/2	1/8	3/16	3/8	.141		12-17-42
80002-50	1 1/8	.032	3/8	3/16	3/16	3/8	.191		1-1-43
80002-51	5/8	.032	3/8	1/8	3/16	3/8	.191		1-1-43
80002-52	2 1/8	.032	3/8	3/16	3/16	3/8	.166		6-3-43
80002-53	7/8 +9/32 -0	.045	5/8	1/8	5/16	5/8	.191		6-16-43
80002-54	7/8	.062	1/2	1/8	1/4	9/16	.191		6-22-44
80002-55	3/4	.045	3/4	7/16	1/2	7/8	.191		
80002-56	3/16	.062	3/4	—	1/2	7/8	.191		
80002-57	3/8	.032	5/16	1/16	3/32	11/32	.098		
80002-58	1	.045	1	1/8	3/8	3/4	.249 .255		
80002-59	5/8	.045	1	1/8	3/8	3/4	.249 .255		
80002-60	15/16	.045	3/4	1/4	1/4	1/2	.191		
80002-61	7/8	.062	1	5/16	1/2	7/8	.250		

SEE ALSO DWG. 10466

O	.250 HOLE WAS .191 FOR -46	5-12-49	I.M.M.
N	NOTE ADDED	1-18-46	HMZ
M	ON -61 C 7/8 WAS 7/16	7-27-45	I.M.M.
L	ON -55 C 5/8 WAS 9/32, B 1/2 WAS 3/8	7-5-45	I.M.M.
K	-61 ADDED	7-5-45	E.L.N.
J	"D" DIM. WAS 7/32 "A" DIM. WAS 1/8 FOR -60	6-1-45	H.M.Z.
H	-60 ADDED	5-10-45	H.M.M.
G	-58, -59 ADDED	1-22-45	H.M.Z.
F	REDRAWN WITHOUT CHANGE	1-10-45	J.B.W.
E	ALT. MAT'L. ADDED FOR -18, -19, -20	12-12-44	I.D.B.
D	-55, -56, -57 ADDED	12-12-44	I.D.B.
C	-54 ADDED	6-22-44	I.D.B.
B	REDRAWN & REVISED	2-5-44	V.C.
LET.	REVISION	DATE	BY

PIPER AIRCRAFT CORP.
LOCK HAVEN, PENNA.

FINISH - PIPER SPECIFICATION #10
MANUFACTURING PRACTICES - PIPER SPECIFICATION #5

CLAMPS - ROUND

DRAWN	CHECKED	STANDARD
V. COWLEY	M. G. S.	
2-24-44	2-7-44	

80002

A665

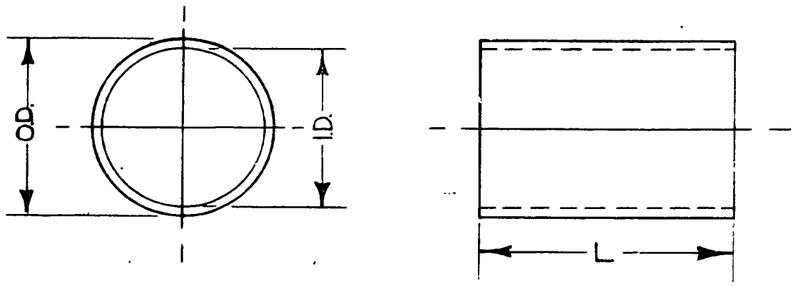

PART NO.	O. D. OR TUBE SIZE	I. D.	L.	MAT'L.	REMARKS
80012-2	.191 / .187	1/16	3/8	C.R. STEEL	WAS PART #4073
80012-3	1/4	.191	5/16	#1025 STEEL	WAS PART #J2-453
80012-4	1/4 x .028	—	.375	#1025 STEEL	WAS PART #4015
80012-5	1/4 x .028	—	1	#1025 STEEL	WAS PART #J2-549
80012-6	1/4 x .028	—	1/8	#1025 STEEL	WAS PART #J2-546
80012-7	5/16 x .028	—	5/8	#1025 STEEL	WAS PART #J2-235
80012-8	5/16 x .028	—	7/8	#1025 STEEL	WAS PART #J2-500
80012-9	5/16 x .035	1/4	1/2	#1025 STEEL	WAS PART #318
80012-10	5/16 x .035	1/4	11/16	#1025 STEEL	WAS PART #361
80012-11	5/16 x .058	—	7/16	MECH.	WAS PART #E2-154
80012-12	5/16 x .058	—	9/16	MECH.	WAS PART #866
80012-13	5/16 x .058	—	3/4	MECH.	WAS PART #2213
80012-14	5/16 x .058	—	13/16	MECH.	WAS PART #388
80012-15	3/8 x .028	—	1/4	#1025 STEEL	WAS PART #7025
80012-16	3/8 x .035	5/16	1	#1025 STEEL	WAS PART #4065
80012-17	3/8 x .065	.250 / .255	7/32	#1010 STEEL	WAS PART #J3-409
80012-18	3/8	1/4	15/32	MILD STEEL	WAS PART #4138
80012-19	3/8	.250 / .255	9/16	MILD STEEL	WAS PART #4107
80012-20	3/8 x .065	.250 / .255	3/8	#1025 SEAMLESS STEEL TUBE	WAS PART #E2-52
80012-21	3/8	.244 / .249	3/4	#1025 STEEL	WAS PART #E2-53
80012-22	3/8 x .065	.250 / .255	.188	#1025 STEEL	WAS PART #J2-48
80012-23	3/8 x .065	1/4	9/32	MILD STEEL	WAS PART #4087
80012-24	3/8 x .065	.247	5/8	#1025 STEEL	WAS PART #4046
80012-25	5/16 x .058	—	5/8	MECH.	WAS PART #2509
80012-26	3/8 x .083	.209	.750	#1010 STEEL	WAS PART #4079
80012-27	3/8 x .065	—	15/16	#1025 STEEL	WAS PART #2041
80012-28	3/8 x .065	—	1 1/16	#1025 STEEL	WAS PART #J3-242
80012-29	3/8 x .065	—	1 5/16	#1025 STEEL	WAS PART #3040 & J3-33
80012-30	7/16	.310	3/4	#1025 STEEL	WAS PART #2332
80012-31	7/16 x .035	—	1 11/16	#1025 STEEL	WAS PART #541
80012-32	7/16 x .065	5/16	3/16	#1025 STEEL	WAS PART #J2-341
80012-33	7/16 x .065	—	15/32	#1025 STEEL	WAS PART #J2-226
80012-34	7/16 x .065	5/16	15/16	#1025 STEEL	WAS PART #J3-30
80012-35	7/16 x .065	—	1	#1025 STEEL	WAS PART #J2-306
80012-36	7/16 x .065	—	1 3/8	#1025 STEEL	WAS PART #2222
80012-37	1/2 x .035	—	3/8	MILD STEEL	WAS PART #593
80012-38	1/2 x .058	—	1	#1025 STEEL	WAS PART #2149
80012-39	1/2 x .058	—	3/4	#1025 STEEL	WAS PART #2310
80012-40	1/2 x .058	—	1 3/16	#1025 STEEL	WAS PART #2095
80012-41	1/2 x .058	—	2 1/8	#1025 STEEL	WAS PART #2108
80012-42	.500-.495	3/8	11/32	MILD STEEL	WAS PART #4135
80012-43	1/2	.367 / .372	1/2	#1025 STEEL	WAS PART #353
80012-44	1/2 x .065	—	1 1/4	#1025 STEEL	WAS PART #396
80012-45	1/2 x .065	—	5/8	#1025 STEEL	WAS PART #542
80012-46	1/2 x .065	3/8	11/16	#1025 STEEL	WAS PART #2034
80012-47	1/2 x .065	3/8	1	#1025 STEEL	WAS PART #1023
80012-48	.500-.495	5/16	11/32	MILD STEEL	WAS PART #4136
80012-49	1/2	5/16	1	MILD STEEL	WAS PART #1024
80012-50	9/16 x .035	—	9/16	#1025 STEEL	WAS PART #357
80012-51	9/16 x .035	—	3/4	#1025 STEEL	WAS PART #356
80012-52	9/16 x .065	.437	7/16	#1025 STEEL	WAS PART #4126
80012-53	9/16 x .065	7/16	3/4	#1025 STEEL	WAS PART #335
80012-54	9/16 x .065	—	1 1/16	#1025 STEEL	WAS PART #311
80012-55	9/16 x .065	.421 / .426	1 1/4	#1025 STEEL	WAS PART #J2-313
80012-56	9/16 x .065	—	1 1/2	#1025 STEEL	WAS PART #341
80012-57	1/4 x .028	—	1/4	#1025 STEEL	WAS PART #4326
80012-58	1/2 x .065	3/8	1 5/16	#1025 STEEL	WAS PART #2659
80012-59	3/8 x .083	.209	3/8	#1010 STEEL	~~WAS PART #J3-428~~
80012-60	3/8 x .065	1/4	3/16 +.010 -.000	#4130 STEEL	
80012-61	7/16 x .065	1/4	17/32	#1025 STEEL	
80012-62	3/8	.249 / .255	1/2	#1025 STEEL	
80012-63	3/8 x .065	17/64	13/64 +.005 -.000	#4130 STEEL	
80012-64	1/2	.367 / .372	15/32	#1025 STEEL	
80012-65	3/4 x .049	—	5/16	#4130 STEEL	WAS PART #J3-702 ADDED 3/25/42

LET	REVISION	DATE	BY
AC	ON-43 1/2 O.D. .369/.372 I.D. WAS 1/2 x .065	2-27-47	I.M.M.
AB	.065 REM. .367/.372 ADDED FOR-64	6-7-46	R.S.C.
AA	.028 REM. .191 I.D. ADDED FOR-3	3-20-46	H.M.Z.
Z	I.D. OF 421/426 FOR-55 ADD.	2-21-46	D.W.
Y	ON-21 244/249 I.D. ADD.	1-17-46	B.C.
X	.083 REM. FROM O.D. FOR-21	1-17-46	B.C.
W	.250/.255 WAS 1/4 FOR -19	4-13-45	E.L.N.
V	.191/.187 WAS 3/16 O.D. FOR-2	3-23-45	I.D.B.
U	.248/.253 WAS 1/4 I.D. FOR-62	2-28-45	J.B.M.
T	NOTE 2 REVISED	2-23-45	J.B.M.
S	REDRAWN WITHOUT CHANGE	10-10-44	R.D.R.
R	ON-20, #1025 WAS #1010	9-7-44	I.D.B.
Q	ON-21, .083 WAS .065	6-30-44	A.L.N.
P	ON-65, #4130 WAS #1025	10-29-43	C.E.K.
O	ON-59, 3/8 x .083 WAS 3/8 x .065	10-29-43	C.E.K.
N	ON-26, 3/8 x .083 WAS 3/8 x .065	10-29-43	C.E.K.
M	ON-26 & 59, #1010 WAS #1025	10-29-43	C.E.K.
L	ON-26 & 59, .209 ADDED	10-29-43	C.E.K.
K	ON-17 & 20, #1010 WAS #1025	10-29-43	C.E.K.
J	ON-17 & 20, 3/8 x .065 WAS 3/8	10-29-43	C.E.K.
H	-29 WAS 1/4 I.D.	7-14-43	M.G.S.
G	-26 WAS 3/4 L.	7-14-43	M.G.S.
F	-22 WAS 1/4 I.D.; 3/16 L.	7-14-43	M.G.S.
E	-21 WAS 3/8 OD; 1/4 ID	7-14-43	M.G.S.
D	I.D. OF -17, -20 WAS 1/4	7-14-43	M.G.S.
C	.375 WAS 3/8 FOR-4	6-11-43	C.E.K.
B	1/4 I.D. REMOVED FROM-59	4-14-43	R.R.F.
A	-30 WAS 7/16 x .065	12-22-42	M.G.S.

NOTES:
1: ALL DIMENSIONS ARE IN INCHES.
2: SEE ALSO DWGS. 80022, 82752 & 86102.

LIMITS, SHOP PRACTICES AND FINISH, UNLESS OTHERWISE NOTED, TO BE IN ACCORDANCE WITH PIPER SPECIFICATIONS 69 AND 93.

PIPER AIRCRAFT CORP.
LOCK HAVEN, PENNA.

BUSHINGS
SHEET I

V.F.	J.B.	
4-16-41	4-21-41	
DRAWN	CHECKED	APPROVED

80012

A666

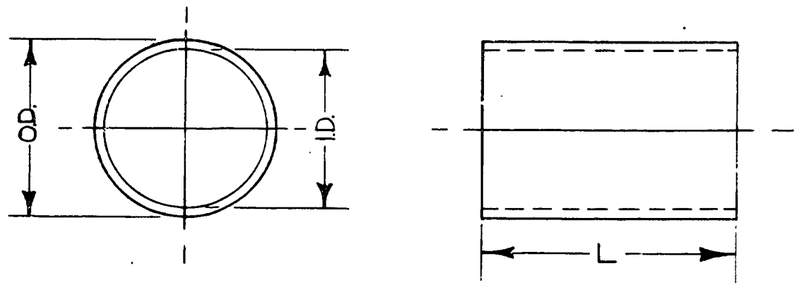

PART NO.	O. D. OR TUBE SIZE	I. D.	L.	MAT'L.	REMARKS
80012-2	.191 / .187	1/16	3/8	C.R. STEEL	WAS PART #4073
80012-3	1/4	.191	5/16	#1025 STEEL	WAS PART #J2-453
80012-4	1/4 x .028	—	.375	#1025 STEEL	WAS PART #4015
80012-5	1/4 x .028	—	1	#1025 STEEL	WAS PART #J2-549
80012-6	1/4 x .028	—	1/8	#1025 STEEL	WAS PART #J2-546
80012-7	5/16 x .028	—	5/8	#1025 STEEL	WAS PART #J2-235
80012-8	5/16 x .028	—	7/8	#1025 STEEL	WAS PART #J2-500
80012-9	5/16 x .035	1/4	1/2	#1025 STEEL	WAS PART #318
80012-10	5/16 x .035	1/4	11/16	#1025 STEEL	WAS PART #361
80012-11	5/16 x .058	—	7/16	MECH.	WAS PART #E2-154
80012-12	5/16 x .058	—	9/16	MECH.	WAS PART #866
80012-13	5/16 x .058	—	3/4	MECH.	WAS PART #2213
80012-14	5/16 x .058	—	13/16	MECH.	WAS PART #388
80012-15	3/8 x .028	—	1/4	#1025 STEEL	WAS PART #7025
80012-16	3/8 x .035	5/16	1	#1025 STEEL	WAS PART #4065
80012-17	3/8 x .065	.250 / .255	7/32	#1010 STEEL	WAS PART #J3-409
80012-18	3/8	1/4	15/32	MILD STEEL	WAS PART #4138
80012-19	3/8	.250 / .255	9/16	MILD STEEL	WAS PART #4107
80012-20	3/8 x .065	.250 / .255	3/8	#1025 SEAMLESS STEEL TUBE	WAS PART #E2-52
80012-21	3/8	.244 / .249	3/4	#1025 STEEL	WAS PART #E2-53
80012-22	3/8 x .065	.250 / .255	.188	#1025 STEEL	WAS PART #J2-48
80012-23	3/8 x .065	1/4	9/32	MILD STEEL	WAS PART #4087
80012-24	3/8 x .065	.247	5/8	#1025 STEEL	WAS PART #4046
80012-25	5/16 x .058	—	3/8	MECH.	WAS PART #2509
80012-26	3/8 x .083	.209	.750	#1010 STEEL	WAS PART #4079
80012-27	3/8 x .065	—	15/16	#1025 STEEL	WAS PART #2041
80012-28	3/8 x .065	—	1 1/16	#1025 STEEL	WAS PART #J3-242
80012-29	3/8 x .065	—	1 5/16	#1025 STEEL	WAS PART #3040 & J3-33
80012-30	7/16	.310	3/4	#1025 STEEL	WAS PART #2332
80012-31	7/16 x .035	—	1 11/16	#1025 STEEL	WAS PART #541
80012-32	7/16 x .065	5/16	3/16	#1025 STEEL	WAS PART #J2-341
80012-33	7/16 x .065	—	15/32	#1025 STEEL	WAS PART #J2-226
80012-34	7/16 x .065	5/16	15/16	#1025 STEEL	WAS PART #J3-30
80012-35	7/16 x .065	—	1	#1025 STEEL	WAS PART #J2-306
80012-36	7/16 x .065	—	1 3/8	#1025 STEEL	WAS PART #2222
80012-37	1/2 x .035	—	3/8	MILD STEEL	WAS PART #593
80012-38	1/2 x .058	—	1	#1025 STEEL	WAS PART #2149
80012-39	1/2 x .058	—	3/4	#1025 STEEL	WAS PART #2310
80012-40	1/2 x .058	—	1 3/16	#1025 STEEL	WAS PART #2095
80012-41	1/2 x .058	—	2 1/8	#1025 STEEL	WAS PART #2108
80012-42	.500-.495	3/8	11/32	MILD STEEL	WAS PART #4135
80012-43	1/2	.367 / .372	1/2	#1025 STEEL	WAS PART #353
80012-44	1/2 x .065	—	1 1/4	#1025 STEEL	WAS PART #396
80012-45	1/2 x .065	—	5/8	#1025 STEEL	WAS PART #542
80012-46	1/2 x .065	3/8	11/16	#1025 STEEL	WAS PART #2034
80012-47	1/2 x .065	3/8	1	#1025 STEEL	WAS PART #1023
80012-48	.500-.495	5/16	11/32	MILD STEEL	WAS PART #4136
80012-49	1/2	5/16	1	MILD STEEL	WAS PART #1024
80012-50	9/16 x .035	—	9/16	#1025 STEEL	WAS PART #357
80012-51	9/16 x .035	—	3/4	#1025 STEEL	WAS PART #356
80012-52	9/16 x .065	.437	7/16	#1025 STEEL	WAS PART #4126
80012-53	9/16 x .065	7/16	3/4	#1025 STEEL	WAS PART #335
80012-54	9/16 x .065	—	1 1/16	#1025 STEEL	WAS PART #311
80012-55	9/16 x .065	.421 / .426	1 1/4	#1025 STEEL	WAS PART #J2-313
80012-56	9/16 x .065	—	1 1/2	#1025 STEEL	WAS PART #341
80012-57	1/4 x .028	—	1/4	#1025 STEEL	WAS PART #4326
80012-58	1/2 x .065	3/8	1 5/16	#1025 STEEL	WAS PART #2659
80012-59	3/8 x .083	.209	3/8	#1010 STEEL	~~WAS PART #J3-428~~
80012-60	5/8 x .065	1/4	3/16 +.010 -.000	#4130 STEEL	
80012-61	7/16 x .065	1/4	17/32	#1025 STEEL	
80012-62	3/8	.249 / .255	1/2	#1025 STEEL	
80012-63	3/8 x .065	17/64	13/64 +.005 -.000	#4130 STEEL	
80012-64	1/2	.367 / .372	15/32	#1025 STEEL	
80012-65	3/4 x .049	—	5/16	#4130 STEEL	WAS PART #J3-702 ADDED 3/25/42

LET	REVISION	DATE	BY
AC	ON-43 1/2 OD, .369/.372 I.D. WAS 1/2 x .065	2-27-47	I.M.M.
AB	.065 REM: .367/.372 ADDED FOR-64	6-7-46	R.S.C.
AA	.028 REM. .191 I.D. ADDED FOR-33	3-20-46	H.M.Z.
Z	I.D. OF .421/.426 FOR-55 ADD.	2-21-46	D.W.
Y	ON-21 .244/.249 I.D. ADD.	1-17-46	B.C.
X	.083 REM. FROM O.D. FOR-21	1-17-46	B.C.
W	.250/.255 WAS 1/4 FOR -19	4-13-45	E.L.N.
V	.191/.187 WAS 3/16 O.D. FOR-2	3-23-45	I.D.B.
U	.249/.255 WAS 1/4 I.D. FOR-62	2-28-45	J.B.M.
T	NOTE 2 REVISED	2-23-45	J.B.W.
S	REDRAWN WITHOUT CHANGE	10-10-44	R.D.R.
R	ON-20, #1025 WAS #1010	9-7-44	I.D.B.
Q	ON-21, .083 WAS .065	6-30-44	A.L.N.
P	ON-65, #4130 WAS #1025	10-29-43	C.E.K.
O	ON-59, 3/8 x .083 WAS 3/8 x .065	10-29-43	C.E.K.
N	ON-26, 3/8 x .083 WAS 3/8 x .065	10-29-43	C.E.K.
M	ON-26 & 59, #1010 WAS #1025	10-29-43	C.E.K.
L	ON-26 & 59, .209 ADDED	10-29-43	C.E.K.
K	ON-17 & 20, #1010 WAS #1025	10-29-43	C.E.K.
J	ON-17 & 20, 3/8 x .065 WAS 3/8	10-29-43	C.E.K.
H	-29 WAS 1/4 I.D.	7-14-43	M.G.S.
G	-26 WAS 3/4 L.	7-14-43	M.G.S.
F	-22 WAS 1/4 I.D.; 3/16 L.	7-14-43	M.G.S.
E	-21 WAS 3/8 OD; 1/4 I.D.	7-14-43	M.G.S.
D	I.D. OF -17, -20 WAS 1/4	7-14-43	M.G.S.
C	.375 WAS 3/8 FOR-4	6-11-43	C.E.K.
B	1/4 I.D. REMOVED FROM-59	4-14-43	R.R.F.
A	-30 WAS 7/16 x .065	12-22-42	M.G.S.

NOTES:
1: ALL DIMENSIONS ARE IN INCHES.
2: SEE ALSO DWGS. 80022, 82732 & 86102.

LIMITS, SHOP PRACTICES AND FINISH, UNLESS OTHERWISE NOTED, TO BE IN ACCORDANCE WITH PIPER SPECIFICATIONS 69 AND 830.

PIPER AIRCRAFT CORP.
LOCK HAVEN, PENNA.

BUSHINGS
SHEET I

V.F.	J.B.	
4-16-41	4-21-41	
DRAWN	CHECKED	APPROVED

80012

A666

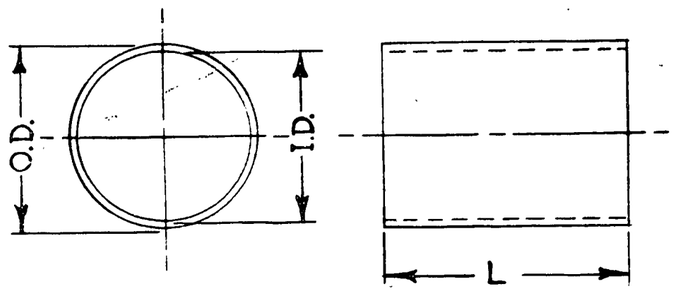

PART NO.	O.D. OR TUBE SIZE	I.D.	L	MATERIAL
80022-2	5/8 x .049		3/4	#1025 STEEL
80022-3	5/8 x .058		1 3/8	#1025 STEEL
80022-4	5/8 x .065		1/2	#1025 STEEL
80022-5	5/8 x .065	1/2	1 1/2	#1025 STEEL
80022-6	.665 x .035		1/2	#4130 STEEL
80022-7	3/4 x .065	5/8	7/8	#1025 STEEL
80022-8	3/4 x .058		1 13/16	#1025 STEEL OR MECH. TUBE
80022-9	7/8 x .049		1	#1025 STEEL
80022-10	1 1/4 x .058		1/4	#4130 STEEL
80022-11	1 1/4 x .058		1/2	#4130 STEEL
80022-12	1 3/8 x .058		1/4	#1025 STEEL
80022-13	1 7/16	1 1/4	1/2	#1010 STEEL
80022-14	1 5/8 x .058		1/8	#1025 STEEL
80022-15	1 5/8 x .065	1 1/2	7/8	#1025 STEEL
80022-16	7/16	5/16	1	#1025 STEEL
~~80022-17~~	~~1/2 x .058~~		~~3/4~~	~~#1025 STEEL~~
80022-18	1/2 x .035		13/16	#1025 STEEL
80022-19	5/8 x .035		1/2	#1025 STEEL
80022-20	1/2	.365/.375	3/4	#1025 STEEL
80022-21	1/2	.371/.374	.750	#1025 STEEL SEAMLESS TUBE
80022-22	1/2	.371/.374	.375	#1025 STEEL SEAMLESS TUBE
80022-23	5/16 x .058		1/4	#1025 STEEL
80022-24	1/4	#28 DRILL	1/2	C. R. STEEL
80022-25	1/2 x .035		9/16	#1025 STEEL
80022-26	.4415/.4375 x .065		1 1/4	#1025 STEEL
80022-27	3/8 x .065		7/8	#1025 STEEL
80022-28	.4375 +.005 -.000	.310 +.002 -.000	1 1/2	#1025 STEEL
80022-29	1/2	.367/.372	1 1/2	#1025 STEEL
80022-30	1/2	#11 DRILL	7/16	#1025 STEEL
80022-31	.378/.375	.2115/.2135	1	#1025 STEEL

PART NO.	O.D. OR TUBE SIZE	I.D.	L	MATERIAL
80022-32	.375 +.000 -.005 x .028		7/16	#1025 STEEL
80022-33	.313 +.001 -.000	3/16	1/4	#1025 STEEL
80022-34	.377/.375	.245	5/8	#1025 STEEL
80022-35	7/16	5/16	1 1/16	#1025 STEEL
80022-36	7/16 x .083	1/4	1 1/4	#1010 STEEL
80022-37	1 1/16 x .095	1 1/2	1	#1025 STEEL
80022-38	7/8 x .058		15/32	#1025 STEEL
80022-39	7/8 x .058		3/4	#1025 STEEL
80022-40	3/4	5/8	5/8	HARD FIBER
80022-41	3/4	1/4	3/4	HARD FIBER
80022-42	3/8	3/16	3/8	HARD FIBER
80022-43	1 5/8 x .058	1.506 MIN.	5/16	#1025 STEEL SEAMLESS TUBE
80022-44	.380/.375	.240/.250	.750	BRONZE
80022-45	.380/.375	.240/.250	.375	BRONZE
80022-46	7/16 x .035		1/4	#1025 STEEL
80022-47	.4415/.4375	.3065/.3115	15/32	BRONZE
80022-48	7/16	5/16	19/32	BRONZE
80022-49	7/16	5/16	11/16	BRONZE
80022-50	1/2	3/8	1 1/2	BRONZE
80022-51	1 5/8 x .058		1/4	#1025 STEEL
80022-52	5/8 x .065		3/8	#1025 STEEL
80022-53	1 7/8 x .062		1/8	MECH. TUBE
80022-54	7/16 x .083		2	MECH. TUBE
80022-55	1	1/4	3/4	RUBBER
80022-56	1/2	5/16	11/16	RUBBER
80022-57	1/2	5/16	1/2	RUBBER
80022-58	1.125	.75	3/16	FIBER
80022-59	.313 +.001 -.000	3/16	1/4	BRONZE
80022-60	.377/.375	.245	5/8	BRONZE
80022-61	1 1/2 x .058		5/16	#1025 STEEL
80022-62	.375 +.000 -.005 x .028		3/8	#1025 STEEL
80022-63	.4415/.4375 x .035	REAM .371/.378	1 1/4	#1025 STEEL
80022-64	5/8	1/2	.125	#1025 STEEL
80022-65	.485 ±.005	.375	11/32	#1025 STEEL
80022-66	5/16 x .035		5/8	#1025 STEEL
80022-67	1/4	.189/.191	1	#1025 STEEL
80022-68	5/16 x .058		7/8	#1025 STEEL
80022-69	9/16	.421/.426	2 1/8	#1025 STEEL

NOTE: 80022-54 REMOVE ALL BURRS
80022-58 O.D. TO BE FREE FIT IN 1 1/4 x .058 TUBE, I.D. TO BE FREE FIT ON 3/4 TUBE.
ALSO SEE DWG'S. 80012, 82732, 36102.

LET	REVISION	DATE	BY
W	-17 CANCELLED	2-7-51	M.G.
V	.4415/.4375 WAS 7/16 & .3065/.3115 WAS 5/16 ON -47; -69 ADD	10-24-50	FCS
U	-68 ADDED	6-17-49	DC
T	-67 ADDED	8-9-48	DC
S	.367/.372 WAS 3/8 FOR -29	6-27-47	RC
R	L DIM. FOR -31 WAS 1.063	9-12-46	J.A.
Q	.065 REMOVED FROM O.D. FOR -20, -21 & -22	11-11-46	I.D.B.
P	I.D. FOR -43 ADDED	10-5-45	L.D.
O	ON -31; .065 REMOVED FROM O.D., .3115/.3065 I.D. ADDED	5-28-45	J.B.M.
N	.377/.375 WAS .376 +.001 -.000 FOR O.D. OF -34, & -60	3-13-45	I.M.M.
M	NOTE REVISED	2-23-45	J.B.W.
L	REDRAWN WITHOUT CHANGE	10-10-44	J.B.W.
K	#1025 STL. WAS #1010 STL. FOR -31	8-19-44	I.D.B.
J	ON -22 MAT'L. SPEC. REVISED	5-13-44	J.B.M.
H	ON -21 & -43 MAT'L SPEC. REVISED	1-10-44	A.I.N.
G	ON -63 .035 ADDED TO O.D. COLUMN	11-8-43	C.E.K.
F	ON -36 .083 ADDED, #1010 STL. WAS #1025	11-8-43	C.E.K.
E	ON -20, -21 & -22 .065 ADDED	11-8-43	C.E.K.
D	ON -6 #4130 STL. WAS #1025 STL.	11-6-43	C.E.K.
C	I.D. OF -20 .365/.375 WAS .370	11-2-43	C.J.H.
B	ON -63, .065 REMOVED, REAM .371/.375 ADDED	9-24-43	C.E.K.
A	REDRAWN & REVISED	8-2-43	P.R.F.

PIPER AIRCRAFT CORP.
LOCK HAVEN PENNA.

BUSHINGS
SHEET II

DRAWN	CHECKED	APPROVED
R. FRANK 8-2-43	C.K. 8-3-43	

80022

A667

This page intentionally left blank.

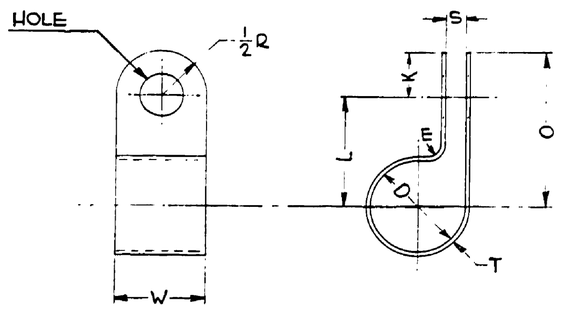

NOTE 1:

WHERE "SEE NOTE 1" IS INDICATED HOLE ON FLAT SIDE IS 3/16 ϕ ON OFFSET SIDE IS 1/8 RADIUS "E" TO BE EQUAL TO "T"

PART NO.	D +0 -.032	S	K	L	HOLE	W	T	O	MATERIAL	REMARKS	DATE ADDED
80032-2	3/8	1/16	1/4	15/32	.141	3/8	.032	—	#1025 STEEL	WAS PART #8070	
80032-3	9/16	1/16	—	—	—	3/8	.032	1 5/16	#1025 STEEL	WAS PART #8058 80032-16 MAY BE USED IN PLACE OF THIS PART IN ALL CASES.	
80032-4	5/8	1/8	1/4	21/32	.191	3/8	.032	—	#1025 STEEL	WAS PART #J2-9023	
80032-5	5/8	1/8	1/2	59/64	.656	1	.045	—	#1025 STEEL	WAS PART #J3-703	
80032-6	3/4	1/8	9/16	63/64	.563	1	.045	—	#1025 STEEL	WAS PART #7191	
80032-7	3/4	1/8	9/16	1 7/64	.656	1	.045	—	#1025 STEEL	WAS PART #5260	
80032-8	7/8	1/8	1/4	21/32	SEE NOTE 1	3/8	.032	—	#1025 STEEL	WAS PART #859	
80032-9	1	1/8	9/16	1 7/64	.563	1	.045	—	#1025 STEEL	WAS PART #7391	
80032-10	1	3/16	3/8	1 3/64	.191	3/4	.045	—	#1025 STEEL	WAS PART #530	
80032-11	1/4	1/16	3/8	3/64	.313	5/8	.045	—	#1025 STEEL	WAS PART #7536	
80032-12	7/8	3/16	1/4	21/32	SEE NOTE 1	3/8	.032	—	#1025 STEEL	WAS PART #5004	
80032-13	5/8	1/8	—	—	—	3/4	.045	1 23/64	#1025 STEEL	WAS PART #8116	
80032-14	3/4	1/8	3/16	39/64	.141	3/8	.045	—	#1025 STEEL	WAS PART #8124	
80032-15	3/4	1/8	1/4	51/64	.191	3/4	.045	—	#1025 STEEL	WAS PART #8131	
80032-16	9/16	1/8	1/4	9/16	.141	3/8	.032	—	#1025 STEEL		
80032-17	7/8	3/16	1/4	21/32	.191	3/8	.032	—	#1025 STEEL		
80032-18	3/8	1/16	3/8	33/64	.250	3/4	.045	—	#1025 STEEL		
80032-19	3/4	3/16	5/16	43/64	.191	5/8	.045	—	#1025 STEEL		
80032-20	5/8	3/16	5/16	13/16	.191	5/8	.045	—	#1025 STEEL		
80032-21	7/8	1/2	1/4	43/64	.166	3/4	.045	—	#1025 STEEL		
80032-22	5/8	1/8	5/16	19/32	.191	1/2	.032	—	#1025 STEEL		
80032-23	⅛	3/16	3/8	1 3/64	.250	3/4	.045	—	#1025 STEEL		
80032-24	1/8	—	3/16	9/32	.141	1/2	.032	—	#1025 STEEL		3-3-42
80032-25	7/16	1/16	1/4	1/2	.166	3/8	.032	—	#1025 STEEL		3-13-42
80032-26	7/8	3/16	5/16	23/32	.250	5/8	.032	—	#1025 STEEL	NEXT ASSY. 71876	3-13-42
80032-27	5/8	1/8	1/4	19/32	.166	3/8	.032	—	#1025 STEEL	NEXT ASSY. 72033	3-24-42
80032-28	5/16	1/16	1/4	7/16	.141	3/8	.032	—	#1025 STEEL		7-8-42
80032-29	3/4	1/8	3/16	19/32	.191	3/8	.032	—	#1025 STEEL		7-22-42
80032-30	5/8	1/8	1/4	27/32	.191	1/2	.032	—	#1025 STEEL	DIM'S. CHANGED 12-2-42	9-21-42
80032-31	5/16	—	1/4	3/8	.098	3/8	.032	—	#1025 STEEL		11-14-42
80032-32	3/16	1/16	3/8	23/64	.141	5/8	.045	—	#1025 STEEL		11-14-42
80032-33	3/4	3/16	1/4	23/32	.191	1/2	.032	—	#1025 STEEL		11-21-42
80032-34	3/16	1/16	3/16	7/16	.191	5/8	.032	—	#1025 STEEL	WAS 80032-30	12-2-42
80032-35	3/16	1/8	3/16	5/16	.113	3/8	.032	—	#1025 STEEL		12-15-42
80032-36	3/4	1/8	5/16	39/64	.166	3/8	.045	—	#1025 STEEL		3-17-43
80032-37	3/16	1/16	1/4	7/16	.166	1/2	.032	11/16	#1025 STEEL		
80032-38	7/8	3/16	3/8	27/32	.191	3/4	.032	1 7/32	#1025 STEEL		
80032-39	7/8	1/8	5/16	7/8	.191	5/8	.045	—	#1025 STEEL		
80032-40	1	1/8	1/2	1 1/64	.656	1	.045	—	#1025 STEEL		
80032-41	1	1/8	3/16	27/32	.166	5/8	.032	—	#1025 STEEL		
80032-42	7/8	1/16	3/16	11/16	.156	3/8	.032	—	3S-½H ALUM.		
80032-43	5/8	—	1/4	19/32	.166	3/8	.032	—	#1025 STEEL		
80032-44	3	1/8	5/16	1 23/32	.166	5/8	.032	2 5/32	3S-½H. ALUM.		
80032-45	3/4	1/8	9/16	1 7/64	.438	1	.045	—	#1025 STEEL		
80032-46	1/2	1/8	1/4	15/32	.166	3/8	.032	—	#1025 STEEL		
80032-47	3/4	1/8	1/4	19/64	.191	1/2	.032	—	COPPER	WAS 66024 CODE NO. 126 622	
80032-48	3/16	1/16	3/16	5/16	.141	3/8	.032	—	#1025 STEEL	WAS 6-5050-7	
80032-49	5/16	1/16	5/16	3/4	.250	5/8	.032	—	#1025 STEEL		
80032-50	3/8	1/16	3/16	7/16	.141	5/16	.032	—	3S-½H. ALUM.		
80032-51	1/4	1/8	5/16	5/8	.281	5/8	.032	—	#1025 STEEL		
80032-52	5/8	3/16	5/16	5/8	.191	1/2	.045	—	#1025 STEEL		
80032-53	1/4	1/16	7/32	5/8	.281	5/8	.032	—	#1025 STEEL		
80032-54	1/2	1/16	3/16	9/16	.141	5/16	.032	—	3S-½H. ALUM.		

LET.	REVISION	DATE	BY
V	REDRAWN & REVISED	6-28-51	M.G.
U	-54 ADDED	3-26-51	I.E.M.
T	-53 ADDED	3-6-50	C.K.
S	-52 ADDED, ¼D FOR -51 WAS 5/16	2-1-50	C.K.
R	-50 & -51 ADDED	11-3-49	K.R.D.
Q	DIM. REV. FOR -49	9-25-47	H.K.
P	-49 ADDED	5-14-47	I.M.M.

LET.	REVISION	DATE	BY
O	-48 ADDED	2-28-47	H.M.Z.
N	-47 ADDED	2-6-47	B.C.
M	-46 ADDED	1-28-47	L.R.
L	NOTE 1 REV., .438 HOLE WAS .750 DIA.	2-1-46	E.L.N.
K	-45 ADDED	12-11-45	I.M.M.
J	-44 ADDED	10-12-45	D.A.W.
H	-43 ADDED	7-5-45	I.M.M.
G	L DIM. FOR -41 27/32 WAS 11/32	7-5-45	I.M.M.
F	T DIM. FOR -42, .032 WAS .016	5-22-45	E.L.N.
E	-42 ADDED	3-5-45	J.B.M.
D	-37-38-39-40-41 ADDED	11-7-44	J.B.W.
C	L DIM. FOR -20 15/16 WAS 47/64	7-13-44	I.M.M.
B	REDRAWN & REVISED	2-8-44	I.M.M.

THIS DRAWING IS THE PROPERTY OF THE PIPER AIRCRAFT CORP. AND ITS POSSESSION BY UNAUTHORIZED PERSONS SHALL NOT BE CONSTRUED AS PERMISSION TO REPRODUCE FOR SALE, IN WHOLE OR IN PART, ANY DEVICES SHOWN THEREON

MODEL	PER PLANE	NEXT ASSEMBLY	SUPERSEDES	SUP. BY

PIPER AIRCRAFT CORP.
LOCK HAVEN, PENNA.

PART NO. | NO. REQ. | MATERIAL

SCALE | TOTAL WT.—LBS.

FINISH—PIPER SPECIFICATION #10

MANUFACTURING PRACTICES—PIPER SPECIFICATION #9

CLAMPS—OFFSET

DRAFTSMAN	CHECKER	STANDARDS
M.W.G. 6-28-51	I.E.M. 6-29-51	

80032

A8 16

8/6

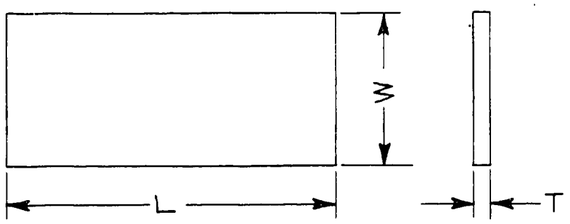

PART No.	L	W	T	MAT'L.	REMARKS
80042-2	1 1/8	3/8	.062	#1025 STEEL	WAS 1016
80042-3	6	2 1/2	18 GA. .040	52S-1/2 H. ALUM.	WAS 1098
80042-4	2	1	.062	#1025 STEEL	
80042-5	5 1/4	1 3/8	18 GA. .040	52S-1/2 H. ALUM.	WAS 680
80042-6	4 1/4	1 3/8	18 GA. .040	52S-1/2 H. ALUM.	WAS 681
80042-7	3	1	.062	#1025 STEEL	WAS 2002
80042-8	3 3/4	3 1/2	.045	#1025 STEEL	WAS 497
80042-9	7/8	5/8	.045	#1025 STEEL	WAS J3-272
80042-10	3 3/8	1	26 GA. .016	3S-H ALUM.	WAS E2-556
80042-11	3 7/8	5/8	.032	STAIN. STEEL	WAS 80911-2
80042-12	2	1 1/8	.062	#1025 STEEL	WAS 11851-2
80042-13	2 1/2	2 1/2	.020	H.R. STEEL	WAS 7058
80042-14	1/2	5/16	.125	#1025 STEEL	WAS 2207
80042-15	3/8	5/16	.062	#1025 STEEL	WAS E2-176
80042-16	3/4	5/16	.062	#1025 STEEL	WAS E2-51
80042-17	1/2	1/8	.125	#1025 STEEL	WAS 2378
80042-18	1 1/2	1/2	.032	#1025 STEEL	WAS J3-256
80042-19	5/8	1/2	.062	#1025 STEEL	WAS J2-9056
80042-20	2	5/8	.032	#18-8 ST. STL.	WAS 7328 (TYPE 347, U.T.S. 80,000-90,000 P.S.I.)
80042-21	1 1/2	3/8	.062	#1025 STEEL	WAS 2612
80042-22	2 3/4	1 3/16	.062	#1025 STEEL	
80042-23	3/4	1/2	.125	#1025 STEEL	
80042-24	3/8	5/16	.125	#1025 STEEL	

PART No.	L	W	T	MAT'L.	REMARKS
80042-25	2 3/4	9/16	.062	#1025 STEEL	
80042-26	3/4	1/4	.062	#1025 STEEL	WAS 8173
80042-27	3/4	1/8	.125	#1025 STEEL	
80042-28	1 11/16	27/32	.032	#1025 STEEL	
80042-29	2	1 3/4	.062	#1025 STEEL	
80042-30	4	1/2	.032	TYPE 347 ST. STEEL ANNEALED 2D FINISH	
80042-31	3 7/8	1/2	.032	TYPE 347 ST. STEEL ANNEALED 2D FINISH	
80042-32	4 5/8	1/2	.032	TYPE 347 ST. STEEL ANNEALED 2D FINISH	
80042-33	1 7/16	1	.032	TYPE 347 ST. STEEL ANNEALED 2D FINISH	
80042-34	1/2	1/4	.125	#1025 STEEL	
80042-35	17	1/2	.025	3S-1/2 H. ALUM.	
80042-36	15 3/8	1/2	.025	3S-1/2 H. ALUM.	
80042-37	2 1/4	1 1/2	.020	H.R. STEEL	
80042-38	1	1	.032	3S-1/2 H. ALUM.	
80042-39	23 1/2	1	.062	#1025 STEEL	
80042-40	14	3/4	.030	PYRALIN	
80042-41	11	1/2	.030	PYRALIN	
80042-42	20	1/2	.030	PYRALIN	
80042-43	5 3/4	1/2	.030	PYRALIN	
80042-44	7/16	1/4	.095	#1025 STEEL	
80042-45	5/8	1/4	.032	#1025 STEEL	
80042-46	5/8	5/16	.062	#1025 STEEL	
80042-47	13 1/2	1/2	.032	#1025 STEEL	
80042-48	13 3/4	1/2	.032	#1025 STEEL	
80042-49	14 1/4	1/2	.032	#1025 STEEL	
80042-50	16	5/8	.045	#1025 STEEL	
80042-51	3/4	1/2	.062	#1025 STEEL	
80042-52	2 3/4	3/8	.062	HARD FIBRE	
80042-53	1 5/8	3/8	.062	HARD FIBRE	
80042-54	2	1/2	.125	PLEXIGLAS	
80042-55	33 3/4	3/8	.025	3S-1/2 H. ALUM	
80042-56	29 3/4	3/8	.025	3S-1/2 H. ALUM	

SEE ALSO DWG. 11473

LIMITS, SHOP PRACTICES AND FINISH, UNLESS OTHERWISE NOTED, TO BE IN ACCORDANCE WITH PIPER SPECIFICATIONS #9 AND #10.

LET	REVISION	DATE	BY
W	-54, -55 & -56 ADDED	10-1-47	R.M.
V	-52 & -53 ADDED	5-16-47	I.M.M.
U	-51 ADDED	5-5-47	I.M.M.
T	-47-48-49 & -50 ADDED	5-27-46	H.M.Z.
S	-46 ADDED	5-13-46	B.C.
R	-45 ADDED	4-25-46	H.M.Z.
Q	-44 ADDED	2-5-46	H.M.Z.
P	-41, -42, -43 ADDED	11-6-45	J.D.B.
O	-40 ADDED	9-28-45	C.E.K.
N	-39 ADDED	9-6-45	E.L.N.
M	ON -38 "W" 1 WAS 1/2	5-28-45	J.B.M.
L	-38 ADDED	4-5-45	H.M.Z.
K	REDRAWN WITHOUT CHANGE	3-19-45	R.D.R.
J	-37 ADDED	2-27-45	H.M.Z.
H	MAT'L. SPEC. REVISED FOR -35-36	2-27-45	H.M.Z.
G	-34, -35, -36 ADDED	2-8-45	J.B.M.
F	-28, -29, -30, -31, -32, -33 ADDED	2-6-45	H.M.Z.
E	-27 ADDED	12-29-44	J.B.W.
D	-26 ADDED	9-25-44	E.L.N.
C	-25 ADDED	8-2-44	I.D.B.
B	-24 ADDED	6-1-43	L.E.K.
A	-23 ADDED	7-21-42	R.T.M.

MODEL	PER SHIP	NEXT ASSEMBLY	SUPERSEDES	SUP. BY

PIPER AIRCRAFT CORP.
LOCK HAVEN, PENNA.

PART No.	NO. REQ.	MATERIAL

SCALE — TOTAL WT. - LBS.
FINISH

PLATES - RECTANGULAR

V. F.	R.R.B.		
9-27-41	9-22-41		
DRAWN	CHECKED	APPROVED	

80042

668

A668

WAS 3018
D8010-A

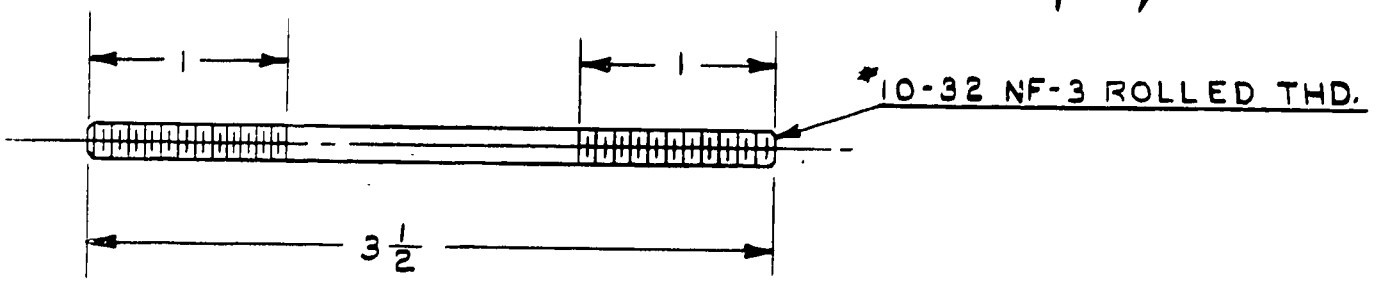

LET	REVISION	DATE	BY
K	REDRAWN WITHOUT CHANGE	5-25-51	I.M.M.
J	THD. & MATL. SPEC. REV.	6-7-50	C.K.
H	J5C MODEL REF. CANCELLED	3-20-46	C.L.W.
G	J5C MODEL REF. REINSTATED	12-4-45	R.T.M.
F	J5C MODEL REF. CANC.	11-15-45	I.M.M.
E	NEXT ASSY. 10185 WAS 12164, 10994	10-11-45	R.T.M.
D	J5C 4 PER SHIP WAS 2 OR 4	10-11-45	R.T.M.
C	L-14 NA. 90600 WAS 90400 & 90401	6-14-45	J.B.M.
B	L-14 MODEL REF. ADDED	3-21-45	I.D.B.
A	THD. & MAT'L. SPEC. REV.	1-25-44	A.I.N.

MODEL	PER PLANE	NEXT ASSEMBLY	SUPERSEDES	SUP. BY
J5C	4	10185		
L-14	4	90600		
J5	2	12164		
HE-1	2	12164		
J5D	2 or 4	12164, 10994		
J4	2	10994		

THIS DRAWING IS THE PROPERTY OF THE PIPER AIRCRAFT CORP. AND ITS POSSESSION BY UNAUTHORIZED PERSONS SHALL NOT BE CONSTRUED AS PERMISSION TO REPRODUCE FOR SALE IN WHOLE OR IN PART ANY DEVICES SHOWN THEREON.

PIPER AIRCRAFT CORP.
LOCK HAVEN, PENNA.

PART NO.	NO. REQ.	SIZE	DESCRIPTION / MATERIAL
		.1695 × 3 1/2	STAINLESS STEEL, TYPE 302 W. MIN. U.T.S. 140,000 P.S.I.

SCALE FULL SIZE | TOTAL WT.—LBS.
FINISH—PIPER SPECIFICATION # 10
MANUFACTURING PRACTICES—PIPER SPECIFICATION # 9

STUD

DRAFTSMAN	CHECKER	STANDARDS
M. H. 2-19-41	R. R. R. 7-18-41	

80111

363

A363

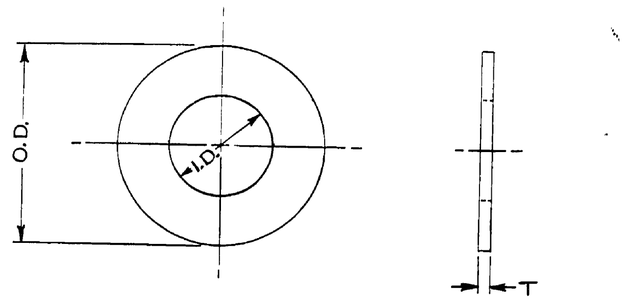

PART Nº	O.D.	I.D.	T	MATERIAL	REMARKS
80122-2	2 1/2	7/8	.012	#18-8 ST. STEEL	WAS 7687
80122-3	2 1/2	7/8	.012	#26GA. TERNEPLATE	WAS 7669
80122-4	3/4	#27 DRILL	.062	#1025 STEEL	WAS 109
80122-5	3/8	.166	.032	#1025 STEEL	WAS 4068
80122-6	1/2	#9 DRILL	.125	#1025 STEEL	WAS 562
80122-7	1/2	.191	.045	#1025 STEEL	WAS 450
80122-8	1/2	.191	.095	#1025 STEEL	WAS 4296
80122-9	3/4	.166	.032	#1025 STEEL	WAS 2131
80122-10	3/4	.191	.045	#1025 STEEL	WAS 110
80122-11	3/4	.191	.062	#1025 STEEL	WAS 448
80122-12	31/32	#11 DRILL	.095	#1025 STEEL	WAS 107
80122-13	1/2	7/32	.045	#1025 STEEL	PURCH.-CAD. PLATED-WAS 849
80122-14	3/4	.246	.045	#1025 STEEL	WAS 4077
80122-15	1	.246	.095	#1025 STEEL	WAS 424
80122-16	7/16	.250	.045 .035	#1025 STEEL	PURCH. - WAS E2-289
80122-17	9/16	.250	.062	#1025 STEEL	WAS 449
80122-18	5/8	.266	.032	#1025 STEEL	WAS 828 & J2-840
80122-19	3/4	.250	.045	#1025 STEEL	WAS 425
80122-20	3/4	.266	.062	#1025 STEEL	PURCH.- WAS J2-308
80122-21	3/4	1/4	.125	#1025 STEEL	WAS 590
80122-22	7/8	1/4	.045	#1025 STEEL	WAS 226
80122-23	1	1/4	.062	#1025 STEEL	WAS J3-2062
80122-24	3/4	.328	.062	#1025 STEEL	PURCH.-WAS E2-800
80122-25	7/8	5/16	.062	#1025 STEEL	WAS 4063
80122-26	9/16	.376 .385	.062	#1025 STEEL	WAS 551
80122-27	3/4	3/8	.062	#1025 STEEL	WAS 881
80122-28	1	.372 .375	.020	#1010 STEEL	CAD. PLATED-WAS 1180
80122-29	5/8	7/16	.125	#1025 STEEL	WAS 865
80122-30	7/8	1/2	.062	#1025 STEEL	WAS 368
80122-31	1 1/4	.516	.125	#1025 STEEL	PURCH.- WAS 2109
80122-32	7/8	9/16	.035	#1025 STEEL	WAS 876
80122-33	1 1/4	5/8	.062	#1025 STEEL	WAS 367
80122-34	1 3/8	5/8	.125	#1025 STEEL	PURCH.-WAS J2-850

PART Nº	O.D.	I.D.	T	MATERIAL	REMARKS
80122-35	1 1/4	3/4	.062	#1025 STEEL	WAS 819
80122-36	1 3/8	1 7/32	.062	#1025 STEEL	WAS 880
80122-37	2 1/2	1	.012	TYPE 302 ST. STEEL ANNEALED 2D FINISH	WAS 70031-2 & 7433
80122-38	4 1/2	2 3/16	.012	TYPE 302 ST. STEEL ANNEALED 2D FINISH	WAS 70031-3 & 7431
80122-39	1.64	.876 .881	.125	#1025 STEEL	FREE FIT IN 1 3/4 x .049 TUBE - WAS 30221
80122-40	1/2	3/16	.032	#1025 STEEL	WAS J3-802
80122-41	1	.375 .385	.095	#1025 STEEL	WAS E2-408
80122-42	1 7/8	1 5/16	.095	SHEET CORK	WAS 7608
80122-43	1 1/2	.437 .447	.062	FIBRE	PURCH. - WAS J2-885
80122-44	1/2	.170	.045	#1025 STEEL	
80122-45	3	2 1/8	.032	TYPE 347 ST. STEEL ANNEALED 2D. FINISH	WAS 7448
80122-46	3	2 1/16	.032	#18-8 ST. STEEL	WAS 7097
80122-47	2 7/16	2 1/8	.032	VELLUMOID	WAS 7008
80122-48	3 1/2	1 7/8	.095	SOFT BLACK RUBBER	PURCH.-GASOLINE RESIST.-WAS 620
80122-49	4 1/2	3 9/16	.050	PYRALIN	WAS J3-126 & 80531-2
80122-50	3 1/2	2 1/4	.030 .035	PYRALIN	WAS 687 & 80531-3
80122-51	1 1/2	3/4	.030 .035	PYRALIN	WAS J3-909 & 80531-4
80122-52	1 3/8	7/16	.030 .035	PYRALIN	WAS 62 & 80531-5
80122-53	3/4	1/4	.030 .035	PYRALIN	WAS J2-9001 & 80531-6
80122-54	2 1/16	31/32	.030 .035	PYRALIN	WAS 1078 & 80531-8

PART Nº	O.D.	I.D.	T	MATERIAL	REMARKS

SEE ALSO DWGS. 85012 & 81342.

THIS DRAWING IS THE PROPERTY OF THE PIPER AIRCRAFT CORP. AND ITS POSSESSION BY UNAUTHORIZED PERSONS SHALL NOT BE CONSTRUED AS PERMISSION TO REPRODUCE FOR SALE, IN WHOLE OR IN PART, ANY DEVICES SHOWN THEREON

LET.	REVISION	DATE	BY
M	REDRAWN & REVISED	6-28-51	I.E.M.

MODEL	PER PLANE	NEXT ASSEMBLY	SUPERSEDES	SUP. BY

PIPER AIRCRAFT CORP.
LOCK HAVEN, PENNA.

NOTED

PART No. | NO. REQ. | MATERIAL

SCALE | TOTAL WT.—LBS.

FINISH—PIPER SPECIFICATION #10

MANUFACTURING PRACTICES—PIPER SPECIFICATION #9

WASHERS (SHEET I)

DRAFTSMAN	CHECKER	STANDARDS
I.E.M. 5-28-51	J.M.M. 6-29-51	

80122

817

A817

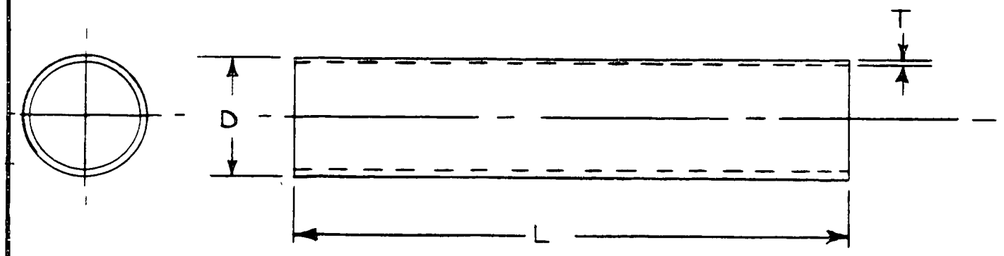

PART NO.	L	D	T	MATERIAL	REMARKS
80132-2	9	.667 .660	.035	#4130 STEEL	
80132-3	7	.667 .660	.035	#4130 STEEL	WAS PART #444 & 1069
80132-4	THIS PART OBSOLETE. SEE DWG. SAME NO. DATED 8-27-41				
80132-5	THIS PART OBSOLETE. SEE DWG. SAME NO. DATED 8-27-41				
80132-6	4	51/64	.035	#4130 STEEL	WAS PART #J2-2062
80132-7	THIS PART OBSOLETE. SEE DWG. SAME NO. DATED 8-27-41				
80132-8	27 3/8	5/8	.028	#1025 STEEL	WAS PART #4308
80132-9	4	23/32	.028	#1025 STEEL	WAS PART #J2-223
80132-10	8	.747 .750	.049	#4130 STEEL	POLISH OUTSIDE TO REMOVE SCALE. WAS PART #J3-516
80132-11	16	.942 .937	.035	#4130 STEEL	WAS PART #4104
80132-12	THIS PART OBSOLETE. SEE DWG. SAME NO. DATED 8-27-41				
80132-13	THIS PART OBSOLETE. SEE DWG. SAME NO. DATED 8-27-41				
80132-14	4	3/4	.035	#1025 STEEL	WAS PART #J3-41
80132-15	9 1/4	1 1/4	.058	#4130 STEEL	
80132-16	10 1/8	1	.028	#4130 STEEL SEAMLESS TUBE	I.D. MUST BE .942 .946 WAS PART #4097
80132-17	3 1/2	5/8	.035	#1025 STEEL	WAS PART #J3-44
80132-18	4 3/4	3/4	.035	#1025 STEEL	WAS PART 4183
80132-19	29 15/16	5/8	.028	#1025 STEEL	WAS PART E2-17
80132-20	7	51/64	.035	#4130 STEEL	WAS PART 2564
80132-21	3 1/2	.867 .865	.035	#4130 STEEL	WAS PART J2-2080
80132-22	4	1.055 1.045	.035	#4130 STEEL	WAS PART 30382-3
80132-23	7	1	.049	#4130 STEEL	WAS PART 2546
80132-24	17 1/2	5/8	.032	2S ALUM. OR COPPER	WAS PART 7119

PART NO.	L	D	T	MATERIAL	REMARKS	DATE ADDED
80132-25	8 3/8	1 1/2	.032	#1010 STEEL	WAS PART #7322	
80132-26	7 1/2	1 3/16	.035	#1025 STEEL	WAS PART #5166	
80132-27	7 1/2	51/64	.035	#1025 STEEL	WAS PART #5378	
80132-28	15 5/8	15/16	.035	#4130 STEEL	WAS PART #5172	2-4-42
80132-29	3 3/8	1 5/8	.065	#1025 STEEL	WAS PART #J2-370	2-16-42
80132-30	6	5/16	.028	#1025 STEEL		3-26-42
80132-31	1 3/8	3/8	.032	COPPER	WAS PART 22132-6	5-7-42
80132-32	33 3/8	1 3/8	.058	#4130 STEEL	DRILL HOLES PER DWG. 31152. REMOVE ALL BURRS	6-12-42
80132-33	3	1 1/2	.058	#4130 STEEL	REMOVE ALL BURRS	6-12-42
80132-34	32 1/8	5/8	.028	#1025 STEEL		6-25-42
80132-35	THIS PART OBSOLETE. SEE DWG. SAME NO. DATED 8-27-41					7-1-42
80132-36	1 3/4	1/2	.028	#1025 STEEL		7-1-42
80132-37	4 1/2	5/16	.028	#1025 STEEL	REMOVE ALL BURRS	7-24-42
80132-38	2 1/2	1 1/2	.058	#4130 STEEL	REMOVE ALL BURRS	8-4-42
80132-39	3 3/4	3/4	.035	#1025 STEEL		9-16-42
80132-40	29 7/8	5/8	.028	#1025 STEEL		10-8-42
80132-41	4 3/4	7/8	.049	#4130 STEEL		5-18-43
80132-42	27	5/8	.028	#1025 STEEL		8-11-43
80132-43	10 1/8	3/4	.035	#1025 STEEL	WAS PART #J3-405	8-2-44
80132-44	17 13/32	2	.035	#4130 SS TUBE	I.D. MUST BE .927 .935	
80132-45	1 3/4	1 7/8	.049	#4130 SS TUBE		
80132-46	2 5/16	3/4	.035	#4130 STEEL		
80132-47	12 1/8	1/2	.028	#1025 STEEL		
80132-48	15 1/8	3/4	.028	#1025 STEEL		
80132-49	16 3/8	3/4	.028	#1025 STEEL		
80132-50	3 1/2	7/8	.058	#4130 STEEL		
80132-51	4 1/2	1 1/8	.065	#4130 STEEL		
80132-52	10 1/8	7/8	.058	#4130 STEEL		
80132-53	6 5/8	7/8	.058	#4130 STEEL		
80132-54	3 1/8	3/4	.058	#1025 STEEL		
80132-55	9 15/16	3/4	.049	#4130 STEEL		
80132-56	7 3/8	3/4	.049	#4130 STEEL		
80132-57	7 5/8	.747 .750	.049	#4130 STEEL	POLISH OUTSIDE TO REMOVE SCALE	

NOTE:

SEE ALSO DWG. 86062.

LIMITS, SHOP PRACTICES AND FINISH. UNLESS OTHERWISE NOTED, TO BE IN ACCORDANCE WITH PIPER SPECIFICATIONS #9 AND #10.

LET.	REVISION	DATE	BY
AB	-57 ADDED	1-5-50	K.D.
AA	ON-56 L 7 3/8 WAS 7 5/8	3-22-45	I.D.B.
Z	ON -51 T .065 WAS .049	3-22-45	I.D.B.
Y	ON-55 & -56 T .049 WAS .065	3-12-45	H.M.Z.
X	NOTE ADDED	2-5-45	J.B.W.
W	-50-51-52-53-54-55 & -56 ADDED	1-15-45	E.L.H.
V	ON-16 I.D. .942 .946 WAS .945 .950	12-28-44	I.M.
U	ON-11 D .942 .937 WAS .945 .940	12-28-44	I.M.
T	ON-10 D .747 .748 WAS 3/4	12-28-44	I.M.
S	I.D. ADDED FOR -44	12-13-44	J.B.W.
R	-47, -48, -49 ADDED	12-13-44	J.B.W.
Q	REDRAWN WITHOUT CHANGE	10-9-44	H.M.Z.
P	-44, -45, -46 ADDED	9-28-44	J.B.W.
O	-43 ADDED	9-2-44	I.D.B.
N	D FOR -6, 5/16 WAS 21/32	2-25-44	V.C.
M	ALT. MAT'L. ADDED FOR -24	2-5-44	I.D.B.
L	MAT'L. SPEC. REV. FOR -16	1-7-44	J.B.M.
K	D FOR -20 WAS 25/32	10-28-43	L.R.
J	80132-42 ADDED	8-11-43	R.R.F.
H	REDRAWN & REVISED	8-4-43	J.E.C.

MODEL	PER SHIP	NEXT ASSEMBLY	SUPERSEDES	SUP. BY

PIPER AIRCRAFT CORP.
LOCK HAVEN, PENNA.

PART NO.	NO. REQ.	NOTED
		MATERIAL
SCALE		TOTAL WT. - LBS.
FINISH		

TUBES

SHEET NO. 1

DRAWN	CHECKED	APPROVED
CROWLEY 8-4-43	P. R. R. 8-5-43	

80132

669

A669

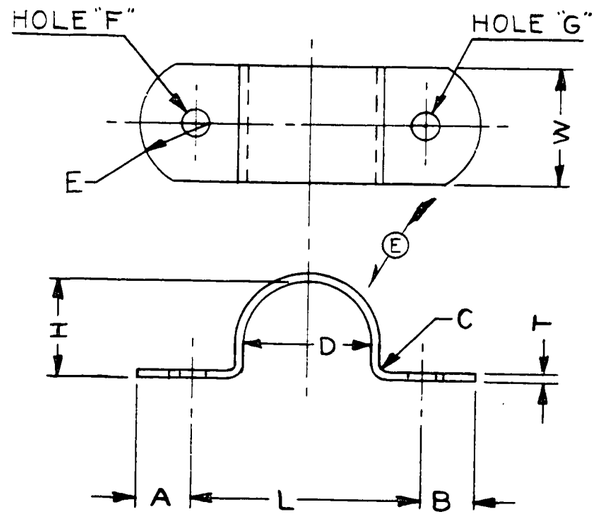

PART NO.	A	L	B	D	H	W	C	E	T	HOLE F	HOLE G	MATERIAL	REMARKS
80222-2	3/16	1	3/16	5/8	9/16	5/8	1/16	1/2	.045	.191	.191	*1025 STL	WAS 890
80222-3	3/8	1 3/8	3/8	.626/.625	.615/.625	5/8	1/16	1/2	.062	.189/.191	.189/.191	*1025 STL.	WAS E2-459
80222-4	5/16	1 11/16	5/16	3/4	23/32	3/4	1/8	1/2	.095	.191	.191	*1025 STL.	WAS 474
80222-5	5/16	1 11/16	5/16	7/8	27/32	3/4	1/8	1/2	.095	.191	.191	*1025 STL.	WAS 473
80222-6	5/16	1 15/16	5/16	1.000	15/16	1	1/16	1/2	.062	.191	.191	*1025 STL.	WAS J3-605
80222-7	1/2	2 1/2	1/2	1 3/8	1 7/16	1 1/4	1/16	5/8	.062	.3115/.3135	.3115/.3135	*1025 STL.	
80222-8	3/16	2	3/16	1 5/8	3/4	3/8	1/32	1/2	.032	.129	.129	*1025 STL.	
80222-9	3/16	1	3/16	3/8	5/16	3/8	1/32	1/2	.032	.141	.141	*1025 STL.	
80222-10	1/8	1/2	1/8	1/8	3/16	1/2	1/32		.040	.125	.125	3S-1/2H. ALUM.	
80222-11	1/4	1 1/2	1/4	1	1	3/4	1/16	1/2	.020	.104	.104	3S-1/2H. ALUM.	
80222-12	1/4	1 3/8	1/4	7/8	7/8	3/4	1/16	1/2	.020	.104	.104	3S-1/2H. ALUM.	
80222-13	1/4	1 1/8	1/4	7/16	3/8	3/8	1/32	1/2	.032	.141	.141	*1025 STL.	
80222-14	1/4	3	1/4	2 1/8	2 1/8	1/2	1/16	3/8	.032	.101	.101	*1025 STL.	
80222-15	5/16	1 7/8	5/16	1	15/16	3/4	1/16	1/2	.045	.191	.191	*1025 STL.	USED WITH SERVICE BULLETIN * 72
80222-16	5/16	2	5/16	1 1/8	1 1/16	3/4	1/16	1/2	.045	.191	.191	*1025 STL.	
80222-17	5/16	2 1/8	5/16	1 1/4	1 3/16	3/4	1/16	1/2	.045	.191	.191	*1025 STL.	
80222-18	3/8	1 1/2	3/8	3/4	3/4	5/8	1/16	1/2	.062	.191	.191	*1025 STL.	
80222-19	5/16	1 15/16	5/16	3/4	3/4	1	1/8	5/8	.062	.191	.191	*1025 STL.	
80222-20	3/8	1 7/8	3/8	7/8	7/8	3/4	1/16	1/2	.062	.191	.191	*1025 STL.	
80222-21	3/8	1 7/8	3/8	3/4	3/4	3/4	1/16	1/2	.062	.191	.191	*1025 STL.	
80222-22	3/8	1 3/8	3/8	3/4	3/4	3/4	1/16	1/2	.062	.191	.191	*1025 STL.	
80222-23	3/8	1 1/2	3/8	7/8	7/8	3/4	1/16	1/2	.062	.191	.191	*1025 STL.	
80222-24	3/8	1 1/2	3/8	3/4	3/4	3/4	1/16	1/2	.062	.191	.191	*1025 STL.	
80222-25	5/16	1 3/16	5/16	5/8	5/8	1/2	1/32	1/2	.032	.166	.166	*1025 STL.	
80222-26	1/4	1 1/4	1/4	9/16	3/8	3/8	1/32	1/2	.032	.141	.141	*1025 STL.	
80222-27	1/4	2 7/8	1/4	2 1/8	2 1/8	1/2	1/16	3/8	.032	.141	.141	*1025 STL.	

LET	REVISION	DATE	BY
S	REDRAWN WITHOUT CHANGE	6-6-51	C.K.
R	-27 ADDED	3-1-51	L.E.M.
Q	-26 ADDED	1-26-50	J.O.
P	-25 ADDED	10-13-49	R.M.
O	-24 ADDED	5-13-48	H.R.K.
N	-23 ADDED	4-20-48	R.C.
M	-22 ADDED	1-26-48	R.M.
L	ON-2 L T.062 WAS.045	7-5-45	I.M.M.
K	-19-20-21 ADDED	2-9-45	I.M.M.
J	-18 ADDED	12-29-44	I.M.M.
H	3115/3135 WAS 5/16 FOR -7	2-11-44	V.C.
G	-15-16 & -17 ADDED	10-18-43	C.E.K.
F	ON-3 D H F G & ON-6 D REVISED	7-2-43	C.E.K.
E	'R' REMOVED; 'D' ADDED	7-2-43	C.E.K.
D	3S 1/2 H. ALUM. WAS 3S H ALUM.	2-16-43	R.E.T.
C	-14 ADDED	12-14-42	J.S.B.
B	80222-13 ADDED	6-10-42	H.N.
A	-11 & -12 ADDED	5-6-42	R.M.

THIS DRAWING IS THE PROPERTY OF THE PIPER AIRCRAFT CORP. AND ITS POSSESSION BY UNAUTHORIZED PERSONS SHALL NOT BE CONSTRUED AS PERMISSION TO REPRODUCE FOR SALE, IN WHOLE OR IN PART, ANY DEVICES SHOWN THEREON

MODEL	PER PLANE	NEXT ASSEMBLY	SUPERSEDES	SUP. BY

PIPER AIRCRAFT CORP.
LOCK HAVEN, PENNA.

NOTED

PART No.	No. REQ.	MATERIAL

SCALE — TOTAL WT.—LBS.

FINISH—PIPER SPECIFICATION #10

MANUFACTURING PRACTICES—PIPER SPECIFICATION #9

CLAMPS—OPEN

R. C. M.	R. R. B.		
8-22-41	8-25-41		
DRAFTSMAN	CHECKER	STANDARDS	**80222**

670

A670

A B

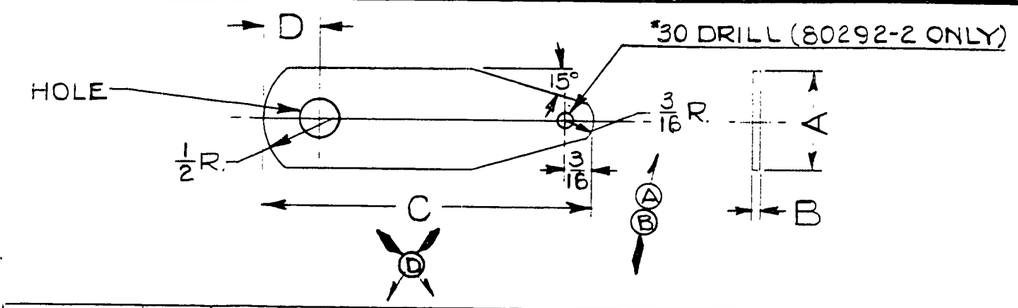

PART NO.	A	B	C	HOLE	D	MAT'L.	REMARKS
80292-2	5/8	.032	1	.250	.250	#1025 STEEL	WAS PART #7110
80292-3	5/8	.062	1 1/2	.191	.375	#1025 STEEL	WAS PART #4078
80292-4	5/8	.062	1 1/2	.246	.375	#1025 STEEL	WAS PART #4032
80292-5	5/8	.045	2	.250	.375	#1025 STEEL	WAS PART #J3-411
80292-6	3/4	.045	1 3/4	.250	.375	#1025 STEEL	WAS PART #762
80292-7	3/4	.045	1 15/16	.191	.375	#1025 STEEL	WAS PART #455
80292-8	3/4	.095	2 5/16	.191	.375	#1025 STEEL	WAS PART #J2-2001
80292-9	3/4	.045	2 5/8	.246	.375	#1025 STEEL	WAS PART #426
80292-10	3/4	.062	2 5/8	.246	.375	#1025 STEEL	WAS PART #421
80292-11	3/4	.062	2 3/4	.221	.375	#1025 STEEL	WAS PART #E2-419
80292-12	7/8	.062	2	.500	.500	#1025 STEEL	WAS PART #385
~~80292-13~~	3/4	.062	1 7/8	.250	.375	#1025 STEEL	WAS PART #3014
80292-14	3/4	.062	2 1/4	.241 / .246	.500	#1025 STEEL	WAS PART #3024
80292-15	3/4	.095	2 9/16	.191	.375	#1025 STEEL	WAS PART #2453
80292-16	3/4	.062	2 1/4	.313	.500	#1025 STEEL	
80292-17	1	.062	2 1/2	.302	.500	#1025 STEEL	

NOTE: A PART NO. CROSSED OUT IN THIS MANNER ~~00000~~ INDICATES AN OBSOLETE PART.

LET	REVISION	DATE	BY
G	REDRAWN WITHOUT CHANGE	6-22-51	I.E.M.
F	-14 .241 .246 HOLE WAS .250 HOLE FOR -14	1-10-50	K.D.
E	-17 ADDED	4-20-48	R.C.
D	HOLE & "D" DIM. CHANGED TO DEC.	5-5-43	C.E.K.
C	-16 ADDED	3-11-43	R.E.T.
B	3/16 R. WAS 5/32 R.	12-16-42	J.S.B.
A	5/32 R. WAS SQ. CORNERS	12-8-41	W.O.

MODEL	PER PLANE	NEXT ASSEMBLY	SUPERSEDES	SUP. BY
			D884-B	

THIS DRAWING IS THE PROPERTY OF THE PIPER AIRCRAFT CORP. AND ITS POSSESSION BY UNAUTHORIZED PERSONS SHALL NOT BE CONSTRUED AS PERMISSION TO REPRODUCE FOR SALE IN WHOLE OR IN PART ANY DEVICES SHOWN THEREON.

PIPER AIRCRAFT CORP.
LOCK HAVEN, PENNA.

PART NO.	NO. REQ.	NOTED
		MATERIAL
SCALE		TOTAL WT.—LBS.

FINISH—PIPER SPECIFICATION # 10

MANUFACTURING PRACTICES—PIPER SPECIFICATION # 9

PLATES-REINFORCEMENT

DRAFTSMAN	CHECKER	STANDARDS
V.F. 6-18-41	R.R.B 6-20-41	

80292

671

A671

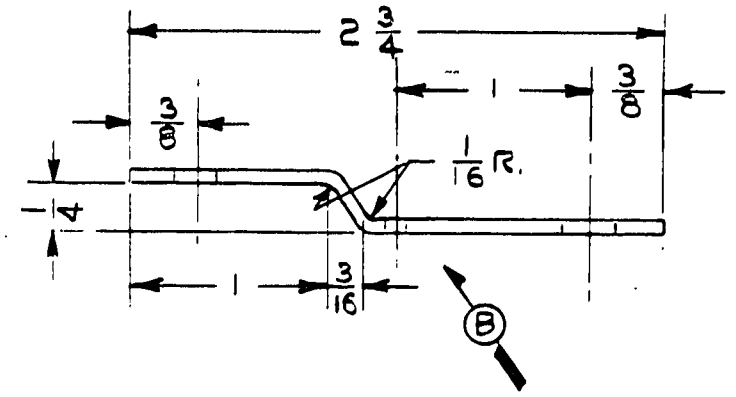

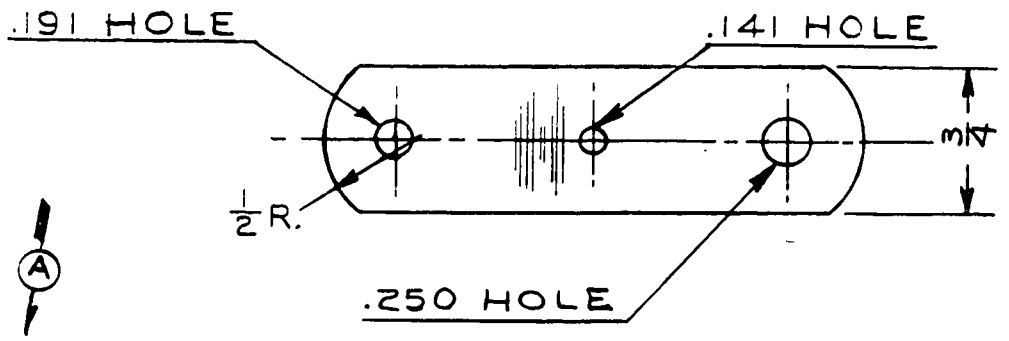

*NOTE: OPTIONAL EQUIPMENT FOR MODEL J3

LET	REVISION	DATE	BY
C	REDRAWN WITHOUT CHANGE	5-31-51	L.M.M.
B	.062 DIM. REMOVED. 1/16 RAD. ADDED	1-26-44	J.B.M.
A	NOTE ADDED	10-25-43	R.E.S

MODEL	PER PLANE	NEXT ASSEMBLY	SUPERSEDES	SUP. BY
J5D	2	81381		
J5C	2	81381		
NE-1	2	81381		
J5	2	81381		
*J3	2	81381		

THIS DRAWING IS THE PROPERTY OF THE PIPER AIRCRAFT CORP. AND ITS POSSESSION BY UNAUTHORIZED PERSONS SHALL NOT BE CONSTRUED AS PERMISSION TO REPRODUCE FOR SALE IN WHOLE OR IN PART ANY DEVICES SHOWN THEREON.

PIPER AIRCRAFT CORP.
LOCK HAVEN, PENNA.

PART NO.	NO. REQ.	SIZE	DESCRIPTION
		.062 x 3/4 x 2 27/32	#1025 STEEL
		MATERIAL	

SCALE FULL SIZE | TOTAL WT.—LBS.

FINISH—PIPER SPECIFICATION # 10

MANUFACTURING PRACTICES—PIPER SPECIFICATION # 9

PLATE — BUNGEE PULLEY HOUSING

DRAFTSMAN	CHECKER	STANDARDS
G.R.K. 5-29-41	F.B. 6-4-41.	

80331

364

A364

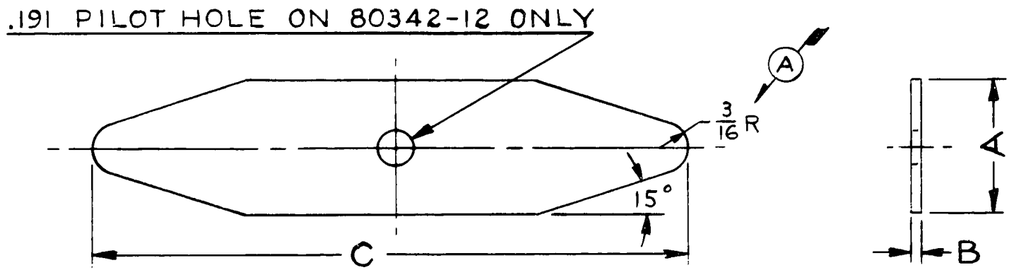

PART NO.	A	B	C	MAT'L.	REMARKS
80342-2	1/2	.062	4 7/8	*1025 STEEL	WAS PART *317
80342-3	5/8	.062	3 1/8	*1025 STEEL	WAS PART *401
80342-4	5/8	.095	3 1/4	*1025 STEEL	WAS PART *320
80342-5	3/4	.045	6 1/4	*1025 STEEL	WAS PART *J2-340
80342-6	3/4	.045	7	*1025 STEEL	WAS PART *1015 & 11471
80342-7	3/4	.095	4 1/2	*1025 STEEL	WAS PART *J2-309
80342-8	7/8	.095	5	*1025 STEEL	WAS PART *312
80342-9	1	.062	3 1/4	*1025 STEEL	WAS PART *J2-31
80342-10	1	.062	5	*1025 STEEL	WAS PART *J2-314
80342-11	1 3/16	.062	5	*1025 STEEL	WAS PART *30161
80342-12	3/4	.062	3	*1025 STEEL	WAS PART *3039
80342-13	7/8	.062	5	*1025 STEEL	WAS PART *8175
80342-14	3/4	.062	4 1/2	*1025 STEEL	WAS PART *J2-378
80342-15	1	.062	3 3/4	*1025 STEEL	
80342-16	1	.045	4 1/2	*1025 STEEL	
80342-17	1	.062	4	*1025 STEEL	
80342-18	1/2	.045	3 1/2	*1025 STEEL	

PART NO.	A	B	C	MAT'L.	REMARKS
...					

NOTE: A PART NO. CROSSED OUT IN THIS MANNER ~~00000~~ INDICATES PART IS OBSOLETE.

THIS DRAWING IS THE PROPERTY OF THE PIPER AIRCRAFT CORP. AND ITS POSSESSION BY UNAUTHORIZED PERSONS SHALL NOT BE CONSTRUED AS PERMISSION TO REPRODUCE FOR SALE, IN WHOLE OR IN PART, ANY DEVICES SHOWN THEREON

LET.	REVISION	DATE	BY
F	REDRAWN WITHOUT CHANGE	6-6-51	C.K.
E	-18 ADDED	2-2-48	R.C.
D	-17 ADDED: I WAS 1¼ FOR -15	7-28-47	R.M.
C	-15 & -16 ADDED	5-6-47	I.M.M.
B	30161 WAS 362 FOR -11	11-2-43	C.J.H.
A	3/16 R WAS ¼ SQ. ENDS	12-15-42	R.R.B.

MODEL	PER PLANE	NEXT ASSEMBLY	SUPERSEDES	SUP. BY
			D884-B	

PIPER AIRCRAFT CORP.
LOCK HAVEN, PENNA.

NOTED

PART No. | No. REQ. | MATERIAL

SCALE | TOTAL WT.-LBS.

FINISH—PIPER SPECIFICATION #10

MANUFACTURING PRACTICES—PIPER SPECIFICATION #9

STRAPS-REINFORCEMENT

DRAFTSMAN	CHECKER	STANDARDS
V. F. 6-18-41	R. R. B. 6-20-41	

80342

672

A672

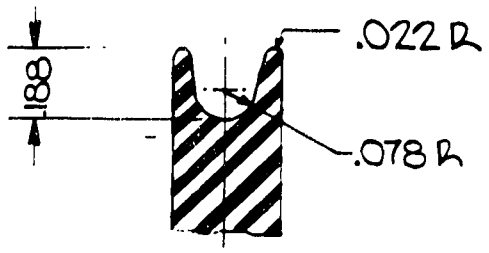

SECTION A-A
TWICE SIZE

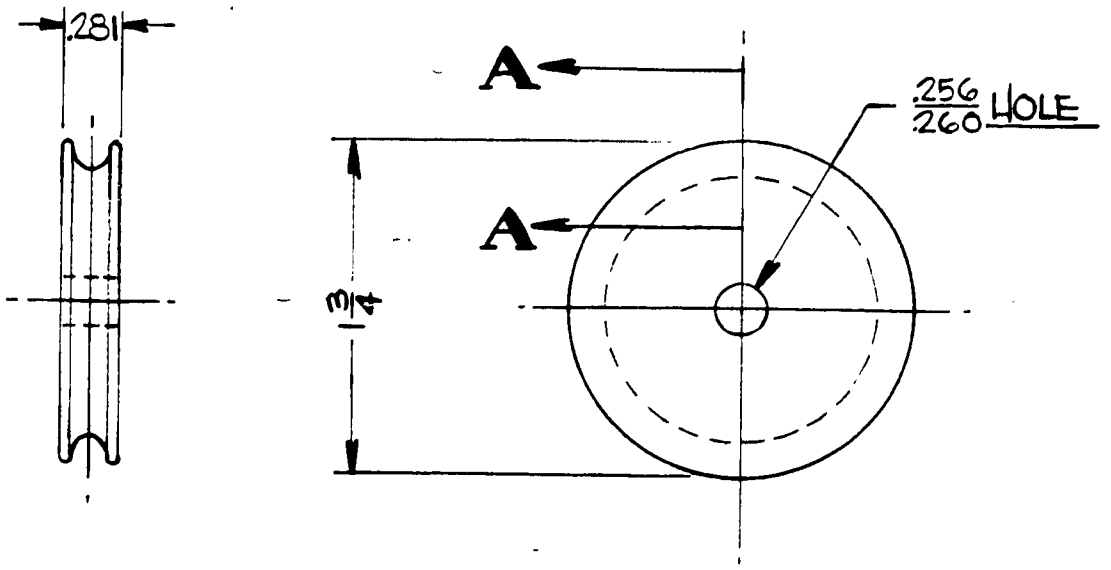

WAS J2-90

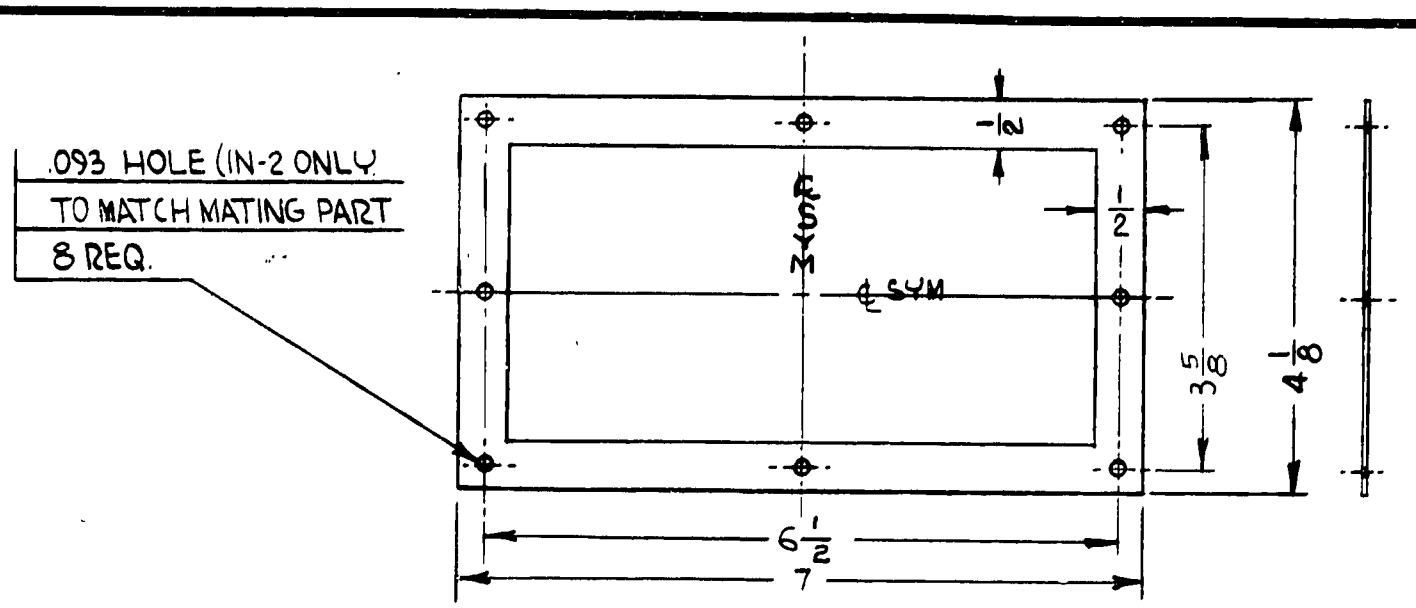

PART NO.	MATERIAL	MODEL	NO PER SHIP	NEXT ASSEMBLY	REMARKS
80541-2	.050 PYRALIN	J3	4	2406 13363 16249	WAS 80541
		J5S	10	2406 16543	
80541-3	.032 3S ½ H. ALUM.				

THIS DRAWING IS THE PROPERTY OF THE PIPER AIRCRAFT CORP. AND ITS POSSESSION BY UNAUTHORIZED PERSONS SHALL NOT BE CONSTRUED AS PERMISSION TO REPRODUCE FOR SALE, IN WHOLE OR IN PART, ANY DEVICES SHOWN THEREON.

MODEL	PER PLANE	NEXT ASSEMBLY	SUPERSEDES	SUP. BY
NOTED	NOTED	NOTED		

LET.	REVISION	DATE	BY
Y	REDRAWN & REVISED	8-7-46	L.R.

PIPER AIRCRAFT CORP.
LOCK HAVEN, PENNA.

PART No.	No. REQ.	SIZE	DESCRIPTION
		NOTED ×4 1/8 ×7	NOTED

MATERIAL

SCALE 6 IN = 1 FT. — TOTAL WT.—LBS.

FINISH—PIPER SPECIFICATION #10

MANUFACTURING PRACTICES—PIPER SPECIFICATION #9

FRAME - INSPECTION WINDOW

DRAFTSMAN	CHECKER	STANDARDS
L.R. 8-7-46	R. D. M. 8-12-46	

80541

PENCILTEX A. & B. SMITH CO., PGH., PA.

366

A366

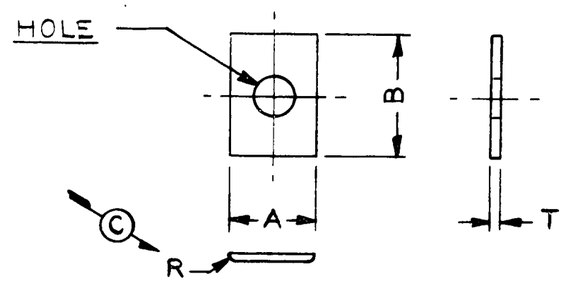

PART NO.	A	B	T	HOLE	MATERIAL	R	REMARKS
81102-2	.438	5/8	.095	.332 / .337	#1025 STEEL	1/32	WAS 10261
81102-3	.438	5/8	.095	.281 / .286	#1025 STEEL	1/32	WAS 10271
81102-4	5/8	5/8	.062	#11	#1025 STEEL		WAS 129
81102-5	7/8	2 1/8	.095	.374 / .385	#1025 STEEL		WAS 2570
81102-6	7/8	1 1/2	.045	1/2	#1025 STEEL		WAS 2033
81102-7	3/4	3/4	.045	#28	#1025 STEEL		WAS 80721-2
81102-8	7/16	3/4	.125	.191	#1025 STEEL		ADDED 3-9-42
81102-9	7/8	2 5/8	.125	.374 / .385	#1025 STEEL		
81102-10	3/4	15/16	.095	.191	#1025 STEEL		
81102-11	5/8	3/4	.032	.250	#1025 STEEL		
81102-12	1/2	1/2	.032	.187	#1025 STEEL		
81102-13	1/2	3/4	.062	.246	#1025 STEEL		
81102-14	11/16	1	.010 TO .014	.250	61S-T ALUM.		
81102-15	11/16	1	.016	.250	3S-1/2 H. ALUM.		
81102-16	11/16	1	.032	.250	#1025 STEEL		
81102-17	.563	.563	.062	.374 / .385	#1025 STEEL	1/32	

LET	REVISION	DATE	BY
L	REDRAWN WITHOUT CHANGE	6-7-51	C.K.
K	-17 ADDED	12-20-49	K.D.
J	-14,-15-16 ADDED	5-21-47	H.R.K.
H	-11,-12-13 ADDED	5-20-47	R.D.R.
G	-10 ADDED	2-27-45	E.L.N.
F	-9 ADDED	2-8-45	J.B.M.
E	.332/.337 WAS .332/.337 FOR-2	2-11-44	V.C.
D	A FOR-3 WAS 7/16; HOLE WAS 9/32	2-11-44	V.C.
C	VIEW & COL. "R" ADDED	2-11-44	V.C.
B	ON-5 HOLE WAS 3/8	7-3-43	C.K.
A	ON-2 "A" WAS 7/16; HOLE WAS "Q"	7-3-43	C.K.

MODEL	PER PLANE	NEXT ASSEMBLY	SUPERSEDES	SUP. BY

THIS DRAWING IS THE PROPERTY OF THE PIPER AIRCRAFT CORP. AND ITS POSSESSION BY UNAUTHORIZED PERSONS SHALL NOT BE CONSTRUED AS PERMISSION TO REPRODUCE FOR SALE IN WHOLE OR IN PART ANY DESIGN SHOWN THEREON.

PIPER AIRCRAFT CORP.
LOCK HAVEN, PENNA.

NOTED

PART NO. | NO. REQ. | MATERIAL

SCALE ——— | TOTAL WT.—LBS.

FINISH—PIPER SPECIFICATION = 10

MANUFACTURING PRACTICES—PIPER SPECIFICATION = 9

WASHERS — SQUARE

R. C. M.	R. R. B.		
8-24-41	8-26-41		81102
DRAFTSMAN	CHECKED	STANDARDS	

A673

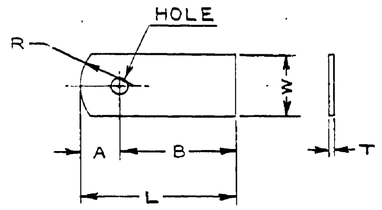

PART NO.	L	B	W	R	A	T	HOLE	MATERIAL	REMARKS
81172-2		7/16	3/4	3/8	3/8	.062	.191	*1025 STEEL	WAS E2-2129
81172-3		3/4	5/8	1/2	3/8	.045	.191	*1025 STEEL	WAS J3-2028
81172-4		9/16	3/4	1/2	3/8	.062	.191	*1025 STEEL	WAS 2324
81172-5		1 1/8	5/8	1/2	3/8	.045	.250	*1025 STEEL	
81172-6	1 1/4	—	5/8	1/2	—	.045	—	*1025 STEEL	WAS 2357
81172-7		5/16	5/8	5/16	5/16	.045	.129	*1025 STEEL	WAS F2-902
81172-8		5/8	1	1/2	1/2	.032	.313	*1025 STEEL	WAS 4052
81172-9		1/4	5/8	1/2	5/16	.062	.250	*1025 STEEL	WAS J3-54
81172-10		1/8	5/8	1/2	3/8	.045	.191	*1025 STEEL	WAS 4105
81172-11		1 1/4	1	1/2	1/2	.062	.375	*1025 STEEL	WAS 4202
81172-12		1 1/8	3/4	1/2	5/16	.125	.191	*1025 STEEL	WAS 4273
81172-13		1 1/8	3/4	1/2	3/8	.062	.191	*1025 STEEL	WAS 2364
81172-14		5/8	1	1/2	1/2	.095	.250	*1025 STEEL	WAS 224
81172-15		9/16	3/4	1/2	7/16	.095	.250	*1025 STEEL	WAS 2232
81172-16		1/2	1	1/2	1/2	.045	.191	*1025 STEEL	WAS 693
81172-17		1 3/8	5/8	1/2	5/16	.045	.191	*1025 STEEL	WAS 7045
81172-18		1	5/8	1/2	1/4	.045	.191	*1025 STEEL	WAS 7124
81172-19		5/16	5/16	1/2	3/16	.062	.129	*1025 STEEL	WAS J3-440
81172-20		.563	1	1/2	7/16	.045	.313	*1025 STEEL	WAS J2-835
81172-21		7/16	3/4	1/2	3/8	.062	.250	*1025 STEEL	
81172-22		3/8	7/16	3/8	5/16	.125	.188	*1025 STEEL	
81172-23		7/16	3/4	3/8	3/8	.095	.191	*1025 STEEL	WAS E2-151
81172-24		9/16	3/8	3/16	3/16	.062	.136	*1025 STEEL	
81172-25		7/8	3/4	1/2	3/8	.062	.191	*1025 STEEL	
81172-26		13/32	5/8	1/2	9/32	.045	.191	*1025 STEEL	
81172-27		7/16	1	3/4	9/16	.045	.141	*1025 STEEL	
81172-28		7/8	5/8	1/2	3/8	.045	.191	*1025 STEEL	
81172-29		5/16	5/16	1/2	3/16	.062	.125	*1025 STEEL	WAS F2-911
81172-30		.344	5/8	1/2	3/8	.045	.191	*1025 STEEL	
81172-31		1/2	3/8	3/8	1/4	.032	.098	*1025 STEEL	
81172-32	1 1/8	25/32	1/2	3/4	—	.045	.191	*1025 STEEL	
81172-33	1	5/8	3/4	1/2	—	.045	.250	*1025 STEEL	
81172-34	15/16	9/16	5/8	1/2	—	.062	.191	*1025 STEEL	
81172-35	3/4	1/2	1/2	1/2	—	.045	.141	*1025 STEEL	
81172-36	1	—	3/4	5/8	—	.032	—	TYPE 347 STL ANNEALED 2D FIN.	
81172-37	1 1/4	—	5/8	1/2	5/16	.045	.191	*1025 STEEL	
81172-38	1 3/8	1 1/8	1/2	1/2	1/4	.095	.191	*1025 STEEL	
81172-39	3/4	—	1/2	1/2	—	.045	—	*1025 STEEL	
81172-40	1 1/2	—	5/8	1/2	3/8	.045	.166	*1025 STEEL	
81172-41	3/4	3/8	3/4	1/2	—	.045	.166	*1025 STEEL	
81172-42	13/16	—	13/16	5/8	5/16	.062	.281	*1025 STEEL	
81172-43	5/8	—	1/2	1/2	1/4	.045	.250	*1025 STEEL	
81172-44	1 7/16	15/16	1	5/8	—	.062	.625	*1025 STEEL	
81172-45	1 3/8	15/16	13/16	1/2	—	.062	.437	*1025 STEEL	
81172-46	1 3/8	1 3/16	3/8	1/4	—	.032	.141	*1025 STEEL	
81172-47	1 3/8	15/16	13/16	1/2	—	.062	.166	*1025 STEEL	
81172-48	3/4	1/2	1/2	5/8	1/4	.062	.191	*1025 STEEL	
81172-49	2 1/32	—	3/4	3/8	.197	.062	189/195	*1025 STEEL	
81172-50	—	11/16	1	1/2	1/2	.062	.437	*1025 STEEL	
81172-51	1	—	7/8	1/2	5/16	.045	.188	*1025 STEEL	
81172-52	5/8	1/4	5/8	1/2	—	.045	.191	*1025 STEEL	
81172-53	1 7/8	1 1/2	13/16	1/2	—	.062	.437	*1025 STEEL	
81172-54	1 1/8	3/4	13/16	1/2	—	.062	.437	*1025 STEEL	
81172-55	2 1/8	1 1/2	1 1/2	1	—	.062	.750	*1025 STEEL	
81172-56	2	1 1/2	1	5/8	—	.062	.625	*1025 STEEL	
81172-57	1	5/8	3/4	1/2	—	.095	.191	*1025 STEEL	
81172-58	1 1/2	3/4	1 1/2	3/4	—	.062	.875	*1025 STEEL	
81172-59	15/16	—	7/8	1/2	3/8	.062	.313	*1025 STEEL	
81172-60	—	3/8	5/8	1/2	5/16	.062	.191	*1025 STEEL	
81172-61	1 3/4	1 1/2	5/8	3/8	—	.045	.191	*1025 STEEL	
81172-62	3/4	7/16	5/8	1/2	—	.045	.191	*1025 STEEL	
81172-63	3 15/16	—	3/4	1/2	3/8	.045	.191	*1025 STEEL	

PART NO.	L	B	W	R	A	T	HOLE	MATERIAL	REMARKS

PART NO.	L	B	W	R	A	T	HOLE	MATERIAL	REMARKS

SEE ALSO DWG. 81302 & 10060

LET.	REVISION	DATE	BY
AF	-63 ADDED	5-24-51	LEN
AE	-62 ADDED	2-14-51	L.N.M.
AD	-61 ADDED	1-23-51	C.K.
AC	-60 ADDED	10-26-50	HRK
AB	-58 & -59 ADDED	12-29-49	K.D.
AA	-53-54-55-56 & -57 ADDED	7-14-49	C.K.
Z	-52 ADDED	5-19-49	C.K.
Y	REDRAWN WITHOUT CHANGE -SIAME	12-22-48	R.M.

THIS DRAWING IS THE PROPERTY OF THE PIPER AIRCRAFT CORP. AND ITS POSSESSION BY UNAUTHORIZED PERSONS SHALL NOT BE CONSTRUED AS PERMISSION TO REPRODUCE FOR SALE, IN WHOLE OR IN PART, ANY DEVICES SHOWN THEREON

MODEL	PER PLANE	NEXT ASSEMBLY	SUPERSEDES	SUP. BY

PIPER AIRCRAFT CORP.
LOCK HAVEN, PENNA.

NOTED

PART No. | NO. REQ. | MATERIAL

SCALE | TOTAL WT.—LBS.

FINISH—PIPER SPECIFICATION #10

MANUFACTURING PRACTICES—PIPER SPECIFICATION #9

LUGS
(SHEET I)

DRAFTSMAN	CHECKER	STANDARDS
R T M 12-22-48	J C B 1-6-49	

81172

A818

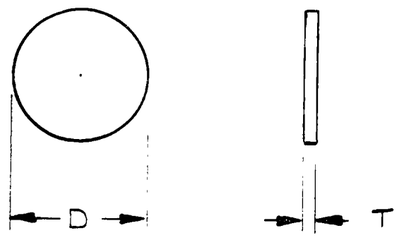

PART NO.	D	T	MATERIAL	REMARKS	DATE ADDED
81232-2	1 1/2	.062	#1025 STEEL	WAS 80122-2 & 56	
81232-3	31/32	.045	#1025 STEEL	WAS 80122-3 & 807	
81232-4	1 1/4	.062	#1025 STEEL	WAS J2-302	
81232-5	31/32	.062	#1025 STEEL	WAS 219	
81232-6	3/4	.045	#1025 STEEL		
81232-7	.625	.062	#1025 STEEL	WAS J3-253	
81232-8	1 1/16	.062	#1025 STEEL	WAS J2-325	
81232-9	1 3/8	.125	#1025 STEEL	WAS 30271	
81232-10	1 3/8	.062	#1025 STEEL	WAS 443	
81232-11	1	.062	#1025 STEEL		
81232-12	1 1/4	.125	#1025 STEEL	WAS 333	
81232-13	.688	1/4	RUBBER	WAS J3-814	
81232-14	1 1/4	.080	PYRALIN	WAS 1037 & 80531-7	
81232-15	1 1/4	.050	PYRALIN	WAS 1139 & 80531-10	
81232-16	1 3/4	.030	PYRALIN	WAS 6137 & 80531-12	
81232-17	1	.032	3S ½ H. ALUM.		
81232-18	5/8	.045	#1025 STEEL	WAS 4300	ADDED 3-19-42
81232-19	1	.032	#1025 STEEL		ADDED 4-2-42
81232-20	3/4	.062	#1025 STEEL		ADDED 6-25-42
81232-21	7/8	.062	#1025 STEEL		ADDED 7-22-42

PART NO.	D	T	MATERIAL	REMARKS	DATE ADDED
81232-22	4 1/8	.025	3S ½H. ALUM.	WAS 5255	ADDED 8-18-42
81232-23	.750	.094	#1025 STEEL		ADDED 7-7-43
81232-24	1 5/16	.032	#1025 STEEL		
81232-25	1 3/4	.032	#1025 STEEL		
81232-26	1 3/4	.032	3S0 ALUM.		
81232-27	3	.062	ST. STL. TYPE 302 ANNEALED 2D FIN.		
81232-28	9/16	.020	3S-½ H. ALUM.		
81232-29	1 3/4	.095	#1025 STEEL		
81232-30	.688	3/16	BELTING LEATHER		
81232-31	2	—	ARTIFICAL LEATHER		
81232-32	1 1/2	—	ARTIFICAL LEATHER		
81232-33	2 1/8	.020	H.R. STEEL		
81232-34	2	.062	ST. STL. TYPE 347, ANNEAL. 2D FINISH		
81232-35	2 1/4	.018	TERNEPLATE		
81232-36	2 3/16	1/16	HARD VULCANIZED FIBRE		
81232-37	1.906	.062	ST. STL. TYPE 347 ANNEAL. 2D FIN.		
81232-38	7/8	.032	#1025 STEEL		

LET	REVISION	DATE	BY
T	REDRAWN & REVISED	6-22-51	C.B.

MODEL	PER PLANE	NEXT ASSEMBLY	SUPERSEDES	SUP. BY

THIS DRAWING IS THE PROPERTY OF THE PIPER AIRCRAFT CORP. AND ITS POSSESSION BY UNAUTHORIZED PERSONS SHALL NOT BE CONSTRUED AS PERMISSION TO REPRODUCE FOR SALE IN WHOLE OR IN PART ANY DEVICES SHOWN THEREON.

PIPER AIRCRAFT CORP.
LOCK HAVEN, PENNA.

NOTED

PART NO. | NO. REQ. | MATERIAL

SCALE | TOTAL WT.—LBS.

FINISH—PIPER SPECIFICATION # 10

MANUFACTURING PRACTICES—PIPER SPECIFICATION # 9

DISCS

DRAFTSMAN	CHECKER	STANDARDS
C.E.B. 6-22-51	I.E.M. 6-29-51	

81232

677

A674

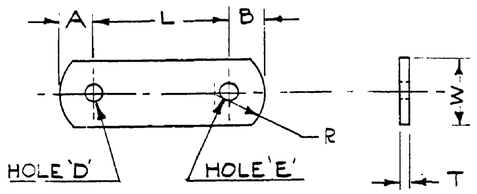

PART NO	A	L	B	W	T	R	HOLE 'D'	HOLE 'E'	MATERIAL	REMARKS
81262-2	5/16	1 1/2	5/16	3/4	.095	1/2	#11	#11	#1025 STL.	WAS PART 4004
81262-3	5/16	2	5/16	3/4	.095	1/2	.191	.191	#1025 STL.	WAS PART 4207
81262-4	5/16	2 1/2	5/16	3/4	.095	1/2	#11	#11	#1025 STL.	WAS PART 4208
81262-5	5/16	2 3/4	5/16	3/4	.095	1/2	.191	.191	#1025 STL.	WAS PART 4206
81262-6	3/16	5/8	5/16	5/8	.045	1/2	#30	#11	#1025 STL.	
81262-7	1/2	3	1/2	1/2	.045	1/2	#4	#4	#1025 STL.	WAS PART 5394
81262-8	3/8	1.375	3/8	5/8	.045	1/2	.191	.191	#1025 STL.	WAS PART E2-451
81262-9	3/8	1 3/8	3/8	5/8	.062	1/2	.191	.191	#1025 STL.	WAS PART J3-435
81262-10	3/8	1 3/8	3/8	5/8	.032	1/2	#11	#11	#1025 STL.	WAS PAPT 4149
81262-11	3/8	1	3/8	5/8	.032	1/2	#11	#11	#1025 STL.	WAS PART 4150
81262-12	1/4	1 9/16	3/8	5/8	.045	1/2	#11	1/4	#1025 STL.	WAS PART 4151
81262-13	3/8	7/8	3/8	3/4	.095	1/2	#11	#11	#1025 STL.	WAS PART 4157
81262-14	3/8	7/8	3/8	5/8	.062	1/2	#11	#11	#1025 STL.	WAS PART 4325 (40101 REMOVE ALL BURRS
81262-15	3/8	1 1/16	3/8	3/4	.062	1/2	.375	.191	#1025 STL.	
81262-16	5/32	7/8	5/32	3/8	.032	SQ. END	#30	#30	#1025 STL.	WAS PART J3-302
81262-17	3/8	1 1/4	3/8	1 3/16	.062	SQ. END	#18	#18	#1025 STL.	WAS PART 81251
81262-18	1/2	2 1/16	1/2	1	.095	1/2	.252 PUNCH	.252 PUNCH	#1025 STL.	WAS PART E2-2020
81262-19	3/8	1 3/8	3/8	5/8	.062	1/2	.250	.191	#1025 STL.	
81262-20	5/16	6 5/8	5/16	5/8	.062	1/2	1/4	#11	#1025 STL.	WAS PART 7101
81262-21	3/8	5 3/4	3/8	3/4	.062	1/2	#11	#11	#1025 STL.	WAS PART 7118
81262-22	5/16	2 3/8	2 7/8	3/4	.062	1/2	.250 .259	.190 .195	#1025 STL.	WAS PART 4269
81262-23	3/8	1 1/4	3/8	5/8	.032	1/2	F	#11	#1025 STL.	WAS PART 7302
81262-24	3/8	3/4	3/8	3/4	.095	1/2	.249 .255	.249 .255	#1025 STL.	
81262-25	3/8	7/8	1/4	3/4	.125	1/2	5/16	7/32	#1025 STL.	SUP. J2-331
81262-26	5/16	1 1/16	5/16	3/4	.095	1/2	#11	#11	#1025 STL.	
81262-27	5/16	1 1/2	5/16	3/4	.095	1/2	3/16	5/16	#1025 STL.	
81262-28	5/16	2 1/4	5/16	5/8	.062	1/2	1/4	.191	#1025 STL.	SAME AS 81322-2 EXCEPT FLAT
81262-29	5/16	1 1/16	5/16	3/4	.045	1/2	#11	#11	#1025 STL.	
81262-30	3/8	7/8	1/4	3/4	.125	1/2	.374 .384	.219	#1025 STL.	
81262-31	1/4	3/4	1/4	1/2	.062	1/2	.250	.129	#1025 STL.	
81262-32	3/8	1 7/8	3/8	3/4	.095	1/2	.191	.191	#1025 STL.	
81262-33	1/4	3	1/4	1/2	.032	1/2	.166	.166	#1025 STL.	
81262-34	1/4	7/8	1/4	1/2	.045	1/2	.250	.250	#1025 STL.	
81262-35	1/4	1 1/2	1/4	1/2	.095	1/2	.191	.191	#1025 STL.	
81262-36	5/16	2 3/8	5/16	11/16	.062	3/8	.191	.191	#1025 STL.	
81262-37	3/8	6 5/16	3/8	5/8	.045	1/2	.166	.166	#1025 STL.	
81262-38	3/8	4 7/8	3/8	1	.095	1/2	.375	.375	#1025 STL.	
81262-39	3/16	1	1/4	1/2	.032	1/2	.129	.191	#1025 STL.	
81262-40	1/4	11/16	1/4	1/2	.032	1/2	.250	.141	#1025 STL.	
81262-41	7/16	9	7/16	7/8	.125	5/8	.219	.219	61S-T ALUM.	
81262-42	5/16	7/8	5/16	3/4	.095	1/2	#11	#11	#1025 STL.	
81262-43	5/16	1	5/16	3/4	.095	1/2	#11	#11	#1025 STL.	
81262-44	5/16	1 1/8	5/16	3/4	.095	1/2	#11	#11	#1025 STL.	
81262-45	3/8	1/2	3/8	3/4	.095	1/2	.191	.250	#1025 STL.	
81262-46	3/8	1 1/2	3/8	3/4	.062	1/2	.191	.191	#1025 STL.	
81262-47	3/8	1 1/4	3/8	3/4	.095	1/2	.249 .255	.269 .255	#1025 STL.	
81262-48	3/8	1	3/8	5/8	.045	1/2	.313	.313	#1025 STL.	
81262-49	3/8	1	5/8	1/2	.062	1/2	.098	.098	#1025 STL.	
81262-50	3/8	6 1/2	3/8	3/4	.062	1/2	.191	.191	#1025 STL.	
81262-51	1/4	1	1/4	1/2	.045	1/4	.141	.250	#1025 STL.	

SEE ALSO DWG. 81352

LET.	REVISION	DATE	BY
AE	-51 ADDED	4-10-51	C.K.
AD	-50 ADDED	3-8-51	LEM.
AC	WAS 1 1/16, 5/8 WAS 3/16 FOR -49	5-24-50	C.K.
AB	1 1/4 WAS 1/4 ON -47	3-20-50	NRK
AA	-49 ADDED	3-8-50	C.K.
Z	-19 ADDED	12-1-49	K.D.
Y	REDRAWN & REVISED, -15 ADDED	11-14-49	K.D.

THIS DRAWING IS THE PROPERTY OF THE PIPER AIRCRAFT CORP. AND ITS POSSESSION BY UNAUTHORIZED PERSONS SHALL NOT BE CONSTRUED AS PERMISSION TO REPRODUCE FOR SALE, IN WHOLE OR IN PART, ANY DEVICES SHOWN THEREON

MODEL	PER PLANE	NEXT ASSEMBLY	SUPERSEDES	SUP. BY

PIPER AIRCRAFT CORP.
LOCK HAVEN, PENNA.

NOTED

PART NO. | NO. REQ. | MATERIAL

SCALE | TOTAL WT.—LBS.

FINISH—PIPER SPECIFICATION #10

MANUFACTURING PRACTICES—PIPER SPECIFICATION #9

LINKS
(SHEET I)

DRAFTSMAN	CHECKER	STANDARDS
K. DAY 11-14-49		

81262

8/9

A8/9

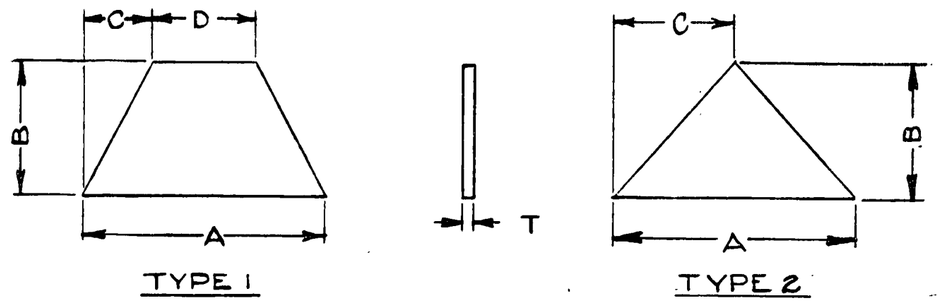

TYPE 1 TYPE 2

PART NO.	TYPE	A	B	C	D	T	REMARKS
81272-2	1	1 13/16"	1"	5/8"	3/4"	.095"	WAS PART #3028
81272-3	1	1 5/8"	1"	9/16"	5/8"	.095"	WAS PART #3027
81272-4	1	1 7/8"	1"	7/16	1"	.045"	WAS PART #2342
81272-5	1	1 7/8"	1"	1/2"	7/8"	.045"	WAS PART #201
81272-6	1	2 3/8"	1"	1"	13/16"	.062"	WAS PART #2644
81272-7	1	1 3/4"	1"	19/32"	9/16"	.062"	WAS PART #2641
81272-8	1	3 1/8"	1"	1 5/16"	1 1/4"	.062"	WAS PART #2505
81272-9	1	2 5/8"	1"	1/2"	1 7/16"	.045"	WAS PART #24
81272-10	1	1 3/4"	5/8"	5/8"	1/2"	.032"	WAS PART #2358
81272-11	1	2 1/4"	1"	7/8"	1/2"	.045"	WAS PART #2369
81272-12	1	4"	1"	1 7/16"	1 1/8"	.045"	WAS PART #2370
81272-13	1	1 3/8"	1/2"	19/32"	3/16"	.045"	WAS PART #8074
81272-14	2	1 3/4"	3/4"	7/8"	—	.032"	WAS PART #2512
81272-15	2	1 1/2"	3/4"	3/4"	—	.062"	WAS PART #J2-217
81272-16	2	3"	7/8"	1 1/2"	—	.062"	WAS PART #343 & 30091
81272-17	1	2 3/16"	7/8"	15/16"	5/16"	.062"	WAS PART #344 & 30101
81272-18	2	1 1/2"	3/4"	3/4"	—	.062"	WAS PART #232
81272-19	1	1 7/8"	1"	1/2"	7/8	.045"	WAS PART #J2-2073
81272-20	1	1 1/2"	1"	5/8"	9/16	.045"	WAS PART #J2-2074

PART NO.	TYPE	A	B	C	D	T	REMARKS
81272-21	2	4 1/16	1	2 1/32	—	.032"	WAS PART #2611
81272-22	2	1 1/16"	17/32"	17/32"	—	.020"	H.R. STEEL
81272-23	2	1 3/16"	9/16"	1/2"	—	.095"	ADDED 3-9-42
81272-24	1	2 7/8"	7/8"	1 1/2"	7/8"	.062"	ADDED 3-31-42
81272-25	2	1"	15/32"	7/16"	—	.062"	ADDED 7-21-42
81272-26	2	1 11/16"	13/16"	19/32"	—	.062"	WAS #2106 ADDED 9-19-42
81272-27	2	2 7/16"	7/8"	3/8"	—	.062"	WAS #2665 ADDED 9-19-42
81272-28	2	3 5/8"	1 11/16"	1 1/8"	—	.025"	35 1/2 H ALUMINUM ADDED 11-2-42
81272-29	1	1 1/2"	1"	9/16"	5/8"	.095"	ADDED 11-23-42
81272-30	2	1 13/16"	13/16"	9/16"		.032"	ADDED 4-1-43
81272-31	1	2 3/16"	3/4"	1/8"	1 5/8"	.045"	
81272-32	2	1 3/4"	7/8	7/8"		.045"	
81272-33	2	5/8"	9/16"	5/16"		.062"	
81272-34	2	2"	1"	1"		.032	
81272-35	2	2 13/16	1/2	1 7/16		.032	
81272-36	2	1 15/16	13/16	1		.095	MAT'L. 61ST ALUM.
81272-37	1	4	2 3/8	1 1/4	2	.032	24 S-T ALUM.
81272-38	1	2 3/16"	1"	3/4"	1 3/16"	.045"	#1025 STEEL
81272-39	1	1 1/16	1/2	7/16	1/8	.045	
81272-40	1	1 15/16	3/4	15/32	1 3/16	.095	
81272-41	1	2 1/4	1	5/8	1 5/8	.045	#1025 STEEL
81272-42	2	1 7/16	9/16	19/32	—	.032	
81272-43	2	1 5/16	5/8	1/2	—	.032	
81272-44	1	2 13/16	19/16	1 1/4	1/2	.045	CODE NO. 128 821
81272-45	1	4 1/16	1	3/8	2 15/16	.045	
81272-46	2	2 5/8	1	1 5/16	—	.032	
81272-47	2	2	1 1/4	1	—	.032	
81272-48	1	1 11/16	11/16	1/2	1/4	.095	
81272-49	1	7/8	3/4	3/16	1/2	.062	
81272-50	1	2 3/4	7/8	1 1/8	1/2	.032	

SEE ALSO DWG. 11994

LET.	REVISION	DATE	BY
U	-50 ADDED	6-7-48	R.M.
T	-49 ADDED	5-21-48	J.C.B.
S	ON -48 1 1/16, 1 1/16, 1/2, 1/4 & .095 WAS 1 3/4, 5/8, 13/16, 1/2 & .062 RESP.	5-10-48	H.R.K.
R	-48 ADDED	4-23-48	R.C.
Q	-46, -47 ADDED	11-18-47	R.C.
P	-45 ADDED	9-18-47	R.M.
O	T OF -15 WAS .045	4-1-47	T.N.K.
N	-44 ADDED	3-7-47	H.M.Z.
M	-42 & -43 ADDED	3-20-46	I.M.
L	-41 ADDED	12-12-45	B.B.C.
K	-40 ADDED	11-20-45	J.E.H.
J	REDRAWN WITHOUT CHANGE	10-22-45	D.A.W.
H	-39 ADDED	10-22-45	D.A.W.
G	-38 ADDED	9-21-45	H.M.Z.
F	-37 ADDED	8-27-45	E.L.N.
E	-32-33-34-35-36 ADDED	2-1-45	H.M.Z.
D	-31 ADDED	12-29-44	J.W.
C	ON -24 "D" WAS 15/16"	4-16-42	H.N.
B	1 7/16" WAS 1"	12-24-41	W.O.
A	2 5/8" WAS 2"	12-24-41	W.O.
LET.	REVISION	DATE	BY

THIS DRAWING IS THE PROPERTY OF THE PIPER AIRCRAFT CORP. AND ITS POSSESSION BY UNAUTHORIZED PERSONS SHALL NOT BE CONSTRUED AS PERMISSION TO REPRODUCE FOR SALE, IN WHOLE OR IN PART. ANY DEVICES SHOWN THEREON

MODEL	PER PLANE	NEXT ASSEMBLY	SUPERSEDES	SUP. BY

PIPER AIRCRAFT CORP.
LOCK HAVEN, PENNA.

PART No.	NO. REQ.	MATERIAL
		#1025 STEEL UNLESS OTHERWISE NOTED

SCALE — TOTAL WT.—LBS.

FINISH—PIPER SPECIFICATION #10

MANUFACTURING PRACTICES—PIPER SPECIFICATION #9

GUSSETS

DRAFTSMAN	CHECKER	STANDARDS
8-21-41 W.E.S.	8-22-41 R.R.B.	

81272

A675

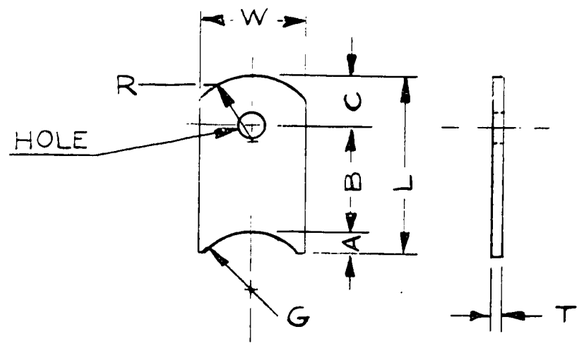

PART NO.	L	A	B	C	W	R	G	T	HOLE	MATERIAL	REMARKS
81302-2	1 3/8	1/16	15/16	3/8	5/8	1/2	1/2	.095	.191	#1025 STEEL	WAS 30401
81302-3	1 3/16	1/16	3/4	3/8	5/8	1/2	1/2	.095	.191	#1025 STEEL	WAS 30391
81302-4	1	1/8	1/2	3/8	5/8	1/2	7/16	.062	.191	#1025 STEEL	WAS J3-441
81302-5	1 1/8	3/16	9/16	3/8	3/4	3/8	3/8	.095	.438	#1025 STEEL	WAS 231
81302-6	1 11/16	3/8	13/16	1/2	1	1/2	3/8	.062	.250	#1025 STEEL	WAS 2001
81302-7	1	3/16	7/16	3/8	3/4	1/2	7/16	.095	.191	#1025 STEEL	WAS 2011
81302-8	1 9/16	3/16	1	3/8	3/4	1/2	7/16	.095	.191	#1025 STEEL	WAS 2010
81302-9	19/32	3/32	9/32	7/32	1/2	1/4	1/4	.095	.190 / .195	#1025 STEEL	WAS 5404
81302-10	1 1/16	1/8	9/16	3/8	3/4	1/2	7/16	.095	DRILL 'S' REAM .247	#1025 STEEL	WAS 482
81302-11	1 3/16	3/16	5/8	3/8	3/4	1/2	3/8	.095	DRILL 'D' REAM .247	#1025 STEEL	WAS 477
81302-12	7/8	1/16	7/16	3/8	3/4	1/2	3/8	.062	.249 / .255	#1025 STEEL	WAS 2231
81302-13	1 1/4	1/4	5/8	3/8	3/4	1/2	3/8	.125	.249 / .255	#1025 STEEL	WAS 2655
81302-14	13/16	1/8	3/8	5/16	5/8	1/2	3/8	.045	.250	#1025 STEEL	WAS 7142
81302-15	1 27/32	3/16	1 13/32	1/4	5/8	1/2	3/8	.045	.250 / .255	#1025 STEEL	
81302-16		3/8	3/4	3/8	3/4	1/2	3/8	.062	.250	#1025 STEEL	WAS J3-406
81302-17	1 25/32	3/16	1 7/32	3/8	3/4	1/2	13/32	.125	.250	#1025 STEEL	
81302-18	1 27/32	3/16	1 9/32	3/8	3/4	1/2	11/32	.125	.250	#1025 STEEL	

PART NO	L	A	B	C	W	R	G	T	HOLE	MATERIAL	REMARKS
81302-19	2 15/16	1/16	2 1/2	3/8	3/4	1/2	3/8	.095	.249 / .255	#1025 ST'L.	
81302-20	1 5/8	1/8	—	—	5/8	1/2	1/2	.045	—	#1025 ST'L.	
81302-21	1	1/4	1/2	1/4	3/4	5/8	3/8	.095	.249 / .255	#1025 ST'L.	
81302-22	1 7/16	3/16	7/8	3/8	7/8	1/2	5/16	.095	.191	#1025 ST'L.	
81302-23	2 5/16	3/16	1 3/4	3/8	7/8	1/2	5/16	.095	.191	#1025 ST'L.	
81302-24	1 3/16	1/8	11/16	3/8	5/8	1/2	1/4	.062	.191	#1025 ST'L.	
81302-25	2 1/8	3/8	1 1/4	1/2	1	5/8	1/2	.095	.191	#1025 ST'L.	

SEE ALSO DWG. 81172 & 10060

LET	REVISION	DATE	BY
W	REDRAWN & REVISED	6-22-51	C.B.

MODEL	PER PLANE	NEXT ASSEMBLY	SUPERSEDES	SUP. BY

THIS DRAWING IS THE PROPERTY OF THE PIPER AIRCRAFT CORP. AND ITS POSSESSION BY UNAUTHORIZED PERSONS SHALL NOT BE CONSTRUED AS PERMISSION TO REPRODUCE FOR SALE IN WHOLE OR IN PART ANY DEVICES SHOWN THEREON.

PIPER AIRCRAFT CORP.
LOCK HAVEN, PENNA.

NOTED

PART NO.	NO. REQ.	MATERIAL

SCALE | TOTAL WT.—LBS.

FINISH—PIPER SPECIFICATION # 10

MANUFACTURING PRACTICES—PIPER SPECIFICATION # 9

LUGS
SHEET II

DRAFTSMAN	CHECKER	STANDARDS
C.E.B. 6-22-51	I.E.M. 6-29-51	

81302

676

A676

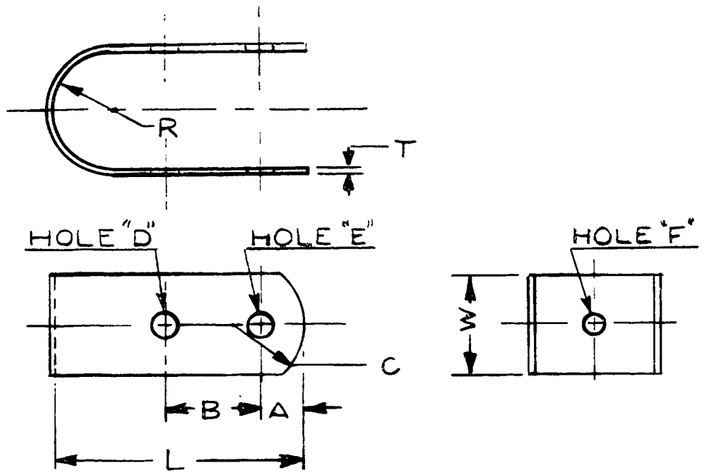

PART NO.	L	W	A	B	C	R	T	HOLE D	HOLE E	HOLE F	REMARKS
81332-2	31/32	3/8	3/16	3/8	1/2	3/32	.032	#30	#40	#52	WAS PART #4061
81332-3	1 13/16	3/4	5/16	—	1/2	7/16	.045	—	#11	—	WAS PART #507
81332-4	2	5/8	5/16	—	1/2	7/16	.045	—	#11	—	WAS PART #80961
81332-5	31/32	3/4	5/16	—	1/2	1/4	.062	—	#11	—	WAS PART #4141
81332-6	1 1/2	3/4	5/16	—	1/2	3/8	.045	—	#11	—	WAS PART #506
81332-7	27/32	3/8	3/8	—	1/2	5/32	.032	—	#30	#52	WAS PART #4060
81332-8	1 1/16	3/4	5/8	—	1/2	7/16	.062	—	1/4	—	WAS PART #218
81332-9	1 5/8	3/4	7/16	—	1/2	3/8	.062	—	.191	—	
81332-10	1 3/8	5/8	5/16	—	1/2	3/8	.062	—	.191	—	

PART NO.	L	W	A	B	C	R	T	HOLE D	HOLE E	HOLE F	REMARKS

NOTE: A PART CROSSED OUT IN THIS MANNER ~~00000~~ INDICATES PART IS OBSOLETE.

LET	REVISION	DATE	BY
C	REDRAWN WITHOUT CHANGE	6-22-51	C.B.
B	-10 ADDED	2-12-51	I.M.M.
A	-9 ADDED	11-21-46	B.C.

MODEL	PER PLANE	NEXT ASSEMBLY	SUPERSEDES	SUP. BY

THIS DRAWING IS THE PROPERTY OF THE PIPER AIRCRAFT CORP. AND ITS POSSESSION BY UNAUTHORIZED PERSONS SHALL NOT BE CONSTRUED AS PERMISSION TO REPRODUCE FOR SALE IN WHOLE OR IN PART ANY DEVICES SHOWN THEREON.

PIPER AIRCRAFT CORP.
LOCK HAVEN, PENNA.

#1025 STEEL
UNLESS OTHERWISE SPECIFIED

PART NO. | NO. REQ. | MATERIAL

SCALE | TOTAL WT.—LBS.

FINISH—PIPER SPECIFICATION # 10

MANUFACTURING PRACTICES—PIPER SPECIFICATION # 9

CLAMPS- U

DRAFTSMAN	CHECKER	STANDARDS
W.E.S. 8-29-41	R.R.B. 9-3-41	

81332

677

A677

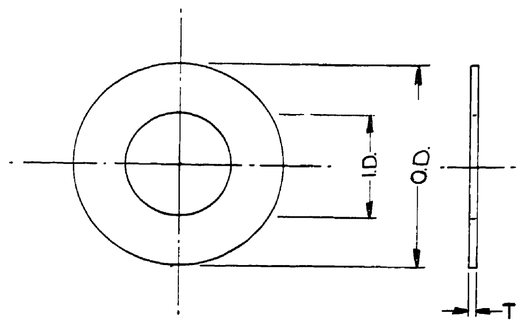

PART NO.	O.D.	I.D.	T.	MATERIAL	REMARKS	DATE ADDED
81342-2	1	3/8	.030 .050	PYRALIN	WAS 1082 & 80531-9	
81342-3	3	2 1/4	.030	PYRALIN	WAS G102 & 80531-11	
81342-4	9	7	.050	PYRALIN	WAS 80531-13	
81342-5	1 1/8	.375 .385	.062	#1025 STEEL	PURCHASED-CADMIUM PLATED	
81342-6	1/2	#18 DRILL	.032	#1025 STEEL		
81342-7	1 1/16	#11 DRILL	.062	#1025 STEEL	WAS J3-325	
81342-8	5/8	.313 .323	.032	#1025 STEEL		
81342-9	9/16	#11 DRILL	.062	#1025 STEEL		
81342-10	3/4	.170	.062	#1025 STEEL		
81342-11	1 1/4	.213 .223	.045	#1025 STEEL		
81342-12	21/32	21/64	.125	#1025 STEEL	WAS E2-83	
81342-13	1/2	.191	.062	#1025 STEEL		
81342-14	3/4	.516	.125	#1025 STEEL		
81342-15	1/2	7/32	.020	STAINLESS STL.	WAS 8071	
81342-16	1/2	.141	.020	STAINLESS STL.	WAS 8068	
81342-17	1 3/4	.641	.125	#1025 STEEL		
81342-18	7/16	.191	.045	#1025 STEEL	PURCHASED-CADMIUM PLATED	2-4-42
81342-19	1/2	#11 DRILL	.032	#1025 STEEL		2-4-42
81342-20	3/4	5/16	.032	VELLUMOID	PURCHASED-WAS J2-833	3-12-42
81342-21	3/4	.157	.032	#1025 STEEL		3-18-42
81342-22	1 1/4	.448	.062	FIBRE		4-10-42
81342-23	5/8	1/4	5/16	RUBBER, SHORE HARDNESS #35 TO #60	PURCHASED	5-8-42
81342-24	3/4	.191	.062	#1025 STEEL		6-2-42
81342-25	1/2	5/32	.062	FIBRE		6-10-42
81342-26	2 5/16	1 1/2	.094	CORK OR LEATHER		6-12-42
81342-27	5/8	#19 DRILL	.062	#1025 STEEL		7-1-42
81342-28						
81342-29	7/16	9/32	.062	#1025 STEEL		7-1-42
81342-30	1	5/16	.095	#1025 STEEL		7-2-42
81342-31	1 5/8	7/8	.062	#1025 STEEL		7-16-42
81342-32	1 1/2	7/8	.062	FIBRE	MADE FROM 80122-43	7-17-42
81342-33	1 1/8	5/8	.045	#1025 STEEL		7-17-42

PART NO.	O.D.	I.D.	T.	MATERIAL	REMARKS	DATE ADDED
81342-34	1 1/8	1/2	.062	#1025 STEEL		7-20-42
81342-35	5/8	#18 DRILL	.062	#1025 STEEL		8-24-42
81342-36	3/4	1/4	5/16	RUBBER, SHORE HARDNESS #35 TO #60		10-9-42
81342-37	1 1/2	7/16	1/4	THERMOID	PURCHASED, WAS 7056	10-9-42
81342-38	1.75	.53	.16	#1025 STEEL	FURNISHED BY LYCOMING DIVISION THE AVIATION CORP. WILLIAMSPORT, PA.	11-12-42
81342-39	1 7/8	1 7/16	.095	SHEET CORK		11-18-42
81342-40	1/2	.170	.032	#1025 STEEL		2-9-43
81342-41	1	.166	.032	#1025 STEEL		2-26-43
81342-42	.563	.250	.032	#1025 STEEL	PURCHASED-CADMIUM PLATED	3-3-43
81342-43	1	.191	.062	#1025 STEEL		3-25-43
81342-44	3/8	.141	.045	#1025 STEEL		4-6-43
81342-45	1 3/8	.141	.032	3S-1/2 H ALUM.		4-10-43
81342-46	.438	.191	.032	#1025 STEEL		5-12-43
81342-47	1 1/4	.579	.125	#1025 STEEL		5-29-43
81342-48	2 3/8	.141	.032	3S-1/2 H ALUM.		6-21-43
81342-49	2 1/16	.141	.032	3S-1/2 H. ALUM.		6-21-43
81342-50	1 1/4	.516	.062	#1025 STEEL		6-28-43
81342-51	1 1/4	.579	.062	#1025 STEEL		6-28-43
81342-52	1	.191	.032	3S-1/2 H ALUM.		7-19-43
81342-53	1 1/4	7/16	.062	#1025 STEEL		9-20-43
81342-54	1 1/4	7/16	.125	#1025 STEEL		9-20-43

PART NO.	O.D.	I.D.	T.	MATERIAL	REMARKS	DATE ADDED

NOTE:
A PART NO. CROSSED OUT IN THIS MANNER
0000 INDICATES PART IS OBSOLETE.

THIS DRAWING IS THE PROPERTY OF THE PIPER AIRCRAFT CORP. AND ITS POSSESSION BY UNAUTHORIZED PERSONS SHALL NOT BE CONSTRUED AS PERMISSION TO REPRODUCE FOR SALE, IN WHOLE OR IN PART. ANY DEVICES SHOWN THEREON

LET.	REVISION	DATE	BY
O	REDRAWN & REVISED	6-25-51	M.G.

MODEL	PER PLANE	NEXT ASSEMBLY	SUPERSEDES	SUP. BY

PIPER AIRCRAFT CORP.
LOCK HAVEN, PENNA.

NOTED

PART NO. | NO. REQ. | MATERIAL

SCALE | TOTAL WT.-LBS.

FINISH-PIPER SPECIFICATION #10

MANUFACTURING PRACTICES-PIPER SPECIFICATION #9

WASHERS SHEET II

DRAFTSMAN	CHECKER	STANDARDS
M.W.G. 6-25-51	I.E.M. 6-28-51	

81342

820

A820

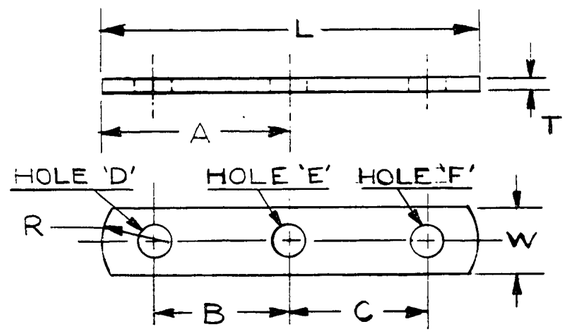

PART NO.	L	W	T	R	A	B	C	HOLE 'D'	HOLE 'E'	HOLE 'F'	MAT'L.	REMARKS
81352-2	1 3/8	1/2	.095	1/2	11/16	3/8	3/8	.191	.191	.191	#1025 STEEL	WAS 4144
81352-3	1 5/8	5/8	.045	1/2	13/16	5/8	5/8	.129	.250/.255	.129	#1025 STEEL	WAS 60
81352-4	1 1/4	5/8	.045	1/2	5/8	7/16	7/16	.098	.375	.098	#1025 STEEL	WAS 61
81352-5	7'1/4	5/8	.062	1/2	3 3/4	3 3/8	3'1/8	.191	.191	.191	#1025 STEEL	
81352-6	2 5/16	5/8	.045	1/2	1 5/32	25/32	25/32	.191	.191	.191	#1025 STEEL	WAS J3-442
81352-7	2	1/2	.095	1/4	1	13/16	13/16	.141	.250/.255	.141	#1025 STEEL	WAS J3-279
81352-8	2 1/2	3/4	.095	1/2	1 1/8	3/4	1	.170	.189/.191	.170	#1025 STEEL	WAS 4182 & 81262-15
81352-9	1 5/8	5/8	.045	1/2	1	3/4	3/8	.250/.255	.129	.129	#1025 STEEL	
81352-10	1 7/8	1/2	.045	1/2	1	5/8	5/8	.313	.191	.191	#1025 STEEL	
81352-11	2 1/8	11/16	.062	3/8	1 1/16	3/4	3/4	.191	.191	.191	#1025 STEEL	
81352-12	2 3/8	3/4	.062	3/8	1 3/16	13/16	13/16	.191	.390	.191	#1025 STEEL	
81352-13	2 1/8	11/16	.062	3/8	1 1/16	3/4	3/4	.191	.250	.191	#1025 STEEL	
81352-14	3 1/8	3/4	.062	1/2	1 9/16	13/16	13/16	.191	.191	.191	#1025 STEEL	

PART NO.	L	W	T	R	A	B	C	HOLE 'D'	HOLE 'E'	HOLE 'F'	MAT'L.	REMARKS

SEE ALSO DWG. 81262

LET	REVISION	DATE	BY
L	REDRAWN & REVISED	6-22-51	C.B.

MODEL	PER PLANE	NEXT ASSEMBLY	SUPERSEDES	SUP. BY

THIS DRAWING IS THE PROPERTY OF THE PIPER AIRCRAFT CORP. AND ITS POSSESSION BY UNAUTHORIZED PERSONS SHALL NOT BE CONSTRUED AS PERMISSION TO REPRODUCE FOR SALE IN WHOLE OR IN PART ANY DEVICES SHOWN THEREON.

PIPER AIRCRAFT CORP.
LOCK HAVEN, PENNA.

PART NO.	NO. REQ.	MATERIAL

SCALE | TOTAL WT.—LBS.

FINISH—PIPER SPECIFICATION # 10

MANUFACTURING PRACTICES—PIPER SPECIFICATION # 9

LINKS (SHEET II)

DRAFTSMAN	CHECKER	STANDARDS
C.E.B. 6-22-51	I.E.M. 6-28-51	

81352

A678

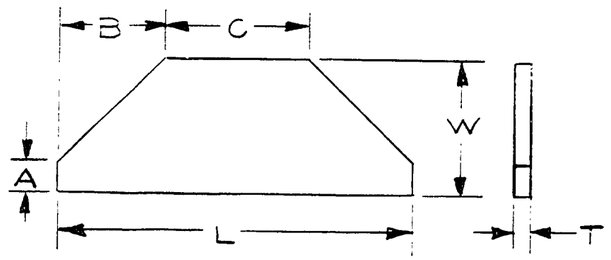

	PART NO.	L	W	T	A	B	C	MAT'L.	REMARKS
A	~~81362-2~~	~~6~~	~~2 3/4~~	~~.020~~	~~7/8~~	~~1 1/2~~	~~3~~	~~ESH ALUM.~~	~~WAS 434~~
	81362-3	5	1	.062	3/16	1 1/2	2	#1025 STEEL	WAS J2-315 & 30341
	81362-4	3 7/8	1	.062	3/16	13/16	2 1/4	#1025 STEEL	WAS 30081
B	81362-5	1 5/8	1 13/32	.025	21/32	9/16	1/2	3S 1/2 H ALUM.	WAS 4172
	81362-6	8	4 1/8	.025	1 1/4	2 3/16	3 5/8	3S 1/2 H ALUM.	WAS E2-554
C	81362-7	4 5/8	1 1/2	.045	3/16	1 1/16	2 1/2	#1025 STL.	CODE NO. 128 821
	81362-8	4 3/16	1	.045	3/16	1 11/32	1 1/2	#1025 STL.	CODE NO. 128 821
	81362-9	6 1/4	1	.062	1/4	1	4 1/4	#1025 STL.	
	81362-10	5 1/2	3/4	.095	3/16	1	3 1/2	#1025 STL.	
	81362-11	3 7/8	1 1/8	.045	3/16	1 5/16	1 1/4	#1025 STL.	

PART NO.	L	W	T	A	B	C	MAT'L	REMARKS

NOTE: A PART NO. CROSSED OUT IN THIS MANNER ~~00000~~ INDICATES PART IS OBSOLETE.

LET	REVISION	DATE	BY
H	REDRAWN WITHOUT CHNG.	6-25-51	C.B.
G	-11 ADDED	6-30-50	C.K.
F	-10 ADDED	9-9-49	C.E.K.
E	ON-9 W WAS 1/4; B WAS 13/16; C WAS 3 1/2	7-29-47	H.R.K.
D	-9 ADDED	5-6-47	I.M.M.
C	-7 & -8 ADDED	2-11-47	T.N.K.
B	-5 REDIMENSIONED	10-20-42	M.G.S.
A	-2 DELETED	9-16-42	R.E.S.

MODEL	PER PLANE	NEXT ASSEMBLY	SUPERSEDES	SUP. BY

THIS DRAWING IS THE PROPERTY OF THE PIPER AIRCRAFT CORP. AND ITS POSSESSION BY UNAUTHORIZED PERSONS SHALL NOT BE CONSTRUED AS PERMISSION TO REPRODUCE FOR SALE IN WHOLE OR IN PART ANY DEVICES SHOWN THEREON.

PIPER AIRCRAFT CORP.
LOCK HAVEN, PENNA.

PART NO.	NO. REQ.	MATERIAL

SCALE | TOTAL WT.—LBS.

FINISH—PIPER SPECIFICATION # 10

MANUFACTURING PRACTICES—PIPER SPECIFICATION # 9

PLATES

DRAFTSMAN	CHECKER	STANDARDS
V.F. 9-3-41	R.C.M. 9-5-41	

81362

679

A679

B

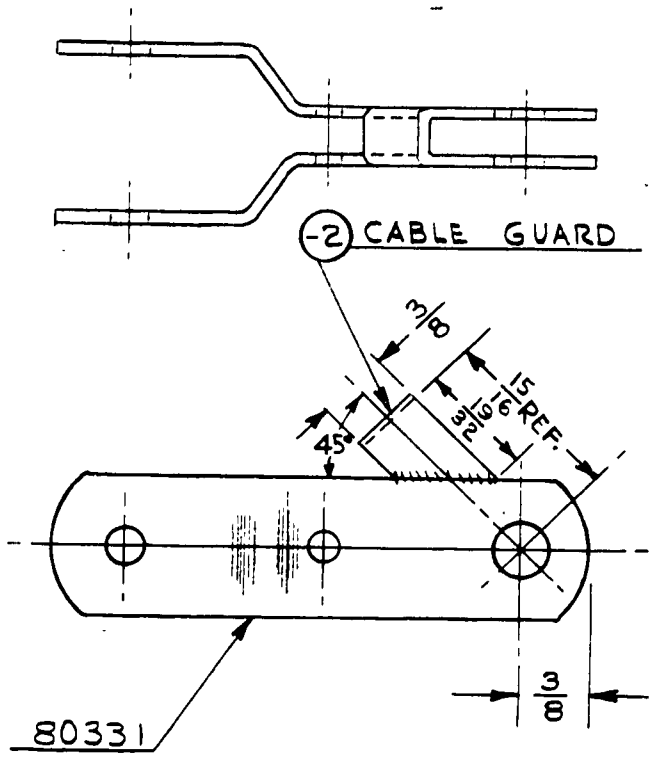

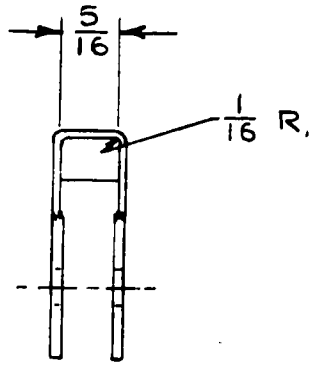

B

* NOTE: OPTIONAL EQUIPMENT FOR MODEL J3
PARTS MARKED Δ ALSO ON 91388 (MODEL L-14)

MODEL	PER PLANE	NEXT ASSEMBLY	SUPERSEDES	SUP. BY
J5D	1	80352		
J5C	1	10450		
HE-1	1	80352		
J5	1	80352		
*43	1	80352		

LET	REVISION	DATE	BY
E	REDRAWN WITHOUT CHANGE	6-1-51	I.MM
D	J5C N.A. 10450 WAS 80352	1-14-46	B.B.C
C	L-14 MODEL REF. ADDED FOR-2	7-3-45	H.M.Z
B	.045 REM.-2 TITLE ADDED	12-15-43	L.R.
A	NOTE ADDED	10-25-46	R.E.S.

THIS DRAWING IS THE PROPERTY OF THE PIPER AIRCRAFT CORP. AND ITS POSSESSION BY UNAUTHORIZED PERSONS SHALL NOT BE CONSTRUED AS PERMISSION TO REPRODUCE FOR SALE IN WHOLE OR IN PART ANY DEVICES SHOWN THEREON.

PIPER AIRCRAFT CORP.
LOCK HAVEN, PENNA.

PART NO.	NO. REQ.	SIZE	DESCRIPTION. MATERIAL
80331	2	PLATE	
-2	1	.045 x 3/8 x 1 5/8	#1025 STEEL

SCALE FULL SIZE | TOTAL WT.—LBS.
FINISH—PIPER SPECIFICATION # 10
MANUFACTURING PRACTICES—PIPER SPECIFICATION # 9

HOUSING ASS'Y.— BUNGEE PULLEY

DRAFTSMAN	CHECKER	STANDARDS
W.E.S. 9-9-41	R.R.B. 9-9-41	

81381

367

A367

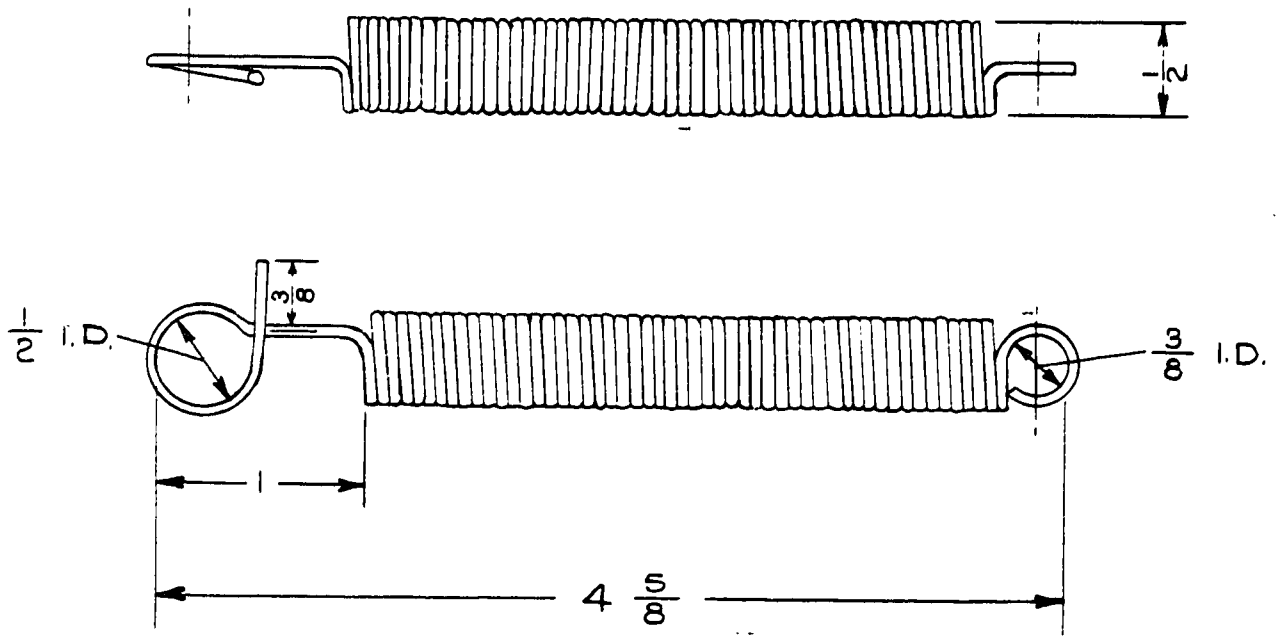

81411 SHOWN

81411-2 SAME AS 81411 EXCEPT CADMIUM PLATED.

* NOTE: OPTIONAL EQUIPMENT FOR MODEL J3

MODEL	PER PLANE	NEXT ASSEMBLY	SUPERSEDES	SUP. BY
J5	1	80352		
J5D	1	80352		
J5C	1	10450		
HE-1	1	80352		
* J3	1	80352		

LET	REVISION	DATE	BY
E	REDRAWN WITHOUT CHANGE	6-4-51	I.M.M.
D	-2 ADDED	4-13-50	C.K.
C	J5C N.A. 10450 WAS 80352	1-14-46	B.C.
B	16 GA. REM. FROM B.M.	12-15-43	L.R.
A	NOTE ADDED	10-25-43	R.E.S.

THIS DRAWING IS THE PROPERTY OF THE PIPER AIRCRAFT CORP. AND ITS POSSESSION BY UNAUTHORIZED PERSONS SHALL NOT BE CONSTRUED AS PERMISSION TO REPRODUCE FOR SALE IN WHOLE OR IN PART ANY DEVICES SHOWN THEREON.

PIPER AIRCRAFT CORP.
LOCK HAVEN, PENNA.

PART NO.	NO. REQ.	SIZE	DESCRIPTION
		.062 DIA.	SPRING STEEL
		MATERIAL	

SCALE FULL SIZE | TOTAL WT.—LBS.

FINISH—PIPER SPECIFICATION # 10

MANUFACTURING PRACTICES—PIPER SPECIFICATION # 9

SPRING — BUNGEE

DRAFTSMAN	CHECKER	STANDARDS
W. E. S. 9-8-41	R. R. B. 9-9-41	

81411

368

A368

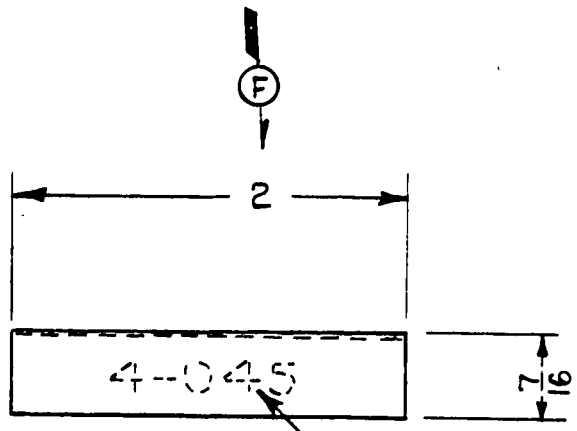

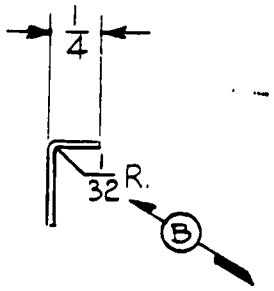

SERIAL NUMBERS STAMPED ON WITH 3/16" DIES.









LET	REVISION	DATE	BY
G	REDRAWN WITHOUT CHANGE	6-4-51	I.M.M.
F	2 DIM. WAS 1 1/2	12-20-44	I.M.M.
E	L-14 MODEL REF. ADDED	7-3-45	H.M.Z.
D	H.R.STL. WAS BLACK IRON	12-14-43	R.D.R.
C	JSC NEXT ASSY. 24056 WAS 23601	11-4-43	J.E.C.
B	1/32 R. ADDED	6-23-43	H.J.G.
A	3/16" WAS 1/8"	2-20-42	C.L.W.

MODEL	PER PLANE	NEXT ASSEMBLY	SUPERSEDES	SUP. BY
L-14	1	20100		
J5D,J5E1	1	23601		
J5C	1	24056		
TG8	1	21002		
L-4B	1	21002		
L-4A	1	21002		
J3	1	21002	D26-A	

THIS DRAWING IS THE PROPERTY OF THE PIPER AIRCRAFT CORP. AND ITS POSSESSION BY UNAUTHORIZED PERSONS SHALL NOT BE CONSTRUED AS PERMISSION TO REPRODUCE FOR SALE IN WHOLE OR IN PART ANY DEVICES SHOWN THEREON.

PIPER AIRCRAFT CORP.
LOCK HAVEN, PENNA.

PART NO.	NO. REQ.	SIZE	DESCRIPTION
		.020 x 21/32 x 2	H.R. STEEL
		MATERIAL	

SCALE FULL SIZE | TOTAL WT.—LBS.

FINISH—PIPER SPECIFICATION # 10

MANUFACTURING PRACTICES—PIPER SPECIFICATION # 9

PLATE — FUSELAGE SERIAL NUMBER

F.E.	R.C.M.	STANDARDS
10-10-41	10-13-41	
DRAFTSMAN	CHECKER	

81651

3 69

A369

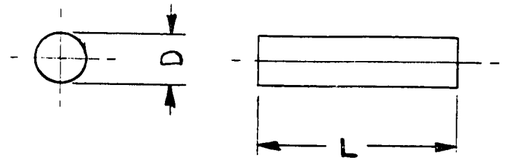

PART NO.	D	L	OLD PART#	REMARKS
81761-2	3/32	5/16	40381-2	
81761-3	1/8	9/16	J3-429	
81761-4	1/8	7/8	J3-426	
81761-5	3/32	2 1/4		
81761-6	3/32	18 3/4	40622-4	ADDED 3-17-42
81761-7	1/16	14 1/2		ADDED 3-18-42
81761-8	1/16	23 3/4		ADDED 3-18-42
81761-9	1/8	3 27/32		ADDED 5-6-42
81761-10	1/8	25/32		ADDED 7-1-42
81761-11	1/8	.570		ADDED 6-23-43
81761-12	1/16	14	70863-4	ADDED 8-31-43
81761-13	.078	11 3/4	72473-6	ADDED 9-2-43
81761-14	.078	9 1/2	72473-7	ADDED 9-2-43
81761-15	.078	21	72543-7	ADDED 9-2-43
81761-16	.078	17 3/4	72543-6	ADDED 9-2-43
81761-17	.078	9 3/4	72543-8	ADDED 9-2-43
81761-18	.078	8 1/2	72473-8	ADDED 9-2-43
81761-19	.078	21 1/4	73203-6	ADDED 9-17-43
81761-20	.078	19	73203-5	ADDED 9-17-43
81761-21	.078	14	73293-5	ADDED 10-7-43
81761-22	1/8	3/4		ADDED 10-26-43
81761-23	3/32	22 1/2		ADDED 9-7-44
81761-24	3/32	14 3/4		ADDED 9-7-44
81761-25	3/32	16 3/4		ADDED 9-7-44
81761-26	1/8	3 1/2		
81761-27	3/16	8		

PART NO.	D	L	OLD PART#	REMARKS
81761-28	1/8	5 7/8		
81761-29	.078	11 1/4		
81761-30	.090	2 5/8		
81761-31	1/8	16 5/8		
81761-32	3/32	20		
81761-33	.090	30		
81761-34	.090	28 3/4		

PART NO.	D	L	OLD PART#	REMARKS

NOTE: SEE ALSO DWG. 86092

LET	REVISION	DATE	BY
H	REDRAWN & REVISED	6-19-51	C.K.

MODEL	PER PLANE	NEXT ASSEMBLY	SUPERSEDES	SUP. BY

THIS DRAWING IS THE PROPERTY OF THE PIPER AIRCRAFT CORP. AND ITS POSSESSION BY UNAUTHORIZED PERSONS SHALL NOT BE CONSTRUED AS PERMISSION TO REPRODUCE FOR SALE IN WHOLE OR IN PART ANY DEVICES SHOWN THEREON.

PIPER AIRCRAFT CORP.
LOCK HAVEN, PENNA.

PART NO.	NO. REQ.	NOTED	#1010 C.F. STEEL WIRE
		SIZE	DESCRIPTION
			MATERIAL

SCALE — TOTAL WT.—LBS.

FINISH—PIPER SPECIFICATION # 10

MANUFACTURING PRACTICES—PIPER SPECIFICATION # 9

PINS & RODS
(SHEET I)

DRAFTSMAN	CHECKER	STANDARDS
C. E. K. 6-19-51	H. R. K. 6-22-51	

81761

A680

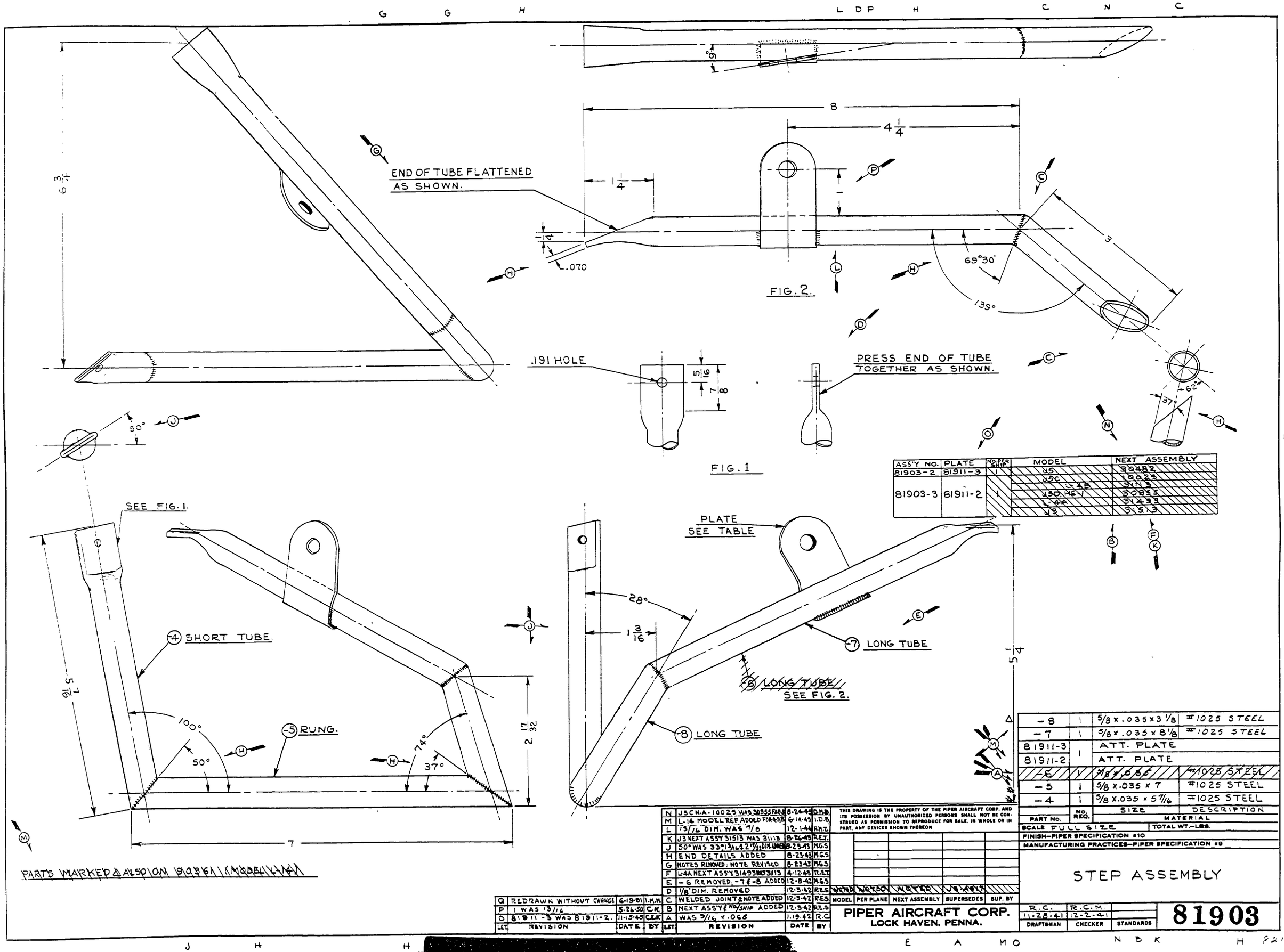

ASS'Y NO.	PLATE	NO. PER SHIP	MODEL	NEXT ASSEMBLY
81903-2	81911-3	1	J5	30482
			J5C	10023
81903-3	81911-2	1	L-4B	31113
			J5D, HE-1	30855
			L-4A	31433
			J3	31513

PART No.	NO. REQ.	SIZE	DESCRIPTION
-8	1	5/8 x .035 x 3 1/8	#1025 STEEL
-7	1	5/8 x .035 x 8 1/8	#1025 STEEL
81911-3	1	ATT. PLATE	
81911-2		ATT. PLATE	
~~-6~~	~~1~~	~~5/8 x .035~~	~~#1025 STEEL~~
-5	1	5/8 x .035 x 7	#1025 STEEL
-4	1	5/8 x .035 x 5 7/16	#1025 STEEL

MATERIAL

SCALE FULL SIZE — TOTAL WT.—LBS.

FINISH—PIPER SPECIFICATION #10

MANUFACTURING PRACTICES—PIPER SPECIFICATION #9

LET.	REVISION	DATE	BY
Q	REDRAWN WITHOUT CHANGE	6-19-51	I.M.M.
P	1 WAS 13/16	5-26-50	C.K.
O	81911-3 WAS 81911-2.	11-15-45	C.E.K.
N	J5CN-A-10025 WAS 30855 FOR J5	8-24-45	D.M.B.
M	L-14 MODEL REF ADDED FOR 4-5-8	6-14-45	I.D.B.
L	13/16 DIM. WAS 7/8	12-1-44	H.M.Z.
K	J3 NEXT ASS'Y 31513 WAS 31113	8-26-43	R.E.T.
J	50° WAS 33°, 13/16 & 2 17/32 DIM. ADDED	8-23-43	M.G.S.
H	END DETAILS ADDED	8-23-43	M.G.S.
G	NOTES REMOVED; NOTE REVISED	8-23-43	M.G.S.
F	L-4A NEXT ASS'Y 31493 WAS 31113	4-12-43	R.E.T.
E	-6 REMOVED; -7 & -8 ADDED	12-8-42	M.G.S.
D	1/8 DIM. REMOVED	12-3-42	R.E.S.
C	WELDED JOINT & NOTE ADDED	12-3-42	R.E.S.
B	NEXT ASS'Y & NO/SHIP ADDED	12-3-42	R.E.S.
A	WAS 9/16 x .065	1.19.42	R.C.

LET.	REVISION	DATE	BY

THIS DRAWING IS THE PROPERTY OF THE PIPER AIRCRAFT CORP. AND ITS POSSESSION BY UNAUTHORIZED PERSONS SHALL NOT BE CONSTRUED AS PERMISSION TO REPRODUCE FOR SALE, IN WHOLE OR IN PART, ANY DEVICES SHOWN THEREON

MODEL	PER PLANE	NEXT ASSEMBLY	SUPERSEDES	SUP. BY
NOTED	NOTED	NOTED	J3-4817	

PIPER AIRCRAFT CORP.
LOCK HAVEN, PENNA.

STEP ASSEMBLY

DRAFTSMAN	CHECKER	STANDARDS
R.C. 11-28-41	R.C.M. 12-2-41	

81903

A821

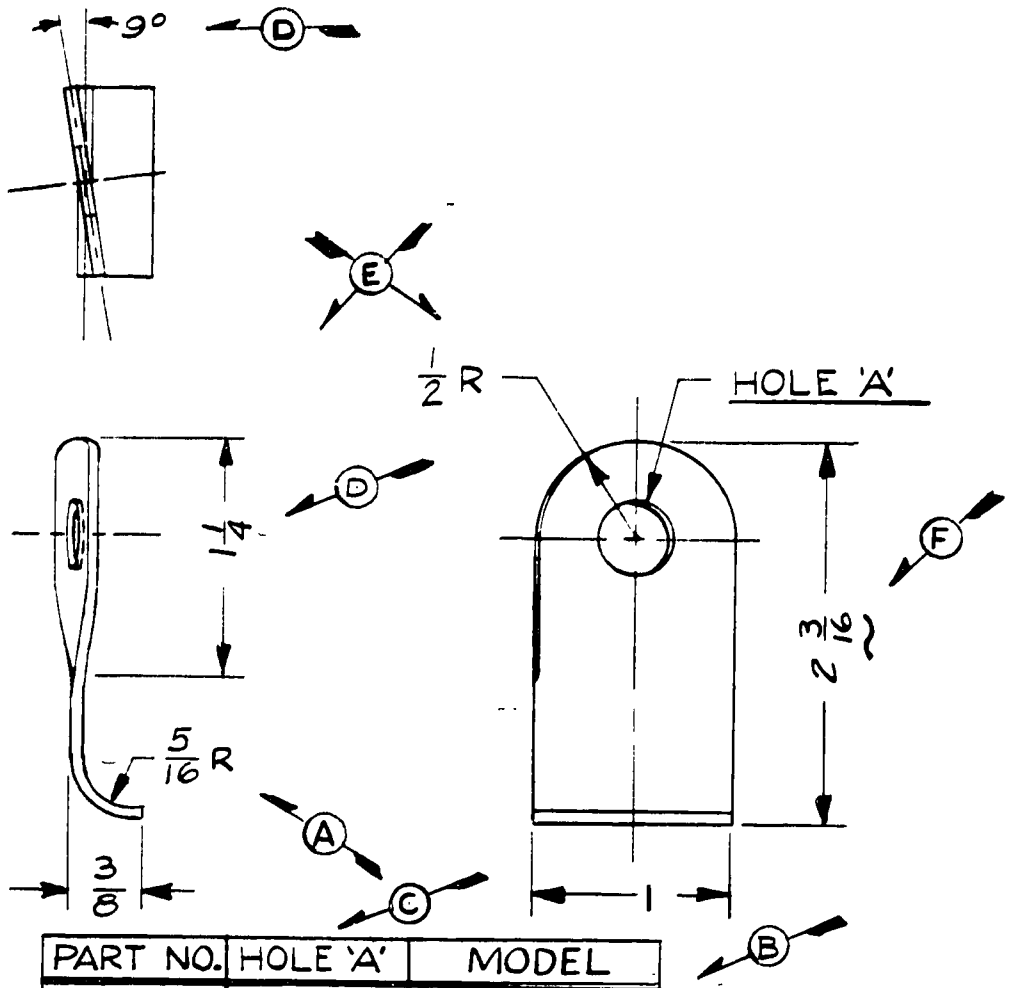

PART NO.	HOLE 'A'	MODEL
81911-2	.374 / .380	L-4A, J3, J5C, HE-1, L-18, J5D
81911-3	5/16	J5

LET	REVISION	DATE	BY
G	REDRAWN WITHOUT CHANGE	6-19-51	C.E.B.
F	2 3/16 WAS 2	5-24-50	C.K.
E	VIEWS REVISED	8-23-43	MGS.
D	1 1/4 DIA & 9° ANGLE ADDED	8-23-43	MGS.
C	.374 / .380 WAS 3/8	6-28-43	H.P.R.
B	L-4A WAS OPP. -3	12-3-42	RES.
A	5/16 R WAS 1/4 R	1-19-42	RCM

NOTED MODEL	PER PLANE	81903 NEXT ASSEMBLY	SUPERSEDES	SUP. BY

THIS DRAWING IS THE PROPERTY OF THE PIPER AIRCRAFT CORP. AND ITS POSSESSION BY UNAUTHORIZED PERSONS SHALL NOT BE CONSTRUED AS PERMISSION TO REPRODUCE FOR SALE IN WHOLE OR IN PART ANY DEVICES SHOWN THEREON.

PIPER AIRCRAFT CORP.
LOCK HAVEN, PENNA.

PART NO.	NO. REQ.	SIZE	DESCRIPTION / MATERIAL
		.062 x 1 x 2 3/8	#1025 STEEL

SCALE FULL SIZE — TOTAL WT.—LBS.
FINISH—PIPER SPECIFICATION # 10
MANUFACTURING PRACTICES—PIPER SPECIFICATION # 9

PLATE — STEP ATTACHING

DRAFTSMAN	CHECKER	STANDARDS
R.C. 12-1-41	R.C.M. 12-1-41	

81911

370

A370

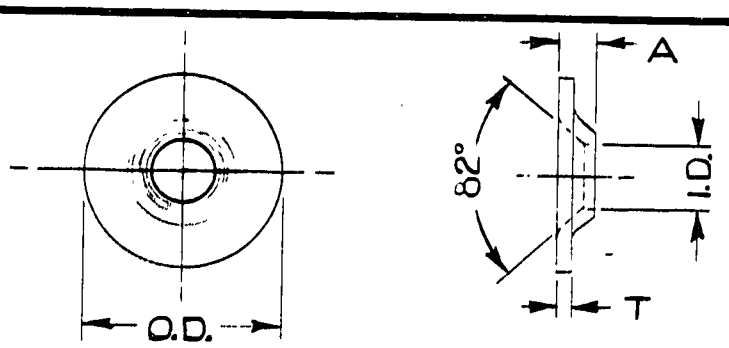

PART NO.	O.D.	I.D.	T	A	MODEL	PERSHIP	NEXT ASS'Y.	MATERIAL
82161-2	1	.217	.045	.125	L-4A	19	50503, 53603	STEEL CADMIUM PLATED
					L-4B	13	50503, 50473	
					J5C	2	24186	
					HE-1	12	52303, 52093	
					L-14	23	91300	
82161-3	1 1/8	.313	.062	.156				
82161-4	1 1/4	.313	.062	.188	HE-1	14	52303,	ST'L CAD. PLATED
					L-14	8	90500	
82161-5	2	.563	.012	.188				ST. STEEL
82161-6	2	.563	.018	.188				TERNEPLATE

LET	REVISION	DATE	BY
K	REDRAWN WITHOUT CHANGE	6-21-51	T.E.M.
J	.045 T. WAS .062, I.D. WAS 7/8, .217 I.D. WAS .188 FOR -2	4-7-47	J.M.M.
H	J5C PER SHIP 2 WAS 4 FOR -2	12-3-45	L.R.
G	J5C MODEL REF. ADDED FOR -2	10-16-45	C.R.D.
F	L-14 MODEL REF. ADDED FOR -2 & -4	6-14-45	R.D.R.
E	REDRAWN & REVISED	4-5-43	R.R.F.

MODEL	PER PLANE	NEXT ASSEMBLY	SUPERSEDES	SUP. BY
NOTED	NOTED	NOTED		

THIS DRAWING IS THE PROPERTY OF THE PIPER AIRCRAFT CORP. AND ITS POSSESSION BY UNAUTHORIZED PERSONS SHALL NOT BE CONSTRUED AS PERMISSION TO REPRODUCE FOR SALE IN WHOLE OR IN PART ANY DEVICES SHOWN THEREON.

PIPER AIRCRAFT CORP.
LOCK HAVEN, PENNA.

PART NO.	NO. REQ.	NOTED SIZE	NOTED DESCRIPTION
		MATERIAL	

SCALE | TOTAL WT.—LBS.

FINISH—PIPER SPECIFICATION # 10

MANUFACTURING PRACTICES—PIPER SPECIFICATION # 9

WASHERS—COUNTERSUNK

DRAFTSMAN	CHECKER	STANDARDS
R. FRANK 4-5-43	L.E.K. 4-10-43	

82161

3 71



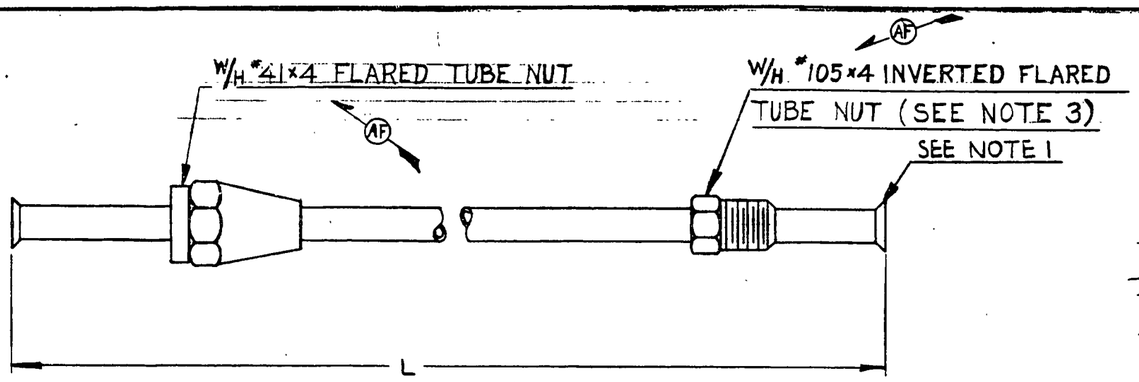

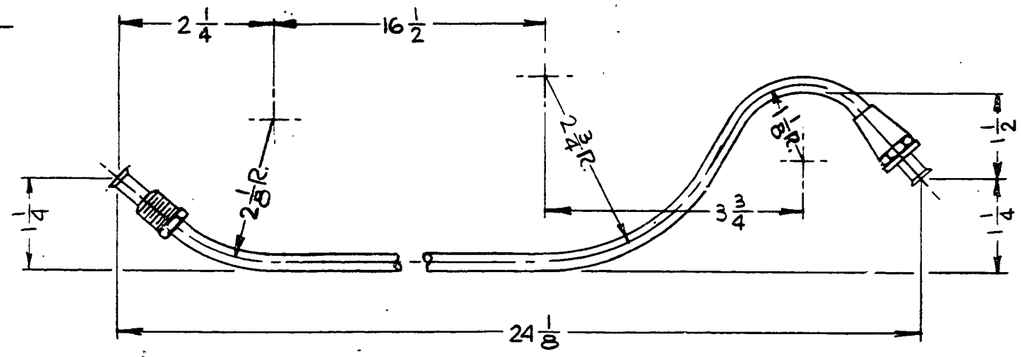

FIG. 1
HALF SIZE

ASSY. NO.	TUBE NO.	L	MODEL	PER SHIP	NEXT ASSEMBLY	REMARKS
82332-2	82332-3	26¼				FORMED AS SHOWN IN FIG. 1
82332-4	82332-5	34				-4 WAS A7284
82332-6	82332-7	25½				
82332-8	82332-9	4¼				
82332-10	82332-11	42				WAS A7239
82332-12	82332-13	30	J5C	1	75266	WAS A7265
82332-14	82332-15	27½	J5L-65	1	73066	WAS A7240
			J3S-65	1	72883	
82332-16	82332-17	53	J3F-65	1	73126	WAS A7305
82332-18	82332-19	26				WAS A4045
82332-20	82332-21	36	J5C	1	75266	
82332-22	82332-23	23½				
82332-24	82332-25	31				
82332-26	82332-27	17				
82332-28	82332-29	24				

ASSY. NO.	TUBE NO.	L	REMARKS
82332-30	82332-31	37½	

NOTES:
1. FLARES FORMED PER DWG. 82551.
2. 25-0 ALUMINUM TUBING MAY BE USED AS AN ALTERNATE FOR COPPER ON TUBE 82332-15.
3. USE W/H #41×4 IN PLACE OF W/H #105×4 FOR ASSEMBLY NUMBER 82332-18. & 82332-28.

"This drawing is the property of the Piper Aircraft Corp. and its possession by unauthorized persons shall not be construed as permission to reproduce for sale, in whole or in part, any devices shown thereon."

LET.	REVISION	DATE	BY
AF	W/H #41×4 WAS 84322; W/H #105×4 WAS 84352; NOTE 3 REVISED	6-18-51	HRK
AE	ON -26, 17 WAS 21	11-23-49	K.D.D.
AD	-30 ADDED	3-23-49	C.E.K.
AC	-26 & -28 ADDED	2-18-49	C.E.K.
AB	-24 ADDED	6-22-48	BC
AA	-22 ADDED	4-2-47	I.D.B.
Z	-20 ADDED	2-22-46	BC
Y	J5C MODEL REF. CAN. FOR -12	2-22-46	BC
X	REDRAWN & REVISED	11-21-45	L.R.

MODEL	PER PLANE	NEXT ASSEMBLY	SUPERSEDES	SUP. BY
NOTED	NOTED	NOTED		

PIPER AIRCRAFT CORP.
LOCK HAVEN, PENNA.

82551	DWG. REQ'D	TUBE END FLARES
	1	W/H #105×4 INVERTED FLARED TUBE NUT
	1	W/H #41×4 FLARED TUBE NUT
SEE TABLE	1	¼×.032×NOTED — COPPER TUBE (SEE NOTE 2)
	No. REQ.	SIZE — DESCRIPTION
PART NO.		MATERIAL

SCALE — TOTAL WT.–LBS.
FINISH–PIPER SPECIFICATION #10
MANUFACTURING PRACTICES–PIPER SPECIFICATION #9

TUBE ASSEMBLIES – ¼ DIA.

L.R.	R.E.T.	
11-21-45	11-23-45	
DRAFTSMAN	CHECKER	STANDARDS

82332

681

A681

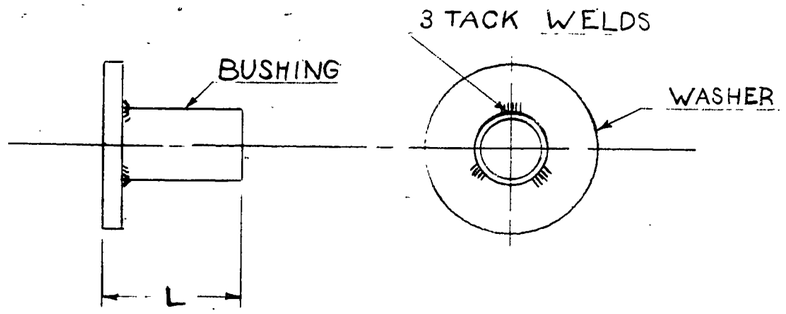

PART NO.	BUSHING	WASHER	L	REMARKS	MODEL	PER PLANE	NEXT ASSEMBLY
82341-2	86102-13	80122-31	1 1/16	WAS J2-A215 (20881-2)	J3C-65	8	71163, 24006
					J3L-65	8	74234, 24006
					J3F-65	8	74224, 24006
82341-3	80012-55	80122-31	1.375	WAS A259 (20881-3)	J3C-65	4	71163
82341-4	80022-3	80122-34	1 3/8	WAS J2-A216 (20881-4)			
82341-5	80022-5	81342-17	1.500	WAS (20881-5)			
82341-6	80012-40	80122-31	1.188				
82341-7	86102-9	80122-31	1.688		J5C	4	100 70
82341-8	86102-10	81342-17	2.000		J5C	4	100 70
82341-9	86102-14	80122-31	1 3/16				
82341-10	80022-29	85012-36	1.500				
82341-11	86102-20	85012-36	2.250				
82341-12	86102-21	85012-35	1.438				
82341-13	86102-87	85012-36	2.000				

"This drawing is the property of the Piper Aircraft Corp. and its possession by unauthorized persons shall not be construed as permission to reproduce for sale, in whole or in part, any devices shown thereon."

LET.	REVISION	DATE	BY
S	-13 ADDED	7-5-50	C.K.
R	2.250 WAS 2.000 FOR -11	4-8-47	E.L.N.
Q	-10-11-12 ADDED	2-7-47	L.R.
P	-9 ADDED	4-17-46	J.H.
O	86102-13 WAS 80012-38 & 1 1/16 WAS 1.000 FOR -2	3-25-46	C.L.W.
N	REDRAWN & REVISED	12-12-45	B.B.C.

NOTED NOTED NOTED

MODEL	PER PLANE	NEXT ASSEMBLY	SUPERSEDES	SUP. BY

PIPER AIRCRAFT CORP.
LOCK HAVEN, PENNA.

PART No.	NO. REQ.	MATERIAL
SCALE		TOTAL WT.—LBS.

FINISH—PIPER SPECIFICATION #10
MANUFACTURING PRACTICES—PIPER SPECIFICATION #9

BUSHING ASSEMBLIES

DRAFTSMAN	CHECKER	STANDARDS	
B.B.C. 12-12-45	E.E.T. 12-13-45		82341

6822

A682

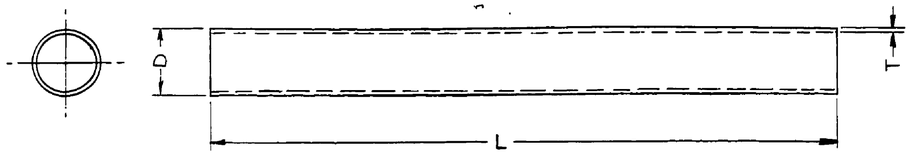

PART NO.	D	T	L	MATERIAL	OLD PART	REMARKS
82352-2	5/8	.028	14½	#1025 STEEL	J2-66	
82352-3	1⅛	.035	34¾	#4130 STEEL	30452-3	R.H. ONLY
82352-4	1⅛	.035	34¾	#4130 STEEL	30452-2	L.H. ONLY
82352-5	1¼	.058	26 13/16	#4130 STEEL	30452-6	
82352-6	½	.028	3¼	#1025 STEEL	2063	L.H. ONLY
82352-7	½	.028	4 5/16	#1025 STEEL	2064	R.H ONLY
82352-8	½	.028	3¾	#1025 STEEL	2065	L.H. ONLY
82352-9	½	.035	20¼	#1025 STEEL		
82352-10	½	.035	14½	#1025 STEEL		
82352-11	½	.035	11	#1025 STEEL		
82352-12	3/8	.035	8¼	#1025 STEEL		
82352-13	½	.035	14⅝	#1025 STEEL		
82352-14	5/8	.035	76	#1025 STEEL		
82352-15	3/8	.035	3¾	#1025 STEEL		
82352-16	3/8	.028	8½	#1025 STEEL		
82352-17	½	.028	13¾	#1025 STEEL		
82352-18	½	.035	21	#1025 STEEL		
82352-19	5/8	.035	21⅛	#1025 STEEL	2104	
82352-20	5/8	.035	17⅛	#1025 STEEL	2101-L	L.H. ONLY
82352-21	¾	.049	13 7/16	#1025 STEEL	2102	
82352-22	¾	.035	23½	#1025 STEEL	2103-L	L.H. ONLY
82352-23	¾	.035	9 5/16	#1025 STEEL	2105	
82352-24	¾	.065	12¼	#1025 STEEL	2637-L	L.H. ONLY
82352-25	¾	.065	12¼	#1025 STEEL	2637-R	R.H. ONLY
82352-26	5/8	.035	17⅛	#1025 STEEL	2101-R	R.H. ONLY
82352-27	¾	.035	23½	#1025 STEEL	2103-R	R.H. ONLY
82352-28	1⅛	.035	34⅞	#4130 STEEL	82352-4	L.H. ONLY
82352-29	1⅛	.035	34⅞	#4130 STEEL	82352-3	R.H. ONLY
82352-30	½	.028	10 1/16	#1025 STEEL	51013-4	
82352-31	½	.028	2 1/16	#1025 STEEL	51013-5	
82352-32	½	.028	13 9/16	#1025 STEEL	51013-6	
82352-33	½	.028	3¾	#1025 STEEL	82352-8	R.H. ONLY
82352-34	½	.028	4 5/16	#1025 STEEL	82352-7	L.H. ONLY

PART NO.	D	T	L	MATERIAL	OLD PART	REMARKS
82352-35	½	.028	3¼	#1025 STEEL	82352-6	R.H. ONLY
82352-36	7/8	.035	5¼	#1025 STEEL		
82352-37	1¼	.058	26 13/16	#4130 STEEL		
82352-38	1⅛	.035	34⅞	#4130 STEEL		L.H. ONLY
82352-39	1⅛	.035	34⅞	#4130 STEEL		R.H. ONLY
82352-40	1⅜	.058	26 13/16	#4130 STEEL		
82352-41	1¼	.058	34⅞	#4130 STEEL		RH. ONLY
82352-42	1¼	.058	34⅞	#4130 STEEL		L.H. ONLY
82352-43	7/8	.049	6	#1025 STEEL		
82352-44	7/8	.049	6	#1025 STEEL		

PART NO.	D	T	L	MATERIAL	OLD PART	REMARKS

NOTE:
BLANK LENGTHS SHOWN. ENDS TO BE NIBBLED OR CUT TO FIT.
RIGHT AND LEFT HAND PARTS TO BE NIBBLED OR CUT OPPOSITELY.

SEE ALSO DWG'S. 84952 & 80132

THIS DRAWING IS THE PROPERTY OF THE PIPER AIRCRAFT CORP. AND ITS POSSESSION BY UNAUTHORIZED PERSONS SHALL NOT BE CONSTRUED AS PERMISSION TO REPRODUCE FOR SALE, IN WHOLE OR IN PART, ANY DEVICES SHOWN THEREON

LET.	REVISION	DATE	BY
h	REDRAWN & REVISED	6-26-51	M.G.

MODEL	PER PLANE	NEXT ASSEMBLY	SUPERSEDES	SUP. BY

PIPER AIRCRAFT CORP.
LOCK HAVEN, PENNA.

PART No.	NO. REQ.	NOTED
		MATERIAL
SCALE		TOTAL WT.-LBS.

FINISH—PIPER SPECIFICATION #10
MANUFACTURING PRACTICES—PIPER SPECIFICATION #9

TUBES
(SHEET NO. 2)

DRAFTSMAN	CHECKER	STANDARDS
M.W.G. 6-26-51	I.E.M. 6-28-51	

82352

A822

A822

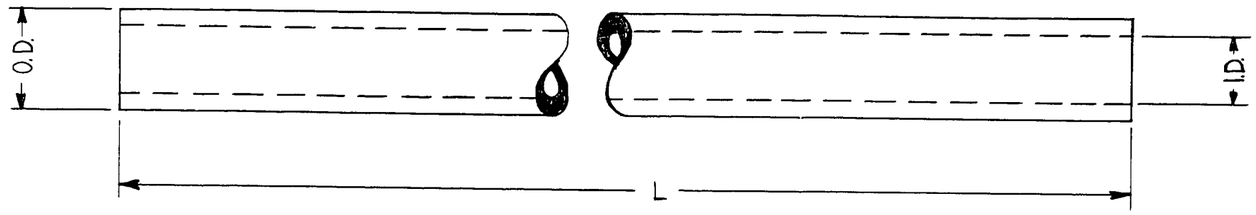

PART NO.	L	O. D.	I. D.	MATERIAL
82371-2	2 1/4	27/32	1/2	W/H HOSE TYPE 2812
82371-3	2 1/4	27/32	1/2	TYPE 36 HB PURCH. GATES RUBBER CO.
82371-4	3 3/4	3/4	3/8	ANH-26
82371-5	12	3/4	3/8	ANH-26
82371-6	6	5/8	1/4	ANH-26
82371-7	4	5/8	1/4	ANH-26
82371-8	4	1	5/8	ANH-26
82371-9	2	3/4	3/8	ANH-26
82371-10	6	3/4	3/8	ANH-26
82371-11	13	1	5/8	RUBBEEP AAF SPEC 26577 PURCH. GATES RUBBER CO
82371-12	1 1/8	3/4	3/8	ANH-26
82371-13	6 3/4	5/8	1/4	ANH-26
82371-14	9	3/4	3/8	ANH-26
82371-15	3	3/4	3/8	ANH-26

PART NO.	L	O. D.	I. D.	MATERIAL

PART NO.	L	O. D.	I. D.	MATERIAL

LET.	REVISION	DATE	BY
V	-15 ADDED	4-9-51	M.G.
U	-14 ADDED	2/13/51	M.G.
T	REDRAWN & REVISED	9-8-50	H.R.K.

MODEL	PER PLANE	NEXT ASSEMBLY	SUPERSEDES	SUP. BY

THIS DRAWING IS THE PROPERTY OF THE PIPER AIRCRAFT CORP. AND ITS POSSESSION BY UNAUTHORIZED PERSONS SHALL NOT BE CONSTRUED AS PERMISSION TO REPRODUCE FOR SALE, IN WHOLE OR IN PART, ANY DEVICES SHOWN THEREON.

PIPER AIRCRAFT CORP.
LOCK HAVEN, PENNA.

PART No.	No. REQ.	MATERIAL

SCALE — TOTAL WT.—LBS.

FINISH—PIPER SPECIFICATION #10

MANUFACTURING PRACTICES—PIPER SPECIFICATION #9

HOSE – FLEXIBLE

H. R. K.	C. E. K.		82371
9-8-50	9-13-50		
DRAFTSMAN	CHECKER	STANDARDS	

683

A683

WAS PART NO. J2-91

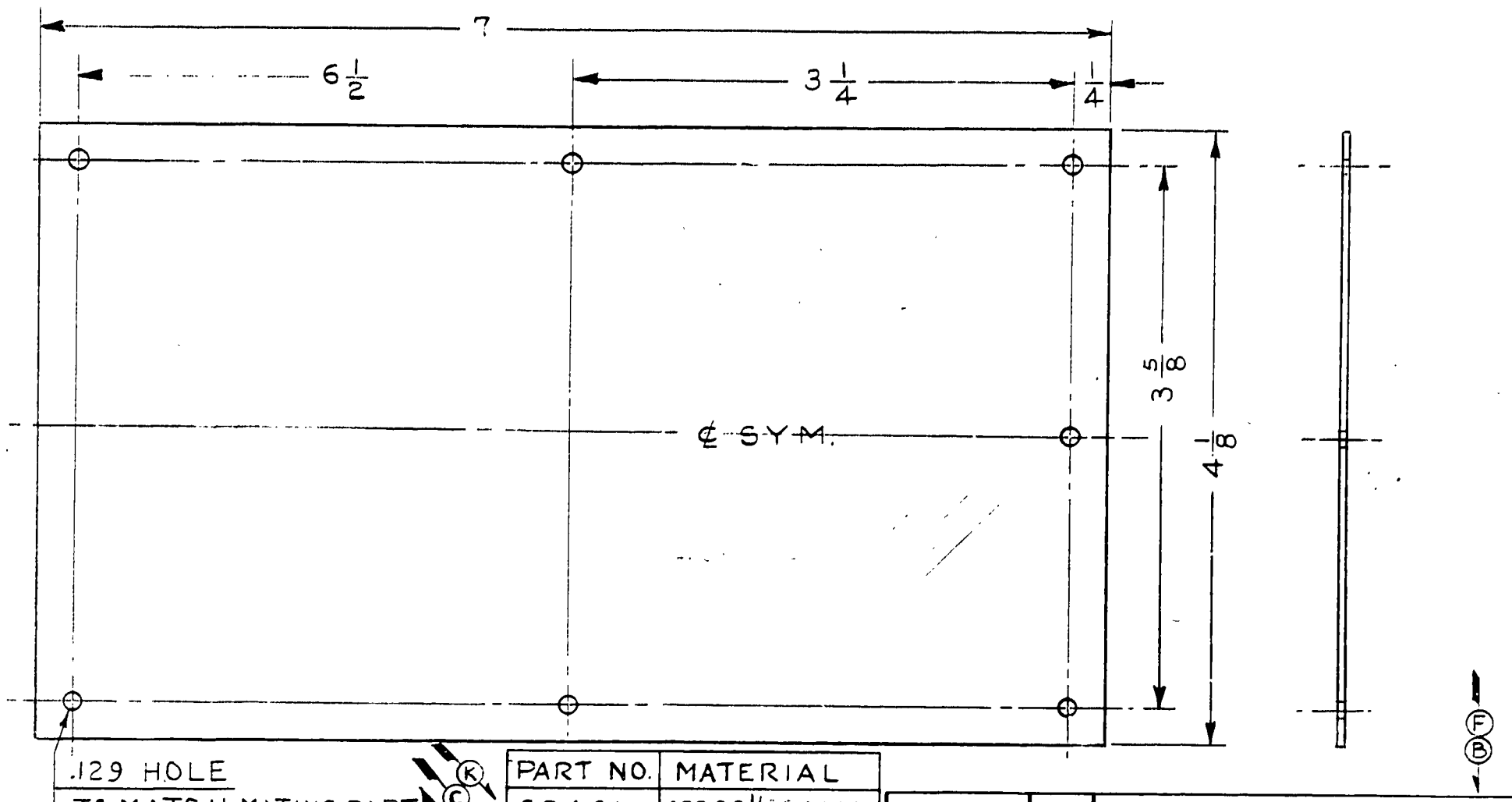

.129 HOLE
TO MATCH MATING PART
7 REQ.

K C A E D

PART NO.	MATERIAL
82461	.025 35 1/2H. ALUM.
82461-2	.050 CLEAR PYRALIN

LET.	REVISION	DATE	BY
L	REDRAWN WITHOUT CHANGE	5-24-51	L.M.M.
K	-2 ADDED	1-12-48	R.M.
J	PER SHIP 4 WAS 6 FOR J3	4-3-46	H.M.Z.
H	J5C MODEL REF. ADDED	3-26-46	C.E.K.
G	DIMENSIONS REVISED	2-13-46	C.E.K.
F	MAT. SPEC. REVISED	11-16-45	H.M.Z.
E	L-4A NEXT ASSY 24256 WAS 23876	6-26-44	R.D.R.
D	6 PER SHIP WAS 4 FOR J3	12-3-43	A.H.
C	N.A. 24176 ADDED FOR J3	12-3-43	A.H.
B	ALTERNATES ADDED	7-20-43	R.E.T.
A	L-4A NEXT ASSY 23876 WAS 22533	4-3-43	R.E.S.

MODEL	PER PLANE	NEXT ASSEMBLY	SUPERSEDES	SUP. BY
J5C	7	83483		
TG-8	4	13363		
L-4B	4	13363, 22533		
L-4A	4	13363, 24256		
J3	4	13363, 24324, 24176		

THIS DRAWING IS THE PROPERTY OF THE PIPER AIRCRAFT CORP. AND ITS POSSESSION BY UNAUTHORIZED PERSONS SHALL NOT BE CONSTRUED AS PERMISSION TO REPRODUCE FOR SALE, IN WHOLE OR IN PART. ANY DEVICES SHOWN THEREON.

PIPER AIRCRAFT CORP.
LOCK HAVEN, PENNA.

PART NO.	No. REQ.	SIZE	DESCRIPTION
		NOTED x 4 1/8 x 7	NOTED

MATERIAL

SCALE FULL SIZE — TOTAL WT.—LBS.

FINISH—PIPER SPECIFICATION #10

MANUFACTURING PRACTICES—PIPER SPECIFICATION #9

WINDOW — WING INSPECTION

DRAFTSMAN	CHECKER	STANDARDS
M. G. S. 4-2-42	J. C. B. 4-2-42	

82461

372

A372

WAS D8144-A

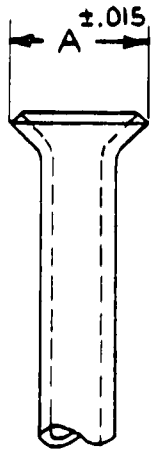

DIM. "A"	.190	.260	.350	.415	.484	.620
TUBE DIA.	1/8	3/16	1/4	5/16	3/8	1/2

LET	REVISION	DATE	BY
A	REDRAWN WITHOUT CHANGE	6-19-51	I.H.M.

ALL MODEL	PER PLANE	NEXT ASSEMBLY	SUPERSEDES	SUP. BY

THIS DRAWING IS THE PROPERTY OF THE PIPER AIRCRAFT CORP. AND ITS POSSESSION BY UNAUTHORIZED PERSONS SHALL NOT BE CONSTRUED AS PERMISSION TO REPRODUCE FOR SALE IN WHOLE OR IN PART ANY DEVICES SHOWN THEREON.

PIPER AIRCRAFT CORP.
LOCK HAVEN, PENNA.

PART NO.	NO. REQ.	MATERIAL

SCALE | TOTAL WT.—LBS.

FINISH—PIPER SPECIFICATION # 10

MANUFACTURING PRACTICES—PIPER SPECIFICATION # 9

FLARES — TUBE END

DRAFTSMAN	CHECKER	STANDARDS
H.R.K. 4-22-42	J.C.B. 4-22-42	

82551

373

A373

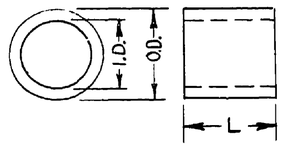

PART NO.	O. D.	I. D.	L	MAT'L.	REMARKS
82732-2	1×.058		3/8	MECH	
82732-3	1/2	.191	.188	#1025 STL.	
82732-4	1/2×.065		1 1/4	#1025 STL.	REMOVE BURRS
82732-5	1/2×.058		5/8	#4130 STL.	REMOVE BURRS
82732-6	5/8	1/2	9/32	#1025 STL.	
82732-7	9/16×.065		1 3/8	#1025 STL.	
82732-8	1/4×.028	.194	1/2	#1025 STL.	
82732-9	5/8	1/2	7/8	#1025 STL.	
82732-10	5/16×.028		3/4	#1025 STL.	
82732-11	7/8	3/4	3/4	#1025 STL.	
82732-12	3/4×.065		5/16	#1025 STL.	
82732-13	1/2	3/8	1/2	#1025 STL.	
82732-14	3/8×.083		15/16	#1010 STL.	
82732-15	3/8×.083		1 7/16	#1010 STL.	
82732-16	1 3/16	15/16	1/2	FIBRE	
82732-17	1/4×.028		.265	#1025 STL.	
82732-18	5/16×.028		1 3/4	#1025 STL.	
82732-19	5/16×.035	1/4	1 1/8	#1025 STL.	
82732-20	7/16×.083		1 1/2	MECH.TUBE	
82732-21	5/8×.065		11/32	#1025 STL.	
82732-22	5/8	.374/.380	3/8	C.R. STL.	
82732-23	.426	.377	1 7/16	#1025 STL.	
82732-24	5/8	.313	.344	C.R. STL.	
82732-25	1/4×.028		1/8	#1025 STL.	
82732-26	3/8×.083		1 3/16	#1010 STL	
82732-27	1/2×.065		1 7/16	#1025 STL.	
82732-28	3/8×.083		2	#1010 STL	
82732-29	5/8×.065		3/4	#1025 STL.	
82732-30	3/8×.035		5/8	#1025 STL.	
82732-31	3/8×.083		1 1/2	#1010 STL.	
82732-32	3/8×.083		1 1/8	#1010 STL.	
82732-33	9/16	.421/.426	1 3/4	#1025 STL.	
82732-34	5/16	.191	1/2	#1025 STL	

PART NO.	O.D.	I.D.	L	MAT'L	REMARKS
82732-35	1/2	.191	1/4	#1025 STL	
82732-36	.503/.499	.374/.376	1/2	#4130 STL	
82732-37	.503/.499	.374/.376	3/8	#4130 STL	
82732-38	.503/.499	.374/.376	1 1/4	#4130 STL	
82732-39	.503/.499	.374/.376	1/4	#4130 STL	
82732-40	3/8×.058		3/4	#1025 STL	WAS 8171
82732-41	3/4	.664	.125	#1025 STL	
82732-42	5/8×.083		1/2	#1025 STL	
82732-43	3/8×.083		3/8	#1025 STL	
82732-44	1/2×.058		1 1/8	#1025 STL	REMOVE BURRS
82732-45	3/4×.065		2 1/4	#4130 STL	
82732-46	1/4×.028		7/16	#1025 STL	
82732-47	5/16	7/32	1/4	COPPER TUBE	
82732-48	3/8×.083		13/16	#1025 STL.	
82732-49	3/8×.083		7/8	#1025 STL	
82732-50	3/8×.083		1/2	#1025 STL	
82732-51	7/16	1/4	7/32	2S-O ALUM	
82732-52	5/16×.032		1/4	2S-O ALUM	
82732-53	5/16×.065		5/8	#1025 STL.	
82732-54	1 1/2	1.397/1.400	2 1/4	#4130 STL.	
82732-55	3/16	1/8	2	#1025 STL	
82732-56	.380/.370	.249/.251	1	#1025 STL	
82732-57	3/4×.058		21/32	#1025 STL	
82732-58	3/8	.261	7/8	3S-1/2 H. ALUM	
82732-59	3/4	.500	1/2	2S-1/2 H. ALUM	
82732-60	5/16	.250	3/8	#1025 STL	
82732-61	.875	.755/.765	1	#1025 STL	
82732-62	.380/.370	.249/.251	11/32	#1025 STL	
82732-63	5/16	.188	1/8	#1025 STL	
82732-64	9/16	.421/.426	1 3/8	#1025 STL.	
82732-65	1/2	.30/.306	1/4	#1025 STL	
82732-66	1/2	.301/.306	3/8	#1025 STL	
82732-67	1/2	.191	3/4	#1025 STL	CHROMIUM PLATE & BUFF TO POLISH

PART NO.	O. D.	I. D.	L.	MAT'L.	REMARKS
82732-68	1/4	.191	3/8	#1025 STL	
82732-69	1 3/8	1.242/1.272	1/4	#4130 STL.	
82732-70	5/16	.184/.189	1.060	#1025 STL.	
82732-71	1/2	.250	1/2	#1025 STL.	
82732-72	1/4	.191	.156	#1025 STL	
82732-73	7/16	.301/.306	3/4	#1025 STL.	
82732-74	3/8	.344/.349	.687	#1025 STL.	
82732-75	1/4	.124/.129	3/16	#1025 STL	

NOTE:
SEE ALSO DWG'S 80012, 80022 & 86102

LET.	REVISION	DATE	BY
AJ	-75 ADDED	3-9-51	I.M.M.
AH	-74 ADDED	2-5-51	M.G.
AG	-72 & -73 ADDED	1-11-51	C.K.
AF	-70 & -71 ADDED	11-10-50	M.G.
AE	REDRAWN & REVISED	10-24-50	F.C.S.

THIS DRAWING IS THE PROPERTY OF THE PIPER AIRCRAFT CORP. AND ITS POSSESSION BY UNAUTHORIZED PERSONS SHALL NOT BE CONSTRUED AS PERMISSION TO REPRODUCE FOR SALE, IN WHOLE OR IN PART, ANY DEVICES SHOWN THEREON

MODEL	PER PLANE	NEXT ASSEMBLY	SUPERSEDES	SUP. BY

PIPER AIRCRAFT CORP.
LOCK HAVEN, PENNA.

NOTED

PART No. | NO. REQ. | MATERIAL

SCALE | TOTAL WT.—LBS.

FINISH—PIPER SPECIFICATION #10

MANUFACTURING PRACTICES—PIPER SPECIFICATION #9

BUSHINGS (SHEET 3)

DRAFTSMAN	CHECKER	STANDARDS
F. C. S. 10-24-50	H. R. K. 11-7-50	

82732

A823

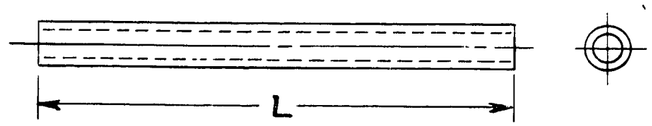

PART NO.	L	MODEL	PER PLANE	NEXT ASSEMBLY	REMARKS
83161 - 2	4	J5C J5D	8	13142-1247-23334-54605-19185	
		J3		10554 15556	
83161 - 3	2				
83161 - 4	9				
83161 - 5	18	J5C	1	23334	
83161 - 6	28	J5C	1	23334	
83161 - 7	6				

PART NO.	L	MODEL	PER PLANE	NEXT ASSEMBLY	REMARKS

LET.	REVISION	DATE	BY	MODEL	PER PLANE	NEXT ASSEMBLY	SUPERSEDES	SUP. BY
N	-7 ADDED	8-15-47	R.M.	NOTED	NOTED	NOTED		
M	J3 N.A. 10554 WAS 24176 FOR-2	4-8-96	L.R.					
L	J5C MODEL REF. CAN. FOR-6	12-3-45	E.L.N					
K	REDRAWN AND REVISED	11-2-45	CRD					

THIS DRAWING IS THE PROPERTY OF THE PIPER AIRCRAFT CORP. AND ITS POSSESSION BY UNAUTHORIZED PERSONS SHALL NOT BE CONSTRUED AS PERMISSION TO REPRODUCE FOR SALE, IN WHOLE OR IN PART, ANY DEVICES SHOWN THEREON

PIPER AIRCRAFT CORP.
LOCK HAVEN, PENNA.

PART No.	No. REQ.	3/16 I.D. SIZE	W/S WIPER TUBING DESCRIPTION
			MATERIAL
SCALE FULL SIZE			TOTAL WT.–LBS.
FINISH–PIPER SPECIFICATION #10			
MANUFACTURING PRACTICES–PIPER SPECIFICATION #9			

HOSE

DRAFTSMAN	CHECKER	STANDARDS	
CRD 11-2-45	C.R.D 11.5.45		83161

684

A684

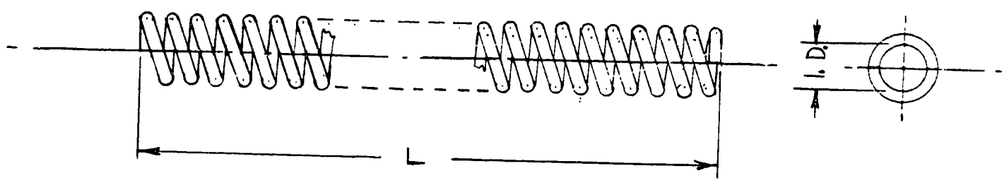

TYPE 1

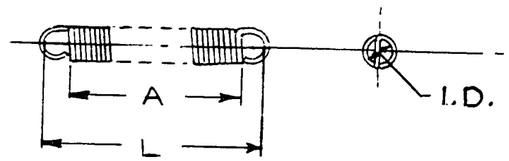

TYPE 2

PART NO.	TYPE	L	A	I.D.	WIRE DIA.	MATERIAL	NO. OF COILS	MODEL	PER PLANE	NEXT ASSEMBLY
83302-2	1	3	–	5/16	.032	SPRING STEEL	16			
83302-3	1	3	–	.410	.045	MUSIC WIRE	22			
83302-4	1	1/2	–	.156	.020	MUSIC WIRE	7	J5C	1	75266
83302-5	2	11/16	1/2	3/16	.032	BLACK JAPANNED SPRING STEEL	–	J5C	2	24186
83302-6	2	1 1/16	3/4	5/16	.029	BLACK JAPANNED MUSIC WIRE	–	J5C	1	10283
83302-7	1	1 5/8	–	5/16	.040	SPRING STEEL	12			
83302-8	1	3	–	1	.040	SPRING STEEL	12			
83302-9	1	2	–	5/16	.029	MUSIC WIRE	16			
83302-10	1	1 5/8	–	7/16	.029	MUSIC WIRE	12 1/2			
83302-11	1	2	–	7/16	.035	SPRING STEEL	15			
83302-12	1	1 1/16		1/4	.040	SPRING STEEL	12 1/2			
83302-13	2	2 1/2	–	3/16	.032	SPRING STEEL	35			
83302-14	1	2 5/8	–	11/32	.050	SPRING STEEL	13			
83302-15	1	1 1/16	–	7/16	.029	MUSIC WIRE	8			
83302-16	1	3/4	–	1/8	.032	MUSIC WIRE	12			

LET.	REVISION	DATE	BY
P	-16 ADDED	9-25-50	FCS
O	-15 ADDED	1-30-50	K.D.
N	-14 ADDED	9-20-49	R.R.
M	-13 ADDED	2-25-49	C.E.K.
L	-12 ADDED	6-28-48	R.M.
K	-10, -11 ADDED	3-3-48	R.M.
J	-9 ADDED	7-15-47	R.M.
H	-8 ADDED	6-16-47	R.D.R.
G	-7 ADDED	5-29-47	R.F.
F	J5C MODEL REF CAN. FOR -6	7-16-46	E.L.N.
E	-6 ADDED	4-1-46	L.R.
D	REDRAWN & REVISED	3-25-46	C.E.K.

THIS DRAWING IS THE PROPERTY OF THE PIPER AIRCRAFT CORP. AND ITS POSSESSION BY UNAUTHORIZED PERSONS SHALL NOT BE CONSTRUED AS PERMISSION TO REPRODUCE FOR SALE, IN WHOLE OR IN PART. ANY DEVICES SHOWN THEREON

MODEL	PER PLANE	NEXT ASSEMBLY	SUPERSEDES	SUP. BY
NOTED	NOTED	NOTED		

PIPER AIRCRAFT CORP.
LOCK HAVEN, PENNA.

NOTED

PART No. | NO. REQ. | MATERIAL

SCALE FULL SIZE | TOTAL WT.–LBS.

FINISH–PIPER SPECIFICATION #10

MANUFACTURING PRACTICES–PIPER SPECIFICATION #9

COIL SPRINGS

DRAFTSMAN	CHECKER	STANDARDS
C.E.K. 3-25-46	E.E.T. 3-26-46	

83302

A685

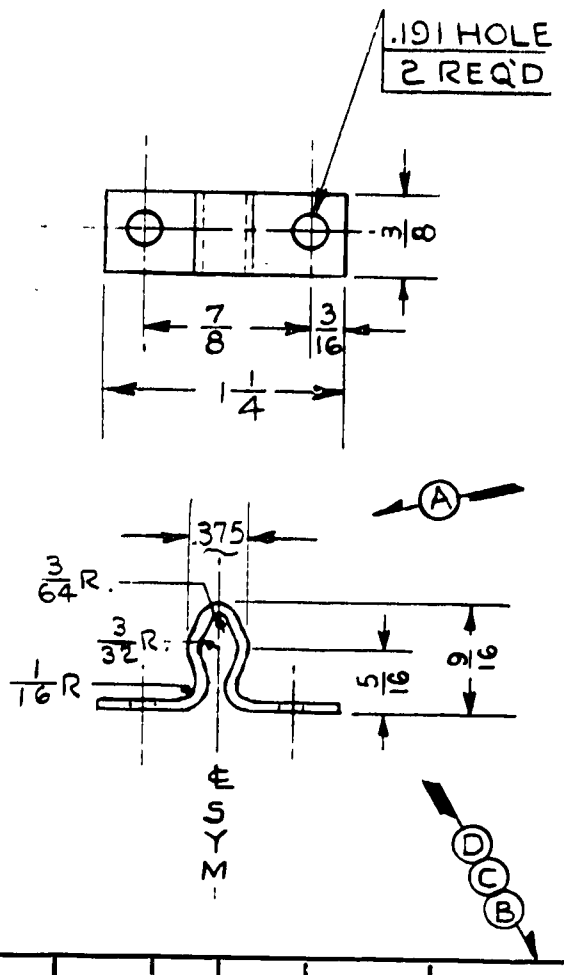

								.040 x 3/8 x 2 7/16	MILD STEEL
								SIZE	DESCRIPTION
							PART NO.	NO. REQ.	MATERIAL
							SCALE FULL SIZE		TOTAL WT.—LBS.
							FINISH—PIPER SPECIFICATION # 10		
							MANUFACTURING PRACTICES—PIPER SPECIFICATION # 9		
				J3D	1	52453			
				NE-1	1	52453			
				J5C	1	10209			
				J5	1	52453			
				MODEL	PER PLANE	NEXT ASSEMBLY	SUPERSEDES	SUP. BY	
E	REDRAWN WITHOUT CHANGE	6-21-51	I.M.M	THIS DRAWING IS THE PROPERTY OF THE PIPER AIRCRAFT CORP. AND ITS POSSESSION BY UNAUTHORIZED PERSONS SHALL NOT BE CONSTRUED AS PERMISSION TO REPRODUCE FOR SALE IN WHOLE OR IN PART ANY DEVICES SHOWN THEREON.					
D	J5C N.A. 10209 WAS 10233	11-2-45	I.D.B						
C	J5C N.A. 10233 WAS 54762	10-23-45	I.D.B						
B	J5C N.A. 54762 WAS 52453	1-21-44	H.R.K						
A	.375 WAS 3/8	12-13-43	R.E.T.						
LET	REVISION	DATE	BY						

PIPER AIRCRAFT CORP.
LOCK HAVEN, PENNA.

STUD—CATCH

DRAFTSMAN	CHECKER	STANDARDS	
L.E.K. 8-17-42	McRAE 10-10-42		83481

374

A374

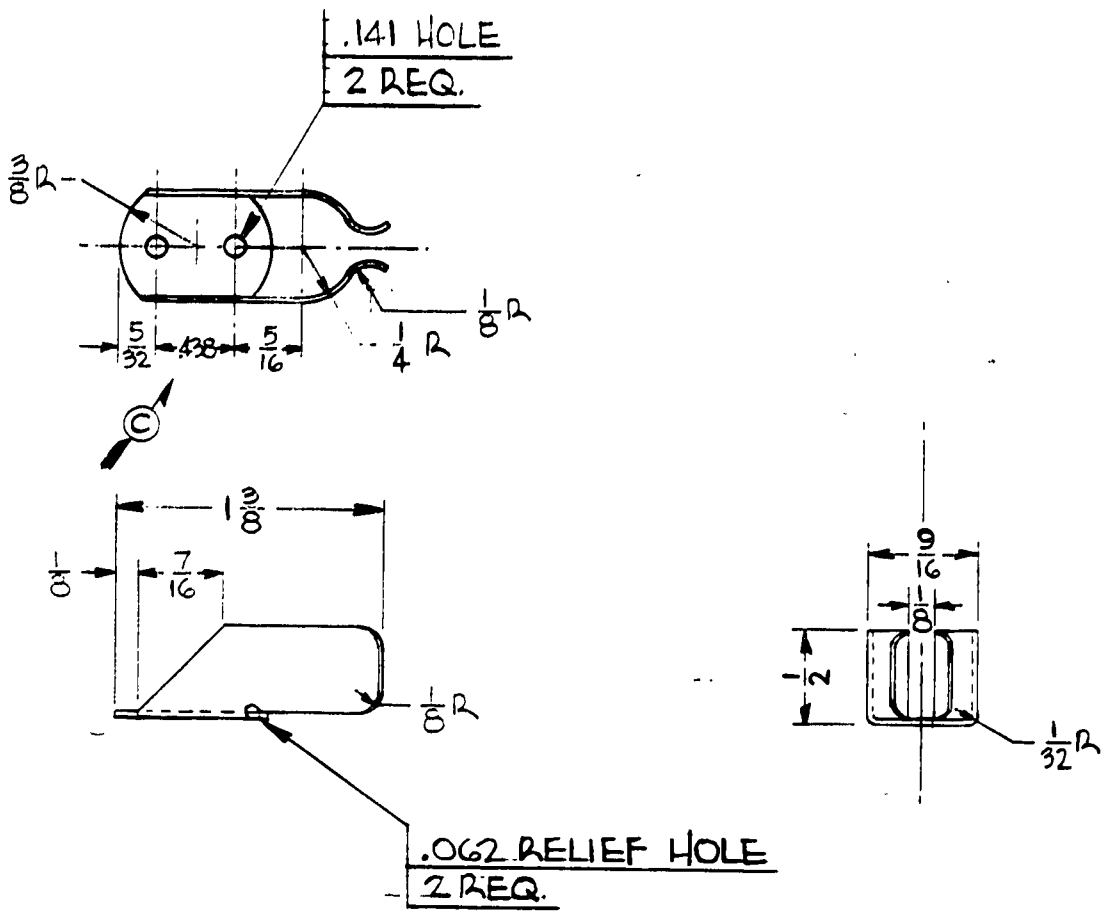

										.022×1½×1 9/16	SPRING STEEL
										SIZE	DESCRIPTION
									PART NO.	NO. REQ.	MATERIAL
									SCALE FULL SIZE		TOTAL WT.—LBS.
									FINISH—PIPER SPECIFICATION # 10		
									MANUFACTURING PRACTICES—PIPER SPECIFICATION # 9		
				HE-1	1	83931			SPRING-CATCH		
				15C-150	1	B3931					
				MODEL	PER PLANE	NEXT ASSEMBLY	SUPERSEDES	SUP. BY			
D	REDRAWN WITHOUT CHANGE	6-15-51	M.G.	THIS DRAWING IS THE PROPERTY OF THE PIPER AIRCRAFT CORP. AND ITS POSSESSION BY UNAUTHORIZED PERSONS SHALL NOT BE CONSTRUED AS PERMISSION TO REPRODUCE FOR SALE IN WHOLE OR IN PART ANY DEVICES SHOWN THEREON.							
C	.438 WAS 7/16	12-13-43	R.E.T.								
B	MODEL J5 REF. REMOVED	2-6-43	R.R.F.	PIPER AIRCRAFT CORP. LOCK HAVEN, PENNA.					L.E.K. 8-17-42 DRAFTSMAN	McRAE 10-10-42 CHECKER	STANDARDS
A	83931 WAS 83471	2-4-43	R.R.F.								83491
LET	REVISION	DATE	BY								

375

A375

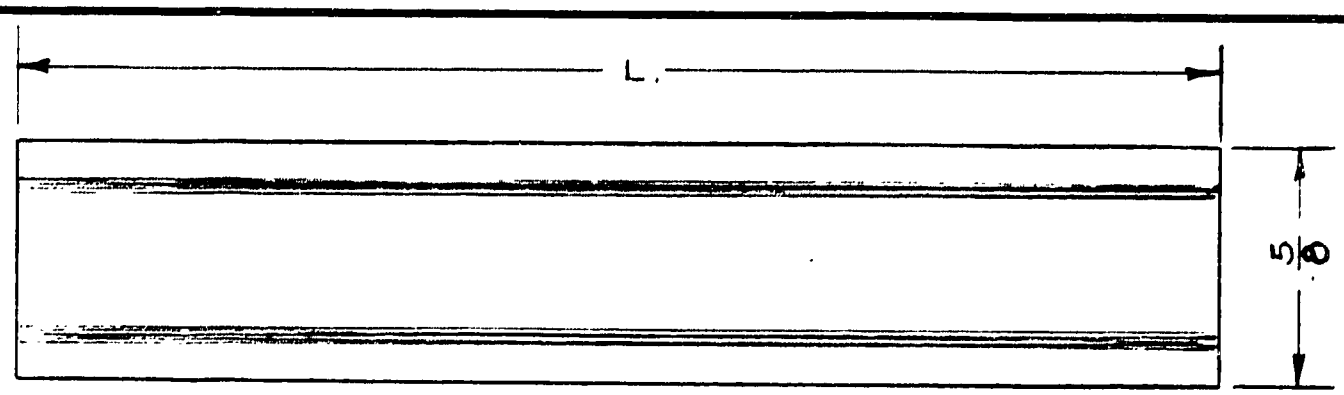

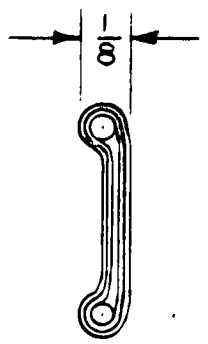

PART NO.	L	MODEL	PER SHIP	NEXT ASSEMBLY
-2	52	J3	1	24178
		L-4A	1	24256
		L-4B	1	23326
-3	12	L-14	2	90600
-4	19 5/8	L-14	2	90600
-5	34	L-14	1	90600
-6	6			
-7	43 1/2			

NOTE:
CHEVY WEB PURCH. ARBEKA WEBBING CO.

PART NO.	NO. REQ.	SIZE	DESCRIPTION
		NOTED	NOTED
		1/8 x 5/8 x NOTED	SEE NOTE

MATERIAL

SCALE TWICE SIZE | TOTAL WT.—LBS.

FINISH—PIPER SPECIFICATION # 10

MANUFACTURING PRACTICES—PIPER SPECIFICATION # 9

LET	REVISION	DATE	BY	MODEL	PER PLANE	NEXT ASSEMBLY	SUPERSEDES	SUP. BY
G	REDRAWN WITHOUT CHANGE	6-21-51	L.M.M	NOTED	NOTED	NOTED		
F	-7 ADDED	9-3-47	R.J.C.					
E	FOR-5, 34 WAS 36; -6 ADDED	8-7-47	R.J.C.					
D	L-14 MODEL REF. ADDED FOR-3-4-5	6-14-45	I.D.B					
C	-3, -4, -5 ADDED	12-29-44	J.B.W.					
B	L-4A NEXT ASS'Y. 24256 WAS 23876 FOR-2	6-26-44	R.D.R.					
A	J3 NEXT ASS'Y. 24176 WAS 23544	11-22-43	A.H.					

THIS DRAWING IS THE PROPERTY OF THE PIPER AIRCRAFT CORP. AND ITS POSSESSION BY UNAUTHORIZED PERSONS SHALL NOT BE CONSTRUED AS PERMISSION TO REPRODUCE FOR SALE IN WHOLE OR IN PART ANY DEVICES SHOWN THEREON.

PIPER AIRCRAFT CORP.
LOCK HAVEN, PENNA.

WEBBING

DRAFTSMAN	CHECKER	STANDARDS
CROWLEY 4-14-43	R.C.M. 4-15-43	

83891

376

A376

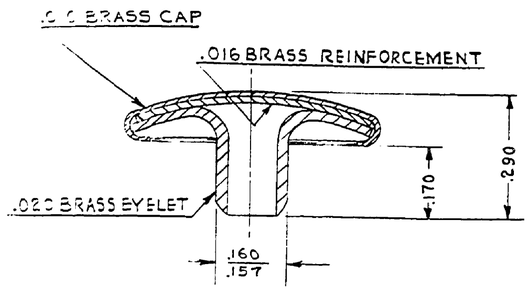

SECTION **A-A**

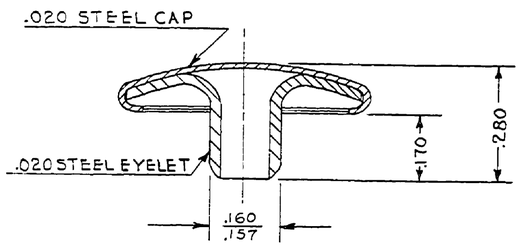

SECTION **A-A**

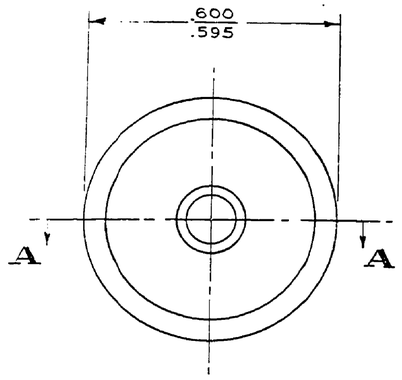

24 / BUTTON

PART NO.		MATERIAL
PIPER AIRCRAFT	UNITED-CARR	
83913-2	B670	BRASS
83913-3	4670	STEEL

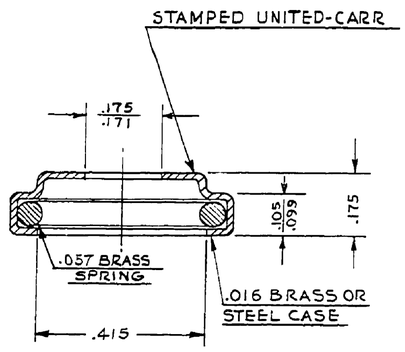

SECTION **B-B**

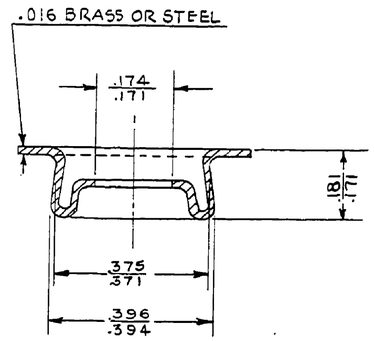

SECTION **C-C**

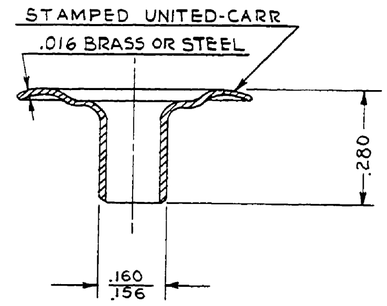

SECTION **D-D**

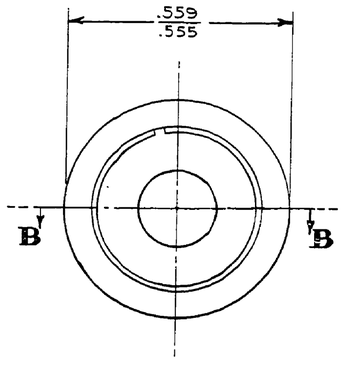

SOCKET

PART NO.		MATERIAL
PIPER AIRCRAFT	UNITED-CARR	
83913-4	C548	BRASS
83913-5	5-C548	STEEL & BRASS

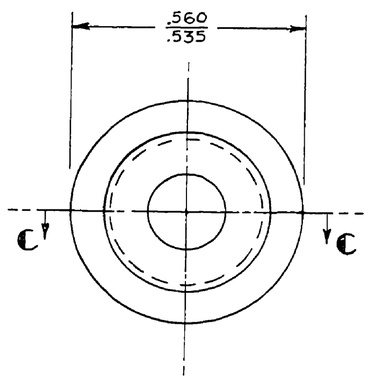

STUD

PART NO.		MATERIAL
PIPER AIRCRAFT	UNITED-CARR	
83913-6	550	BRASS
83913-7	4-550	STEEL

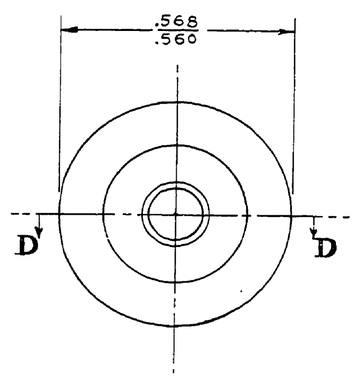

EYELET

PART NO.		MATERIAL
PIPER AIRCRAFT	UNITED-CARR	
83913-8	550A	BRASS
83913-9	4-550A	STEEL

TOLERANCES ±.010 UNLESS OTHERWISE SPECIFIED

THIS DRAWING IS THE PROPERTY OF THE PIPER AIRCRAFT CORP. AND ITS POSSESSION BY UNAUTHORIZED PERSONS SHALL NOT BE CONSTRUED AS PERMISSION TO REPRODUCE FOR SALE, IN WHOLE OR IN PART, ANY DEVICES SHOWN THEREON

LET.	REVISION	DATE	BY
A	REDRAWN WITHOUT CHANGE	6-22-51	I.N.M

ALL MODEL	PER PLANE	NEXT ASSEMBLY	SUPERSEDES	SUP. BY

PIPER AIRCRAFT CORP.
LOCK HAVEN, PENNA.

NO. REQ.	NOTED SIZE	NOTED DESCRIPTION
PART NO.		MATERIAL
SCALE 4 X SIZE		TOTAL WT.–LBS.

FINISH–PIPER SPECIFICATION #10
MANUFACTURING PRACTICES–PIPER SPECIFICATION #9

FASTENER DETIALS - DURABLE DOT

R.E.T.	C.E.V.		
1-28-43	2-3-43		83913
DRAFTSMAN	CHECKER	STANDARDS	

824

A824

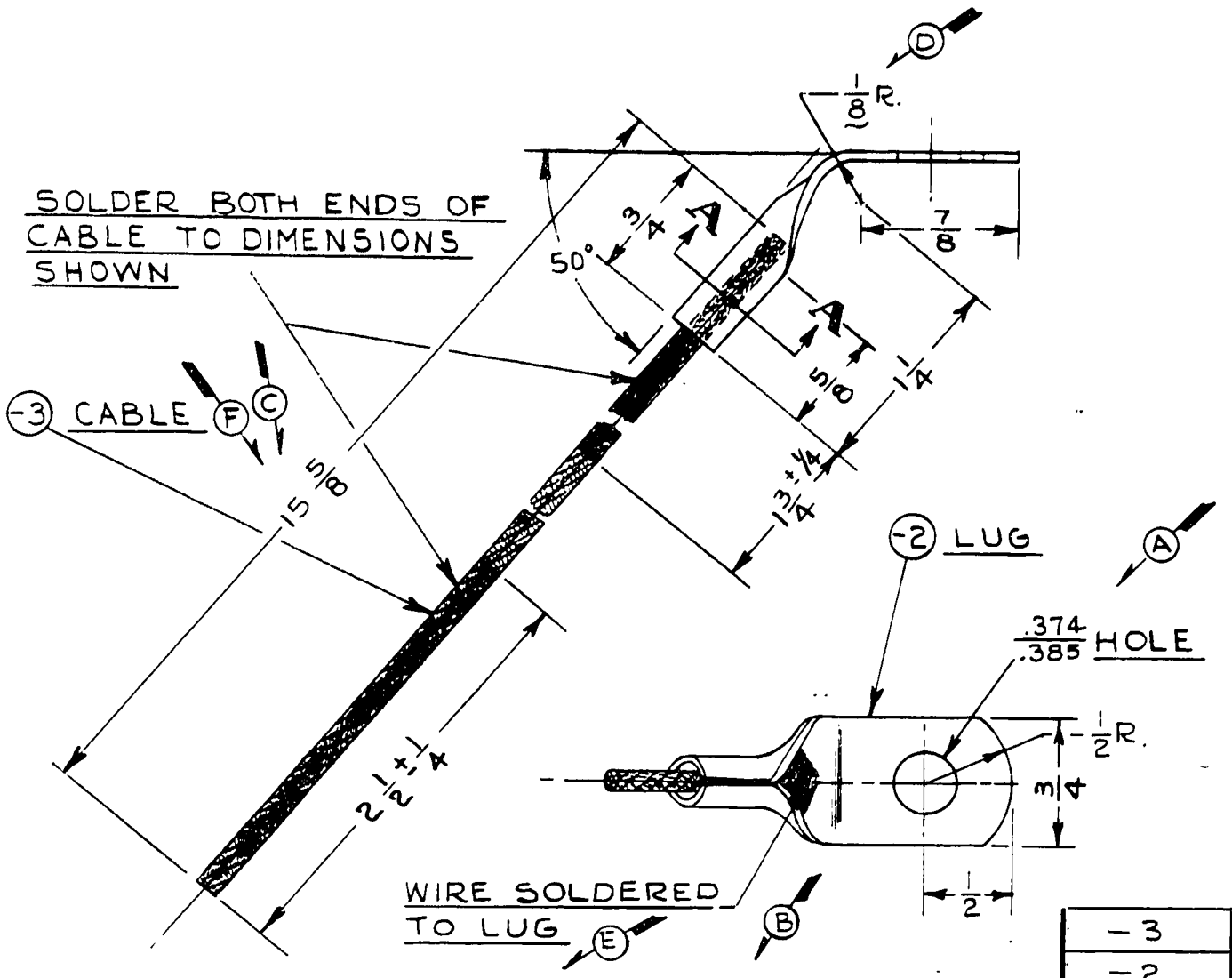

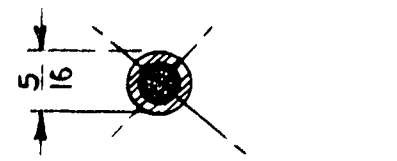

SECTION A-A

PART NO.	NO. REQ.	SIZE	DESCRIPTION / MATERIAL
-3	1	15 5/8 LONG	7x19 GAL. AIRCRAFT CORD 1/8 DIA.
-2	1	.062 x 3/4 x 2 5/16	#1025 STEEL

SCALE FULL SIZE | TOTAL WT.—LBS.

FINISH—PIPER SPECIFICATION # 10

MANUFACTURING PRACTICES—PIPER SPECIFICATION # 9

LET	REVISION	DATE	BY
G	REDRAWN WITHOUT CHANGE	6-20-51	I.M.M.
F	15 5/8 WAS 14 5/8	4-23-45	E.L.N.
E	L-14 MODEL REF. ADDED	4-23-45	E.L.N.
D	1/8 R. WAS 1/4 R. 2 5/16 WAS 2 7/16 FOR -2	8-30-44	E.L.N.
C	14 5/8 ADDED	8-9-44	I.D.B.
B	L-4A N.A. 31413 WAS 84002	8-9-44	I.D.B.
A	.374/.385 WAS .375 +.002 -.001	8-9-44	I.D.B.

MODEL	PER PLANE	NEXT ASSEMBLY	SUPERSEDES	SUP. BY
L-14	1	90600		
L-4A	1	31413		

THIS DRAWING IS THE PROPERTY OF THE PIPER AIRCRAFT CORP. AND ITS POSSESSION BY UNAUTHORIZED PERSONS SHALL NOT BE CONSTRUED AS PERMISSION TO REPRODUCE FOR SALE IN WHOLE OR IN PART ANY DEVICES SHOWN THEREON.

PIPER AIRCRAFT CORP.
LOCK HAVEN, PENNA.

WIRE ASSEMBLY—STATIC GROUND

DRAFTSMAN	CHECKER	STANDARDS
R. FRANK 2-5-43	C.E.V. 2-8-43	

83991

377

A377

BLACK ENAMELED INDEX PLATE
WITH WHITE LETTERS

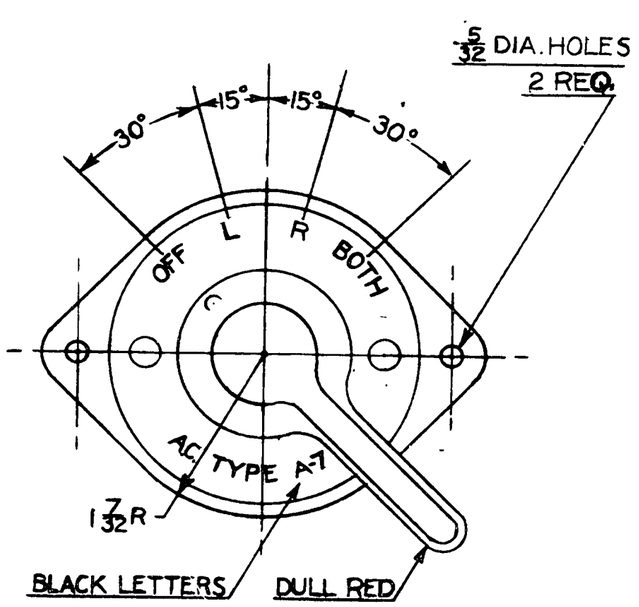

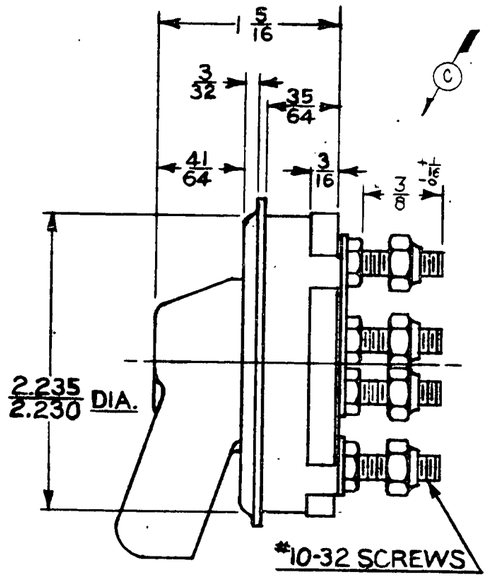

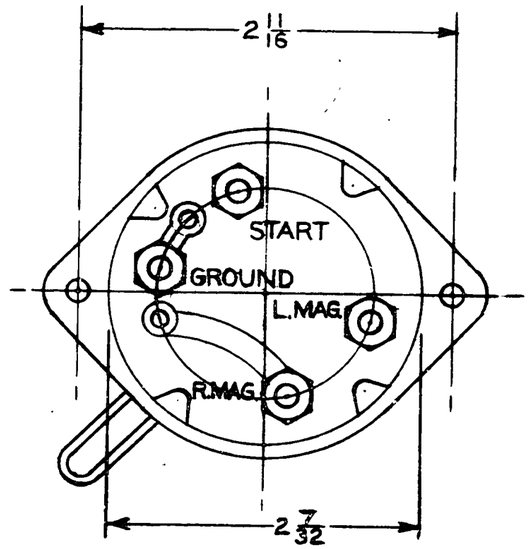

MAGNETO IGNITION SWITCH NO. 50248
PURCH. BRIGGS & STRATTON CORP.
MILWAUKEE, WISC.

SWITCH FUNCTIONS

OFF - THREE MAGNETOS GROUNDED

L - RIGHT MAGNETO IS GROUNDED - LEFT MAGNETO IS NOT GROUNDED - START IS NOT GROUNDED

R - LEFT MAGNETO IS GROUNDED - RIGHT MAGNETO IS NOT GROUNDED - START IS NOT GROUNDED

BOTH - NONE GROUNDED

THIS DRAWING TRACED FROM MFG. DRAWING.

REVISION	DATE	BY
E J5C MODEL REF. CANCELLED	11-9-45	C.E.K.
D L-14 MODEL REF. ADDED	7-3-45	J.M.M.
C 3/4 DIM. REMOVED. 3/8 & 7/16 DIM. ADDED	6-2-45	H.M.Z.
B J5C MODEL REF. ADDED	12-14-43	F.J.D.
A L-4A REF. ADDED	7-13-43	C.K.

MODEL	PER SHIP	NEXT ASSEMBLY	SUPERSEDES	SUP. BY
J5	1	83952		
L-14	1	90600		
J5C	1	83952		
L-4A	1	83952		
L-4B	1	83952		
R5-1	1	83952		

PIPER AIRCRAFT CORP.
LOCK HAVEN, PA.

PART NO.	NO. REQ.	MATERIAL
SCALE - FULL SIZE		TOTAL WT.-LBS.

SWITCH ASSEMBLY-
IGNITION

DRAWN	CHECKED	APPROVED
C.K. 5-10-43	C.E.K. 5-10-43	

84188

A686

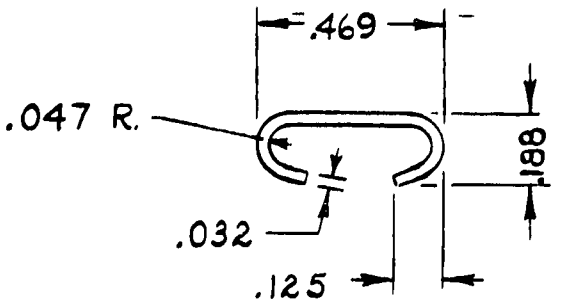

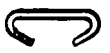

ACTUAL SIZE

MATERIAL #1010 - #1020 STEEL
WT. PER LINEAL FT. - .092 LBS.

CHANNEL WITH SPECIFIED CROSS SECTION
MAY BE PURCHASED FROM :
DAHLSTROM - SECTION #1412-A
OR
VAN HUFFEL TUBE CO. - SECTION #629

BLANK WIDTH 13/16

PART No.	No. REQ.	MATERIAL
SCALE TWICE SIZE		TOTAL WT.—LBS.

FINISH—PIPER SPECIFICATION #10
MANUFACTURING PRACTICES—PIPER SPECIFICATION #9

THIS DRAWING IS THE PROPERTY OF THE PIPER AIRCRAFT CORP. AND ITS POSSESSION BY UNAUTHORIZED PERSONS SHALL NOT BE CONSTRUED AS PERMISSION TO REPRODUCE FOR SALE, IN WHOLE OR IN PART, ANY DEVICES SHOWN THEREON.

MODEL	PER PLANE	NEXT ASSEMBLY	SUPERSEDES	SUP. BY

LET.	REVISION	DATE	BY
B	REDRAWN & REVISED	3-20-46	C.L.W.

PIPER AIRCRAFT CORP.
LOCK HAVEN, PENNA.

SECTION - CHANNEL

DRAFTSMAN	CHECKER	STANDARDS	
C.L.W. 3-20-46	R.E.T. 3-22-46		84471

PENCILTEX A. & B. SMITH CO., PGH., PA.

378

A378

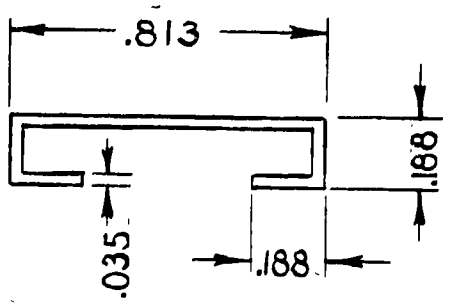

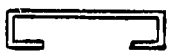

ACTUAL SIZE

MATERIAL #1010-#1020 STEEL
WT. PER LINEAL FT. -.164 LBS.

CHANNEL WITH SPECIFIED CROSS SECTION
MAY BE PURCHASED FROM:
DAHLSTROM - SECTION #1566
OR
VAN HUFFEL TUBE CO. - SECTION #630

			BLANK WIDTH 1 7/16
PART No.	No. REQ.	MATERIAL	
SCALE TWICE SIZE		TOTAL WT.—LBS.	
FINISH—PIPER SPECIFICATION #10			
MANUFACTURING PRACTICES—PIPER SPECIFICATION #9			

SECTION - CHANNEL

THIS DRAWING IS THE PROPERTY OF THE PIPER AIRCRAFT CORP. AND ITS POSSESSION BY UNAUTHORIZED PERSONS SHALL NOT BE CONSTRUED AS PERMISSION TO REPRODUCE FOR SALE, IN WHOLE OR IN PART, ANY DEVICES SHOWN THEREON.

MODEL	PER PLANE	NEXT ASSEMBLY	SUPERSEDES	SUP. BY

LET.	REVISION	DATE	BY
B	REDRAWN & REVISED	3-21-46	C.L.W.

PIPER AIRCRAFT CORP.
LOCK HAVEN, PENNA.

DRAFTSMAN	CHECKER	STANDARDS	
C. L. W. 3-21-46	R.E.T. 3-22-46		84491

PENCILTEX A. & B. SMITH CO., PGH., PA.

379



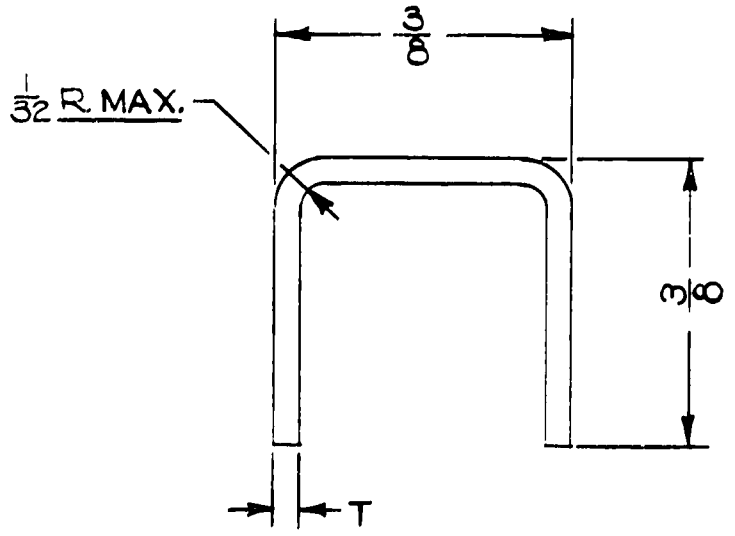

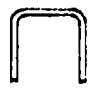

ACTUAL SIZE

SECTION NO	T	MATERIAL	WT. PER LINEAL FT.
-2	.020	#1010-#1020 STEEL	.064 LBS.
-3	.032	61S-T ALUM.	.035 LBS.

.020 STEEL CHANNEL WITH SPECIFIED CROSS SECTION MAY BE PURCHASED FROM DAHLSTROM.-SECTION #1556.

LET	REVISION	DATE	BY
A	REDRAWN WITHOUT CHANGE	6-19-51	I.E.M.

MODEL	PER PLANE	NEXT ASSEMBLY	SUPERSEDES	SUP. BY

THIS DRAWING IS THE PROPERTY OF THE PIPER AIRCRAFT CORP. AND ITS POSSESSION BY UNAUTHORIZED PERSONS SHALL NOT BE CONSTRUED AS PERMISSION TO REPRODUCE FOR SALE IN WHOLE OR IN PART ANY DEVICES SHOWN THEREON.

PIPER AIRCRAFT CORP.
LOCK HAVEN, PENNA.

BLANK WIDTH 1 INCH

PART NO. | NO. REQ. | MATERIAL

SCALE 4X SIZE | TOTAL WT.—LBS.

FINISH—PIPER SPECIFICATION # 10

MANUFACTURING PRACTICES—PIPER SPECIFICATION # 9

SECTION-CHANNEL

DRAFTSMAN	CHECKER	STANDARDS
M.G.S. 3-16-43	L.E.K. 5-14-43	

84501

380

A380

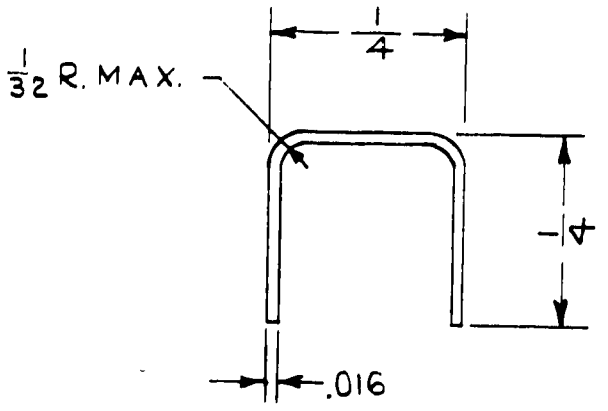



ACTUAL SIZE

MATERIAL: #1010-#1020 STEEL
WT. PER LINEAL FT.-.039 LBS.

CHANNEL WITH SPECIFIED CROSS SECTION
MAY BE PURCHASED FROM
DAHLSTROM. — SECTION #2065

This page intentionally left blank.

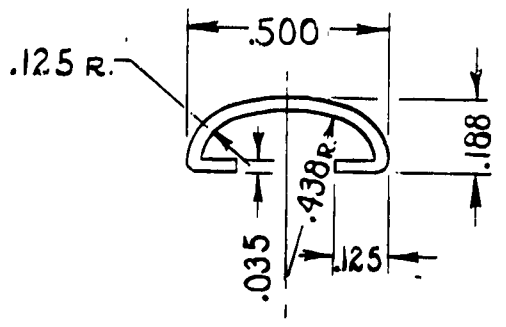



ACTUAL SIZE

MATERIAL #1010 - #1020 STEEL
WT. PER LINEAL FT. - .102 LBS.

CHANNEL WITH SPECIFIED CROSS SECTION
MAY BE PURCHASED FROM :
DAHLSTROM - SECTION #1633

BLANK WIDTH 7/8

PART No.	No. REQ.	MATERIAL
SCALE TWICE SIZE		TOTAL WT.—LBS.

FINISH—PIPER SPECIFICATION #10
MANUFACTURING PRACTICES—PIPER SPECIFICATION #9

SECTION - CHANNEL

THIS DRAWING IS THE PROPERTY OF THE PIPER AIRCRAFT CORP. AND ITS POSSESSION BY UNAUTHORIZED PERSONS SHALL NOT BE CONSTRUED AS PERMISSION TO REPRODUCE FOR SALE, IN WHOLE OR IN PART, ANY DEVICES SHOWN THEREON.

MODEL	PER PLANE	NEXT ASSEMBLY	SUPERSEDES	SUP. BY

LET.	REVISION	DATE	BY
A	REDRAWN & REVISED	3-21-46	C.L.W.

PIPER AIRCRAFT CORP.
LOCK HAVEN, PENNA.

DRAFTSMAN	CHECKER	STANDARDS
C. L. W. 3-21-46	R.E.T. 3-22-46	

84521

PENCILTEX A. & B. SMITH CO., PGH., PA.

382

A382

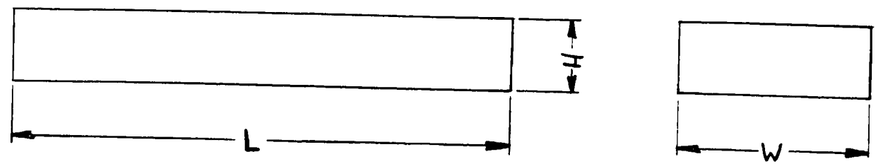

PART NO.	L	W	H	REMARKS
84682-2	2 7/8	3/8	5/16	
84682-3	1	5/16	5/16	
84682-4	1	7/32	7/32	
84682-5	32	1	7/16	
84682-6	7 3/8	1	11/16	WAS 51383-3
84682-7	4 1/2	1	11/16	WAS 51383-4
84682-8	4	1 3/4	1	
84682-9	6	1 3/4	1	
84682-10	4 1/4	15/16	5/8	
84682-11	17	5/16	7/8	
84682-12	1	3/8	3/8	
84682-13	6	1	1	
84682-14	4	1	1	

PART NO.	L	W	H	REMARKS

PART NO.	L	W	H	REMARKS

LET	REVISION	DATE	BY
L	REDRAWN & REVISED	6-22-51	MG.

MODEL	PER PLANE	NEXT ASSEMBLY	SUPERSEDES	SUP. BY

THIS DRAWING IS THE PROPERTY OF THE PIPER AIRCRAFT CORP. AND ITS POSSESSION BY UNAUTHORIZED PERSONS SHALL NOT BE CONSTRUED AS PERMISSION TO REPRODUCE FOR SALE IN WHOLE OR IN PART ANY DEVICES SHOWN THEREON.

PIPER AIRCRAFT CORP.
LOCK HAVEN, PENNA.

PART NO.	NO. REQ.	NOTED SIZE	WOOD DESCRIPTION MATERIAL
SCALE			TOTAL WT.—LBS.

FINISH—PIPER SPECIFICATION # 10

MANUFACTURING PRACTICES—PIPER SPECIFICATION # 9

BLOCKS – WOOD

DRAFTSMAN	CHECKER	STANDARDS	
M.W.G. 6-22-51	I.E.M. 6-28-51		84682

687

A687

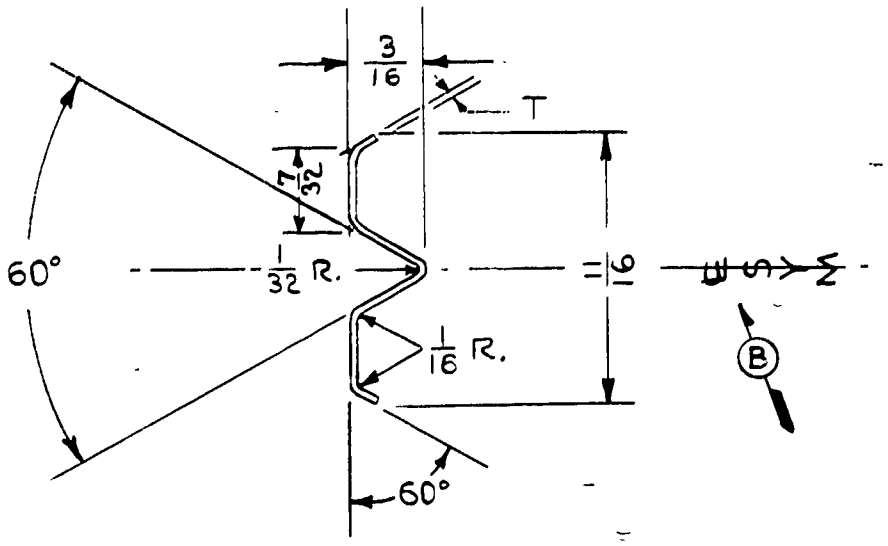



ACTUAL SIZE

SECTION NO.	T	MATERIAL	WT. PER LINEAL FT.
84761	.020	NICRAL OR	.016
84761-2	.014	61S-T ALUM.	.015

LET	REVISION	DATE	BY
C	REDRAWN WITHOUT CHANGE	6-15-51	I.M.M.
B	& SYM. ADDED	7-27-43	C.E.K.
A	-2 ADDED	6-3-43	R.R.F.

MODEL	PER PLANE	NEXT ASSEMBLY	SUPERSEDES	SUP. BY

THIS DRAWING IS THE PROPERTY OF THE PIPER AIRCRAFT CORP. AND ITS POSSESSION BY UNAUTHORIZED PERSONS SHALL NOT BE CONSTRUED AS PERMISSION TO REPRODUCE FOR SALE IN WHOLE OR IN PART ANY DEVICES SHOWN THEREON.

PIPER AIRCRAFT CORP.
LOCK HAVEN, PENNA.

BLANK WIDTH 7/8

PART NO. | NO. REQ. | MATERIAL

SCALE TWICE SIZE | TOTAL WT.—LBS.

FINISH—PIPER SPECIFICATION # 10

MANUFACTURING PRACTICES—PIPER SPECIFICATION # 9

SECTION— RIB BRACE

DRAFTSMAN	CHECKER	STANDARDS
I.D.B. 5-1-43	L.E.K. 5-14-41	

84761

383

A383

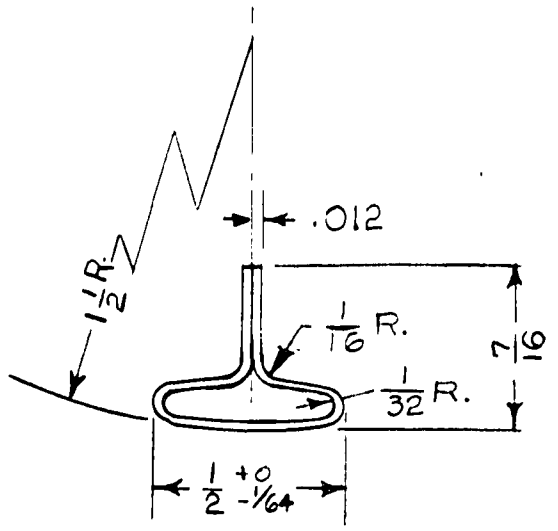

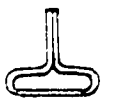

ACTUAL SIZE

MATERIAL : NICRAL OR 61 S-T ALUM.
WT. PER. LINEAL FT.: — .025 LBS.

LIMITS. SHOP PRACTICES AND FINISH. UNLESS OTHERWISE NOTED. TO BE IN ACCORDANCE WITH PIPER SPECIFICATIONS #9 AND #10.

LET.	REVISION	DATE	SR.	BY

MODEL	PER SHIP	NEXT ASSEMBLY	SUPERSEDES	SUPERSEDED BY

PIPER AIRCRAFT CORP.
LOCK HAVEN, PENNA.

PART No.	No. REQ.	MATERIAL
		BLANK WIDTH 1 5/8

SCALE TWICE SIZE

SECTION - RIB CAPSTRIP

I. D. B	L. E. K.		84771
5-4-43	5-14-43		
DRAWN	CHECKED	APPROVED	

NO. 195-M ALBANENE A. & B. SMITH CO., PGH., PA.

384

A384

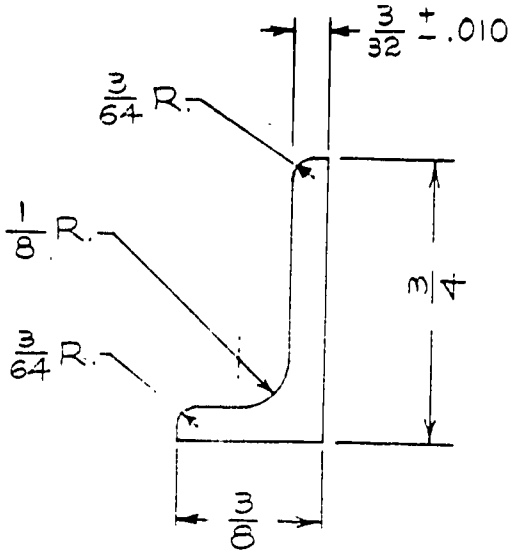



ACTUAL SIZE

MATERIAL: 61S-T DURAL
WT. PER LINEAL FT. .120

ANGLE WITH SPECIFIED CROSS SECTION MAY BE PURCHASED FROM ALUMINUN CO. OF AMERICA
DIE NO. 734-A

LIMITS, SHOP PRACTICES AND FINISH, UNLESS OTHERWISE NOTED, TO BE IN ACCORDANCE WITH PIPER SPECIFICATIONS #9 AND #10.

LET.	REVISION	DATE	SR.	BY

MODEL	PER SHIP	NEXT ASSEMBLY	SUPERSEDES	SUPERSEDED BY

PIPER AIRCRAFT CORP.
LOCK HAVEN, PENNA.

PART No.	No. REQ.	MATERIAL

SCALE : TWICE SIZE & NOTED

SECTION - ANGLE

DRAWN	CHECKED	APPROVED
Keller 8-5-43	C.K. 8-6-43	

84921

NO. 105-M ALBANENE A. & B. SMITH CO., PGH., PA.

385

A385

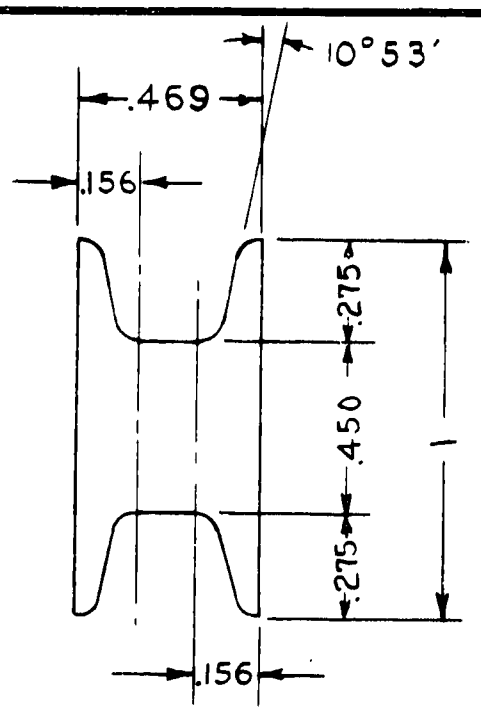

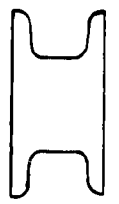

ACTUAL SIZE

MATERIAL: 61S-T ALUM. ALLOY EXT.
WT. PER LINEAL FT. .356

FILLER BLOCK WITH SPECIFIED CROSS SECTION MAY BE PURCH. FROM ALUMINUN CO. OF AMERICA.
DIE NO. D-25334

ALL RADII 1/16

TOLERANCE NOTE:
DIMENSIONS .126 TO .500 + OR - .015
DIMENSIONS .501 TO 1.000 + OR - .020

LET	REVISION	DATE	BY
A	REDRAWN WITHOUT CHANGE	6-15-51	I.N.M.

MODEL	PER PLANE	NEXT ASSEMBLY	SUPERSEDES	SUP. BY

THIS DRAWING IS THE PROPERTY OF THE PIPER AIRCRAFT CORP. AND ITS POSSESSION BY UNAUTHORIZED PERSONS SHALL NOT BE CONSTRUED AS PERMISSION TO REPRODUCE FOR SALE IN WHOLE OR IN PART ANY DEVICES SHOWN THEREON.

PIPER AIRCRAFT CORP.
LOCK HAVEN, PENNA.

PART NO.	NO. REQ.	MATERIAL

SCALE TWICE SIZE & NOTED | TOTAL WT.—LBS.
FINISH—PIPER SPECIFICATION # 10
MANUFACTURING PRACTICES—PIPER SPECIFICATION # 9

SECTION—FILLER BLOCK

DRAFTSMAN	CHECKER	STANDARDS
KELLER 8-5-43	C.K. 8-6-43	

84931

386

A386

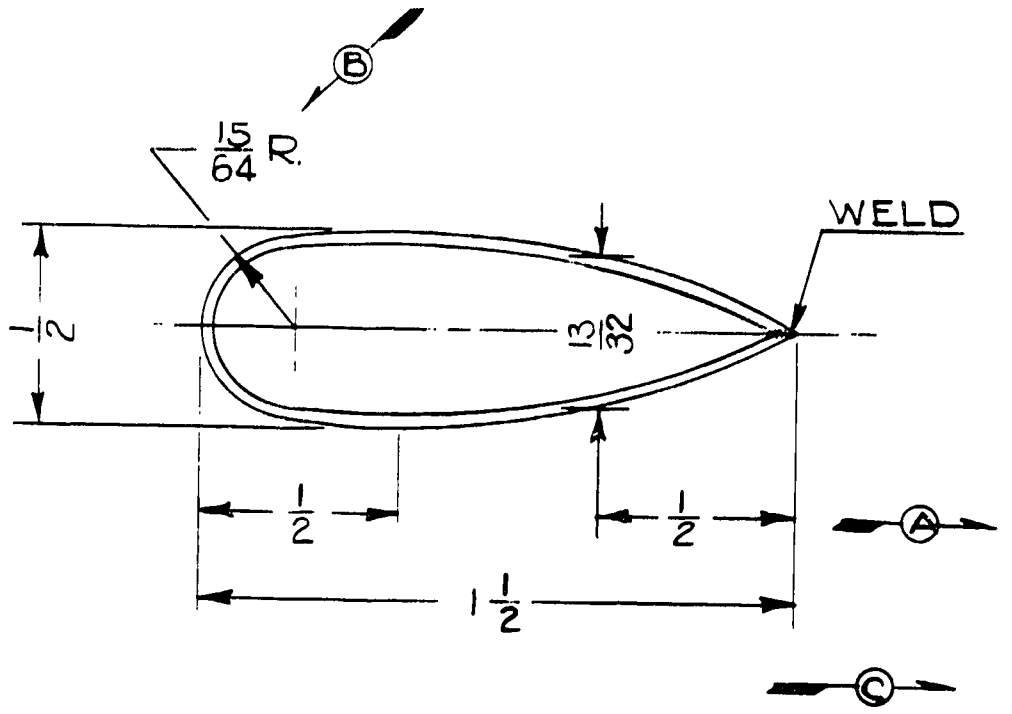

TWICE SIZE



ACTUAL SIZE

1. STREAMLINED TUBING WITH SPECIFIED CROSS SECTION MAY BE PURCHASED FROM KAWNEER MFG. CO. NILES MICH. #1667 OR VAN HUFFEL TUBE CORPORATION, WARREN, OHIO #410.
2. MIN. U.T.S. 45,000 P.S.I. S.A.E. #1010 C.R. STEEL; .035 WALL THICKNESS WEIGHT PER LINEAL FOOT = .385
3. INFORMATION TAKEN FROM KAWNEER SECTION #1667.

LET	REVISION	DATE	BY
D	REDRAWN WITHOUT CHANGE	6-15-51	I.E.M.
C	45000 WAS 50000 TO 60000	4-1-46	DAW
B	15/64 R. WAS INSIDE DIM.	1-19-44	V.C.
A	NOTE 1 REVISED	12-27-43	R.D.R.

MODEL	PER PLANE	NEXT ASSEMBLY	SUPERSEDES	SUP. BY

THIS DRAWING IS THE PROPERTY OF THE PIPER AIRCRAFT CORP. AND ITS POSSESSION BY UNAUTHORIZED PERSONS SHALL NOT BE CONSTRUED AS PERMISSION TO REPRODUCE FOR SALE IN WHOLE OR IN PART ANY DEVICES SHOWN THEREON.

PIPER AIRCRAFT CORP.
LOCK HAVEN, PENNA.

PART NO.	NO. REQ.	MATERIAL

SCALE NOTED | TOTAL WT.—LBS.

FINISH—PIPER SPECIFICATION # 10

MANUFACTURING PRACTICES—PIPER SPECIFICATION # 9

SECTION-STREAMLINED TUBE

DRAFTSMAN	CHECKER	STANDARDS
R. FRANK 8-31-43	C.K. 9-1-43	

84971

387

A387

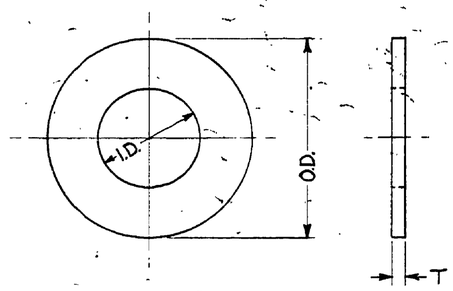

PART NO.	O. D.	I. D.	T	MATERIAL	REMARKS
85012-2	1¼	3/8	.062	#1025 STEEL	
85012-3	1¼	3/8	.125	#1025 STEEL	
85012-4	5/8	.191	.010 TO .014	HARD ALUM. OR NICRAL	
85012-5	5/8	.191	.015 TO .020	HARD ALUM. OR NICRAL	
85012-6	5/8	.191	.032	#1025 STEEL	
85012-7	1¼	3/8	.093	#1025 STEEL	
85012-8	1¼	7/16	.093	#1025 STEEL	
85012-9	3/4	3/8	1/16	HARD FIBRE	
85012-10	9/16	9/32	.045	#1025 STEEL	
85012-11	1½	7/16	.093	ZINC PLATED	PURCHASED
85012-12	5/8	.391	.032	#1025 STEEL	
85012-13	3/8	.128	.020	3S-½ H. ALUM.	
85012-14	7/8	3/32	3/32	SAE F-50 FELT	PURCHASED
85012-15	5/16	.166	.045	#1025 STEEL	
85012-16	5/8	1/4	1/8	RUBBER, SHORE HARDNESS "35 TO 60"	
85012-17	1½	3/4	.032	#1025 STEEL	
85012-18	3/4	.390	.032	#1025 STEEL	
85012-19	9/16	7/16	1/16	FIBRE	
85012-20	½	.170	5/32	#1025 STEEL	
85012-21	2	1	.032	#1025 STEEL	
85012-22	5/8	1/4	1/4	#199 GREY FELT	
85012-23	½	.113	.016	2S-½ H. ALUM.	
85012-24	5/8	.261	.045	#1025 STEEL	
85012-25	7/8	½	.032	#1025 STEEL	
85012-26	2⅛	1 29/32	.032	BONE HARD FIBRE	
85012-27	1½	.191	.032	3S-½ H. ALUM.	
85012-28	3/4	.113	.032	3S-½ H. ALUM.	
85012-29	5/8	.113	.065	SAE F-50 FELT	
85012-30	½	.250	.062	#1025 STEEL	
85012-31	3/8	.045	.020	TYPE 347 ST. STL.	
85012-32	2⅛	1 9/16	1/8	ARMSTRONG CORK #NC-709	
85012-33	½	5/32	.062	VELLUMOID	
85012-34	3/4	7/16	.050	PYRALIN	

PART NO.	O. D.	I. D.	T	MATERIAL	REMARKS
85012-35	1½	.593	.125	#1025 STEEL	CODE NO. 129 221
85012-36	1¾	.516	.125	#1025 STEEL	CODE NO. 129 221
85012-37	2¼	1½	.125	MYCAR 30 SHORE DUR. PURCH. BUFFALO RUBBER CO.	
85012-38	2⅝	1½	.032	NEOPRENE & CORK GASKET CO. PURCH. ARMSTRONG CORK CO.	WAS 6-5107-2
85012-39	3/8	.125	.064	3S-½ H. ALUM.	
85012-40	3/8	.191	.062	#1025 STEEL	
85012-41	5/8	.343	.095	#1025 STEEL	
85012-42	3/4	.187	.032	#1025 STEEL	
85012-43	3/4	.375	.032	VELLUMOID	
85012-44	1¾	1.506 / 1.520	.125	#1025 STEEL	
85012-45	1⅝	.250	.062	#1025 STEEL	
85012-46	1 13/16	1½	.062	VELLUMOID	
85012-47	½	.191	.062	HARD FIBRE	
85012-48	1	.436 / .448	.095	#1025 STEEL	
85012-49	2 1/16	1¼	.030 OR .050	PYRALIN	
85012-50	1 13/16	1½	1/8	ARMSTRONG CORK #NC-709	
85012-51	½	¼	1/8	ARMSTRONG CORK #NC-709	
85012-52	7/8	.375 / .385	.095	#1025 STEEL	
85012-53	½	5/16	1/8	ARMSTRONG CORK #NC-709	
85012-54	7/8	281	.020	H.R. STEEL	
85012-55	4½	3 9/16	.050	PYRALIN	
85012-56	1	.3115 / .3135	.125	#1025 STEEL	
85012-57	1	.500	3/8	RUBBER-60 DUROMETER	
85012-58	3/4	.238 / .243	.012	ST. STL. TYPE 302 2D ANNEALED	
85012-59	3/4	.238 / .243	.018	ST. STL. TYPE 302 2D ANNEALED	
85012-60	9/16	5/32	1/16	FIBRE	
85012-61	1½	7/8	.125	ARMSTRONG CORK #NC-709	
85012-62	1⅛	.757	.062	#1025 STEEL	
85012-63	2¾	2	.032	52 S-½ H	
85012-64	1	.191	.032	#1025 STEEL	
85012-65	5/8	.250	.062	#1025 STEEL	
85012-66	1½	1 1/32	.125	#1025 STEEL	
85012-67	3/4	.312	.125	#1025 STEEL	

PART NO.	O. D.	I. D.	T	MATERIAL	REMARKS
85012-68	5/8	.375	.062	#1025 STEEL	
85012-69	5/8	.187	.095	#1025 STEEL	
85012-70	1 3/4	.328	.095	#1025 STEEL	
85012-71	1 3/8	5/8	3/16	JOHNS MANVILLE JEWETT PACKING TYPE #12-10	
85012-72	2½	2⅛	.020	24ST ALUM	
85012-73	3/4	7/16	.062	#1025 STEEL	
85012-74	1½	.390	.032	#1025 STEEL	
85012-75	1 3/16	.261	.064	24 ST ALUM.	
85012-76	½	.166	.032	ARMSTRONG CORK #NC-710	
85012-77	2¾	1¾	.050	PYRALIN	

NOTE:
SEE ALSO 80122 & 81342.

LET.	REVISION	DATE	BY
AU	-72 ADDED	11-22-50	FCS
AT	-71 ADDED	11-20-50	RC
AS	-65, -68, -69 & -70 ADDED	10-26-50	HRK
AR	-66 & -67 ADDED	10-9-50	FCS
AQ	-64 ADDED	9-22-50	FCS
AP	-63 ADDED	6-28-50	RC
AO	-62 ADDED	4-13-50	C.K.
AN	-61 ADDED	3-31-50	HRK
AM	-60 ADDED	1-30-50	K.D
AL	-58 & -59 ADDED	11-21-49	HRK
AK	-57 ADDED	11-18-49	C.K.
AJ	.125 WAS .062 FOR T FOR -56	10-24-49	R.R.
AH	-54, -55 & -56 ADDED	9-2-49	R.R.
AG	REDRAWN & -53 ADDED	8-4-49	HRK
AF	REVISION	DATE	BY
AZ	-77 ADDED	4-18-51	C.K.
AY	-75 & -76 ADDED	2-26-51	C.K.
AX	2 1/2 O.D. WAS 2 3/16 FOR -78	2-13-51	I.M.R.
AW	-74 ADDED	1-23-51	C.K.
AV	-73 ADDED	12-7-50	HRK

THIS DRAWING IS THE PROPERTY OF THE PIPER AIRCRAFT CORP. AND ITS POSSESSION BY UNAUTHORIZED PERSONS SHALL NOT BE CONSTRUED AS PERMISSION TO REPRODUCE FOR SALE, IN WHOLE OR IN PART, ANY DEVICES SHOWN THEREON

MODEL	PER PLANE	NEXT ASSEMBLY	SUPERSEDES	SUP. BY

NOTED

PART No. | NO. REQ. | MATERIAL

SCALE | TOTAL WT.—LBS.

FINISH—PIPER SPECIFICATION #10

MANUFACTURING PRACTICES—PIPER SPECIFICATION #9

WASHERS
SHEET III

PIPER AIRCRAFT CORP.
LOCK HAVEN, PENNA.

DRAFTSMAN	CHECKER	STANDARDS
H.R.K. 8-4-49	C.E.K. 8-4-49	

85012

A825

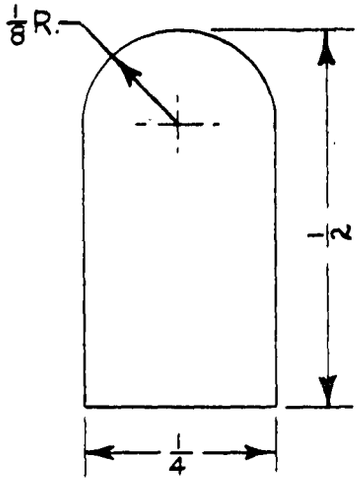

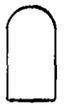

ACTUAL SIZE



MATERIAL: 1/4 x 1/2 SITKA SPRUCE OR WHITE PINE
WT. PER LINEAL FT.: .036 LBS.

LET.	REVISION	DATE	SR.	BY
A	ALTERNATE MATL. ADDED	11-23-45		I. M. M.

MODEL	PER SHIP	NEXT ASSEMBLY	SUPERSEDES	SUPERSEDED BY

PIPER AIRCRAFT CORP.
LOCK HAVEN, PENNA.

PART No.	No. REQ.	MATERIAL

SCALE 4 x SIZE

SECTION-WOODEN STRIP

DRAWN	CHECKED	APPROVED
W. TIMMONS 9-8-43	C. K. 9-17-43	

85021

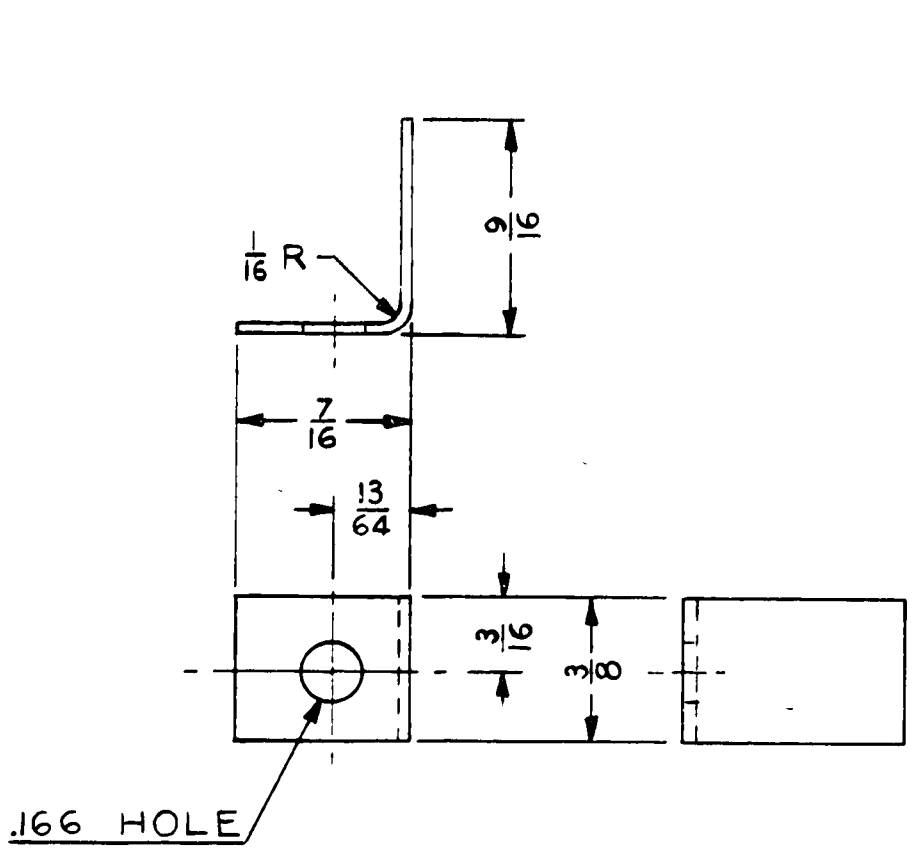

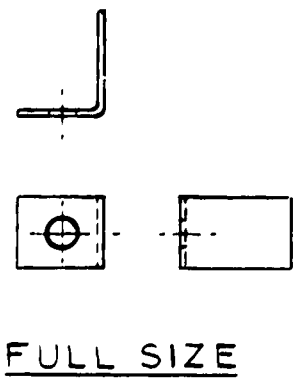

FULL SIZE

								.020 × 3/8 × 15/16	H.R. STEEL
							PART NO.	NO. REQ.	SIZE / MATERIAL
									DESCRIPTION

SCALE TWICE SIZE & NOTED | TOTAL WT.—LBS.

FINISH—PIPER SPECIFICATION # 10

MANUFACTURING PRACTICES—PIPER SPECIFICATION # 9

MODEL	PER PLANE	NEXT ASSEMBLY	SUPERSEDES	SUP. BY

THIS DRAWING IS THE PROPERTY OF THE PIPER AIRCRAFT CORP. AND ITS POSSESSION BY UNAUTHORIZED PERSONS SHALL NOT BE CONSTRUED AS PERMISSION TO REPRODUCE FOR SALE IN WHOLE OR IN PART ANY DEVICES SHOWN THEREON.

ANGLE—IGNITION SWITCH COVER ATTACHMENT

LET	REVISION	DATE	BY
D	REDRAWN & REVISED	6-20-51	C.K

PIPER AIRCRAFT CORP.
LOCK HAVEN, PENNA.

DRAFTSMAN	CHECKER	STANDARDS
C.E.K. 6-20-51	H.R.K. 6-21-51	

85031

389

A389

This page intentionally left blank.

SECTION NO	T	MATERIAL	WT. PER LIN. FT.
85161	.025	1020 STEEL	.20 LB'S
85161-2	.030	1020 STEEL	.358 LB'S

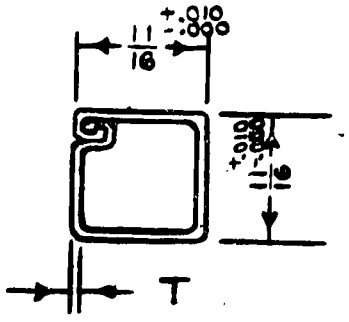

A D

TUBE WITH SPECIFIED CROSS SECTION FOR 85161
MAY BE PURCHASED FROM
VAN HUFFEL TUBE CORP. — SECTION 3012

B

LIMITS, SHOP PRACTICES AND FINISH. UNLESS OTHERWISE NOTED, TO BE IN ACCORDANCE WITH PIPER SPECIFICATIONS #9 AND #10.

LET.	REVISION	DATE	BY
D	.025 WAS .022 FOR 85161	12-14-49	K.D.
C	TOL. ADDED TO 11/16 DIMS.	4-3-46	HMZ
B	NOTE REVISED	3-1-44	CHS
A	-2 AND TABLE ADDED	3-1-44	CHS

MODEL	PER SHIP	NEXT ASSEMBLY	SUPERSEDES	SUP. BY

PIPER AIRCRAFT CORP.
LOCK HAVEN, PENNA.

PART NO. | NO. REQ. | NAME
MATERIAL
SCALE FULL SIZE | TOTAL WT. - LBS.
FINISH

SECTION — SQUARE TUBE

DRAWN	CHECKED	APPROVED
R. D. R. 12-9-43	C. K. 12-27-43	

85161

391

A391

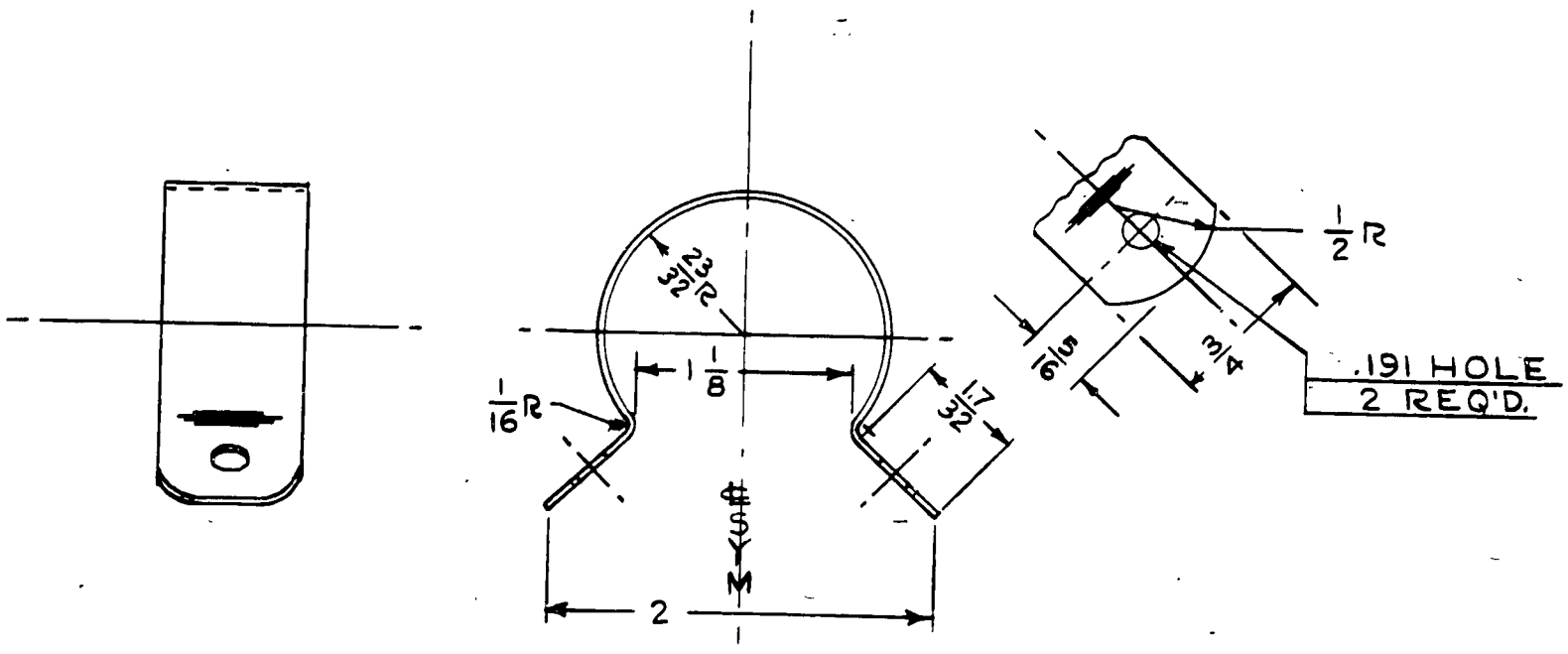

*NOTE: OPTIONAL EQUIPMENT FOR MODEL J3

LIMITS, SHOP PRACTICES AND FINISH, UNLESS OTHERWISE NOTED, TO BE IN ACCORDANCE WITH PIPER SPECIFICATIONS #9 AND #10.

LET.	REVISION	DATE	BY
B	J5C NA. 10450 WAS 80352	1-14-46	BBC
A	L-14 MODEL REF. ADDED	6-14-45	I.DB

MODEL	PER SHIP	NEXT ASSEMBLY	SUPERSEDES	SUP. BY
L-14	1	91300		
*J3	1	80352	80371	
J5C	1	10450	80371	

PIPER AIRCRAFT CORP.
LOCK HAVEN, PENNA.

PART No.	No. REQ.	SIZE	DESCRIPTION
		.032 × 3/4 × 4 21/32	#1025 STEEL
		MATERIAL	

SCALE FULL SIZE — TOTAL WT. - LBS.
FINISH

CLAMP – FLOAT
STABILIZER YOKE BUNGEE

DRAWN	CHECKED	APPROVED
J. CROWLEY 12-22-43	C.K. 12-23-43	

85211

392

A392

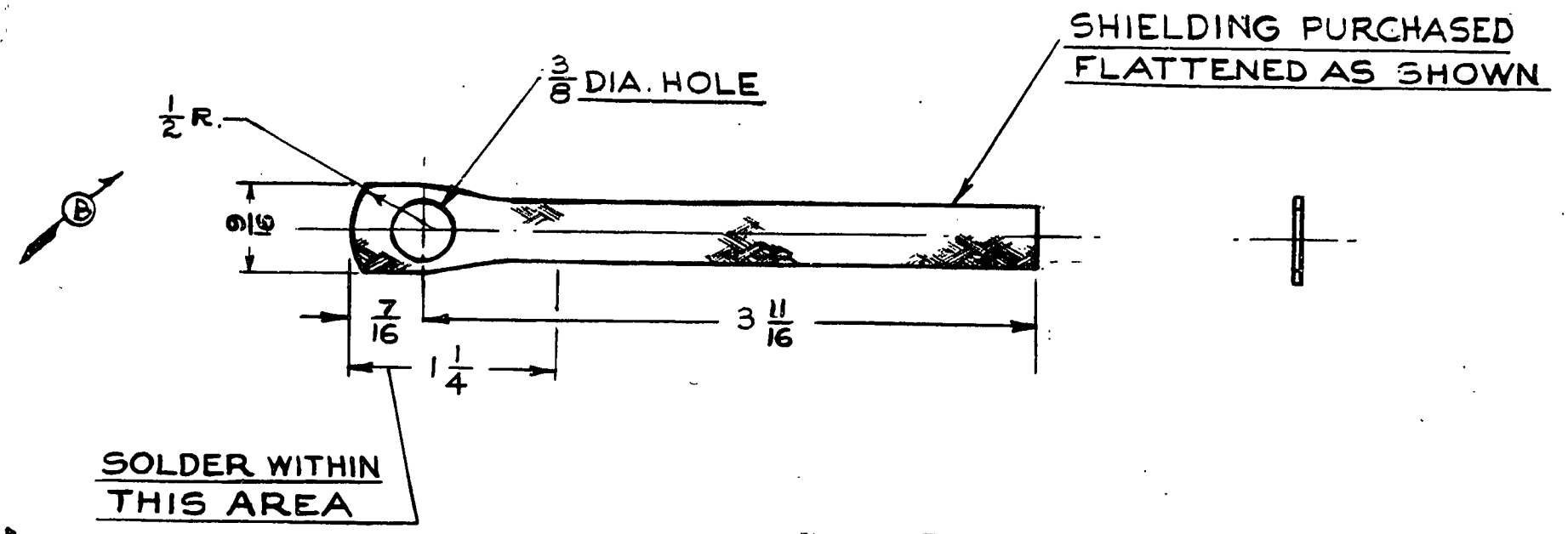

NOTE

*OPTIONAL EQUIPMENT FOR MODEL J3C-65

D C LIMITS, SHOP PRACTICES AND FINISH. UNLESS OTHERWISE NOTED, TO BE IN ACCORDANCE WITH PIPER SPECIFICATIONS #9 AND #10.

LET.	REVISION	DATE	BY
E	J5-C MODEL REF. ADDED	2-20-46	C.E.V.
D	L-14 MODEL REF. ADDED	2-28-45	E.L.N.
C	L-4A N.A. 75224 WAS 72883	2-20-45	E.L.N.
B	1/2 R. WAS 5/16 R.	4-29-44	I.D.B.
A	NOTE ADDED	2-16-44	I.D.B.

MODEL	PER SHIP	NEXT ASSEMBLY	SUPERSEDES	SUP. BY
J5-C	2	10070		
L-14	2	90170		
J3C-65	2	72883		
L-4A	2	75224		

PIPER AIRCRAFT CORP.
LOCK HAVEN, PENNA.

PART No.	No. REQ.	SIZE	DESCRIPTION / MATERIAL
		4 1/8 LONG	SHIELDING #692D PURCH PACKARD DIV. GENERAL MOTOR CORP.

SCALE FULL SIZE | TOTAL WT.-LBS.
FINISH

WIRE – ENGINE GROUND

DRAWN	CHECKED	APPROVED
KELLER 1-8-44	M.G.S. 1-10-44	

85341

393

A393

WAS 8034
D8025-A

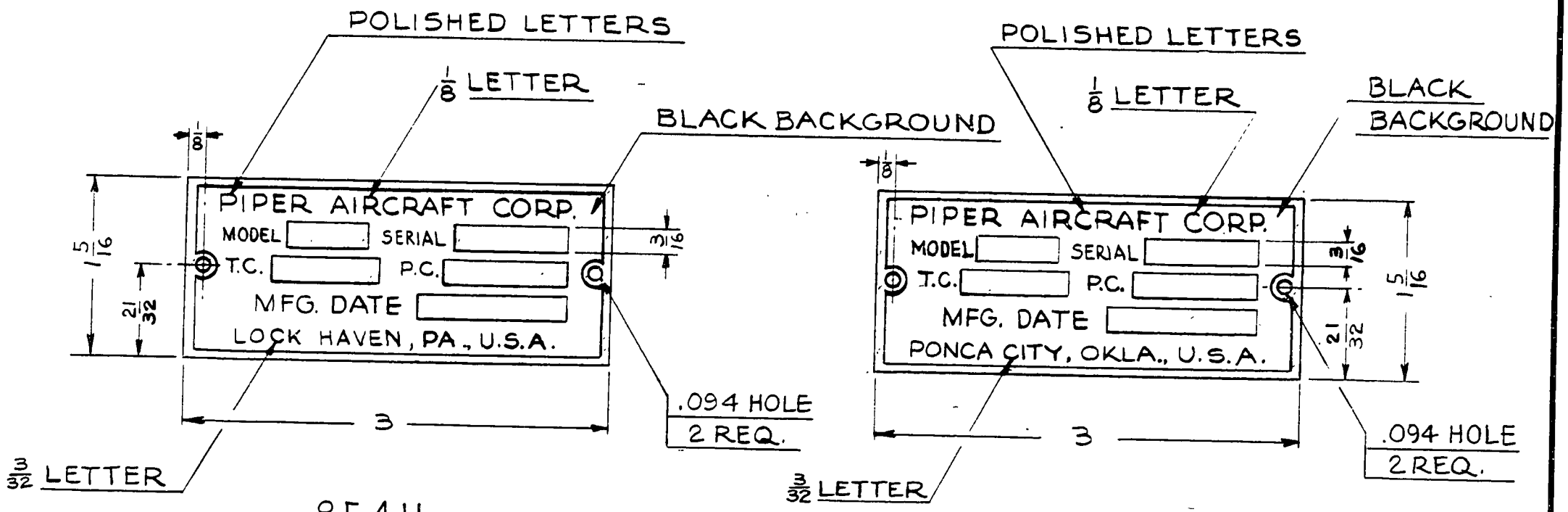

		.032 x 1 5/16 x 3	3S-½ H ALUM.
	PART No.	No. REQ.	SIZE / DESCRIPTION
			MATERIAL
SCALE FULL SIZE			TOTAL WT.—LBS.
FINISH—PIPER SPECIFICATION #10			
MANUFACTURING PRACTICES—PIPER SPECIFICATION #9			

PLACARD - SERIAL NUMBER

MODEL	PER PLANE	NEXT ASSEMBLY	SUPERSEDES	SUP. BY
J3	1	24176		

LET.	REVISION	DATE	BY
D	REDRAWN & REVISED	9-26-46	C.E.K

THIS DRAWING IS THE PROPERTY OF THE PIPER AIRCRAFT CORP. AND ITS POSSESSION BY UNAUTHORIZED PERSONS SHALL NOT BE CONSTRUED AS PERMISSION TO REPRODUCE FOR SALE, IN WHOLE OR IN PART, ANY DEVICES SHOWN THEREON.

PIPER AIRCRAFT CORP.
LOCK HAVEN, PENNA.

DRAFTSMAN	CHECKER	STANDARDS
C.E.K 9-26-46	I.D.B 9-26-46	

85411

PENCILTEX A. & B. SMITH CO., PGH., PA.

395

A395

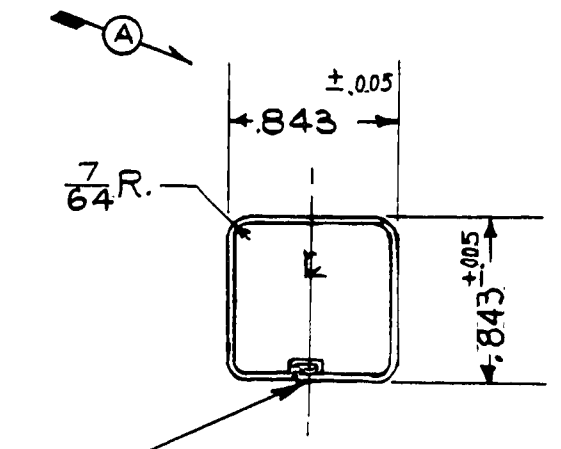

℄ OF LUG WITHIN .015
OF ℄ OF TUBE

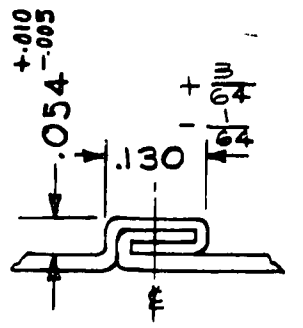

DETAIL OF LOCK
4 X SIZE

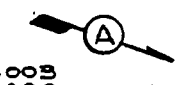

.020 +.003 -.000 GA. #1010-1020 STEEL

MINIMUM { 36,000#/SQ. IN. YIELD
55,000#/SQ.IN. TENSILE STRENGTH

TUBE WITH SPECIFIED CROSS SECTION
MAY BE PURCHASED FROM
VAN HUFFEL TUBE CO. — SECTION NO. 466

"LIMITS, SHOP PRACTICES AND FINISH. UNLESS OTHERWISE NOTED, TO BE IN ACCORDANCE WITH PIPER SPECIFICATIONS #9 AND #10.

PART No.	No. REQ.	MATERIAL

SCALE FULL SIZE & NOTED | TOTAL WT.- LBS.
FINISH

SECTION — SQUARE TUBE

LET.	REVISION	DATE	BY
A	.843 WAS .834; #1010-1020 ST'L. WAS #1025 ST'L	11-14-45	L.R.

MODEL	PER SHIP	NEXT ASSEMBLY	SUPERSEDES	SUP. BY

PIPER AIRCRAFT CORP.
LOCK HAVEN, PENNA.

DRAWN	CHECKED	APPROVED
J. BARNARD 5-30-44	R. E. T. 6-3-44	

85551

396

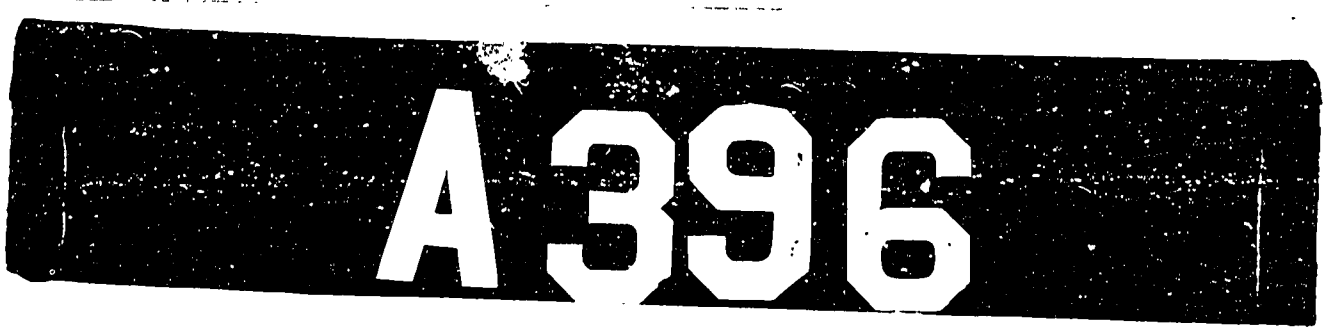

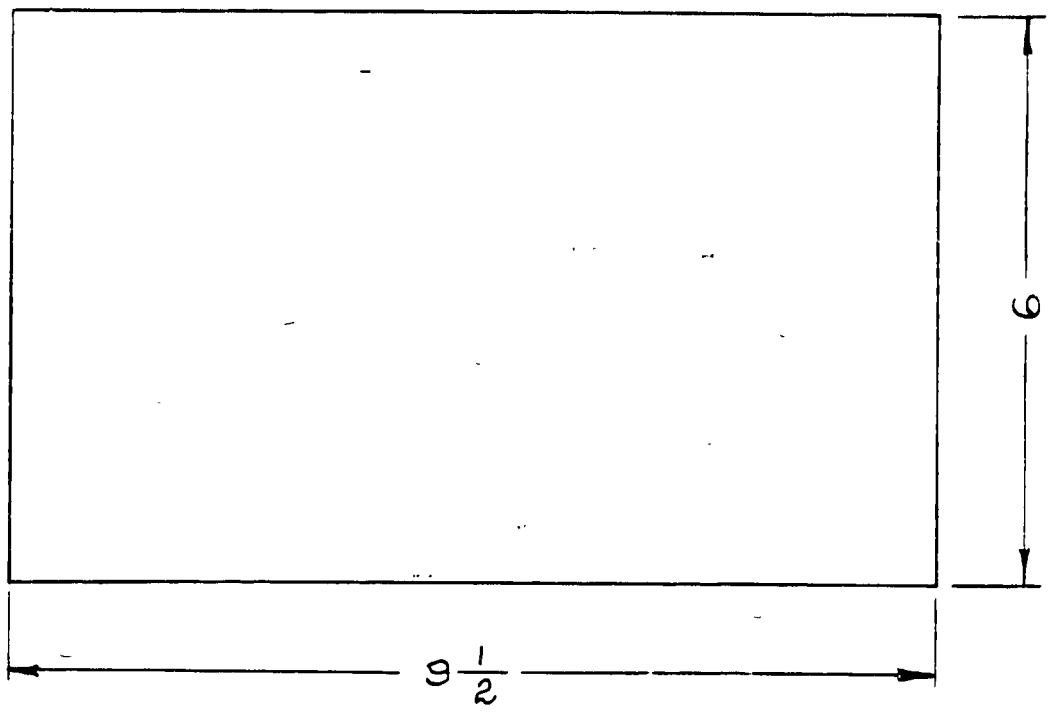

K	FABRIC SPEC. ALT. REM.	10-28-46	I.D.B.					
J	4 PER PLANE WAS 2 FOR J3	10-8-46	HMZ	L-14	12	30402 30403 91180		
H	2 PER PLANE WAS 8 FOR J3	8-7-46	L.R.	J5	8	16674		
G	24165 & 16243 N.A. REM. FOR J3	8-7-46	L.R.	J4	6	16684		
F	J5, J4, J5C MODEL REF. CANCELED	8-7-46	L.R.	J5C	12	24165	16243	
E	ALTERNATE SPEC. ADDED	3-22-46	L.R.	L-4A	8	R42355 13963		
D	J5C NA. 14053 REMOVED	11-28-45	HMZ	J3	4	16243 13967		
C	L-14 MODEL REF. ADDED	6-14-45	T.M.M.	MODEL	PER PLANE	NEXT ASSEMBLY	SUPERSEDES	SUP. BY
B	J3 & L-4A PER PLANE 8 WAS 4	2-3-45	HM.Z					
A	J5 & J4 MODEL REF. ADDED	12-1-44	J.B.W.					
LET.	REVISION	DATE	BY					

PENCILTEX A. & B. SMITH CO., PGH., PA.

PIPER AIRCRAFT CORP.
LOCK HAVEN, PENNA.

		6×9½	FABRIC-SAE SPEC. #AMS 3806	K
PART No.	No. REQ.	SIZE	DESCRIPTION	
		MATERIAL		
SCALE 6 IN = 1 FT.		TOTAL WT.—LBS.		

FINISH—PIPER SPECIFICATION #10

MANUFACTURING PRACTICES—PIPER SPECIFICATION #9

FABRIC — INSPECTION WINDOW FRAME ATTACHMENT

DRAFTSMAN	CHECKER	STANDARDS
I. BARNARD	R.E.T.	
9-1-44	9-1-44	

85641

D K

397

A397

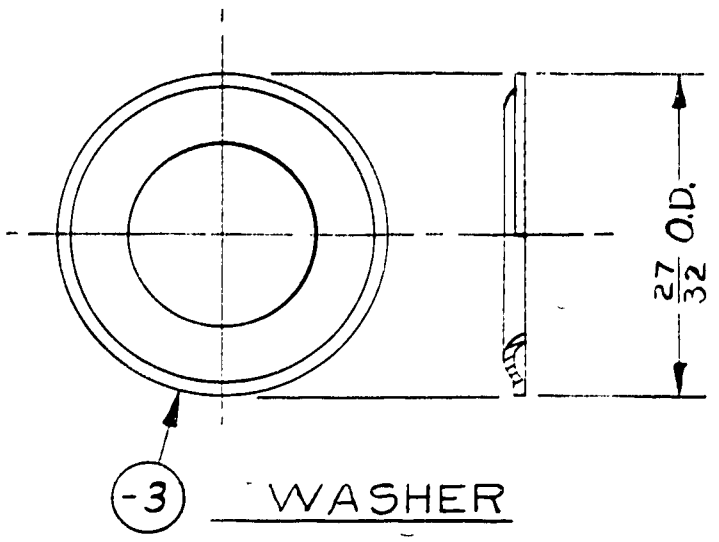

-3 WASHER

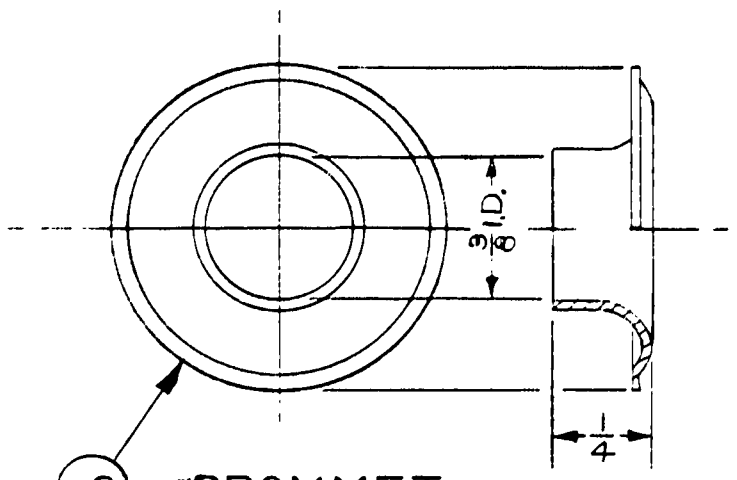

-2 GROMMET

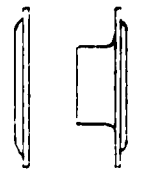

ACTUAL SIZE

#2 GROMMET & WASHER (J2-848)
PURCHASED-EDWIN B. STIMPSON CO.
BROOKLYN N.Y.

PART No.	No. REQ.	MATERIAL
-3	X	BRASS
-2	X	BRASS

SCALE TWICE SIZE & NOTED | TOTAL WT.—LBS.

FINISH—PIPER SPECIFICATION #10

MANUFACTURING PRACTICES—PIPER SPECIFICATION #9

GROMMET - PLAIN

LET.	REVISION	DATE	BY
C	REDRAWN & REVISED	7-20-45	P.T.

MODEL	PER PLANE	NEXT ASSEMBLY	SUPERSEDES	SUP. BY

PIPER AIRCRAFT CORP.
LOCK HAVEN, PENNA.

DRAFTSMAN	CHECKER	STANDARDS
P.B.T. 7-20-45	R.E.T. 7-20-45	

85881

PENCILTEX A. B. SMITH CO., PGH., PA.

398

A398

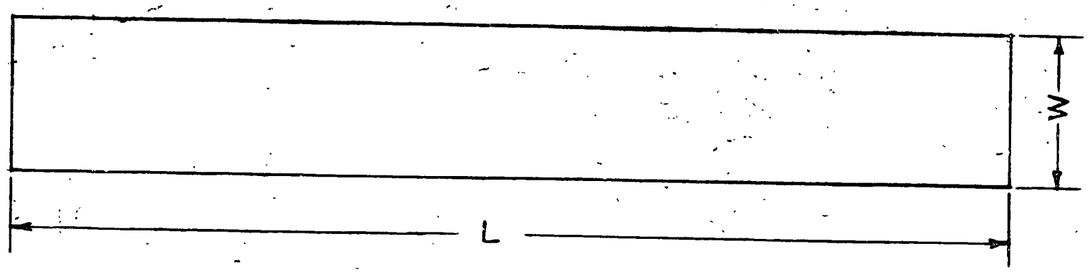

NOTE:
SEE ALSO DWG.
84702 & 10016

PART NO.	L	W	MODEL	PERSHIP	NEXT ASSEMBLY
86082-2	5 3/4	1/8	L-14	1	90892
86082-3	16	1/8	L-14	1	90850
86082-4	14 3/4	1	L-14	1	90852
86082-5	14 11/32	1	L-14	1	90854
86082-6	16 1/8	1/8	L-14	2	90891
86082-7	16 7/8	1 1/8	L-14	1	90886
86082-8	26 1/4	1 1/8	L-14	2	90889, 90890
86082-9	18 3/16	1/8	L-14	2	91527
86082-10	18 1/2	1 1/8	L-14	1	90894
86082-11	8 15/16	1 1/8	L-14	2	90895, 90896
86082-12	16 5/8	1/8	L-14	1	90965
86082-13	15 9/16	1/8	L-14	8	90925, 91505
86082-14	17 1/16	1/8	L-14	1	90928
86082-15	11 1/8	1/8	L-14	1	90929
86082-16	6 1/2	1/8	L-14	3	91096, 90932
86082-17	16 3/8	1/8	L-14	1	91527
86082-18	13 15/16	1/8	L-14	1	91513
86082-19	12 15/16	1/8	L-14	1	90938
86082-20	9	1/8	L-14	1	90933
86082-21	33 1/8	1 1/8	L-14	1	90899
86082-22	30 11/16	1/2	L-14	2	90931
86082-23	26 7/8	1/2	L-14	2	90901
86082-24	13 1/8	1 1/8	L-14	2	90902
86082-25	30 1/16	1/2	L-14	2	91048, 91049
86082-26	35 1/2	1/2	L-14	2	91050, 91051

PART NO.	L	W	MODEL	PERSHIP	NEXT ASSEMBLY
86082-27	16 1/8	1 1/8	L-14	2	91112, 91113
86082-28	33 5/8	1/2	L-14	2	91116
86082-29	32 1/4	1/2	L-14	2	91118
86082-30	28 5/8	1/4	L-14	1	91179
86082-31	27 1/8	1 3/8	L-14	4	91177, 91178, 91482, 91483
86082-32	30 1/2	1/2	L-14	1	91176
86082-33	15 1/2	1/2	L-14	2	91175
86082-34	38	1/2	L-14	2	91174
86082-35	22 1/2	1 1/2	L-14	1	91181
86082-36	56	1/2	L-14	1	91180
86082-37	46 1/4	1 1/8	L-14	4	91182, 91183
86082-38	30 1/4	3/4	L-14	4	90600
86082-39	29 1/16	3/4	L-14	4	90600
86082-40	21 5/16	7/8	L-14	2	91045, 91047
86082-41	23 1/16	3/4	L-14	1	91501
86082-42	15 7/8	7/8	L-14	8	91505
86082-43	1 1/2	7/8	L-14	2	91505, 90851
86082-44	7 7/16	7/8	L-14	1	91507
86082-45	15 5/8	7/8	L-14	1	91511
86082-46	10 7/8	7/8	L-14	1	91508
86082-47	1 1/16	7/8	L-14	1	91509
86082-48	37	3/4	L-14	1	91503

	REVISION	DATE	BY	LET
AG	J5C 6 PER SHIP WAS 4 FOR-26	3-26-45	L.M.M	V
AF	J5C N.A. 10519 ADDED FOR-26	3-26-45	L.M.M	U
AE	J5C MODEL REF. ADDED FOR-26	3-20-45	L.M.M	T
AD	J5C MODEL REF. REINSTATED FOR-26	12-5-45	H.M.K	S
AC	J5C MODEL REF. CANCELED FOR-26	11-7-45	H.M.K	R
AB	J5C MODEL REF. ADDED TO-26	10-15-45	H.M.K	Q
AA	ON-43 N.A. J5C-5 ADDED, 2 WAS 1	8-2-45	C.R.M	P
Z	ON-9 NEXT ASSY 90891 REM. 2 WAS 3	8-2-45	C.R.M	O
Y	86082-6 REINSTATED	8-2-45	C.R.M	N
X	2.095% N.A. ADDED; 2 PER SHIP WAS 1 FOR-11	7-27-45	L.R.M	M
LET	REVISION	DATE	BY	LET

	REVISION	DATE	BY	LET
W	L-14 N.A. 91527 WAS 90956 FOR-17	7-12-45	L.D.B	L
V	L-14 N.A. 91505 WAS 90969 FOR-15	7-12-45	L.D.B	K
U	L-14 PER SHIP 3 WAS 2 FOR-9	7-12-45	L.D.B	J
T	L-14 N.A. 91527 ADDED FOR-9	7-12-45	L.D.B	H
S	L-14 MODEL REF. CANCELED FOR-26-29	6-14-45	L.M.M	G
R	L-14 N.A. 91513 WAS 90958 FOR-18	7-12-45	L.D.B	F
Q	DWG. REF. 10016 ADDED	7-6-45	L.D.M	E
P	-41 TO -48 INC. ADDED	7-6-45	L.D.M	D
O	L-14 N.A. 90971 REM. FOR-11	7-2-45	L.M.M	C
N	L-14 N.A. 90896 REM. FOR-11	7-2-45	L.M.M	B
M	L-14 N.A. ADDED FOR-36 TO-37 INC.	6-14-45	L.M.M	A

	REVISION	DATE	BY	LET
L	L-14 N.A. 91124 REM. FOR-36 TO-37 INC.	6-14-45	L.M.M	
K	L-14 N.A. 90932 ADDED FOR-16	6-14-45	L.M.M	
J	1 PER SHIP WAS 2 FOR-11	6-14-45	L.M.M	
H	L-14 PER SHIP 4 WAS 2 FOR-31 WAS 2 FOR-15	6-14-45	L.M.M	
G	L-14 MODEL REF. CANCELED FOR-28-29	6-14-45	L.M.M	
F	ON -37 W -1/8 WAS 1/4	5-28-45	J.B.M	
E	1/2 DIM FOR W WAS 3/8 ON-22-23-25-26-28-29	5-3-45	L.M.M	
D	-38, -39 & -40 ADDED	3-23-45	L.D.B	
C	L-14 REF. ADDED FOR-2 TO-STING	3-1-45	H.M.Z	
B	-30-31-32-33-34-35-36-37 ADDED	2-21-45	H.M.Z	
A	-25-26-27-28-29 ADDED	2-8-45	H.M.Z	

MODEL	PER SHIP	NEXT ASSEMBLY	SUPERSEDES	SUP. BY

LIMITS, SHOP PRACTICES AND FINISH. UNLESS OTHERWISE NOTED, TO BE IN ACCORDANCE WITH PIPER SPECIFICATIONS #9 AND #10.

PIPER AIRCRAFT CORP.
LOCK HAVEN, PENNA.

PART NO.	NO. REQ.	.065 X NOTED	SAE F-50 FELT
		SIZE	DESCRIPTION
		MATERIAL	
SCALE FULL SIZE		TOTAL WT.- LBS.	
FINISH			

STRIPS - FELT
(SHEET 2)

DRAWN	CHECKED	APPROVED
J. WRIGHT 1-29-44	R.E.T. 1-30-45	

86082

A688

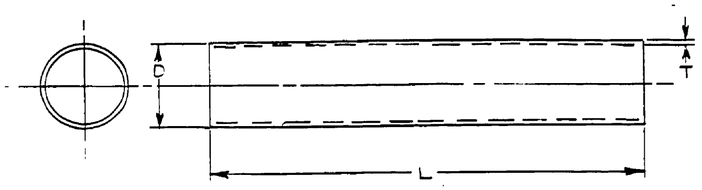

PART. NO.	L	D	T	MATERIAL	REMARKS
86062-2	9	51/64	.035	*4130 STEEL	
86062-3	3 1/2	1/4	.032	35-0 ALUM OR COPPER	
86062-4	28 1/2	1/4	.032	35-0 ALUM OR COPPER	
86062-5	26 5/8	1/4	.032	35-0 ALUM OR COPPER	
86062-6	5	3/4	.058	*1025 STEEL	
86062-7	17 5/8	5/8	.065	*4130 STEEL	
86062-8	35 1/8	1/4	.032	35-0 ALUM.	
86062-9	1 7/8	3/8	.028	*1025 SEAMLESS STL TUBE	
86062-10	9 7/8	1/4	.032	35-0 ALUM.	
86062-11	3 1/2	1/2	.028	*1025 STEEL	
86062-12	115 1/2	1/2	.035	35-0 ALUM.	
86062-13	115 1/2	3/8	.032	35-0 ALUM.	
86062-14	31	1/2	.035	35-0 ALUM.	
86062-15	31	3/8	.032	35-0 ALUM.	
86062-16	15 5/16	5/16	.032	COPPER	
86062-17	1	7/8	.035	25-1/2H ALUM	
86062-18	15	1/4	.032	35-0 ALUM.	
86062-19	12	1/4	.032	35-0 ALUM.	
86062-20	35 3/4	1/4	.032	35-0 ALUM.	
86062-21	32 1/2	1/4	.032	35-0 ALUM. OR COPPER	
86062-22	5	1 1/4	.095	*4130 STEEL	
86062-23	5	19/64	.035	*4130 STEEL	
86062-24	67 7/8	1/2	.035	35-0 ALUM.	
86062-25	9/16	3/16	.032	COPPER	
86062-26	25	3/8	.032	35-0 ALUM.	
86062-27	25	1/2	.035	35-0 ALUM.	
86062-28	112 1/2	3/8	.032	35-0 ALUM.	
86062-29	112 1/2	1/2	.035	35-0 ALUM.	
86062-30	3 1/16	1/4	.028	*1025 STEEL	
86062-31	4 3/32	1/4	.028	*1025 STEEL	
86062-32	2 3/8	2	.035	ST STL TYPE 347 ANNEALED	
86062-33	6 23/32	3/16	.010	35-0 ALUM.	
86062-34	7/16	3/16	.010	35-0 ALUM.	

PART NO	L	D	T	MATERIAL	REMARKS
86062-35	4	.665	.035	*4130 STEEL	
86062-36	3 1/2	3/4	.035	*1025 STEEL	
86062-37	112 1/2	1/2	.065	35-0 ALUM.	
86062-38	25	1/2	.065	35-0 ALUM.	
86062-39	4 3/4	1/4	.028	*1025 STEEL	
86062-40	16	.94 5/937	.035	TYPE 347 ST. STEEL SEAMLESS	MIN. YIELD POINT 70000 PSI M.U.T.S. 90000 PSI
86062-41	8	.750/747	.049	TYPE 347 ST. STEEL SEAMLESS	MIN. YIELD POINT 70000 PSI. M.U.T.S. 90000 PSI FINISH OUTSIDE TO REMOVE SCALE
86062-42	1 1/2	5/16	.028	*1025 STEEL	
86062-43	1/2	5/16	.058	*1025 STEEL	
86062-44	5 3/4	5/8	.028	*1025 STEEL	
86062-45	10 5/8	5/8	.028	*1025 STEEL	
86062-46	21 5/16	1 1/8	.049	*4130 STEEL	
86062-47	5 1/4	1/4	.028	*1025 STEEL	
86062-48	80 3/4	1/2	.065	35-0 ALUM.	
86062-49	4 7/8	5/8	.035	*1025 STEEL	
86062-50	8	.665	.035	*4130 STEEL	
86062-51	11	.665	.035	*4130 STEEL	
86062-52	8 1/2	3/8	.028	*1025 STEEL	
86062-53	12	.94 8/937	.035	*4130 STEEL	
86062-54	3/4	1/2	.035	*1025 STEEL	
86062-55	8 1/2	.667/660	.035	*4130 STEEL	
86062-56	8.063	1.247/1.243	.049	*4130 SST	
86062-57	1.780	1 3/8	.058	*1025 S.S.T.	
86062-58	4 29/32	1/4	.028	*1025 STL.	

PART NO.	L	D	T	MATERIAL	REMARKS

NOTE: SEE ALSO DWG. 80132

LET.	REVISION	DATE	BY
AT	-58 ADDED	1-23-51	C.K
AS	-56 & -57 ADDED	11-3-50	F.C.S
AR	-55 ADDED	9-6-50	FCS
AQ	-54 ADDED	8-11-50	C.K
AP	-53 ADDED	8-2-50	K.D
AO	-52 ADDED	7-12-50	K.D
AN	REDRAWN WITHOUT CHANGE	7-29-49	RM

THIS DRAWING IS THE PROPERTY OF THE PIPER AIRCRAFT CORP. AND ITS POSSESSION BY UNAUTHORIZED PERSONS SHALL NOT BE CONSTRUED AS PERMISSION TO REPRODUCE FOR SALE, IN WHOLE OR IN PART, ANY DEVICES SHOWN THEREON

MODEL	PER PLANE	NEXT ASSEMBLY	SUPERSEDES	SUP. BY

PIPER AIRCRAFT CORP.
LOCK HAVEN, PENNA.

NOTED

PART No. | NO. REQ. | MATERIAL

SCALE | TOTAL WT.—LBS.

FINISH—PIPER SPECIFICATION #10

MANUFACTURING PRACTICES—PIPER SPECIFICATION #9

TUBES (SHEET 4)

DRAFTSMAN	CHECKER	STANDARDS
R.T.M. 7-29-49	H.R.K. 8-4-49	

86062

82

A826

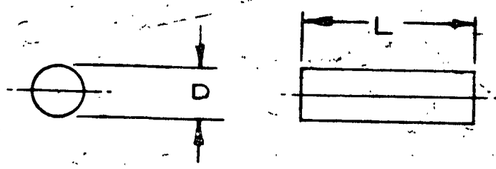

PART NO.	D	L	MATERIAL	REMARKS
86092-2	3/32	1/4	1010 C.F. STEEL WIRE	
86092-3	.104	14 13/16	TINNED STL. WIRE	WAS PART J2-74
86092-4	3/32	2 7/16	1010 C.F. STL. WIRE	
86092-5	1/16	1	1010 C.F. ST'L. WIRE	
86092-6	.078	3 3/4	TYPE 304 STAINLESS STEEL HARD DRAWN, BRIGHT FINISH	
86092-7	.078	3 1/8	1010 C.F. STL. WIRE	
86092-8	.125	9/32	MILD STEEL	
86092-9	.078	24 3/8	TYPE 304 ST. STL. WIRE DRAWN, BRIGHT FINISH	
86092-10	1/8	5 7/8	HIGH TEST WELDING ROD	
86092-11	.078	17 1/8	1010 C.F. ST'L WIRE	
86092-12	.078	12 7/8	1010 C.F. ST'L WIRE	
86092-13	.090	25 3/4	1010 C.F. ST'L WIRE	
86092-14	.090	10	1010 C.F. STL. WIRE	
86092-15	.090	2 3/4	1010 C.F. ST'L WIRE	
86092-16	1/8	3 3/4	WELDING ROD	
86092-17	1/8	3 7/16	1010 C.F. STEEL WIRE	WAS 21966-9
86092-18	.040	7 1/16	STAINLESS STEEL	
86092-19	1/8	1/2	WELDING ROD	
86092-20	.078	25 1/4	1010 C.F. STL. WIRE	
86092-21	3/16	19/32	1010 C.F. STL. WIRE	
86092-22	.078	9/16	1010 C.F. STL. WIRE	
86092-23	.090	20	1010 C.F. STL. WIRE	

PART NO.	D	L	MATERIAL	REMARKS
86092-24	1/8	1 3/4	1010 C.F. STL. WIRE	
86092-25	5/16	1 1/4	C.F. STEEL	
86092-26	1/8	1	1010 C.F. STL. WIRE	
86092-27	1/16	1/2	1010 C.F. STL. WIRE	
86092-28	3/8	1	C.F. STEEL	
86092-29	1/8	5/8	WELDING ROD	
86092-30	1/4	1 5/8	C.F. STEEL	
86092-31	1/8	15/16	1010 C.F. STL. WIRE	
86092-32	1/8	2 1/16	WELDING ROD	
86092-33	.090	25 1/2	1010 C.F. STL. WIRE	
86092-34	1/8	1 1/4	WELDING ROD	
86092-35	1/8	5	1010 C.F. STL.	
86092-36	1/8	3/8	WELDING ROD	
86092-37	1/8	2 7/8	WELDING ROD	

PART NO.	ID	L	MATERIAL	REMARKS

AJ	-36, -37 ADDED	2-13-51	H.K.
AH	-35 ADDED	5-10-50	C.K.
AG	-34 ADDED	1-3-50	K.D.
AF	-33 ADDED	12-21-49	
AE	-32 ADDED	11-1-49	C.K.
AD	-31 ADDED	10-6-49	C.K.
AC	-29, -30 ADDED	7-13-49	C.K.
AB	-28 ADDED	1-4-49	R.C.
AA	-26, -27 ADDED	6-11-48	R.M.
Z	-25 ADDED	5-25-48	H.K.
Y	-24 ADDED	2-5-48	
X	-23 ADDED	9-26-47	H.K.
W	-22 ADDED	7-15-47	
V	-21 ADDED	5-9-47	H.K.

U	-20 ADDED	2-26-47	C.E.K.
T	-19 ADDED	11-25-46	H.M.Z.
S	ST. STEEL WAS 10 WIRE FOR -18	7-8-46	I.D.B.
R	-18 ADDED	6-5-46	E.L.W.
Q	-17 ADDED	5-3-46	B.C.
P	-16 ADDED	3-28-46	H.M.Z.
O	-15 ADDED	12-12-45	I.D.B.
N	12 WAS 16 FOR -12	11-14-45	P.A.M.
M	-14 ADDED	11-8-45	
L	-11, -12 & -13 ADDED	10-5-45	

K	-10 ADDED	7-5-45	I.M.P.
J	-9 ADDED	5-22-45	E.L.W.
H	L DIM. FOR -4, 2 3/16 WAS 1	5-22-45	E.L.W.
G	-8 ADDED	5-3-45	I.M.P.
F	-7 ADDED	4-18-45	I.D.B.
E	-6 ADDED	3-29-45	H.M.Z.
D	DN -4 1 1/16 WAS 1 1/8	3-22-45	I.D.B.
C	-5 ADDED	3-5-45	I.M.P.
B	-4 ADDED	2-27-45	
A	-3 ADDED	2-2-45	D.R.

NOTE:
SEE ALSO DWG. 81761

LIMITS, SHOP PRACTICES AND FINISH, UNLESS OTHERWISE NOTED, TO BE IN ACCORDANCE WITH PIPER SPECIFICATIONS #9 AND #10.

REVISION	DATE	BY	CHK

MODEL	PER SHIP	NEXT ASSEMBLY	SUPERSEDES	SUP. BY

PIPER AIRCRAFT CORP.
LOCK HAVEN, PENNA.

PART No.	NO. REQ.	NOTED SIZE	NOTED DESCRIPTION
		MATERIAL	
SCALE		TOTAL WT. - LBS.	
FINISH			

PINS & RODS
(SHEET 2)

L. McNERNEY	R.E.T.		
2-3-43	2-3-43		
DRAWN	CHECKED	APPROVED	86092

A689

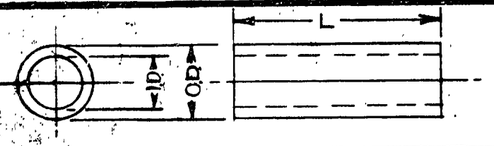

PART NO.	O.D.	I.D.	L	MAT'L	REMARKS
86102-2	.250	.190 .195	.344	*1025 STL.	
86102-3	.375	.308 .313	3/4	*1025 STL.	
86102-4	.433	.313 .318	1 1/8	*1025 STL.	
86102-5	1/4	.136	L	2S-1/2 H. ALUM.	
86102-6	.250 .254	.164 .169	1/8	*1025 STL.	
86102-7	1/4	.306 .316	7/8	2S-1/2 H. ALUM.	
86102-8	1/2	.431 .437	15/16	*1025 STL.	
86102-9	1/2	.302 .306	1 1/16	*1025 STL.	
86102-10	5/8	.495 .500	2	*1025 STL.	
86102-11	3/8	.308 .313	1/4	*1025 STL.	
86102-12	1/4	.183 .188	1/2	*1025 STL.	
86102-13	1/2	.495 .500	1 1/16	*1025 STL.	
86102-14	1/2	.495 .500	1 3/16	*1025 STL.	
86102-15	5/16	.245 .250	3/4	*1025 STL.	
86102-16	5/16	.191	5/8	*1025 STL.	
86102-17	.375 .385	.370 .375	.565 .595	C.F. STL.	BURR I.D. & O.D.
86102-18	3/16	.120 .125	1/4	*1025 STL.	
86102-19	5/8	.495 .500	3/4	C.R. STL.	
86102-20	1/2	.495 .505	2 1/4	*1025 STL.	CODE NO. 107 330
86102-21	9/16	.433 .438	1 7/16	*1025 STL.	CODE NO. 107 372
86102-22	3/8	.308 .313	5/8	*1025 STL.	
86102-23	5/8	.495 .500	1 1/2	*1025 SST	
86102-24	7/16	.370 .375	1 13/16	*1025 STL.	
86102-25	5/16	.245 .250	1 1/4	*1025 STL.	
86102-26	1 5/8	1.607 1.610	1 13/16	*1025 STL.	
86102-27	1/4	.183 .188	9/32	*1025 STL.	
86102-28	5/16	.245 .250	1	*1025 STL.	

PART NO	O.D.	I.D.	L	MAT'L	REMARKS
86102-29	3/8	.312 .317	.938	*1025 STL.	
86102-30	.373 .378	.245 .250	.285	*1025 STL	
86102-31	.504 .505	.367 .372	.190	*1025 STL.	
86102-32	5/16	.183 .188	7/8	*1025 STL.	
86102-33	3/8	.245 .250	5/8	*1025 STL.	
86102-34	7/16	.308 .313	5/8	*1025 STL.	
86102-35	5/8	.313	9/16	C.R. STL.	
86102-36	3/8	.244 .249	15/16	*1025 STL.	
86102-37	7/16	.358 .363	3/8	*1025 STL.	
86102-38	7/16	.358 .363	7/8	*1025 STL.	
86102-39	3/8	.242 .247	1 1/16	*1025 STL.	
86102-40	1 3/4	1.745 1.750	1/4	1025 SST	
86102-41	7/8	.770 .775	3/4	*1025 SST	
86102-42	3/8	.308 .313	1 13/16	*1025 STL.	
86102-43	1/4	.183 .188	.750	*1025 STL.	
86102-44	1/2	.371 .376	1 1/4	*1025 SST	
86102-45	1/4 .092	—	7/8	2S-0 ALUM.	
86102-46	7/8	.757 .763	1.000	*1025 SST	
86102-47	3/8	.531 .536	.531	*1025 SST	
86102-48	3/8	.183 .188	.656	* 1025 STL.	
86102-49	.313	.245 .250	1/4	HARD FIBER	REMOVE SHARP CORNERS
86102-50	7/16	.370 .375	1 7/8	*1025 STL.	
86102-51	5/16	.181 .185	1 1/4	*1025 STL.	
86102-52	1/2 .495	—	4	*4130 SST	
86102-53	5/8 .620	—	1/4	*1025 STL.	
86102-54	5/8	.313	3/4	*1025 STL.	
86102-55	9/16	.310	1 1/8	*1025 STL.	
86102-56	1/2	.370 .375	2 1/4	*1025 STL.	
86102-57	5/16	.245 .250	1 1/16	*1025 STL.	
86102-58	3/4	.745 .750	1.	HARD FIBER	
86102-59	7/16	.370 .375	1/4	STEEL	

PART NO.	O.D.	I.D.	L	MAT'L	REMARKS
86102-60	.255 .250	.193 .195	.219	STL.	
86102-61	2.035	—	1/2	ST. STL. TYPE 347 ANNEALED 2D FIN.	
86102-62	3/4	.312 .318	3/8	2S-0 ALUM.	
86102-63	1 3/8	1.310	1 1/4	*4130 STEEL	
86102-64	1.255 1.250	.313 .318	.375	GRAFITEX PURCH. ENTIRE CORP.	BURR I.D., WAS 108-861000
86102-65	1/16 .065	—	11/32	*1025 STL.	
86102-66	1/16 .065	—	29/32	*1025 STL.	
86102-67	1	.905 .907	1.313	*4130 STL.	
86102-68	1	.905 .907	1.686	*4130 STL.	
86102-69	7/16	.301 .306	1 5/8	*1025 STL.	
86102-70	7/16	.301 .306	2	*1025 STL.	
86102-71	1.049	—	5 1/2	*4130 STL.	
86102-72	1/2 .093	—	1 3/4	*1025 STL.	
86102-73	7/16	.307 .312	7/8	*1025 STL.	
86102-74	7/16	.307 .312	1 1/2	*1025 STL.	
86102-75	7/16	.313	3/8	*1025 STL.	
86102-76	1/2	.191	29/32	2S-0 ALUM.	
86102-77	.106 .106	.097 .102	.110	*1025 STL.	
86102-78	1/2	.191	.281	*1025 STL.	
86102-79	7/8	.746 .751	1/2	*1025 STL.	
86102-80	5/16	.184 .189	1 7/16	*1025 STL.	
86102-81	7/16	.301 .306	1	*1025 STL.	
86102-82	1/2	.166	.188	*1025 STL.	
86102-83	.313 .308	.250 .254	1/2	*1025 STL.	
86102-84	7/8	.746	1	*1025 STL.	
86102-85	1/8 .065	—	1/4	*1025 STL.	
86102-86	1/8 .058	—	1	*4130 STL.	
86102-87	1/2	.367 .372	2	*1025 STL.	
86102-88	7/16	.370 .375	1 1/16	*1025 STL.	
86102-89	7/16	.301 .306	15/16	*1025 STL.	

LET.	REVISION	DATED	BY
BC	-88 & -89 ADDED	8-9-50	J.C.K.
BB	-87 ADDED	7-5-50	C.K.
BA	1/8 -.058 4130 STL. WAS 1/8 -.065 *1025 STL.	5-2-50	C.K.
AZ	-84, -85 & -86 ADDED	3-1-50	H.R.K.
AY	-83 ADDED	1-26-50	K.D.
AX	-82 ADDED	1-9-50	K.D.
AW	-79, -80 & -81 ADDED	12-29-49	K.D.
AV	I.D. ON -67 & -68 WAS .905 .910	12-20-49	M.G.
AU	I.D. ON -67 & -68 WAS 1 3/16 & 1 7/16 RESP.	11-21-49	H.R.K.
AT	-78 ADDED	10-21-49	H.K.
AS	-77 ADDED	10-7-49	R.R.
AR	WAS 1/16 .064 & 7/16 FOR -66 *4130 STEEL WAS *1025 STEEL PARTS	10-5-49	R.R.
AQ	-63, -64, -65, -66, -67, -68, -69, -70, -71, -72, -73, -74, -75, -76 ADDED	7-8-49	R.D.R.
AP	-62 ADDED	6-30-49	R.M.
AO	-61 ADDED	6-14-49	C.M.
AN	-52 L WAS 2	5-14-49	C.M.
AM	REDRAWN & REVISED	3-4-49	R.D.
LET.	REVISION	DATE	BY

SEE ALSO DWG'S. 80012
80022 & 82732

MODEL	PER PLANE	NEXT ASSEMBLY	SUPERSEDES	SUP. BY

THIS DRAWING IS THE PROPERTY OF THE PIPER AIRCRAFT CORP. AND ITS POSSESSION BY UNAUTHORIZED PERSONS SHALL NOT BE CONSTRUED AS PERMISSION TO REPRODUCE FOR SALE, IN WHOLE OR IN PART. ANY VIOLATION SHALL BE PROSECUTED.

PIPER AIRCRAFT CORP.
LOCK HAVEN, PENNA.

NOTED

PART NO.	No. REQ.	MATERIAL

SCALE — TOTAL WT.—LBS.
FINISH—PIPER SPECIFICATION #10
MANUFACTURING PRACTICES—PIPER SPECIFICATION #9

BUSHINGS
(SHEET 4)

R.L.M.		
10-21-49		
DRAFTSMAN	CHECKED	STANDARDS

86102

A690

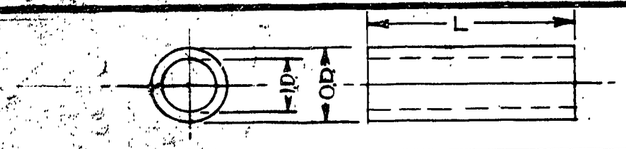

PART NO.	O.D.	I.D.	L	MAT'L	REMARKS
86102-2	.250	.190 .195	.344	*1025 STL.	
86102-3	.375	.310 .315	3/4	*1025 STL.	
86102-4	.433	.313 .316	1 1/8	*1025 STL.	
86102-5	1/4	.135	L	2S-1/2 H. ALUM.	
86102-6	.250	.164 .169	1/8	*1025 STL.	
86102-7	1/4	.196 .196	7/8	2S-1/2 H. ALUM.	
86102-8	1/2	.431 .437	15/16	*1025 STL.	
86102-9	1/2	.362 .366	1 1/16	*1025 STL.	
86102-10	5/8	.495 .500	2	*1025 STL.	
86102-11	3/8	.306 .310	1/4	*1025 STL.	
86102-12	1/4	.196 .196	1/2	*1025 STL.	
86102-13	1/2	.431 .437	1 1/16	*1025 STL.	
86102-14	1/2	.431 .437	1 3/16	*1025 STL.	
86102-15	5/16	.243 .247	3/4	*1025 STL.	
86102-16	5/16	.191	5/8	*1025 STL.	
86102-17	.815 .810	.375 .378	.565 .559	C.F. STL.	BURR I.D. & O.D.
86102-18	5/16	.243 .247	1/4	*1025 STL.	
86102-19	5/8	.495 .500	3/4	C.R. STL.	
86102-20	1/2	.426 .425	2 1/4	*1025 STL.	CODE NO. 107 330
86102-21	3/16	.118 .120	1 7/16	*1025 STL.	CODE NO. 107 372
86102-22	3/8	.306 .310	5/8	*1025 STL.	
86102-23	5/8	.495 .500	1 1/2	*1025 SST	
86102-24	7/16	.368 .372	1 5/16	*1025 STL.	
86102-25	5/16	.247 .251	1 1/4	*1025 STL.	
86102-26	1 5/8	1.310 1.307	1 13/16	*1025 STL.	
86102-27	1/4	.196 .196	9/32	*1025 STL.	
86102-28	5/16	.243 .247	1	*1025 STL.	

PART NO	O.D.	I.D.	L	MAT'L	REMARKS
86102-29	3/8	.312 .317	.938	*1025 STL.	
86102-30	.379 .375	.245 .250	.285	*1025 STL	
86102-31	.504 .500	.367 .372	.190	*1025 STL.	
86102-32	5/16	.122 .125	7/8	*1025 STL.	
86102-33	3/8	.306 .310	5/8	*1025 STL.	
86102-34	7/16	.368 .372	5/8	*1025 STL.	
86102-35	5/8	.313	9/16	C.R. STL.	
86102-36	3/8	.306 .310	15/16	*1025 STL.	
86102-37	7/16	.375 .380	3/8	*1025 STL.	
86102-38	7/16	.375 .380	7/8	*1025 STL.	
86102-39	3/8	.306 .310	1 1/16	*1025 STL.	
86102-40	1 3/4	.496 .500	1/4	*1025 SST	
86102-41	7/8	.760 .776	3/4	*1025 SST	
86102-42	3/8	.306 .310	1 13/16	*1025 STL.	
86102-43	1/4	.196 .196	.750	*1025 STL.	
86102-44	1/2	.371 .375	1 1/4	*1025 SST	
86102-45	1/8 .058	—	7/8	2S-0 ALUM TW	
86102-46	7/8	.757 .763	1.000	*1025 SST.	
86102-47	3/8	.306 .310	.531	*1025 SST	
86102-48	3/8	.306 .310	.656	*1025 STL.	
86102-49	.313	.191 .196	1/4	HARD FIBER	REMOVE SHARP CORNERS
86102-50	7/16	.368 .372	1 1/8	*1025 STL.	
86102-51	5/16	.184 .185	1 1/4	*1025 STL.	
86102-52	3/4 .745	—	4	*4130 SST	
86102-53	1/8 .058	—	1/4	*1025 STL.	
86102-54	5/8	.313	3/4	*1025 STL.	
86102-55	9/16	.310	1 1/8	*1025 STL.	
86102-56	1/2	.371 .375	2 1/4	*1025 STL	
86102-57	5/16	.243 .247	1 1/16	*1025 STL	
86102-58	3/4	.615	1	HARD FIBER	
86102-59	7/16	.368 .372	1/4	STEEL	

PART NO.	O.D.	I.D.	L	MAT'L	REMARKS
86102-60	.255 .250	.195 .192	.219	STL.	
86102-61	2.035	—	1/2	ST. STL. TYPE 347, ANNEALED 2D FIN.	
86102-62	3/4	.312 .318	3/8	2S-0 ALUM.	
86102-63	1 3/8	1.310	1 1/4	*4130 STEEL	
86102-64	1.255 1.250	.375 .378	.375	CRESATEX PURPLE GATKE CORP.	BURR I.D., WAS 108-86-11000
86102-65	1/16 .065	—	11/32	*1025 STL.	
86102-66	1/16 .065	—	23/32	*1025 STL.	
86102-67	1	.905 .907	1.313	*4130 STL.	
86102-68	1	.905 .907	1.688	*4130 STL.	
86102-69	7/16	.381 .385	1 5/8	*1025 STL.	
86102-70	7/16	.381 .385	2	*1025 STL.	
86102-71	1.049	—	5 1/2	*4130 STL.	
86102-72	1/2 .093	—	1 1/4	*1025 STL.	
86102-73	7/16	.307 .312	7/8	*1025 STL.	
86102-74	7/16	.307 .312	1 1/2	*1025 STL.	
86102-75	7/16	.313	3/8	*1025 STL.	
86102-76	1/2	.191	23/32	2S-0 ALUM.	
86102-77	.188 .186	.097 .102	.110	*1025 STL.	
86102-78	1/2	.191	.281	*1025 STL.	
86102-79	7/8	.746 .751	1/2	*1025 STL.	
86102-80	5/16	.184 .185	1 1/16	*1025 STL.	
86102-81	7/16	.381 .385	1	*1025 STL.	
86102-82	1/2	.166	.188	*1025 STL.	
86102-83	.315 .308	.255 .254	1/2	*1025 STL.	
86102-84	1/8	.097 .102	1	*1025 STL.	
86102-85	1/8 .065	—	1/4	*1025 STL.	
86102-86	1/8 .058	—	1	*4130 STL.	
86102-87	1/2	.377 .375	2	*1025 STL.	
86102-88	7/16	.376 .375	1 11/16	*1025 STL.	
86102-89	7/16	.381 .385	9/16	*1025 STL.	

LET	REVISION	DATED	BY
BB	-87 ADDED	7-5-50	C.K.
BA	1/8 -.058 4130 STL WAS 1/8 -.065 *1025 REQ'D	7-5-50	C.K.
AZ	-84, -85 & -86 ADDED	3-1-50	H.R.K.
AY	-83 ADDED	1-26-50	K.D.
AX	-82 ADDED	1-9-50	K.D.
AW	-79, -80 & -81 ADDED	12-29-49	K.D.
AV	I.D. ON -67 & -68 WAS .905/.910	12-20-49	M.G.
AU	LGTH -67 & -68 WAS 1 5/8 & 1 7/16 RESP.	11-21-49	H.R.K.
AT	-78 ADDED	10-21-49	H.K.
AS	-77 ADDED	10-7-49	R.R.
AR	LGTH WAS .778 FOR -66 ALSO STEEL WAS *1025 STEEL REQ'D	10-5-49	R.R.
AQ	-63-64, -65-66, -67-68, -69-70 -71-72, -73-74, -75-76 ADDED	7-8-49	R.D.R.
AP	-62 ADDED	6-30-49	R.M.
AO	-61 ADDED	6-14-49	C.K.
AN	-52 L WAS 2	5-14-49	R.M.
AM	REDRAWN & NEW NOTES	5-4-49	R.R.
BC	-88 & -89 ADDED	2-9-50	C.R.

SEE ALSO DWG'S 80012
80022 & 82732

NOTED

PART No.	No. REQ.	MATERIAL
SCALE		TOTAL WT.—LBS.

FINISH—PIPER SPECIFICATION #10
MANUFACTURING PRACTICES—PIPER SPECIFICATION #0

MODEL PER PLANE	NEXT ASSEMBLY	SUPERSEDES	SUP. BY

THIS DRAWING IS THE PROPERTY OF THE PIPER AIRCRAFT CORP. AND ITS POSSESSION BY UNAUTHORIZED PERSONS SHALL NOT BE CONSTRUED AS PERMISSION TO REPRODUCE FOR SALE, IN WHOLE OR IN PART, ANY DEVICES SHOWN THEREON.

PIPER AIRCRAFT CORP.
LOCK HAVEN, PENNA.

BUSHINGS
(SHEET 4)

R.L.M.		
10-8-49		
DRAFTSMAN	CHECKER	STANDARDS

86102

A690

This page intentionally left blank.

LAYOUT L4X70019, L4X70021, L4X20188

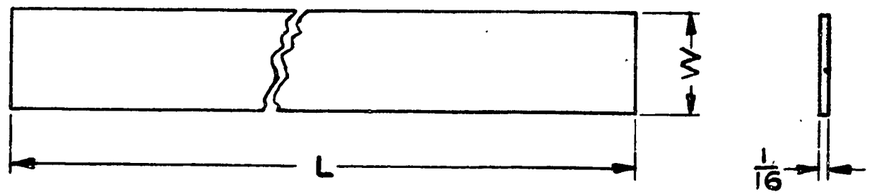

B

PART NO.	L	W	MODEL	NEXT ASSY	PER PLANE	TOTAL WT. IN LBS.
90150-2	4½	3/4	J5C	10421	2	
90150-3	7	3/4				
90150-4	6	3/4				
90150-5	3½	1				
90150-6	6	1				
90150-7	4	9/16				

LET.	REVISION	DATE	BY
D	-7 ADDED	9-11-46	D.C.
C	-5 & -6 ADDED	11-6-46	L.R.
B	ON -2 J5C N.A. 10421 WAS 10130	1-9-46	B.P.C.
A	W" TABULATION ADDED	1-4-45	J.S.T.

MODEL	PER PLANE	NEXT ASSEMBLY	SUPERSEDES	SUP. BY

PIPER AIRCRAFT CORP.
LOCK HAVEN, PENNA.

PART NO.	NO. REQ.	SIZE	MATERIAL
		1/16 XNOTED	HARD FIBRE
			DESCRIPTION

SCALE FULL SIZE — TOTAL WT.—LBS.

FINISH—PIPER SPECIFICATION #10

MANUFACTURING PRACTICES—PIPER SPECIFICATION #9

STRIP - FIBRE

DRAFTSMAN	CHECKER	STANDARDS
J.E.H. 10-10-44	C.R.D. 10-17-44	

90150

A691

A691

LAYOUT L4X10035 A

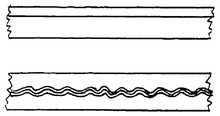

FIG. 1
FULL SIZE

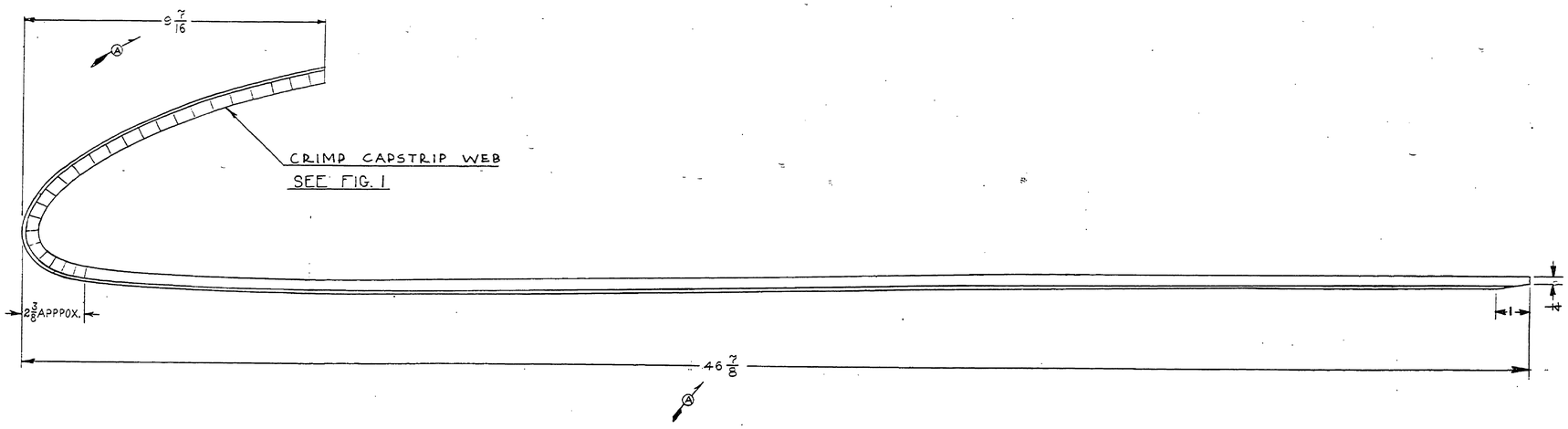

NOTE:

1. FOR CAPSTRIP CONTOUR SEE DRAWING 13814.

				RIB OUTLINE 13814	
				59 LONG	PIPER SECTION 847
PART NO.	NO. REQ.	SIZE	DESCRIPTION. MATERIAL		
SCALE-6 IN = 1 FT. & NOTED			TOTAL WT-LBS. .113		
FINISH-PIPER SPECIFICATION #10					
MANUFACTURING PRACTICES-PIPER SPECIFICATION #9					

CAPSTRIP-
WING RIB

LIT	REVISION	DATE	BY
C	NEXT ASSYS 90456, 90517 REMOVED	4-17-45	C.E.K.
B	13814 WAS 90479, 59 WAS 82 3/4	4-17-45	C.E.K.
A	9 7/16 WAS 5 19/32, 46 7/8 WAS 45 23/32	4-17-45	C.E.K.

L-14 4 90518

MODEL PER PLANE | NEXT ASSEMBLY | SUPERSEDES | SUP. BY

PIPER AIRCRAFT CORP.
LOCK HAVEN, PENNA.

TOOLS	H.N.K.	
11-2-44	1-22-45	
DRAFTSMAN	CH. ECKER	STANDARDS

90458

A884

LAYOUT L-4X10035

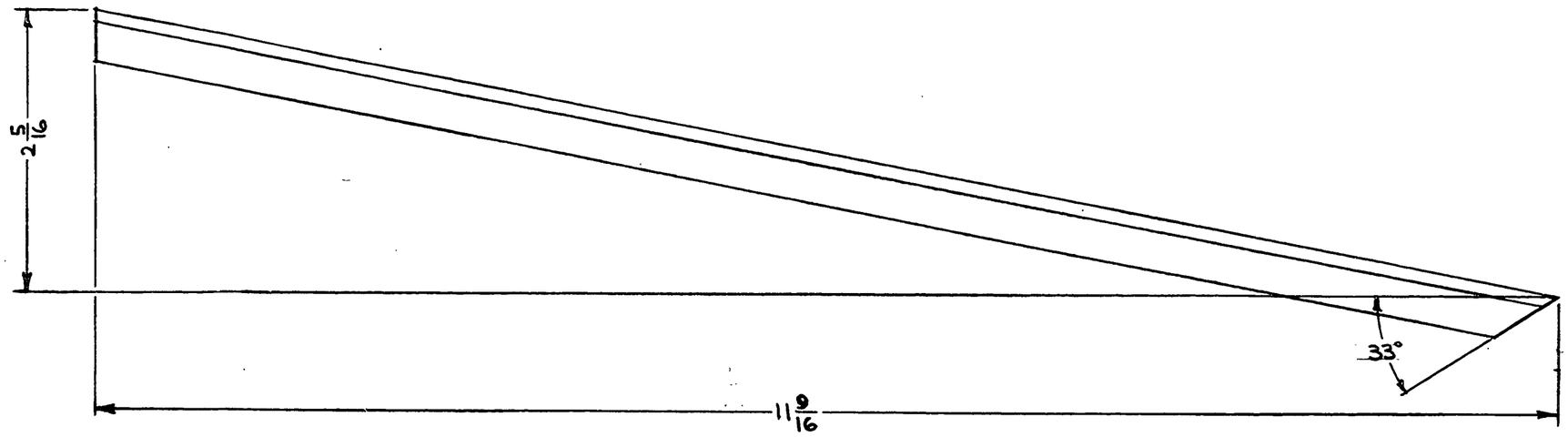

NOTE:

1. FOR RIB OUTLINE SEE DRAWING 90479.

LET.	REVISION	DATE	BY
A	NEXT ASSYS 90466, 90517 REMOVED	4-18-45	C.E.K.

MODEL	PER PLANE	NEXT ASSEMBLY	SUPERSEDES	SUP. BY
L-14	4	90518		

PIPER AIRCRAFT CORP.
LOCK HAVEN, PENNA.

RIB OUTLINE 90479
11 3/16 L. PIPER SECTION 84771
PART NO. | NO. REQ. | SIZE | DESCRIPTION | MATERIAL

SCALE FULL SIZE | TOTAL WT.-LBS. .024

FINISH—PIPER SPECIFICATION #10

MANUFACTURING PRACTICES—PIPER SPECIFICATION #9

CAPSTRIP-WING RIB

A

DRAFTSMAN	CHECKER	STANDARDS
F.TORE 11-2-44	W.R.K. 1-19-45	

90459

A692

LAYOUT L4X10004, L4X10006, L4X10035, L4X10032, L4X10003

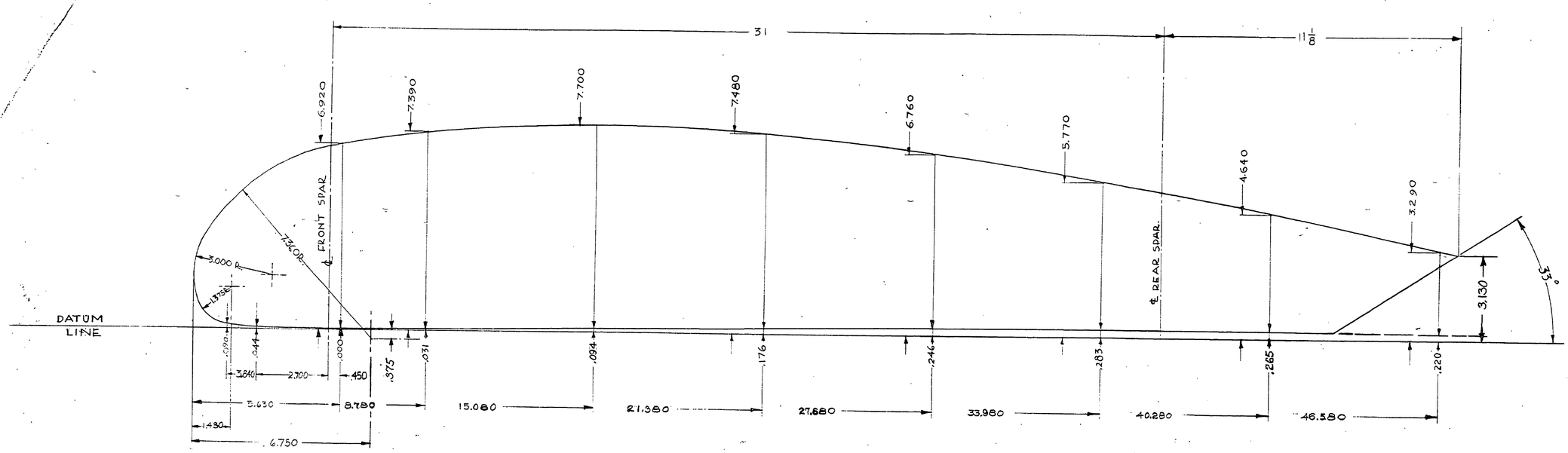

						90523, 90524		
						90519, 90522		
						90468, 90475		
						90520, 90465		
						90461, 90521		
				L-14	—	90453, 90458		
				MODEL	FOR PLANE	NEXT ASSEMBLY	SUPERSEDES	SUP. BY
A	NEXT ASSYS 90466, 90462, 90463 ISSUED	4-18-46	C.E.K.	PIPER AIRCRAFT CORP. LOCK HAVEN, PENNA.				
LET.	REVISION	DATE	BY					

PART NO.	NO. REQ.	MATERIAL
SCALE-6 IN = 1 FT.		TOTAL WT.-LBS.

FINISH: PIPER SPECIFICATION #10

MANUFACTURING PRACTICES- PIPER SPECIFICATION #9

RIB OUTLINE - WING.

FIORE	H.R.K.		
10-31-44	1-18-45		90479
DRAFTSMAN	CHECKER	STANDARDS	

A885

LAYOUT L4X70070, L4X70071

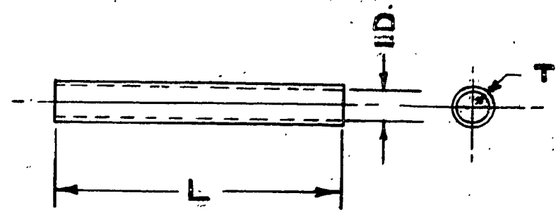

PART NO.	I.D.	T	L	WT. LBS.	MODEL	PER PLANE	NEXT ASSEMBLY
90797-2	.148	.016	3/4	.00033	J5C	16	10128
90797-3	.166	.016	3/4	.0005	J5C	16	10128
					J3	6	10289
90797-4	.234	.020	1	.00075	J5C	10	10128
90797-5	.148	.016	2 1/4	.001	J5C	3	10128
90797-6	.166	.016	2 1/4	.0015			
90797-7	.438	.025	1	.			
90797-8	.234	.020	3	.002			
90797-9	.166	.016	3	.002			
90797-10	.234	.020	1/2	.00075	J5C	1	24186
90797-11	.234	.020	1 5/8				
90797-12	.148	.016	48				
90797-13	.148	.016	6				
90797-14	.148	.016	30				
90797-15	.166	.016	45				
90797-16	.166	.016	99				
90797-17	.234	.020	1 3/8				

LET.	REVISION	DATE	BY
M	-17 ADDED	5-18-51	LEM
L	-15 & -16 ADDED	7-21-50	K.D.
K	-14 ADDED	9-1-49	CK
J	-13 ADDED	3/14/49	DC
H	-12 ADDED	3-9-48	HK
G	-11 ADDED	9-17-47	L.K.
F	10 OF -4 FOR J5C WAS 6	9-5-46	J.H.
E	16 OF -3 FOR J5C WAS 20	9-5-46	J.H.
D	REDRAWN & REVISED	6-17-46	LBB

THIS DRAWING IS THE PROPERTY OF THE PIPER AIRCRAFT CORP. AND ITS POSSESSION BY UNAUTHORIZED PERSONS SHALL NOT BE CONSTRUED AS PERMISSION TO REPRODUCE FOR SALE, IN WHOLE OR IN PART, ANY DEVICES SHOWN THEREON.

MODEL	PER PLANE	NEXT ASSEMBLY	SUPERSEDES	SUP. BY
NOTED		NOTED		

PIPER AIRCRAFT CORP.
LOCK HAVEN, PENNA.

PART NO.	NO. REQ.	SIZE	DESCRIPTION
			NOTED "TRANSFLEX" TRANSPARENT PLASTIC TUBING PURCHASED IRVINGTON VARNISH & INSULATING CO OR EQUIVALENT
			MATERIAL

SCALE — TOTAL WT.—LBS. NOTED

FINISH—PIPER SPECIFICATION #10

MANUFACTURING PRACTICES—PIPER SPECIFICATION #9

SLEEVE-INSULATING

I.D.B.	E.E.T.		
6-17-46	6-18-46		
DRAFTSMAN	CHECKER	STANDARDS	90797

A693

LAYOUT L4X70070, L4X70071

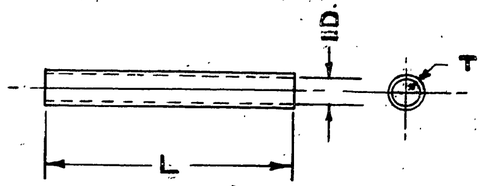

PART NO.	I.D.	T	L	WT. LBS.	MODEL	PER PLANE	NEXT ASSEMBLY
90797-2	.148	.016	3/4	.00033	J5C	16	10128
90797-3	.166	.016	3/4	.0005	J5C	16	10128
					J3	6	10289
90797-4	.234	.020	1	.00075	J5C	10	10128
90797-5	.148	.016	2 1/4	.001	J5C	3	10128
90797-6	.166	.016	2 1/4	.0015			
90797-7	.438	.025	1	.			
90797-8	.234	.020	3	.002			
90797-9	.166	.016	3	.002			
90797-10	.234	.020	1/2	.00075	J3C		24136
90797-11	.234	.020	1 5/8				
90797-12	.148	.016	48				
90797-13	.148	.016	6				
90797-14	.148	.016	30				
90797-15	.166	.016	45				
90797-16	.166	.016	99				
90797-17	.234	.020	1 3/8				

LET.	REVISION	DATE	BY
M	-17 ADDED	5-18-51	L.E.M.
L	-15 & -16 ADDED	7-21-50	K.D.
K	-14 ADDED	9-1-49	C.K.
J	-13 ADDED	3/4-49	D.C.
H	-12 ADDED	3-9-48	H.K.
G	-11 ADDED	9-17-47	L.K.
F	10 OF -4 FOR J5C WAS 6	9-5-46	J.H.
E	16 OF -3 FOR J5C WAS 20	9-5-46	J.H.
D	RE-DRAWN & REVISED	6-17-46	J.H.

THIS DRAWING IS THE PROPERTY OF THE PIPER AIRCRAFT CORP. AND ITS POSSESSION BY UNAUTHORIZED PERSONS SHALL NOT BE CONSTRUED AS PERMISSION TO REPRODUCE FOR SALE, IN WHOLE OR IN PART, ANY DEVICES SHOWN THEREON.

MODEL	PER PLANE	NEXT ASSEMBLY	SUPERSEDES	SUP. BY
NOTED	NOTED	NOTED		

PIPER AIRCRAFT CORP.
LOCK HAVEN, PENNA.

NOTED "TRANSFLEX" TRANSPARENT PLASTIC TUBING PURCHASED IRVINGTON VARNISH & INSULATING CO OR EQUIVALENT

PART NO. | NO. REQ. | SIZE | DESCRIPTION

MATERIAL

SCALE | TOTAL WT.-LBS. NOTED

FINISH—PIPER SPECIFICATION #10

MANUFACTURING PRACTICES—PIPER SPECIFICATION #0

SLEEVE-INSULATING

I.D.B.	E.E.T.		
6-21-46	6-15-46		
DRAFTSMAN	CHECKER	STANDARDS	

90797

A693

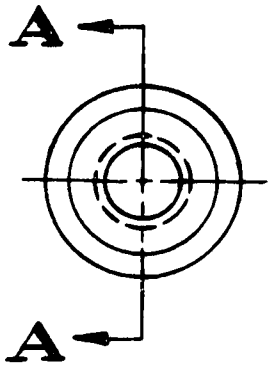

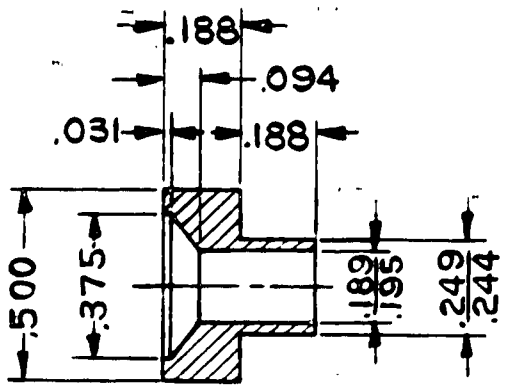

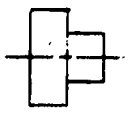

ACTUAL SIZE

SECTION A-A

B

		½ DIA. X 7/16 LG.	C.F. STEEL
	No. REQ.	SIZE	DESCRIPTION
PART No.		MATERIAL	

SCALE TWICE SIZE & NOTED | TOTAL WT.—LBS.

FINISH—PIPER SPECIFICATION #10

MANUFACTURING PRACTICES—PIPER SPECIFICATION #9

FITTING - SWIVEL

MODEL	PER PLANE	NEXT ASSEMBLY	SUPERSEDES	SUP. BY
J5C	2	75286		
L-18	1	90800		

LET.	REVISION	DATE	BY
B	C.F. STEEL WAS #1025 STEEL	4-15-46	C.E.K.
A	J5C MODEL REF. ADDED	4-9-46	C.E.K.

PIPER AIRCRAFT CORP.
LOCK HAVEN, PENNA.

DRAFTSMAN	CHECKER	STANDARDS
J. HORNING 2-17-45	C.R.D. 2-19-45	

91193

PENCILTEX A. B. SMITH CO., PGH., PA.

3.99

A399